GREE
Change for Life

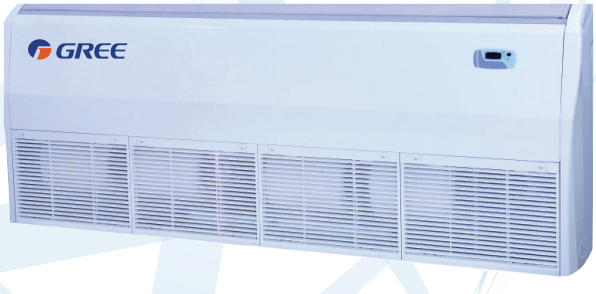

Floor Ceiling Type Fan Coil Unit Service Manual

(GC201409-I)

GREE ELECTRIC APPLIANCES, INC.OF ZHUHAI

CONTENTS

PRODUCT 2

1 Models list 2

2 Nomenclature of the unit 3

3 Function 3

4 Specification 4

5 Working principle 10

CONTROL 12

1 Unit control 12

2 Wireless remote controller -Y512 13

3 Wireless remote controller -YB1FA 16

INSTALLATION 20

1 Dimension data 20

2 Selection of installation location 22

3 There are 2 styles of installation 22

5 Drain piping work 24

6 Motorized valve 25

7 Evakyation of the perfirmance 26

8 Check after installation 27

MAINTENANCE 29

1 Error code 29

2 Troubleshooting 29

3 Power distribution 30

4 Wiring diagram 30

5 Disassembly of key spare part 32

6 Exploded view and spare parts list 36

PRODUCT

PRODUCT

1 Models list

Model Name	Product Code	Cooling/Heating Capacity (W)	Power Supply (V, Ph, Hz)	Remarks
FP-34WM-K	EM51700070	1800/2800	220-240V~ 50Hz	
FP-51WM-K	EM51700080	2800/4150		
FP-68WM-K	EM51700020	3600/5400		
FP-85WM-K	EM51700050	4500/6800		
FP-102 WM-K	EM51700060	5400/8100		
FP-136WM-K	EM51700010	7200/10800		
FP-170WM-K	EM51700040	8600/13500		
FP-204WM-K	EM51700030	9700/16200		

Model Name	Product Code	Cooling/Heating Capacity (W)	Power Supply (V, Ph, Hz)	Remarks
FP-34WM-D	EM51700090	2000/3510	208-230V~ 60Hz	
FP-51WM-D	EM51700100	2800/4850		
FP-68WM-D	EM51700110	4000/6500		
FP-85WM-D	EM51700120	5170/8100		
FP-102WM-D	EM51700130	5680/9200		
FP-136WM-D	EM51700140	7050/10600		
FP-170WM-D	EM51700150	9000/14500		
FP-204WM-D	EM51700160	9700/15900		

Model Name	Product Code	Cooling/Heating Capacity (W)	Power Supply (V, Ph, Hz)	Remarks
FP-34ZD-K	EM56000100	2000/6700	220-240V~ 50Hz	
FP-51ZD-K	EM56000110	2800/7600		
FP-68ZD-K	EM56000130	3600/8500		
FP-85ZD-K	EM56000120	4200/9500		
FP-102ZD-K	EM56000140	5400/12600		
FP-136ZD-K	EM56000150	6350/13700		
FP-170ZD-K	EM56000160	8900/19000		
FP-204ZD-K	EM56000170	9900/21000		

2 Nomenclature of the unit

FP	-	□	□	-	D
1		2	3		4

NO.	Description	Options
1	Fan coil	Fan coil unit
2	Air flow volume	Number×10 m^3/h
3	Installation Type	WM-Floor and ceiling type ZD-Floor and ceiling type
4	Power supply	K-220-240V~ 50Hz;D-208-230V~ 60Hz

FP-68WM-k:Floor ceiling fan coil unit with a nominal airflow volume of 680m^3/h.

Note: face the air inlet of the unit, it is left type (“Z” for short) when the water in/outlet pipe is on the left side of the unit, otherwise is right side, “Y” for short.

3 Function

Novel pattern: the exposed skin plates of unit look so elegant and luxurious that they can be taken as the indoor decorations.

- Low noise: Dynamic principles have been adopted for the design of the fan blades so as to make sure the air volume is enough and running noise is considerably low.
- Durable filter screen: The durable filter screen shares a cleaning cycle 20 times longer than that of the conventional filter screen, needless to clean it frequently.
- Microcomputer control: The unit is able to automatically adjust the fan speed in accordance with the indoor ambient temperature to meet a wide range of users’ requirements.
- Small height of the unit, saving much installation space.
- Large cooling (heating) capacity, low noise, three-speed motor which can adjust the air volume and meet a wide range of users’ requirements.
- Excellent material, stringent process control, which guarantee the hi-quality and long life of the unit.

4 Specification

Model			FP-34WM-K	FP-51WM-K	FP-68WM-K	FP-85WM-K
Code			EM51700070	EM51700080	EM51700020	EM51700050
Air flow volume	High	CFM	200	300	400	500
		m^3/h	340	510	680	850
	Medium	CFM	146	232	291	375
		m^3/h	248	395	495	638
	Low	CFM	125	155	194	250
		m^3/h	213	264	330	425
Capacity	Cooling	W	1800	2800	3600	4500
	Heating	W	2800	4150	5400	6800
Power system	Type	V-Ph-Hz	220-240V~ 50Hz	220-240V~ 50Hz	220-240V~ 50Hz	220-240V~ 50Hz
	Input	W	40	60	62	77
Exterior static pressure		Pa	0	0	0	0
Water system	Water flow volume	m^3/h	0.37	0.5	0.64	0.81
	Pressure drop	kPa	9.8	9.8	36.5	36.5
Coil	Type		Aluminum fin-copper tube	Aluminum fin-copper tube	Aluminum fin-copper tube	Aluminum fin-copper tube
	Operating pressure	MPa	≤1.6MPa	≤1.6MPa	≤1.6MPa	≤1.6MPa
Motor	Type		Isolation B Capacitor startup three-speed Motor	Isolation B Capacitor startup three-speed Motor	Isolation B Capacitor startup three-speed Motor	Isolation B Capacitor startup three-speed Motor
	Capacitor	μF	1.5	1.5	3	3
Sound pressure level	Sound pressure level	dB(A)	48	48	49	49
Connection pipe size	Water inlet &outlet	inch	3/4(inner groove)	3/4(inner groove)	3/4(inner groove)	3/4(inner groove)
	Condensing water drain	inch	3/4(outer groove)	3/4(outer groove)	3/4(outer groove)	3/4(outer groove)
Outline dimension (W × D × H)		mm	834×238×694	834×238×694	1300×188×600	1300×188×600
Package dimension (W × D × H)		mm	960×330×830	960×330×830	1414×248×724	1414×248×724
Net weight		kg	26	26	34	34
Gross weight		kg	35	35	38	38
Loading quantity		20'GP	112	112	108	108
		40'GP	224	224	220	220
		40'HQ	267	267	244	244
Wireless remote controller			Y512	Y512	Y512	Y512

Model			FP-102WM-K	FP-136WM-K	FP-170WM-K	FP-204WM-K
Code			EM51700060	EM51700010	EM51700040	EM51700030
Air flow volume	High	CFM	600	800	1000	1200
		m^3/h	1020	1360	1700	2040
	Medium	CFM	464	644	750	926
		m^3/h	789	1095	1276	1575
	Low	CFM	309	429	500	618
		m^3/h	525	730	850	1051
Capacity	Cooling	W	5680	7050	8600	9700
	Heating	W	9200	10600	13500	16200
Power system	Type	V-Ph-Hz	220-240V~ 50Hz	220-240V~ 50Hz	220-240V~ 50Hz	220-240V~ 50Hz
	Input	W	99	162	162	198
Exterior static pressure		Pa	0	0	0	0
Water system	Water flow volume	m^3/h	0.94	1.32	1.52	1.97
	Pressure drop	kPa	30.8	34.8	38.4	42.8
Coil	Type		Aluminum fin-copper tube	Aluminum fin-copper tube	Aluminum fin-copper tube	Aluminum fin-copper tube
	Operating pressure	MPa	≤1.6MPa	≤1.6MPa	≤1.6MPa	≤1.6MPa
Motor	Type		Isolation B Capacitor startup three-speed Motor	Isolation B Capacitor startup three-speed Motor	Isolation B Capacitor startup three-speed Motor	Isolation B Capacitor startup three-speed Motor
	Capacitor	μF	3	5	5	10
Sound pressure level	Sound pressure level	dB(A)	49	51	52	55
Connection pipe size	Water inlet &outlet	inch	3/4(inner groove)	3/4(inner groove)	3/4(inner groove)	3/4(inner groove)
	Condensing water drain	inch	3/4(outer groove)	3/4(outer groove)	3/4(outer groove)	3/4(outer groove)
Outline dimension (W × D × H)		mm	1300×188×600	1590×238×695	1590×238×695	1590×238×695
Package dimension (W × D × H)		mm	1414×248×724	1714×330×830	1714×330×830	1714×330×830
Net weight		kg	34	48.5	48.5	48.5
Gross weight		kg	38	57	57	57
Loading quantity		20'GP	108	58	58	58
		40'GP	220	111	111	111
		40'HQ	244	117	117	117
Wireless remote controller			Y512	Y512	Y512	Y512

Model			FP-34WM-D	FP-51WM-D	FP-68WM-D	FP-85WM-D
Code			EM51700090	EM51700100	EM51700110	EM51700120
Air flow volume	High	CFM	235	300	400	483
		m^3/h	400	510	680	820
	Medium	CFM	172	232	291	362
		m^3/h	292	395	495	615
	Low	CFM	147	155	194	241
		m^3/h	250	264	330	410
Capacity	Cooling	W	2000	2800	4000	5170
	Heating	W	3510	4850	6500	8100
Power system	Type	V-Ph-Hz	208-230V~ 60Hz	208-230V~ 60Hz	208-230V~ 60Hz	208-230V~ 60Hz
	Input	W	47	49	69	81
Exterior static pressure		Pa	0	0	0	0
Water system	Water flow volume	m^3/h	0.5	0.57	0.74	0.89
	Pressure drop	kPa	10	12	18	30
Coil	Type	-	Aluminum fin-copper tube	Aluminum fin-copper tube	Aluminum fin-copper tube	Aluminum fin-copper tube
	Operating pressure	MPa	≤1.6MPa	≤1.6MPa	≤1.6MPa	≤1.6MPa
Motor	Type	-	Isolation B Capacitor startup three-speed Motor	Isolation B Capacitor startup three-speed Motor	Isolation B Capacitor startup three-speed Motor	Isolation B Capacitor startup three-speed Motor
	Capacitor	μF	1	1	1.5	2.5
Sound pressure level	Sound pressure level	dB(A)	41	41	46	49
Connection pipe size	Water inlet &outlet	inch	3/4(inner groove)	3/4(inner groove)	3/4(inner groove)	3/4(inner groove)
	Condensing water drain	inch	3/4(outer groove)	3/4(outer groove)	3/4(outer groove)	3/4(outer groove)
Outline dimension (W × D × H)		mm	834×238×694	834×238×694	834×238×694	834×238×694
Package dimension (W × D × H)		mm	960×330×830	960×330×830	960×330×830	960×330×830
Net weight		kg	26	26	27	27
Gross weight		kg	33	33	34	34
Loading quantity		20'GP	112	112	112	112
		40'GP	224	224	224	224
		40'HQ	267	267	267	267
Wireless remote controller			YB1FA(XFAN)	YB1FA(XFAN)	YB1FA(XFAN)	YB1FA(XFAN)

Model			FP-102WM-D	FP-136WM-D	FP-170WM-D	FP-204WM-D
Code			EM51700130	EM51700140	EM51700150	EM51700160
Air flow volume	High	CFM	600	700	1000	1200
		m^3/h	1020	1190	1700	2040
	Medium	CFM	450	525	750	926
		m^3/h	765	892	1276	1575
	Low	CFM	300	350	500	618
		m^3/h	510	595	850	1051
Capacity	Cooling	W	5680	7050	9000	9700
	Heating	W	9200	10600	14500	15900
Power system	Type	V-Ph-Hz	208-230V~ 60Hz	208-230V~ 60Hz	208-230V~ 60Hz	208-230V~ 60Hz
	Input	W	99	103	165	215
Exterior static pressure		Pa	0	0	0	0
Water system	Water flow volume	m^3/h	0.93	1.15	1.55	1.66
	Pressure drop	kPa	50	55	55	55
Coil	Type	-	Aluminum fin-copper tube	Aluminum fin-copper tube	Aluminum fin-copper tube	Aluminum fin-copper tube
	Operating pressure	MPa	≤1.6MPa	≤1.6MPa	≤1.6MPa	≤1.6MPa
Motor	Type	-	Isolation B Capacitor startup three-speed Motor	Isolation B Capacitor startup three-speed Motor	Isolation B Capacitor startup three-speed Motor	Isolation B Capacitor startup three-speed Motor
	Capacitor	μF	3	3	5	6
Sound pressure level	Sound pressure level	dB(A)	51	51	48	50
Connection pipe size	Water inlet &outlet	inch	3/4(inner groove)	3/4(inner groove)	3/4(inner groove)	3/4(inner groove)
	Condensing water drain	inch	3/4(outer groove)	3/4(outer groove)	3/4(outer groove)	3/4(outer groove)
Outline dimension (W × D × H)		mm	1300×188×600	1300×188×600	1590×238×695	1590×238×695
Package dimension (W × D × H)		mm	1414×248×724	1414×248×724	1714×330×830	1714×330×830
Net weight		kg	31.5	32.5	48.5	48.5
Gross weight		kg	36.5	37.5	57	57
Loading quantity		20'GP	108	108	58	58
		40'GP	220	220	111	111
		40'HQ	244	244	117	117
Wireless remote controller			YB1FA(XFAN)	YB1FA(XFAN)	YB1FA(XFAN)	YB1FA(XFAN)

Note:

The water working temperature is from 7ºC (44.6ºF) to 60ºC (140ºF).

The temperature exchange efficiency and enthalpy exchange efficiency are tested under these testing conditions as below:

(1) Cooling efficiency: air 27ºC(80.6ºF) DB, 19.5ºC(67.1ºF) WB, water temperature in 7ºC(44.6ºF) water out 12ºC(53.6ºF).

(2) Heating efficiency: air 21ºC (69.8ºF) DB, Water temperature: 60ºC (140ºF).

The operating water pressure of the models above is no more than 0.25MPa.

The airflow volume is tested when the ESP is 0 Pa.

Model			FP-34ZD-K	FP-51ZD-K	FP-68ZD-K	FP-85ZD-K
Code			EM56000100	EM56000110	EM56000130	EM51700120
Air flow volume	High	CFM	235	300	400	424
		m^3/h	400	510	680	720
	Medium	CFM	172	232	265	362
		m^3/h	292	395	450	615
	Low	CFM	147	155	253	241
		m^3/h	250	264	430	410
Capacity	Cooling	W	2000	2800	3600	4200
	Heating	W	5000	7200	8500	9500
Power system	Type	V-Ph-Hz	220-240V~ 50Hz	220-240V~ 50Hz	220-240V~ 50Hz	220-240V~ 50Hz
	Input	W	36	58	72	80
Exterior static pressure		Pa	0	0	0	0
Water system	Water flow volume	L/s	0.125	0.14	0.16	0.20
	Pressure drop	kPa	16.5	5	10	20
Coil	Type		Aluminum fin-copper tube	Aluminum fin-copper tube	Aluminum fin-copper tube	Aluminum fin-copper tube
	Operating pressure	MPa	≤1.6MPa	≤1.6MPa	≤1.6MPa	≤1.6MPa
Motor	Type		Isolation B Capacitor startup three-speed Motor	Isolation B Capacitor startup three-speed Motor	Isolation B Capacitor startup three-speed Motor	Isolation B Capacitor startup three-speed Motor
	Capacitor	μF	1	1	1.5	3.0
Sound pressure level	Sound pressure level	dB(A)	37	38	45	47
Connection pipe size	Water inlet &outlet	inch	3/4(inner groove)	3/4(inner groove)	3/4(inner groove)	3/4(inner groove)
	Condensing water drain	inch	3/4(inner groove)	3/4(inner groove)	3/4(inner groove)	3/4(inner groove)
Outline dimension (W × D × H)		mm	834×238×694	834×238×694	834×238×694	834×238×694
Package dimension (W × D × H)		mm	963×333×845	963×333×845	963×333×845	963×333×845
Net weight		kg	26	26	27	27
Gross weight		kg	33	33	34	34
Loading quantity		20'GP	112	112	112	112
		40'GP	224	224	224	224
		40'HQ	267	267	267	267
Wireless remote controller			YB1FA(XFAN)	YB1FA(XFAN)	YB1FA(XFAN)	YB1FA(XFAN)

Model			FP-102ZD-K	FP-136ZD-K	FP-170ZD-K	FP-204ZD-K
Code			EM56000140	EM56000150	EM56000160	EM56000170
Air flow volume	High	CFM	600	647	1059	1201
		m^3/h	1020	1100	1800	2040
	Medium	CFM	450	518	751	927
		m^3/h	765	880	1276	1575
	Low	CFM	300	324	500	619
		m^3/h	510	550	850	1051
Capacity	Cooling	W	5400	6350	8900	9900
	Heating	W	11500	13700	19000	21000
Power system	Type	V-Ph-Hz	220-240V~ 50Hz	220-240V~ 50Hz	220-240V~ 50Hz	220-240V~ 50Hz
	Input	W	86	78	150	200
Exterior static pressure		Pa	0	0	0	0
Water system	Water flow volume	L/s	0.27	0.32	0.40	0.44
	Pressure drop	kPa	36	38	52	55
Coil	Type		Aluminum fin-copper tube	Aluminum fin-copper tube	Aluminum fin-copper tube	Aluminum fin-copper tube
	Operating pressure	MPa	≤1.6MPa	≤1.6MPa	≤1.6MPa	≤1.6MPa
Motor	Type		Isolation B Capacitor startup three-speed Motor	Isolation B Capacitor startup three-speed Motor	Isolation B Capacitor startup three-speed Motor	Isolation B Capacitor startup three-speed Motor
	Capacitor	μF	3.0	3.0	5.0	10.0
Sound pressure level	Sound pressure level	dB(A)	49	48	50	55
Connection pipe size	Water inlet &outlet	inch	3/4(inner groove)	3/4(inner groove)	3/4(inner groove)	3/4(inner groove)
	Condensing water drain	inch	3/4(outer groove)	3/4(outer groove)	3/4(outer groove)	3/4(outer groove)
Outline dimension (W × D × H)		mm	1300×188×600	1300×188×600	1590×238×695	1590×238×695
Package dimension (W × D × H)		mm	1417×251×739	1417×251×739	1717×333×845	1717×333×845
Net weight		kg	31.5	32.5	48.5	48.5
Gross weight		kg	36.5	37.5	57	57
Loading quantity		20'GP	108	108	58	58
		40'GP	220	220	111	111
		40'HQ	244	244	117	117
Wireless remote controller			YB1FA(XFAN)	YB1FA(XFAN)	YB1FA(XFAN)	YB1FA(XFAN)

Note:

The water working temperature is from 7ºC (44.6ºF) to 60ºC (140ºF).

The temperature exchange efficiency and enthalpy exchange efficiency are tested under these testing conditions as below:

(1) Cooling efficiency: air 27ºC(80.6ºF) DB, 19ºC(66.2ºF) WB, water temperature in 7ºC(44.6ºF) water out 12ºC(53.6ºF).

(2) Heating efficiency: air 20ºC (68ºF) DB, ater temperature in60ºC(140ºF) water out 70ºC(158ºF)

The operating water pressure of the models above is no more than 0.25MPa.

The airflow volume is tested when the ESP is 0 Pa.

5 Working principle

The cool (hot) water go in the fan coil and make heat exchange with the indoor circulated air (outdoor air), to realize cooling(heating), dehumidifying, filtrating or purifying. The processed air will be supplied to indoor directly or by air duct.

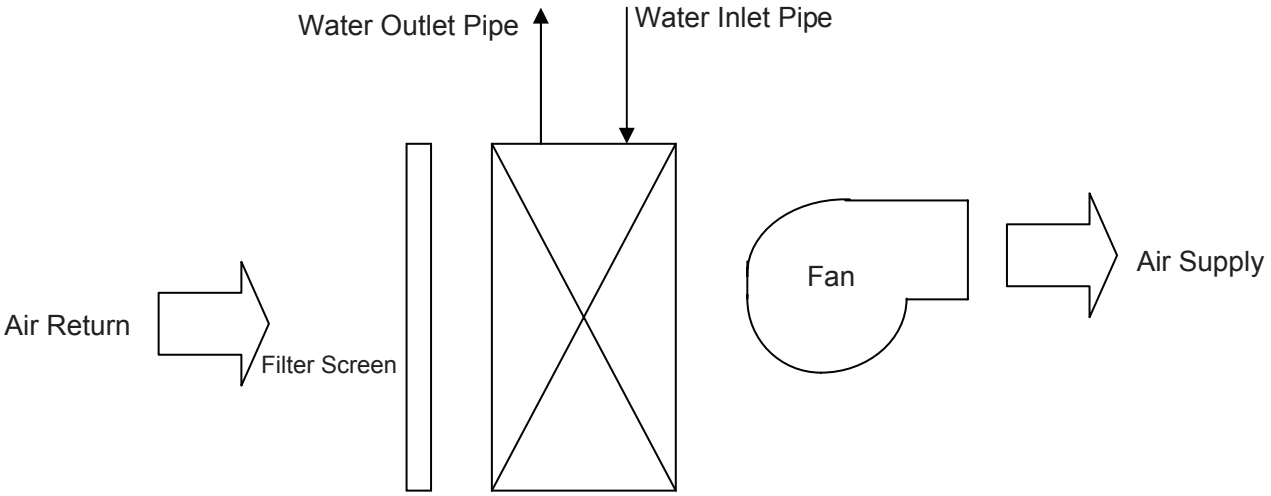

CONTROL

CONTROL

1 Unit control

1.1 Control logic

1) Independent control system, the logic is showed as below:

1.2 AC control principle sketch

Following components could be controlled by the FCU: water pump (cassette type), water valve, fan, swing fan (cassette, horizontal exposed, vertical exposed), auxiliary electric heater and water overflow protection signal. The communication data between mainboard and display board is 485, the display board could be controlled by wireless remote controller.

Note: concealed ceiling FCU is excluded in above information.

1.3 Unit operation control

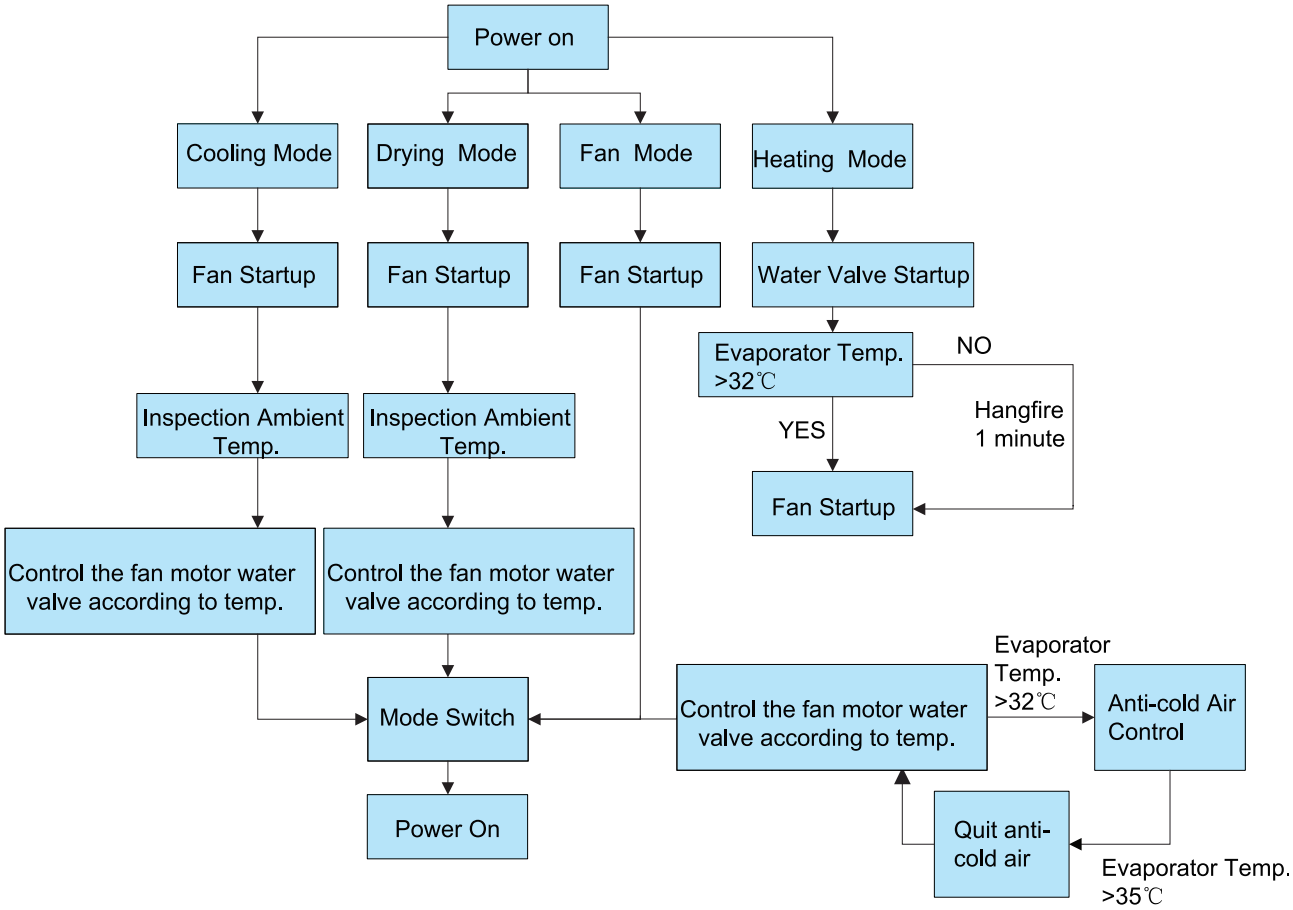

2 Wireless remote controller -Y512

Notices:

- It is a universal wireless remote controller that is widely applicable for various kinds of AC.
- Make sure there's no block between wireless remote controller and signal receiver.
- The signal receiving distance of wireless remote controller is 8m.
- Take care not to drop the wireless remote controller.
- Do not let any liquid flow into the wireless remote controller and avoid direct sunlight.

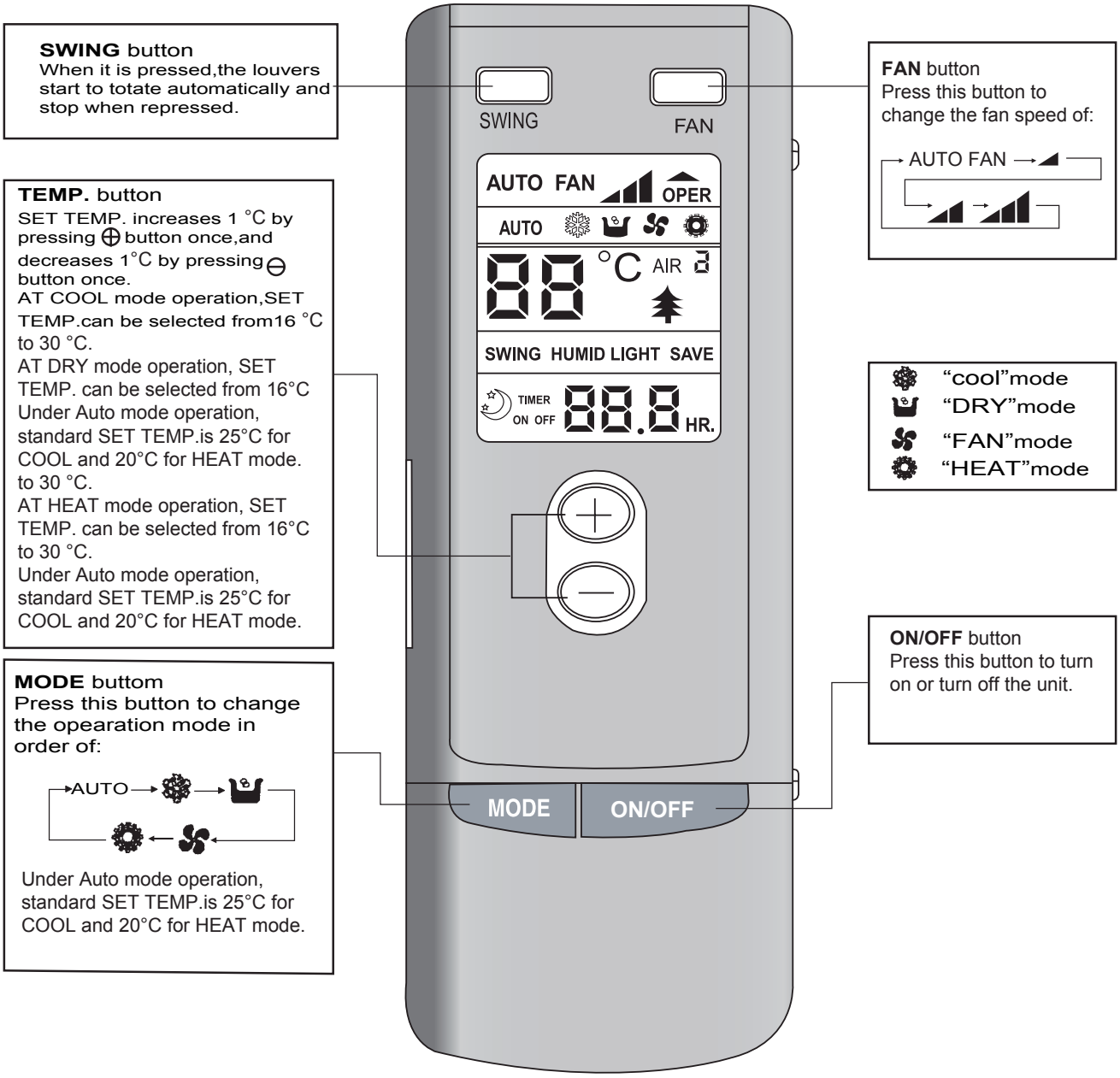

2.1 Name and Function-Remote controller. (Remove the cover)

Note: This type of remote controller is a kind of new current controller. Some buttons of the controller which are not available to this Air conditioner will not be described below. Operate are on unmentioned buttons would not impact on the normal use.

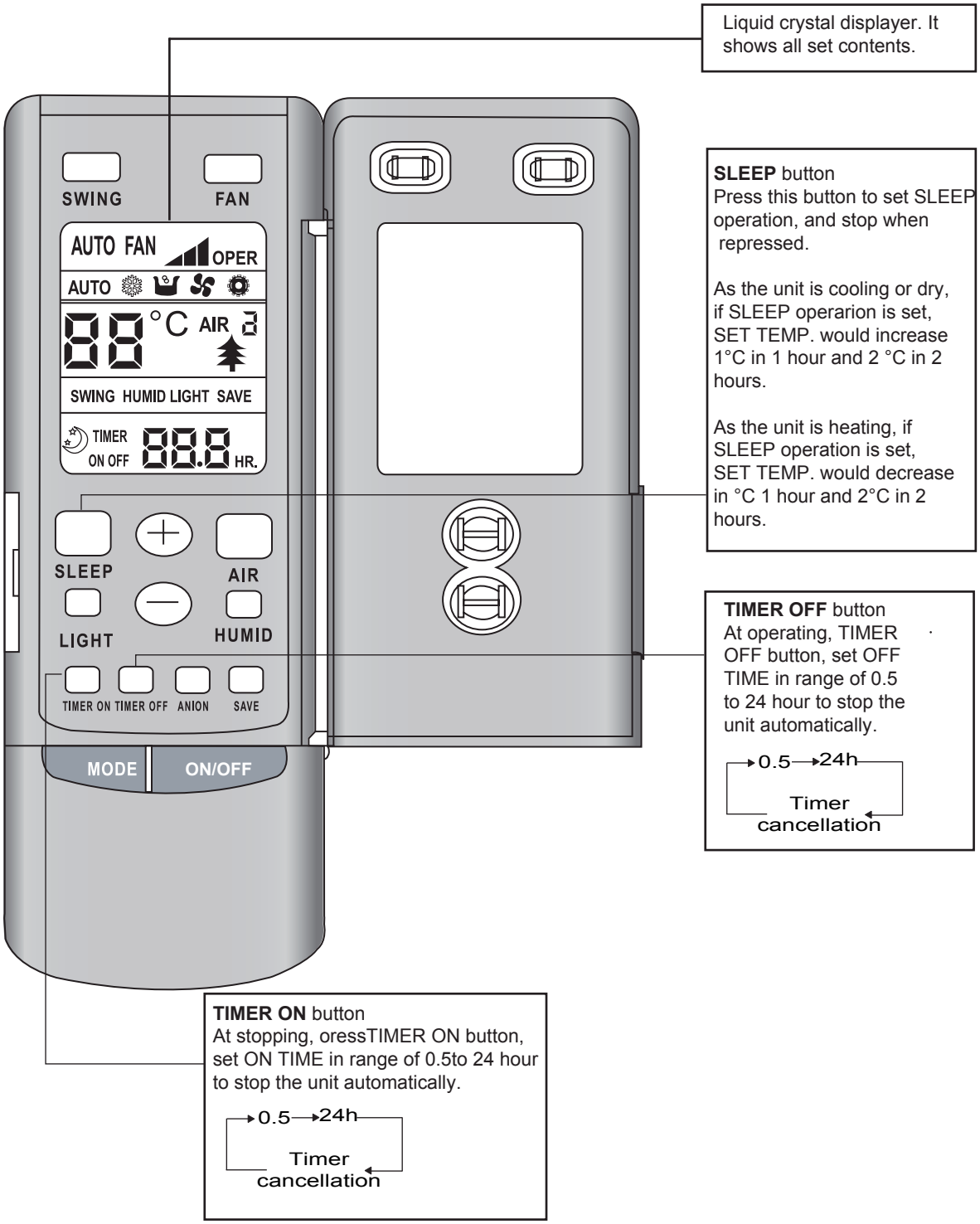

2.2 How to insert batteries

- Remove the cover from the back of the remote controller.
- Insert two batteries (TWO AAA dry-cell batteries) and press button “ACL”.
- Re-attach the cover.

NOTE:

♦ Don’t confuse the new and worn or different types of batteries.
♦ Remove batteries when the remote controller is not in use for a longtime.
♦ The lifetime of the batteries is about one year.
♦ The remote controller should be placed about 1 m or more away from the TV. Or any other electric appliances.
♦ Bad batteries are forbidden.

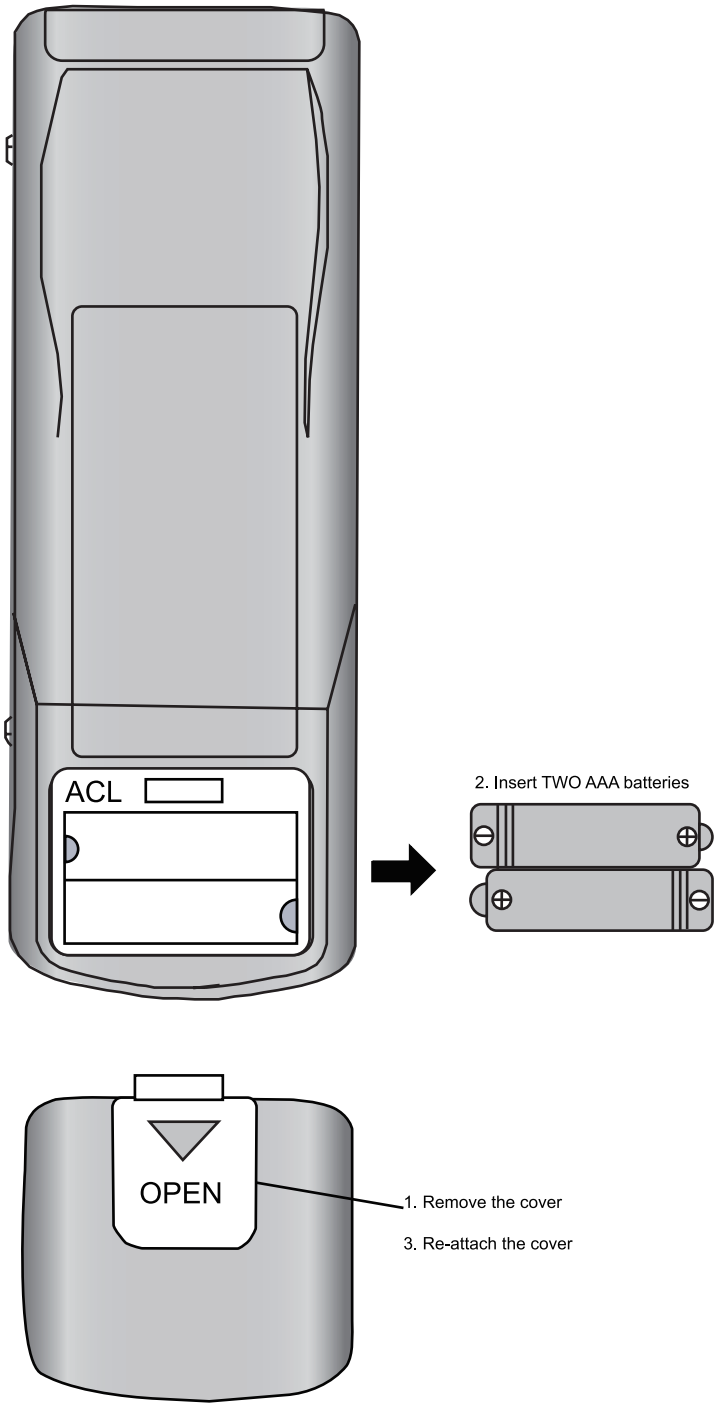

3 Wireless remote controller -YB1FA

- **ON/OFF**

Press ON/OFF button to turn on/off the unit. When the unit is turned off, the Timer, Sleep function will not be retained in memory, but the time will be retained and is still displaying.

- **MODE**

MODE button

Press this button, Auto, Cool, Dry, Fan Heat mode can be selected circularly.

Auto mode is not available in this mode.

- **SLEEP**

SLEEP button

Press this button to select Sleep On/Sleep Off. If power is on, Sleep Off is default. If the unit is turned off, the Sleep function setting will be not retained in memory. If Sleep function is on, the mark of Sleep will display. In this mode, the time of timer can be adjusted. Under Fan and Auto modes, this function is not available.

- **FAN**

FAN button

Press this button, Auto, Low, Medium, High-speed can be circularly selected. After powered on, Auto fan speed is default. Under Dehumidify mode, Low fan speed is default.

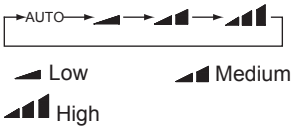

Note: Under the Dry mode, the fan speed isn't adjustable, low fan speed is default.

- **CLOCK**

CLOCK button

Press Clock button to set the time of clock. When ◷ blinks and displays, you can set the time by pressing + or - button. If no button is pressed within 10 seconds the remote will revert back to the normal display. Press ◷ again to accept the setting. If it is set the first time, 12:00 is the initial value. Note: If mark ◷ displays on the LCD, it means it is the time of clock, if not, it is the time of timer.

- **LIGHT**

LIGHT button

Press this button to select LIGHT On/Off in the displayer. When the LIGHT On is set,the mark 💡 will be displayed and the indicator light in the displayer will be on. When the LIGHT Off is set, the mark 💡 will disappear and the indicator light will be off.The function is not available for this mode.

- **X-FAN**

X-FAN button

Press this button to turn on/off the X-FAN function.

The function is not available for this mode.

- **- button**

Presetting temperature can be decrease the temperature by 1 degree Celsius once. press and hold for more than two seconds so that we can change the temperature continuously. The minimum and maximum setting range of the temperature is 16 to 30 degree Celsius.

- **+ button**

Press this button increase the temperature by 1 degree Celsius once. Press and hold for more than two seconds so that we can change the temperature continuously. The minimum and maximum setting range of the temperature is 16 to 30 degree.

- **TEMP**

TEMP button

Press this button to select the display of either indoor setting temperature or indoor ambient temperature. When the indoor unit powered on firstly, setting temperature display is default. Change status to to display the ambient temperature. If received control signal in 5 seconds, the display temp.will revert back to setting temperature. When unit is off, indoor setting temperature display is default. Note: This function is only available for certain models.

- **TURBO**

TURBO button

In Cool or Heat mode, press this button to turn on/off the Turbo function.

- **SWING UP AND DOWN BUTTON**

Press this button to adjust swing angle, which circularly changes as below:

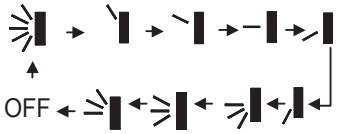

This is a universal wireless remote controller; however, the unit covered in this manual is only of the simplified SWING function. As a result, when the wireless remote controller is energized initially with the unit under the OFF status, this simplified function should be set by pressing the + button and the SWING button simultaneously, with the symbol blinking twice. Then, after the unit is turned on, this function can be activated or deactivated simply by pressing the SWING button, with the displayed symbol indicating this function is on and without this displayed symbol indicating this function is off.

- **TIMER ON BUTTON**

Press the TIMER ON button to set the timed On. Press +/- once to increase or decrease the minute by 1 minute. If pressed and held for 2 seconds, the minute will increase or decrease constantly by 1 minute. If held constantly for more than 5 seconds, the minute will begin to change in every 10 minutes. Press TIMER ON again to accept the setting and ON will show besides the time of clock meaning the setting succeeds. Press the TIMER ON again to cancel the setting.

- **TIMER OFF BUTTON**

Press the TIMER OFF button to set the timed Off. The procedures are similar as above.

Note: This is a general remote control, it could be used for multiple types (functions) of air conditioners. For some models without the functions specified here, we preserve the right to not to inform exclusively.

3.1 Operation of wireless remote control

3.1.1 Guide for operation – General operation

a. Press SLEEP button to set the sleep state.
b. Press TIME ON and TIME OFF button to scheduled the unit ON/OFF
c. Press LIGHT button to control on and off the indicator board.(This function maybe not available for some units).

3.1.2 Guide for operation-Optional operation

a. After powered on, press ON/OFF button, the unit will start to run. (Note: When it is powered off , the guide louver of main unit will close automatically.)
b. Press MODE button, select desired running mode ,or press COOL or HEAT mode to enter the corresponding operation directly.
c. Press + or-button to set the desired temperature.
d. Press FAN button to set fan speed from AUTOFAN , LOW , MID and HIGH.
e. Press button to select SWING mode.

Press +and - buttons simultaneously to lock or unlock the wireless remote control. If it is locked, the mark will display; when pressing any button, the mark will blink for three times but the air conditioner has no respondence. If unlocked, the mark will disappear.

Switch between Fahrenheit and Centigrade.

When unit is under Off state, press MODE and – button simultaneously to switch between ºF and ºC.

3.2 Changing batteries and notices.

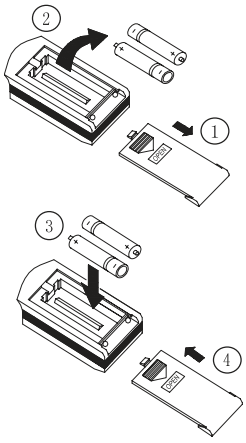

Sketch map for changing batteries

a. Slightly to press the place with OPEN , along the arrowhead direction to push the back cover of wireless remote control. (As show in figure)
b. Take out the old batteries. (As show in figure)
c. Insert two new AAA1.5V dry batteries, and pay attention to the polarity. (As show in figure).
d. Attach the back cover of wireless remote control. (As show in figure)

NOTE:
The design of this unit conforms to the requirements of ISO5151 standard.
The air volume is measured at the 0Pa external static pressure.
Cooling (heating) capacity stated above is measured under nominal working conditions corresponding to 0Pa external static pressure. The parameters are subject to change with the improvement of products, in which case the values on the nameplate will prevail.

This product must not be disposed together with the domestic waste but disposed at the authorized place for the recycling of electric and electronic appliances.

INSTALLATION

INSTALLATION

1 Dimension data

Check the following before contacting the service man. You may find the solution to your problem.
After checking, if it still doer not operate, please contact your local dealer.

PROBLEM	CAUSES
No operation.	Check if electrical wire is damaged & check if breaker switch is still on. Check if the power supply is in order. Check if the timer switch is on or not.
The air conditioner runs but does not cool enough.	Check if the preset temperature is too high. Check if the sunlight shines directly into the room. Check if the door and window are opened.
Vapor or mist fume coming out of the unit while running.	Hot air in the room mixes with cool air. This causes smoke fume.
Inoperative remote control.	Loosened or disconnected wire between the unit and the display. Check if the batteries are inserted in correct direction. Check if the batteries are exhausted or not.

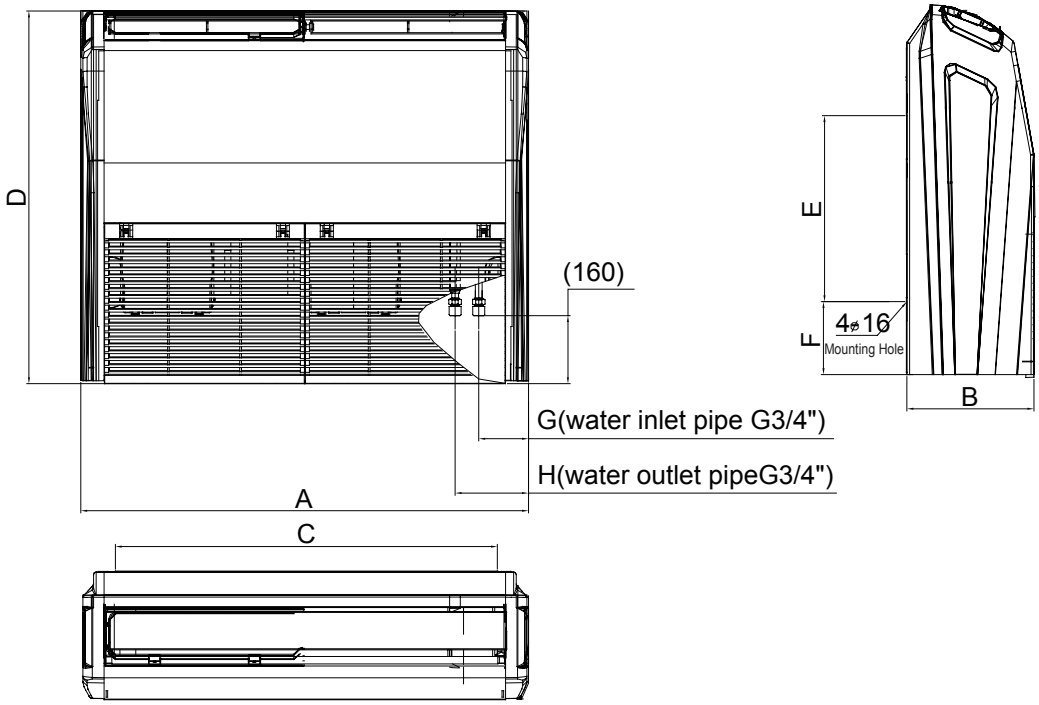

Unit:mm

Model		A	B	C	D	E	F	G	H
FP-34WM-D	FP-34ZD-K	840	238	740	695	260	203	(130)	(215)
FP-51WM-D	FP-51ZD-K	840	238	740	695	260	203	(130)	(215)
FP-68WM-D	FP-68ZD-K	840	238	740	695	260	203	(130)	(215)
FP-85WM-D	FP-85ZD-K	840	238	740	695	260	203	(130)	(215)
FP-102WM-D	FP-102ZD-K	1300	188	1202	600	260	160	(106)	(172)
FP-136WM-D	FP-136ZD-K	1300	188	1202	600	260	160	(106)	(172)
FP-170WM-D	FP-170ZD-K	1590	238	1491	695	260	203	(97.5)	(178.5)
FP-204WM-D	FP-204ZD-K	1590	238	1491	695	260	203	(97.5)	(178.5)

Note: sizes in the brackets are just for reference.

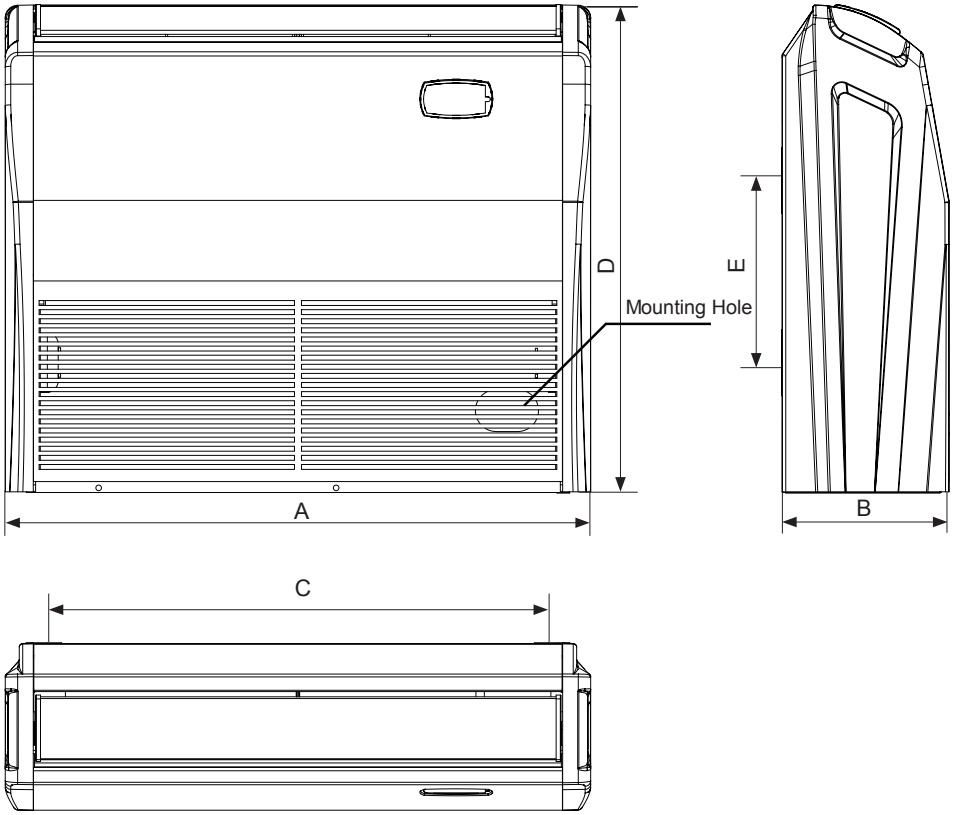

Unit:mm

Model	A	B	C	D	E
FP-34WM-K	836	238	740	695	260
FP-51WM-K	836	238	740	695	260
FP-68WM-K	1300	188	1202	600	260
FP-85WM-K	1300	188	1202	600	260
FP-102WM-K	1300	188	1202	600	260
FP-136WM-K	1590	238	1491	695	260
FP-170WM-K	1590	238	1491	695	260
FP-204WM-K	1590	238	1490	695	260

2 Selection of installation location

(1) Such a place where cool air can be distributed throughout room.
(2) Such a place where condensation water is easily drained out
(3) Such a place that can handle the weight of the unit.
(4) Such a place which has easy access for maintenance.
(5) Such a place where is permitting easy connection with the chilling water pipe.
(6) Such a place where is 1m or more away from other electric appliances such as television, audio device, etc.
(7) Avoid a location where there is heat source, high humidity or inflammable gas.
(8) Be sure that the installation conforms to the installation dimension diagram.
(9) The space around the unit is adequate for ventilation(Refer to Fig.2)
(10) The height of the installed location should be 2.3m or more from the floor.

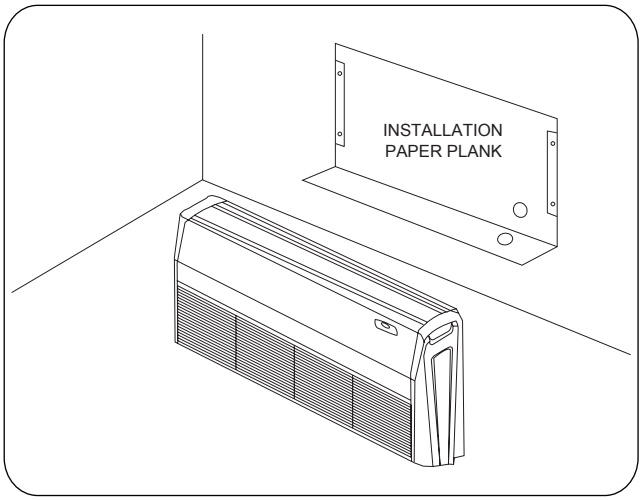

Fig.1

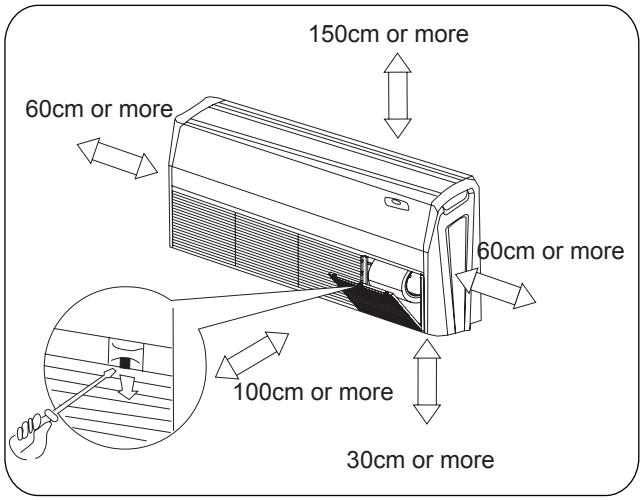

Fig.2

3 There are 2 styles of installation

(1) Ceiling Type
(2) Floor Type
Each type is similar to the other as follows;
1) Determine the mounting position on ceiling or wall.
2) Remove the return grill, the side panel, and suspender from the unit as per procedure below.
Press the fixing knob of the return grilles, the grilles will be opened wider and then pull it out from the unit.
(3) Remove the side panel fixing screw and pull to the front direction(arrow direction) to remove.(Refer to Fig.3)
(4) Loosen two hanger bracket setting bolts(M8) on each side for less than 10mm. Remove two hanger bracket fixing bolts(M6) on the rear side. Detach the hanger bracker by pulling backward (Refer to Fig.5)

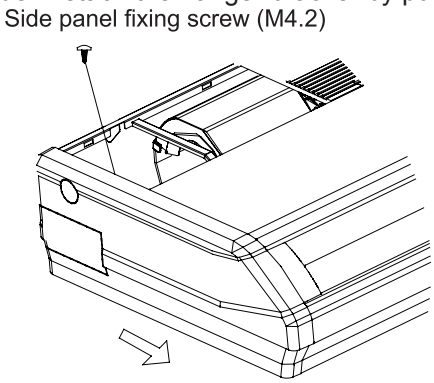

Fig.3

(5) set the suspension bolt.(Use W3/8 or M10 size suspension bolts)
Adjust the distance from the unit to the ceiling slab beforehand (Refer to Fig.4)

(6) Fix the hanger bracket to the suspension bolt

Make sure that extended suspension bolt from the ceiling stays inside the arrowed position. Readjust the hanger bracket when it is outside the arrowed position. (Refer to Fig.6)

Suspension bolt stays inside the cap of the init. Never remove the cap.

(7) Lift the unit and slide forward unit the dent.(Refer it Fig.7)

(8) Screw tightly both hanger bracket setting bolts(M8).(Refer to Fig.5)

(9) Screw tightly both hanger bracket fixing bolts (M6) to prevent the movement of the unit(Refer to Fig.5)

1) Adjust the unit height so that rear side of the drain pipe slightly inclines to improve drainage .

2) Adjust the height by turning the nut with a spanner.

3) Insert the spanner from the hanger bracket opening.(Refer to Fig.8)

♦ In case of hanging

It is possible to install using inward facing hanger brackets by not removing the brackets from the indoor init.(Refer to.9)

Be sure to use only the specified accessories and parts for installation work.

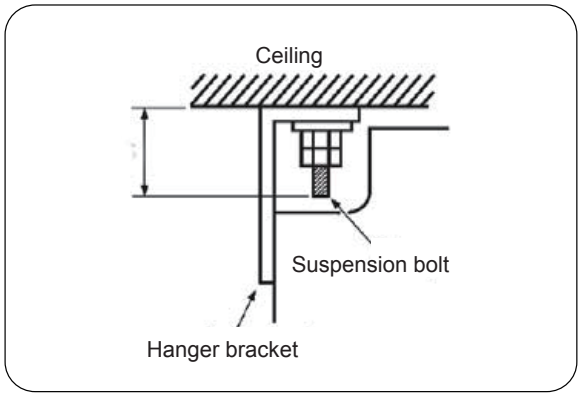

Fig.4

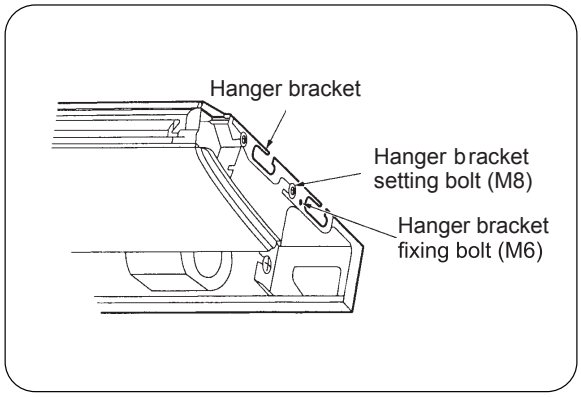

Fig.5

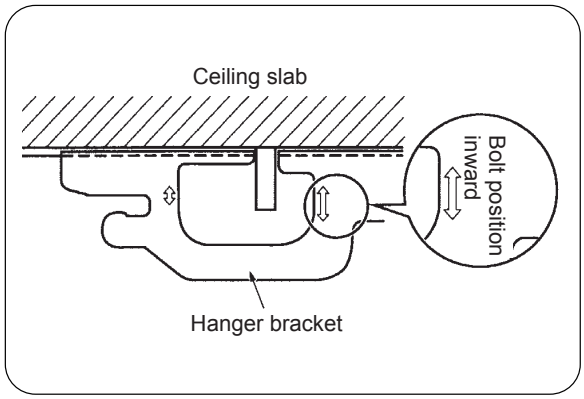

Fig.6

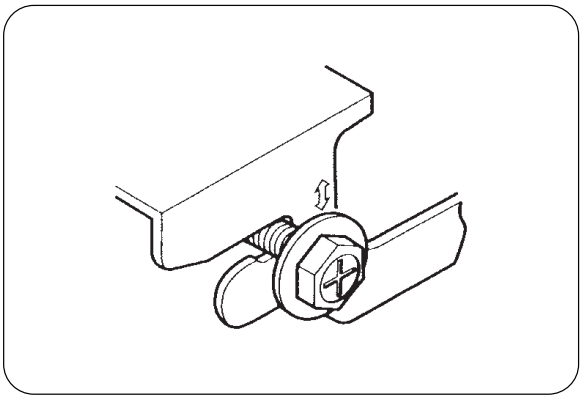

Fig.7

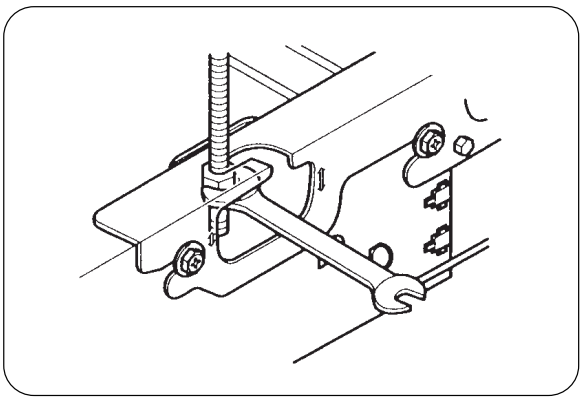

Fig.8

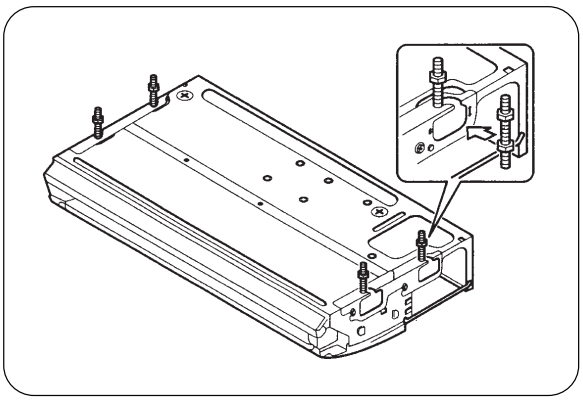

Fig.9

4 Electrical wiring

(1) Open the surface panel.
(2) Remove the electrical box cover.
(3) Route the power connection cord from the back of the indoor unit and pull it toward the front thought the wiring hole for connection.
(4) Connect the wires of the power connection cord and valve connection cord as circuit diagram.
(5) Reassemble the electrical box cover.
(6) Recover the surface panel.

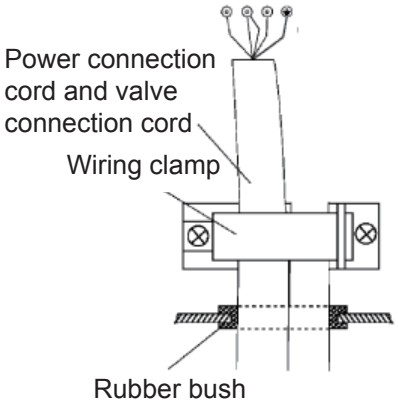

Fig.11

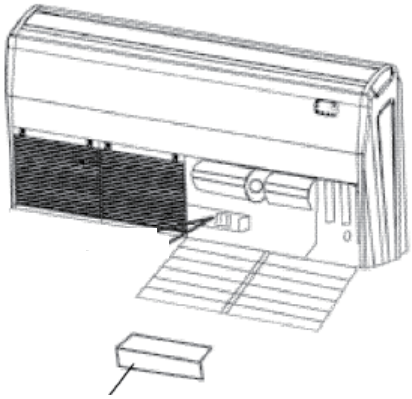

Fig.12

5 Drain piping work

⚠ CAUTION:Make sure the drain flows out .
(1) Drain piping
1) The drain pipe outlet direction can be chosen from either the right rear or right.
2) The diameter of the drain pipe should be equal to or greater than the diameter of the connecting pipe. (Vinyl tube; pipe size:20 mm; outer dimension:26 mm)
3) Keep the drain pipe short and incline downwards at a gradient of at least 111 00 to prevent air pockets. (Refer to Fig.12)
4) Use the attached drain hose. ④ and clamp ⑤. Insert the drain hose completely into the drain socket. Tighten the clamp within the range of gray tape until the screw head is less than 4 mm from the hose.(Refer to Fig.13,14)
5) Wrap the attached sealing pad OD over the clamp and drain hose to insulate. (Refer to Fig.14)
6) No folding of drain hose inside the unit. (Refer to Fig.15)
(2) Confirm that smooth drainage is achieved after the piping work.
Pour 600 cc of water into the drain pan from the air outlet for confirming drainage.(Refer to Fig.16)

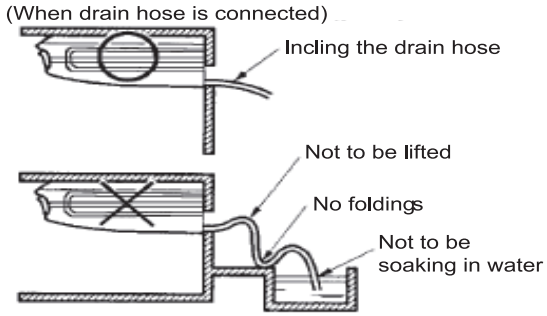

Fig.12

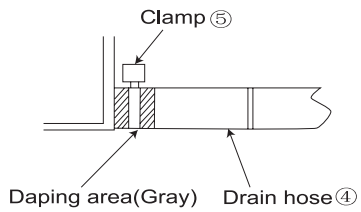

Fig.13

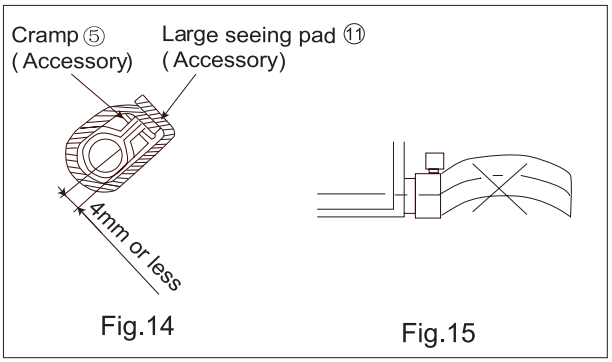

Fig.14 Fig.15

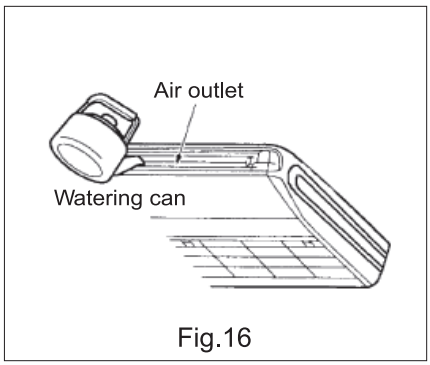

Fig.16

6 Motorized valve

6.1 Installation

(1) The installation of the motorized valve should be done according as Fig.17.Firstly connect one end of the tube joint with the water inlet tube of the unit, then connect the other end with the motorized valve, and lastly connect the motorized valve with the flare nut . During the installation, both the torque wrench and the spanner should be used and the moment of torque should be within 90 N.m. Besides, a secure connection should be guaranteed.

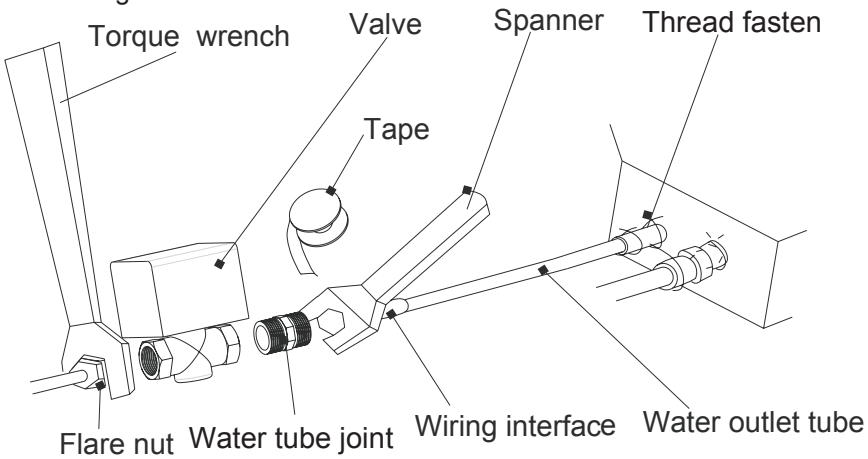

Fig.17

(2) Both the tube joint and the motorized valve are G3/4" threaded. Prior to the connection, it is recommended to wrap the tacky tape on the thread for two or three cycles for better sealing effects

(3) After the tube joint, motorized valve, water inlet tube, water outlet tube are connected reliably, start the water pump of the outdoor unit to check if they leak or not.

(4) What should be done lastly is wrapping sponge around the motorized valve and the tube for heat insulation.

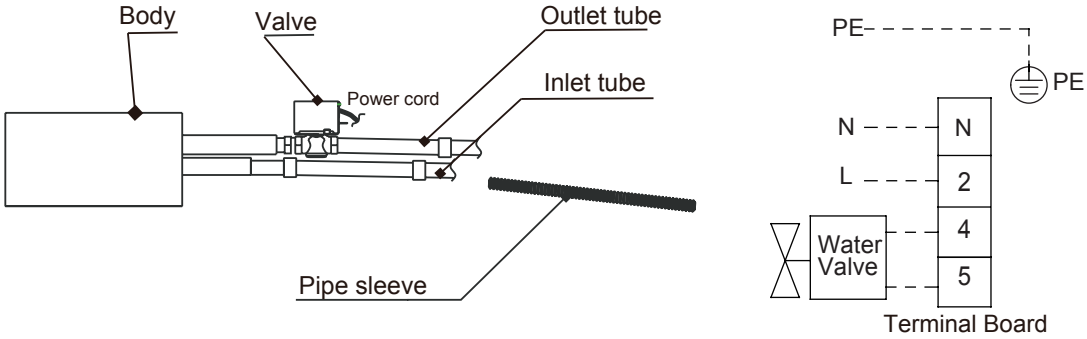

Fig.18

6.2 Electric wiring

⊘ It is prohibited to bind directly the water valve wire and sponge up with the copper tube, as there would be probably a short circuit or even electric leakage(as Fig.19).

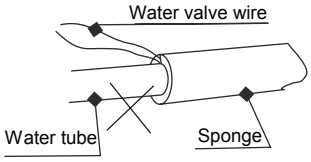

Fig.19

❗ The right way is letting the water valve wire go through the pipe sleeve and then binding the sponge and pipe sleeve up(as Fig.20).

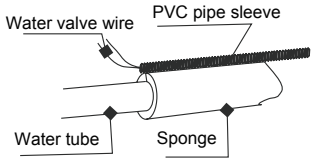

Fig.20

⊘ It is prohibited to put the valve core upside down, as thiswould allow the condensate water to enter or damage the valve core and even form a short circuit which wouldresult in a fire hazard(as Fig.21).

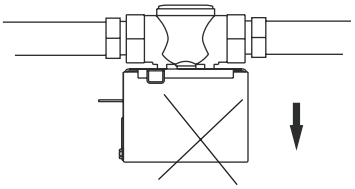

Fig.21

❗ The right way is placing the valve core in the proper position and letting the leading wire pointing at the unit(as Fig.22).

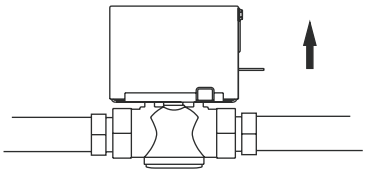

Fig.22

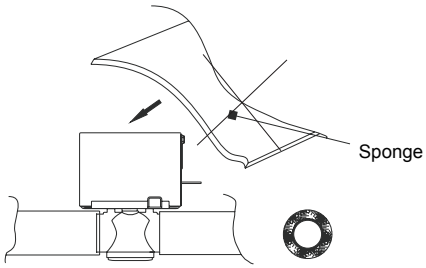

It is prohibited to wrap the whole valve with sponge, as this would affect the heat diffusion of the valve core and probably pose a fire hazard(as Fig.23).

Fig.23

7 Evakyation of the perfirmance

(1) Check electric main wire's voltage.
(2) Use a thermometer to measure cool air both in and out.
(3) The difference between in-air and out-air temperature should not be less than 8℃

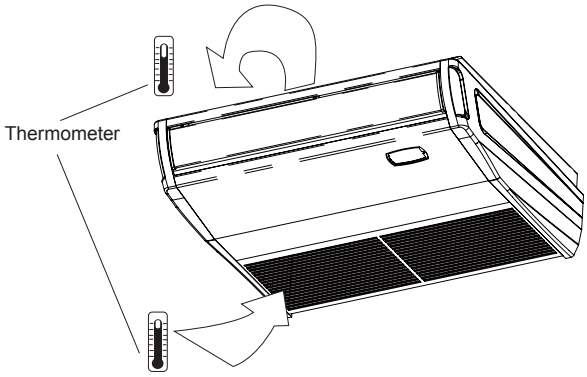

(4) The unit has Auto-restart function, it can remember the running model before power-broken.
(5)

8 Check after installation

Items to be checked	Possible malfunction	Situation
Has it been fixed firmly?	The unit may drop, shake or emit noise.	
Is heat insulation sufficient?	It may cause condensation and dripping.	
Does the insulation sufficient?	It may cause condensation and draping.	
Is the voltage in accordance with the rated voltage marked on the nameplate?	It may cause electric malfunction or damage the part.	
Is the electrical wiring and piping connection installed correctly and securely?	It may cause electric malfunction or damage the part.	
Has the unit been connected to a secure earth connection?	It may cause electrical leakage.	
Is the power cord specified	It may cause eclectic malfunction or damage the part,	
Has the inlet and outlet been covered?	It may cause insufficient cooling or heating capacity	

MAINTENANCE

MAINTENANCE

1 Error code

Ambient temp. sensor malfunction	F0 Alarm error code display: F0
Surface-Cooer temp. sensor malfunction	F1 Alarm error code display: F1

2 Troubleshooting

3 Power distribution

The logic in electric control box is as following:

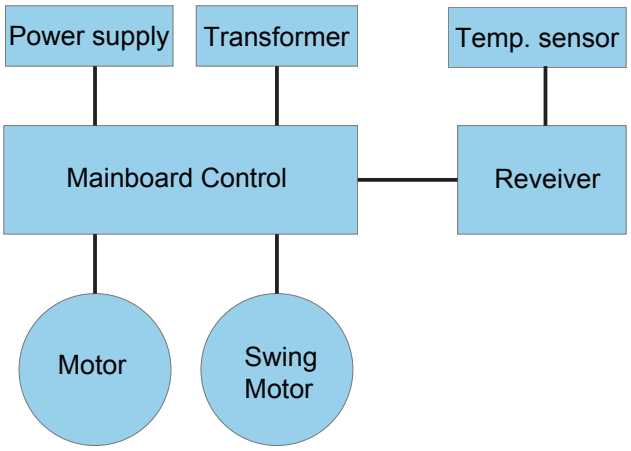

4 Wiring diagram

FP-34WM-K; FP-51WM-K; FP-136WM-K; FP-170WM-K; FP-204WM-K.

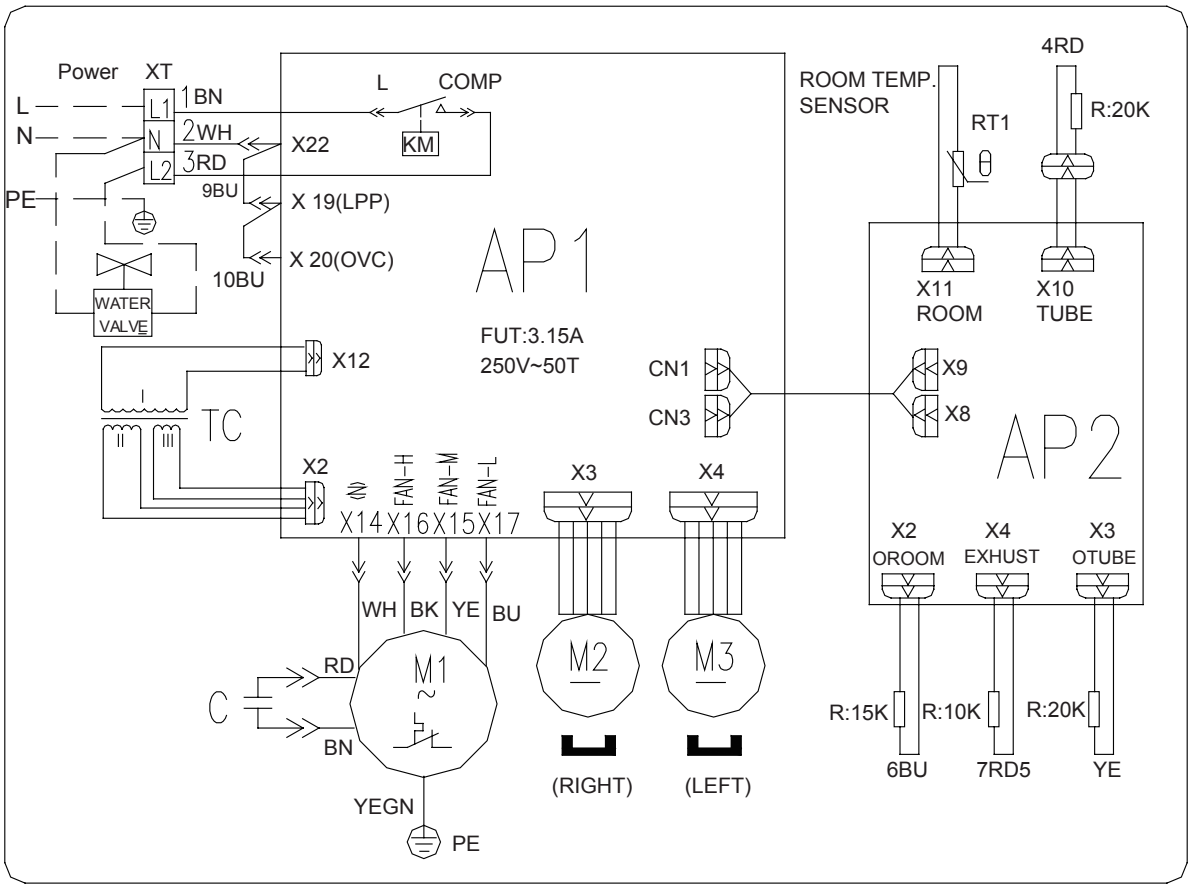

FP-68WM-K; FP-85WM-K; FP-102WM-K.

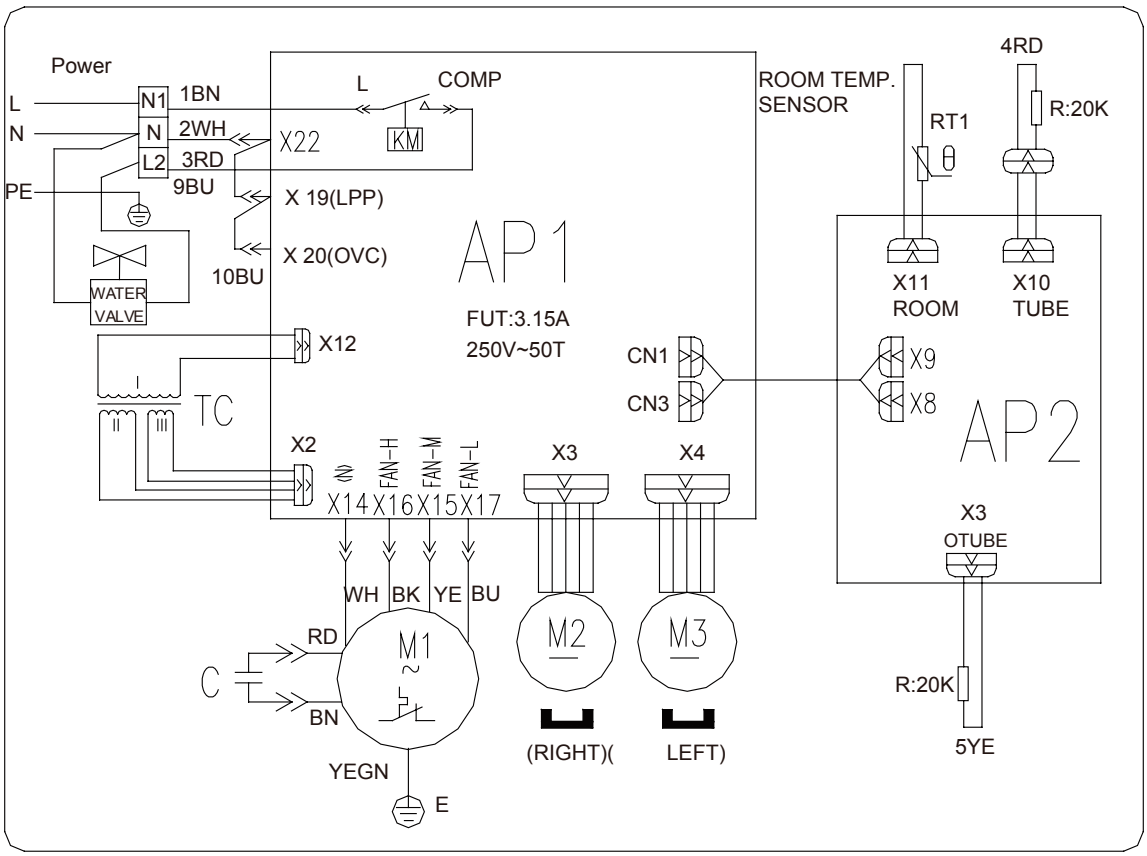

FP-34WM-D; FP-51WM-D; FP-68WM-D; FP-85WM-D; FP-102WM-D; FP-136WM-D; FP-170WM-D; FP-204WM-D.

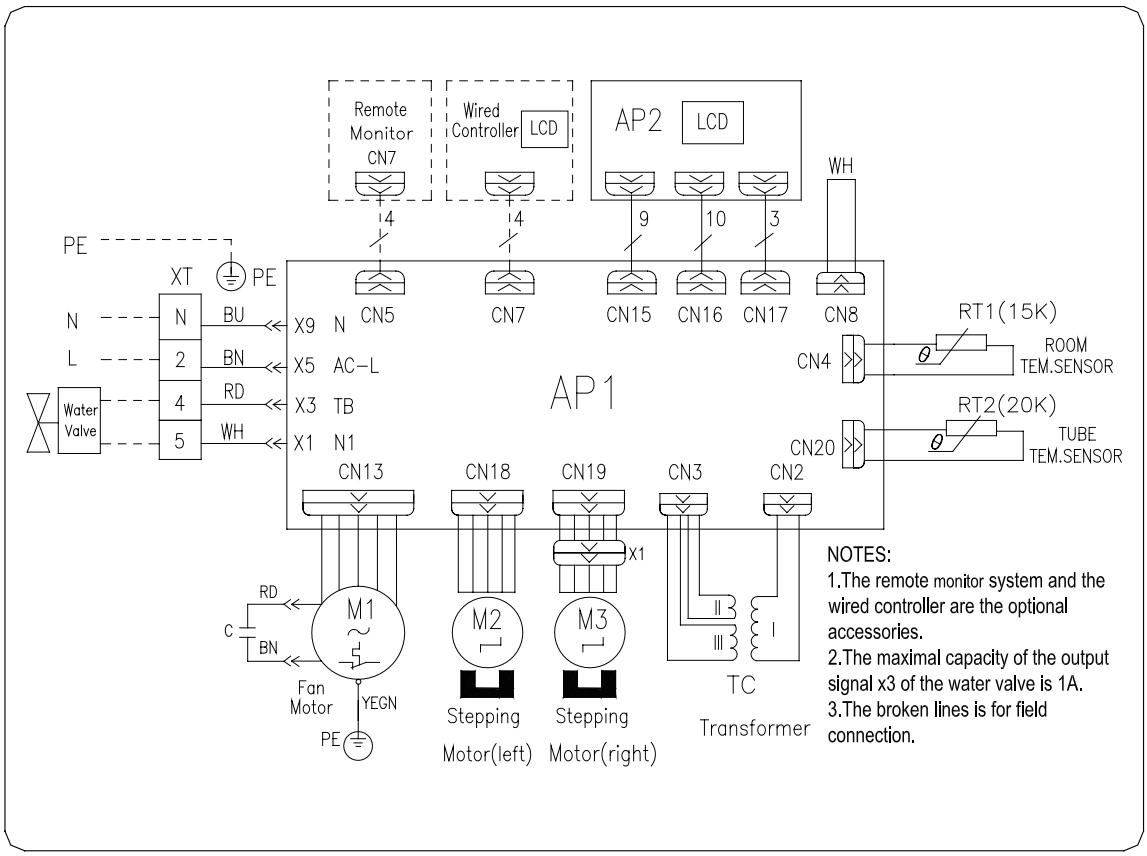

FP-34ZD-K; FP-51ZD-K; FP-68ZD-K; FP-85ZD-K; FP-102ZD-K; FP-136ZD-K; FP-170ZD-K; FP-204ZD-K.

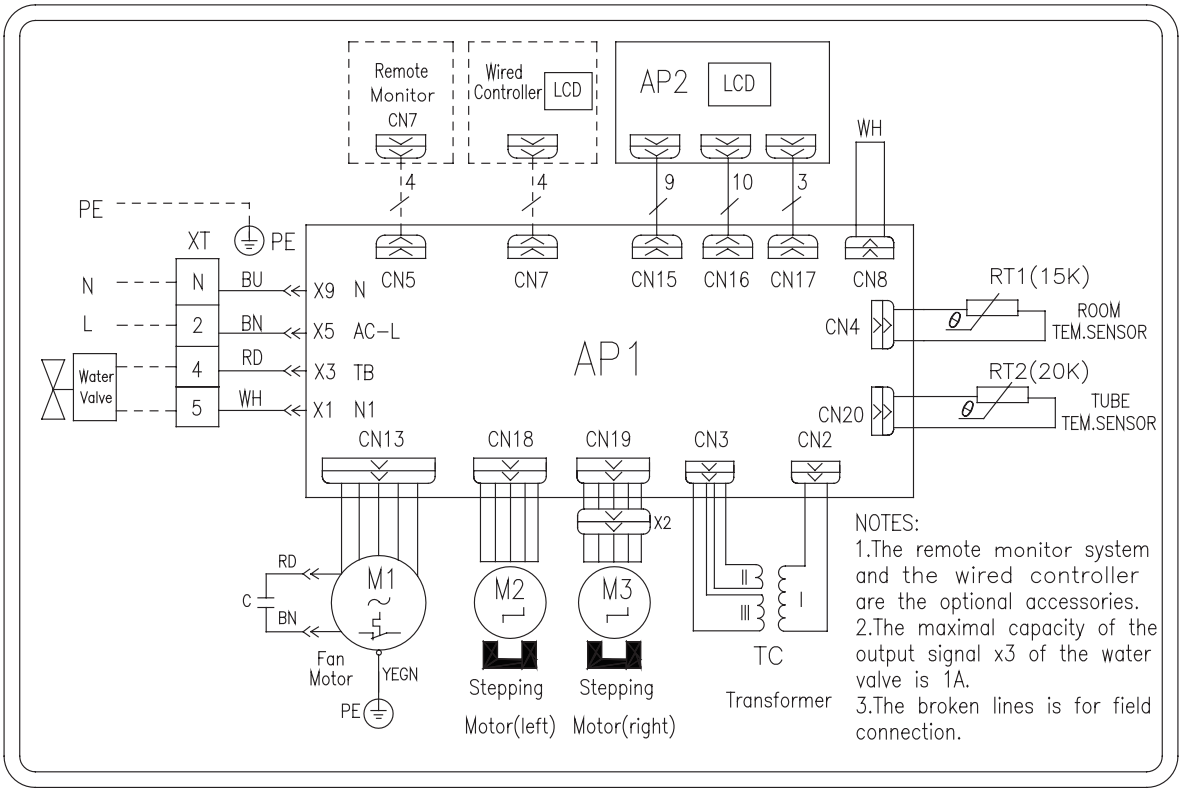

5 Disassembly of key spare part

5.1 replace motor

Operation step	Sketch
①. Open panel grille Press the panel grille clamps. Open the panel grille, squeeze the clamps to quit the grille from clamp.	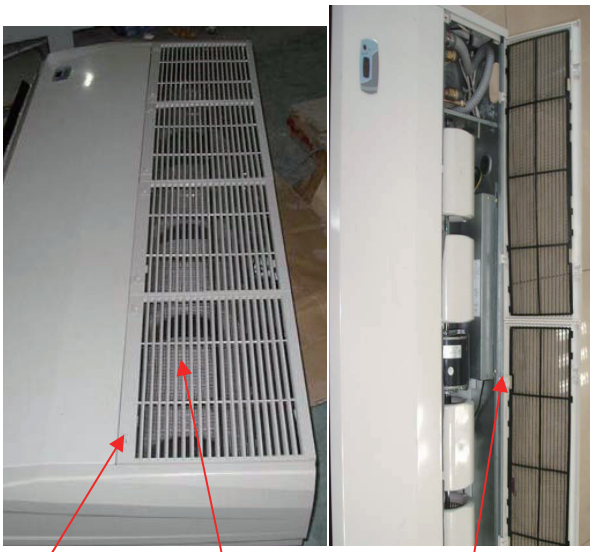

② .Remove propeller Remove the propeller as 5.1 ① and 5.1 Remove rotate shaft sub-assy and shaft coupling Loosen the fixing screws on shaft coupling. Separate the shaft coupling and rotate shaft from the motor shaft.	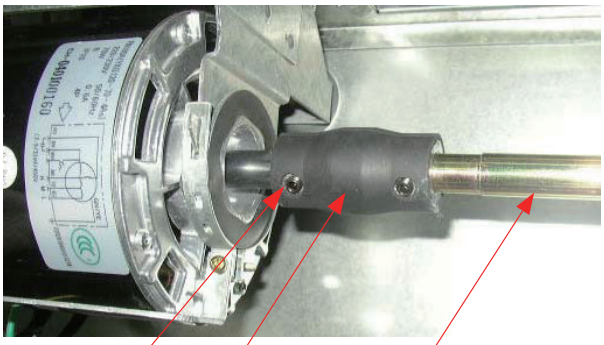 Fixing screw Shaft coupling Rotate shaft sub-assy 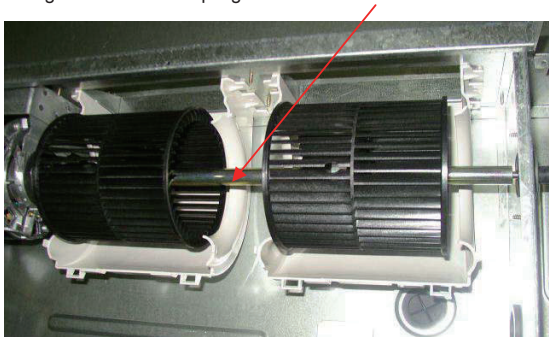
③ .Remove motor Loosen the fixing screw on motor, to remove the motor clamp assy. Loosen the fixing screw on electric box, to remove the electric box cover. Remove the motor contact tag from wiring board and capacitor of electric box. Cut off the wiring harness, take out the motor wirings and remove the motor.	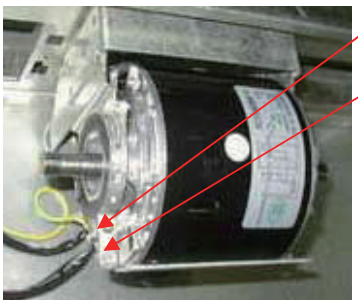 Motor fixing screw Motor clamp assy 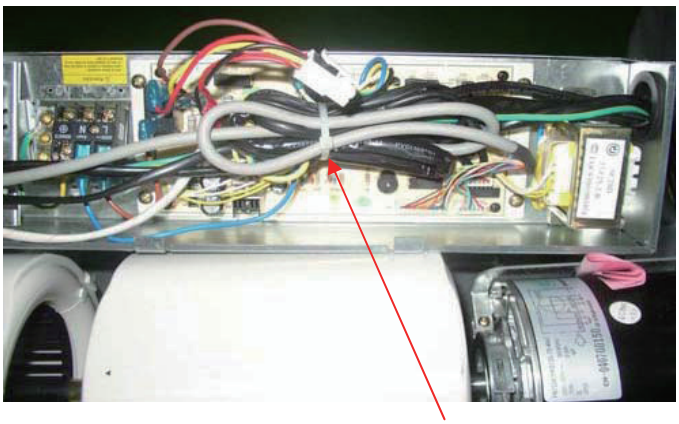 Tapping screw Electric box cover Wiring harness

5.2 Replace evaporator

Operation step	Sketch
①. Remove left and right decorative board Remove the tapping screw fixing left and right decorative board. Push the left and right decorative board, make the decorative board clamps quit from the rear side board sub-assy, to remove the left and right decorative board.	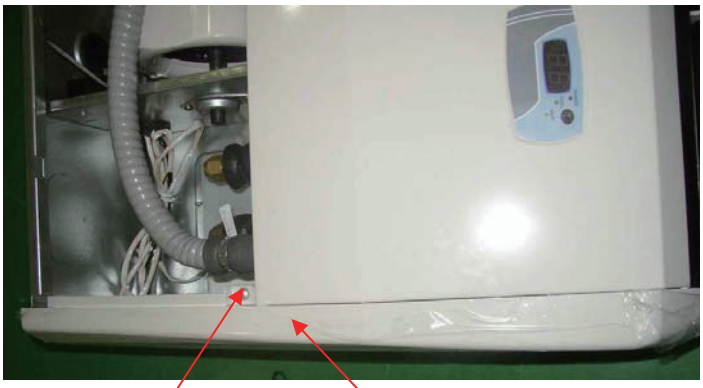 Tapping screw E lectric box cover Wiring harness 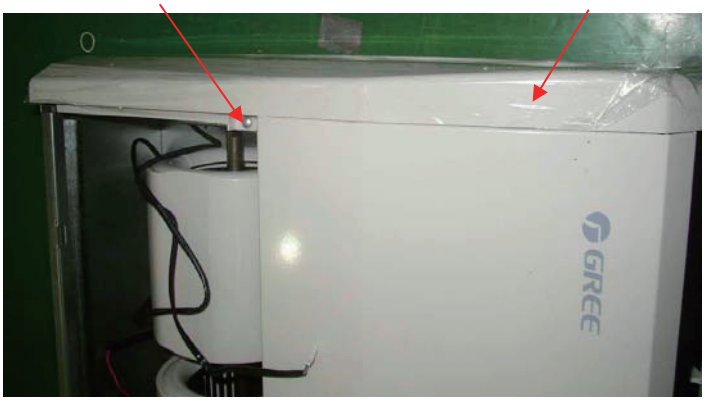
②. Remove water tray Loosen the fixing screw on water tray Remove the water tray assy	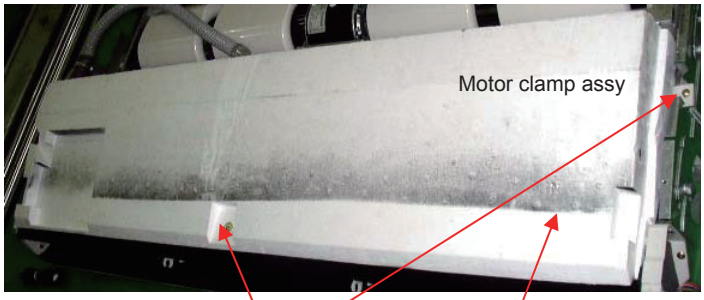 Motor clamp assy Tapping screw Water tray assy

③ . Remove evaporator

Loosen the tapping screws on left side plate of evaporator, cover and pipe clamp.

Cut off the wiring harness to remove the temp. sensor on evaporator.

Remove the evaporator.

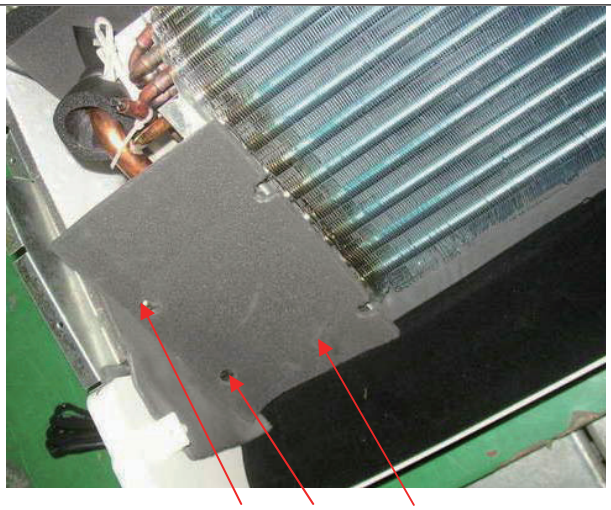

Left side plate T apping screw Cover

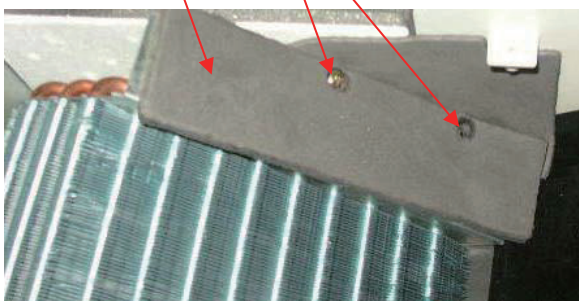

tapping screw water pipe clamp

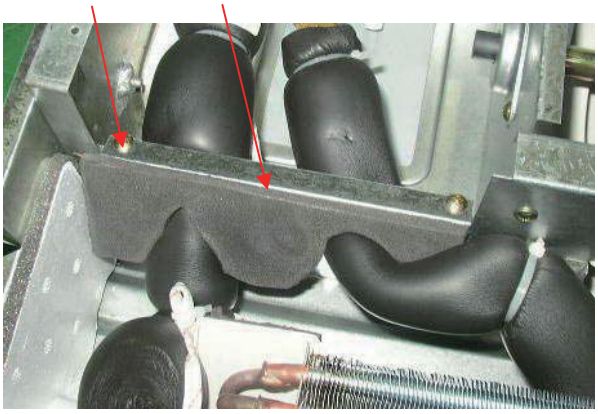

Temp. sensor bushing Temp. sensor wire Wiring harness

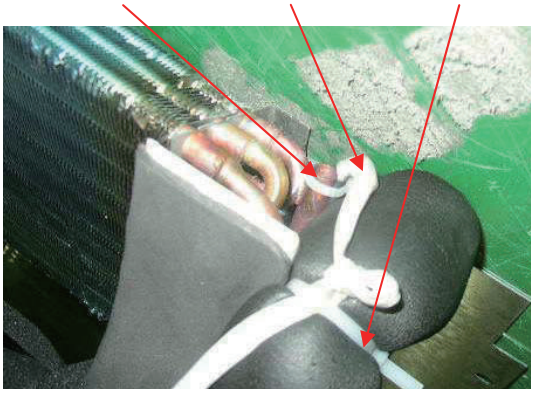

6 Exploded view and spare parts list

FP-34WM-K; FP-51WM-K; FP-34ZD-K; FP-51ZD-K;FP-34WM-D; FP-51WM-D; FP-68WM-D; FP-85WM-D exploded view and spare part list.

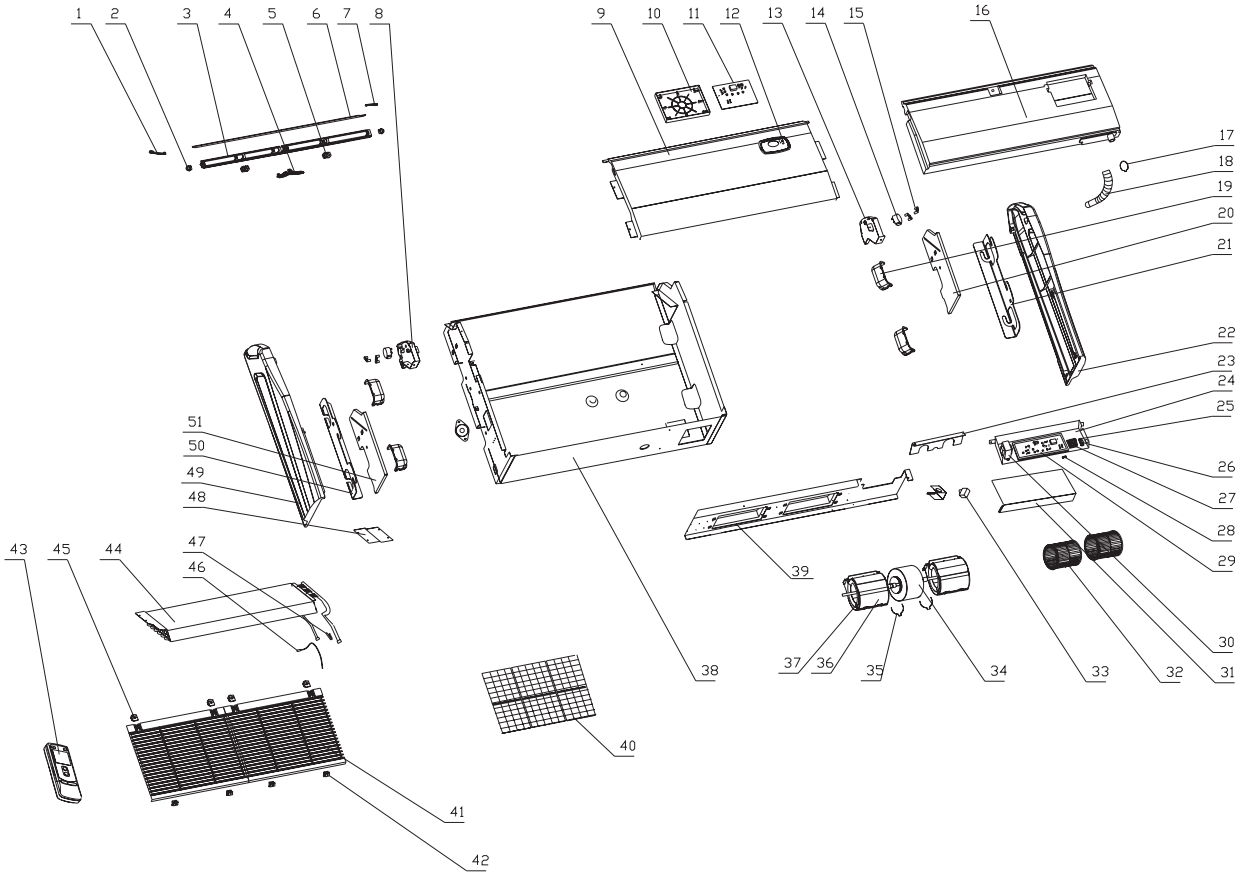

No.	Discription	FP-34WM-K	FP-51WM-K	Quantity
		EM51700070	EM51700080	
	Name of Part	Product Code	Product Code	
1	Left Decoration Plate	261124152	261124152	1
2	Shaft of Louver	10512025	10512025	3
3	Guide Louver Bracket	24212019	24212019	2
4	Guide Louver Fixed Mount	24212018	24212018	1
5	Shaft of Louver	10512026	10512026	2
6	Guide Louver	1051953202	1051953202	1
7	Right Decoration Plate	261124162	261124162	1
8	Left Mounting Plate of Swing Motor	26152005	26152005	1
9	Panel Sub-assy	01532001	01532001	1
10	Mounting Box Sub-Assy	20102041	20102041	1
11	Display Board	30546104	30546104	1
12	Button Panel Sub-Assy	201620042	201620042	1
13	Right Mounting Plate of Swing Motor	26152006	26152006	1
14	Stepping Motor	15212402	15212402	2
15	Press Plate of Swing Motor	26112026	26112026	2
16	Water Tray Component	01279531	01279531	1
17	Pipe Hoop	70812001	70812001	1
18	Drain Pipe Sub-Assy	05235433	05235433	1
19	Handle	26232001	26232001	4
20	Foam Sub-assy of Right Side Plate	12312404	12312404	1
21	Mounting Plate	01332404	01332404	1
22	Decorative Board	26112027	26112027	1
23	Mounting Plate Sub-assy	01847502	01847502	1
24	Electric Box Sub-Assy	01403242	01403242	1
25	Press Wire Holder	24253001	24253001	1
26	Press Wire Board	24253002	24253002	1
27	Terminal Board	42010178	42010178	1
28	Protective Tube	46010013	46010013	1
29	Main Board	30036052	30036052	1
30	Transformer	43110237	43110237	1
31	Electric Box Cover	01413008	01413008	1
32	Centifugal Fan	10312401	10312401	2
33	Capacitor	33010020	33010020	1
34	Motor	15707302	15707302	1
35	Motor Clamp	70819522	70819522	4
36	Front propeller housing	22202031	22202031	2
37	Rear propeller housing	22202032	22202032	2
38	Rear Side Plate Sub-assy	0130201501	0130201501	1
39	Motor Support Sub-assy	01709532	01709532	1
40	Filter Sub-assy	11122013	11122013	1
41	Panel Grille	22412010	22412010	2
42	Panel Grille Buckle 2	26252003	26252003	4
43	Remote Control	305125033	305125033	1
44	Cooling coil assy	01109532	01109532	1
45	Panel Grille Buckle 1	26252002	26252002	4
46	Environment Sensor	39000186	39000186	1
47	Sensor Insert B	42020063	42020063	1
48	Cover Plate of Evaporator	01072409	01072409	1
49	Left Decorative Board	26112028	26112028	1
50	Left Mounting Plate	01332405	01332405	1
51	Foam Sub-assy of Left Side Plate	12312403	12312403	1

Above data is subject to change without notice,please refer the SP in global service website.

NO.	Discription	FP-34WM-D	FP-51WM-D	FP-68WM-D	FP-85WM-D	Quantity
		EM51700090	EM517000100	EM982300110	EM1447600120	
	Name of Part	Product Code	Product Code	Product Code	Product Code	
1	Left Decoration Plate	261124152	261124152	261124152	261124152	1
2	Shaft of Louver	10512025	10512025	10512025	10512025	3
3	Guide Louver Bracket	24212019	24212019	24212019	24212019	2
4	Guide Louver Fixed Mount	24212018	24212018	24212018	24212018	1
5	Shaft of Louver	10512026	10512026	10512026	10512026	2
6	Guide Louver	1051953202	1051953202	1051953202	1051953202	1
7	Right Decoration Plate	261124162	261124162	261124162	261124162	1
8	Left Mounting Plate of Swing Motor	26152005	26152005	26152005	26152005	1
9	Panel Sub-assy	01532001	01532001	01532001	01532001	1
10	Mounting Box Sub-Assy	201020413	201020413	201020413	201020413	1
11	Display Board	30295502	30295502	30295502	30295502	1
12	Button Panel Sub-Assy	201620041	201620041	201620041	201620041	1
13	Right Mounting Plate of Swing Motor	01326000052	01326000052	01326000052	01326000052	1
14	Stepping Motor	1521240211	1521240211	1521240211	1521240211	2
15	Press Plate of Swing Motor	26112026	26112026	26112026	26112026	2
16	Water Tray Component	01279531	01279531	01279531	01279531	1
17	Pipe Hoop	70812001	70812001	70812001	70812001	1
18	Drain Pipe Sub-Assy	05235433	05235433	05235433	05235433	1
19	Handle	26232001	26232001	26232001	26232001	4
20	Foam Sub-assy of Right Side Plate	12312404	12312404	12312404	12312404	1
21	Mounting Plate	01332404	01332404	01332404	01332404	1
22	Decorative Board	26112027	26112027	26112027	26112027	1
23	Mounting Plate Sub-assy	01847502	01847502	01847502	01847502	1
24	Electric Box Sub-Assy	01396000128	01396000128	01396000130	01396000131	1
25	Press Wire Holder	24253001	24253001	24253001	24253001	1
26	Press Wire Board	24253002	24253002	24253002	24253002	1
27	Terminal Board	42010268	42010268	42010268	42010268	1
28	Protective Tube	46010013	46010013	46010013	46010013	1
29	Main Board	30225056	30225056	30225056	30225056	1
30	Transformer	43110237	43110237	43110237	43110237	1
31	Electric Box Cover	01426000030	01426000030	01426000030	01426000030	1
32	Centifugal Fan	10312401	10312401	10312401	10312401	2
33	Capacitor	33010089	33010089	33010020	33010026	1
34	Motor	157073029	157073029	1570730210	1570730211	1
35	Motor Clamp	70819522	70819522	70819522	70819522	4
36	Front propeller housing	22202031	22202031	22202031	22202031	2
37	Rear propeller housing	22202032	22202032	22202032	22202032	2
38	Rear Side Plate Sub-assy	0130201501	0130201501	0130201501	0130201501	1
39	Motor Support Sub-assy	01709532	01709532	01709532	01709532	1
40	Filter Sub-assy	11122013	11122013	11122013	11122013	1
41	Panel Grille	22412010	22412010	22412010	22412010	2
42	Panel Grille Buckle 2	26252003	26252003	26252003	26252003	4
43	Remote Control	30510516	30510516	30510516	305125063	1
44	Cooling coil assy	01156000082	01126000067	01126000068	01126000069	1
45	Panel Grille Buckle 1	26252002	26252002	26252002	26252002	4
46	Environment Sensor	39000191	39000191	39000191	39000191	1
47	Sensor Insert B	42020063	42020063	42020063	42020063	1
48	Cover Plate Of Evaporator	01072409	01072409	01072409	01072409	1
49	Left Decorative Board	26112028	26112028	26112028	26112028	1
50	Left Mounting Plate	01332405	01332405	01332405	01332405	1
51	Foam Sub-assy of Left Side Plate	12312403	12312403	12312403	12312403	1

Above data is subject to change without notice,please refer the SP in global service website.

No.	Discription	FP-34ZD-K	FP-51ZD-K	Quantity
		EM56000100	EM56000110	
	Name of Part	Product Code	Product Code	
1	Left Decoration Board	26112028	26112028	1
2	Shaft of Louver	10512025	10512025	3
3	Guide Louver Bracket	24212096	24212096	2
4	Guide Louver Fixed Mount	24212018	24212018	1
5	Shaft of Louver	10512026	10512026	2
6	Guide Louver	1051953201	1051953201	1
7	Right Decoration Board	26112027	26112027	1
8	Left Mounting Plate of Swing Motor	26152005	26152005	1
9	Panel Sub-assy	01532001	01532001	1
10	Mounting Box Sub-Assy	201020415	201020415	1
11	Display Board	30295502	30295502	1
12	Button Panel Sub-Assy	201620041	201620041	1
13	Right Mounting Plate of Swing Motor	26152006	26152006	1
14	Stepping Motor	15212402	15212402	2
15	Press Plate of Swing Motor	26112026	26112026	2
16	Water Tray Component	01279531	01279531	1
17	Pipe Hoop	70812001	70812001	1
18	Drain Pipe Sub-Assy	2690320401	05235433	1
19	Handle	26232001	26232001	4
20	Foam Sub-assy of Right Side Plate	12312404	12312404	1
21	Mounting Plate	01332404	01332404	1
22	Decorative Board	26112027	26112027	1
23	Mounting Plate Sub-assy	01847502	01847502	1
24	Electric Box Sub-Assy	01396000128	01396000128	1
25	Press Wire Holder	24253001	24253001	1
26	Press Wire Board	24253002	24253002	1
27	Terminal Board	42010268	42010268	1
28	Protective Tube	/	/	1
29	Main Board	30225056	30225056	1
30	Transformer	43110237	43110237	1
31	Electric Box Cover	01426000030	01426000030	1
32	Centifugal Fan	10312401	10312401	2
33	Capacitor	33010089	33010089	1
34	Motor	157073029	157073029	1
35	Motor Clamp	70819522	70819522	4
36	Front propeller housing	22202031	22202031	2
37	Rear propeller housing	22202032	22202032	2
38	Rear Side Plate Sub-assy	01316000107	01316000107	1
39	Motor Support Sub-assy	01709532	01709532	1
40	Filter Sub-assy	11122013	11122013	1
41	Panel Grille	22412010	22412010	2
42	Panel Grille Buckle 2	26252003	26252003	4
43	Remote Control	30510516	30510516	1
44	Cooling coil assy	01126000066	01126000066	1
45	Panel Grille Buckle 1	26252002	26252002	4
46	Environment Sensor	39000286	39000286	1
47	Sensor Insert B	42020063	42020063	1
48	Cover Plate of Evaporator	01072409	01072409	1
49	Left Decorative Board	26112028	26112028	1
50	Left Mounting Plate	01332405	01332405	1
51	Foam Sub-assy of Left Side Plate	12312403	12312403	1

Above data is subject to change without notice,please refer the SP in global service website.

FP-68WM-K; FP-85WM-K; FP-102WM-K; FP-68ZD-K; FP-85ZD-K; FP-102ZD-K; FP-102WM-D; FP-170WM-D; FP-136WM-D exploded view and spare parts list.

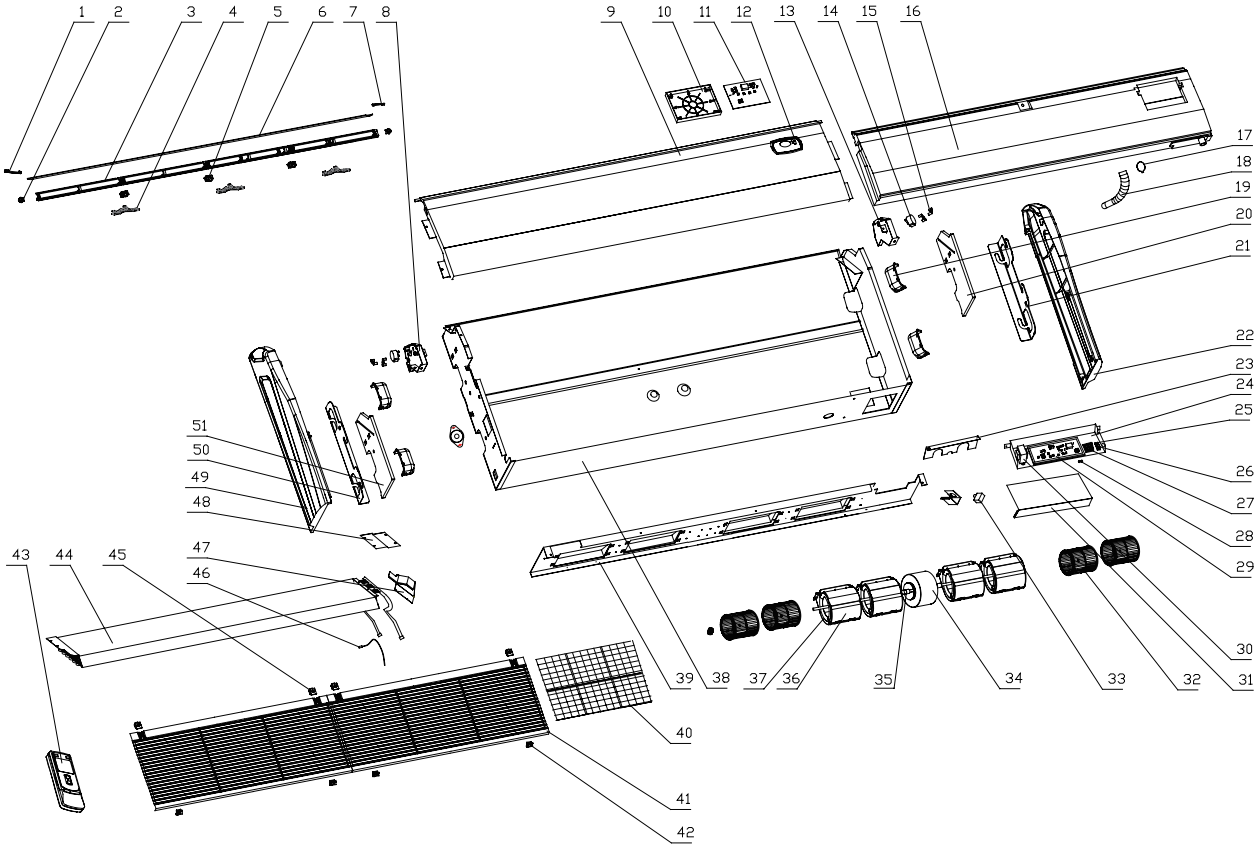

No.	Discription	FP-68WM-K	FP-85WM-K	FP-102WM-K	Quantity
		EM51700020	EM51700050	EM51700060	
	Name of Part	Part Code	Part Code	Part Code	
1	Left Decoration Plate	261124172	261124172	261124172	1
2	Shaft of Louver	10512025	10512025	10512025	2
3	Guide Louver Bracket	2690601702	2690601702	2690601702	3
4	Guide Louver Fixed Mount	24222016	24222016	24222016	2
5	Shaft of Louver	10512026	10512026	10512026	2
6	Guide Louver	105124042	105124042	105124042	1
7	Right Decoration Plate	261124212	261124212	261124212	1
8	Left Mounting Plate of Swing Motor	26152007	26152007	26152007	1
9	Panel Sub-assy	01532414	01532414	01532414	1
10	Mounting Box Sub-Assy	201020411	201020411	201020411	1
11	Display Board	30546106	30546106	30546106	1
12	Button Panel Sub-Assy	201620041	201620041	201620041	1
13	Right Mounting Plate of Swing Motor	26152008	26152008	26152008	1
14	Stepping Motor	15212402	15212402	15212402	2
15	Press Plate of Swing Motor	26112026	26112026	26112026	2
16	Water Tray Component	0127241402	0127241402	0127241402	1
17	Pipe Hoop	70812001	70812001	70812001	1
18	Drain Pipe Sub-Assy	05235433	05235433	05235433	1
19	Handle	26232001	26232001	26232001	4
20	Foam Sub-assy of Right Side Plate	12312407	12312407	12312407	1
21	Mounting Plate	01332404	01332404	01332404	1
22	Decorative Board	26112033	26112033	26112033	1
23	Mounting Plate Sub-assy	01847503	01847503	01847503	1
24	Electric Box Sub-Assy	01403242	01403242	01403242	1
25	Press Wire Holder	24253001	24253001	24253001	1
26	Press Wire Board	24253002	24253002	24253002	1
27	Terminal Board	42010178	42010178	42010178	1
28	Protective Tube	46010013	46010013	46010013	1
29	Main Board	30036052	30036052	30036052	1
30	Transformer	43110237	43110237	43110237	1
31	Electric Box Cover	01413008	01413008	01413008	1
32	Centifugal Fan	10312401	10312401	10312401	4
33	Capacitor	33010027	33010027	33010027	1
34	Motor	15012406	15012406	15012406	1
35	Axletree	73012403	73012403	73012403	2
36	Front propeller housing	22202031	22202031	22202031	4
37	Rear propeller housing	22202032	22202032	22202032	4
38	Rear Side Plate Sub-assy	01302418	01302418	01302418	1
39	Motor Support Sub-assy	01702401	01702401	01702401	1
40	Filter Sub-assy	11122012	11122012	11122012	1
41	Panel Grille	22412011	22412011	22412011	1
42	Panel Grille Buckle 2	26252003	26252003	26252003	2
43	Remote Control	305125063	305125063	305125063	1
44	Cooling coil assy	0112612001	0112612001	0112612001	1
45	Panel Grille Buckle 1	26252002	26252002	26252002	2
46	Environment Sensor	39000186	39000186	39000186	1
47	Water-leading board assy	1362401	1362401	1362401	1
48	Cover Plate Of Evaporator	01072417	01072417	01072417	1
49	Left Decorative Board	26112032	26112032	26112032	1
50	Left Mounting Plate	01332405	01332405	01332405	1
51	Foam Sub-assy of Left Side Plate	12312406	12312406	12312406	1

Above data is subject to change without notice,please refer the SP in global service website.

No.	Discription	FP-102WM-D	FP-136WM-D	Quantity
		EM51700130	EM51700140	
	Name of Part	Part Code	Part Code	
1	Left Decoration Plate	261124172	261124172	1
2	Shaft of Louver	10512025	10512025	2
3	Guide Louver Bracket	2690601702	2690601702	3
4	Guide Louver Fixed Mount	24222016	24222016	2
5	Shaft of Louver	10512026	10512026	2
6	Guide Louver	105124042	105124042	1
7	Right Decoration Plate	261124212	261124212	1
8	Left Mounting Plate of Swing Motor	26152007	26152007	1
9	Panel Sub-assy	01532414	01532414	1
10	Mounting Box Sub-Assy	01326000053	01326000053	1
11	Display Board	30295502	30295502	1
12	Button Panel Sub-Assy	201620041	201620041	1
13	Right Mounting Plate of Swing Motor	26152008	26152008	1
14	Stepping Motor	1521240211	1521240211	2
15	Press Plate of Swing Motor	26112026	26112026	2
16	Water Tray Component	0127241402	0127241402	1
17	Pipe Hoop	70812001	70812001	1
18	Drain Pipe Sub-Assy	05235433	05235433	1
19	Handle	26232001	26232001	4
20	Foam Sub-assy of Right Side Plate	12312407	12312407	1
21	Mounting Plate	01332404	01332404	1
22	Decorative Board	26112033	26112033	1
23	Mounting Plate Sub-assy	01847503	01847503	1
24	Electric Box Sub-Assy	01396000132	01396000139	1
25	Press Wire Holder	24253001	24253001	1
26	Press Wire Board	24253002	24253002	1
27	Terminal Board	42010268	42010268	1
28	Protective Tube	46010013	46010013	1
29	Main Board	30225056	30225056	1
30	Transformer	43110237	43110237	1
31	Electric Box Cover	1426000030	1426000030	1
32	Centifugal Fan	10312401	10312401	4
33	Capacitor	33010027	33010027	1
34	Motor	15012406	15012406	1
35	Axletree	73012403	73012403	2
36	Front propeller housing	22202031	22202031	4
37	Rear propeller housing	22202032	22202032	4
38	Rear Side Plate Sub-assy	01302418	01302418	1
39	Motor Support Sub-assy	01702401	01702401	1
40	Filter Sub-assy	11122012	11122012	1
41	Panel Grille	22412011	22412011	1
42	Panel Grille Buckle 2	26252003	26252003	2
43	Remote Control	30510516	30510516	1
44	Cooling coil assy	01126000070	01126000072	1
45	Panel Grille Buckle 1	26252002	26252002	2
46	Environment Sensor	3900012123	3900012123	1
47	Water-leading board assy	1362401	1362401	1
48	Cover Plate Of Evaporator	01072417	01072417	1
49	Left Decorative Board	26112032	26112032	1
50	Left Mounting Plate	01332405	01332405	1
51	Foam Sub-assy of Left Side Plate	12312406	12312406	1

Above data is subject to change without notice,please refer the SP in global service website.

No.	Discription	FP-68ZD-K	FP-85ZD-K	FP-102ZD-K	Quantity
		EM56000130	EM56000120	EM56000140	
	Name of Part	Part Code	Part Code	Part Code	
1	Left Decoration Plate	26112028	26112028	26112032	1
2	Shaft of Louver	10512025	10512025	10512025	2
3	Guide Louver Bracket	24212096	24212096	2690601701	3
4	Guide Louver Fixed Mount	24222016	24222016	24222016	2
5	Shaft of Louver	10512026	10512026	10512026	2
6	Guide Louver	1051953201	1051953201	105124041	1
7	Right Decoration Plate	26112027	26112027	26112033	1
8	Left Mounting Plate of Swing Motor	26152005	26152005	26152407	1
9	Panel Sub-assy	01532001P	01532001P	01532414	1
10	Mounting Box Sub-Assy	201020415	201020415	01326000053	1
11	Display Board	30295502	30295502	30295502	1
12	Button Panel Sub-Assy	201620041	201620041	201620041	1
13	Right Mounting Plate of Swing Motor	26152008	26152008	26152008	1
14	Stepping Motor	15212402	15212402	15212402	2
15	Press Plate of Swing Motor	26112026	26112026	26112026	2
16	Water Tray Component	01279531	01279531	0127241401	1
17	Pipe Hoop	70812001	70812001	70812001	1
18	Drain Pipe Sub-Assy	2690320401	2690320401	2690320401	1
19	Handle	26232001	26232001	26232001	4
20	Foam Sub-assy of Right Side Plate	12312404	12312404	12312407	1
21	Mounting Plate	01332404	01332404	01332404	1
22	Decorative Board	01332404	01332404	01332404	1
23	Mounting Plate Sub-assy	26112033	26112033	26112033	1
24	Electric Box Sub-Assy	01396000130	01396000500	01396000132	1
25	Press Wire Holder	24253001	24253001	24253001	1
26	Press Wire Board	24253002	24253002	24253002	1
27	Terminal Board	42010268	42010268	42010268	1
28	Protective Tube	46010013	46010013	46010013	1
29	Main Board	30225056	30225056	30225056	1
30	Transformer	43110237	43110237	43110237	1
31	Electric Box Cover	01426000030	01426000030	01426000030	1
32	Centifugal Fan	10312401	10312401	10312401	4
33	Capacitor	33010020	33010027	33010027	1
34	Motor	1570730210	1570730211	1501240602	1
35	Axletree	73012403	73012403	73012403	2
36	Front propeller housing	22202031	22202031	22202031	4
37	Rear propeller housing	22202032	22202032	22202032	4
38	Rear Side Plate Sub-assy	01319534	01319534	01302419	1
39	Motor Support Sub-assy	01709532	01709532	01702410	1
40	Filter Sub-assy	11122013	11122013	11122012	1
41	Panel Grille	22412010	22412010	22412011	1
42	Panel Grille Buckle 2	26252003	26252003	26252003	2
43	Remote Control	30510516	30510516	30510516	1
44	Cooling coil assy	01126000068	01126000069	01126000070	1
45	Panel Grille Buckle 1	26252002	26252002	26252002	2
46	Environment Sensor	39000286	39000286	39000286	1
47	Water-leading board assy	02227348P	02227348P	01362401	1
48	Cover Plate Of Evaporator	01072409	01072409	01072417	1
49	Left Decorative Board	26112028	26112028	26112032	1
50	Left Mounting Plate	01332405	01332405	01332405	1
51	Foam Sub-assy of Left Side Plate	12312403	12312403	12312406	1

Above data is subject to change without notice,please refer the SP in global service website.

FP-136WM-K; FP-170WM-K; FP-204WM-K; FP-136ZD-K; FP-170ZD-K; FP-204ZD-K;FP-170WM-D; FP-204WM-D exploded view and spare parts list.

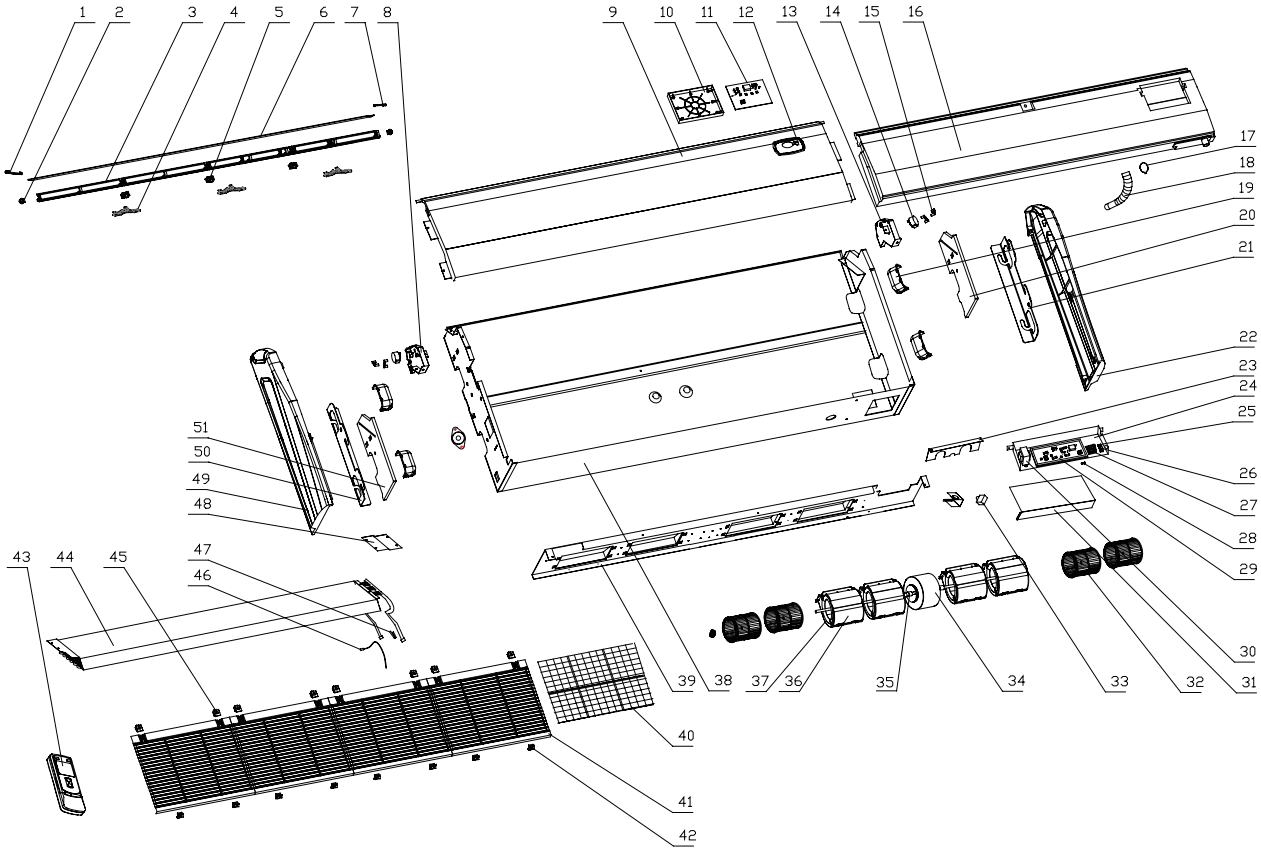

No.	Discription	FP-136WM-K	FP-170WM-K	FP-204WM-K	Quantity
		EM51700010	EM51700040	EM51700030	
	Name of Part	Part Code	Part Code	Part Code	
1	Left Decoration Plate	261124152	261124152	261124152	1
2	Shaft of Louver	10512025	10512025	10512025	3
3	Guide Louver Bracket	2421209601	2421209601	2421209601	4
4	Guide Louver Fixed Mount	24212018	24212018	24212018	3
5	Shaft of Louver	10512026	10512026	10512026	2
6	Guide Louver	105124082	105124082	105124082	1
7	Right Decoration Plate	261124162	261124162	261124162	1
8	Left Mounting Plate of Swing Motor	26152005	26152005	26152005	1
9	Panel Sub-assy	01532413	01532413	01532413	1
10	Mounting Box Sub-Assy	201020413	201020413	201020413	1
11	Display Board	30546104	30546104	30546104	1
12	Button Panel Sub-Assy	201620041	201620041	201620041	1
13	Right Mounting Plate of Swing Motor	26152006	26152006	26152006	1
14	Stepping Motor	15212402	15212402	15212402	2
15	Press Plate of Swing Motor	26112026	26112026	26112026	2
16	Water Tray Component	0127240802	0127240802	0127240802	1
17	Pipe Hoop	70812001	70812001	70812001	1
18	Drain Pipe Sub-Assy	05235433	05235433	05235433	1
19	Handle	26232001	26232001	26232001	4
20	Foam Sub-assy of Right Side Plate	12312404	12312404	12312404	1
21	Mounting Plate	01332404	01332404	01332404	1
22	Decorative Board	26112027	26112027	26112027	1
23	Mounting Plate Sub-assy	01847502	01847502	01847502	1
24	Electric Box Sub-Assy	01403242	01403242	01403242	1
25	Press Wire Holder	24253001	24253001	24253001	1
26	Press Wire Board	24253002	24253002	24253002	1
27	Terminal Board	42010178	42010178	42010178	1
28	Protective Tube	46010013	46010013	46010013	1
29	Main Board	30036052	30036052	30036052	1
30	Transformer	43110237	43110237	43110237	1
31	Electric Box Cover	01413008	01413008	01413008	1
32	Centifugal Fan	10319051	10319051	10319051	4
33	Capacitor	33010064	33010064	33010056	1
34	Motor	15012405	15012405	15012404	1
35	Axletree	73012403	73012403	73012403	2
36	Front propeller housing	22202030	22202030	22202030	4
37	Rear propeller housing	22202029	22202029	22202029	4
38	Rear Side Plate Sub-assy	1302412	1302412	1302412	1
39	Motor Support Sub-assy	01702406	01702406	01702406	1
40	Filter Sub-assy	11122013	11122013	11122013	1
41	Panel Grille	22412010	22412010	22412010	1
42	Panel Grille Buckle 2	26252003	26252003	26252003	2
43	Remote Control	305125063	305125063	305125063	1
44	Cooling coil assy	01126121	0112612101	0112612101	1
45	Panel Grille Buckle 1	26252002	26252002	26252002	2
46	Environment Sensor	39000186	39000186	39000186	1
47	Sensor Insert B	42020063	42020063	42020063	1
48	Cover Plate Of Evaporator	01072409	01072409	01072409	1
49	Left Decorative Board	26112028	26112028	26112028	1
50	Left Mounting Plate	01332405	01332405	01332405	1
51	Foam Sub-assy of Left Side Plate	12312403	12312403	12312403	1

Above data is subject to change without notice,please refer the SP in global service website.

No.	Discription	FP-170WM-D	FP-204WM-D	Quantity
		EM51700150	EM51700160	
	Name of Part	Part Code	Part Code	
1	Left Decoration Plate	261124152	261124152	1
2	Shaft of Louver	10512025	10512025	3
3	Guide Louver Bracket	2421209601	2421209601	4
4	Guide Louver Fixed Mount	24212018	24212018	3
5	Shaft of Louver	10512026	10512026	2
6	Guide Louver	105124082	105124082	1
7	Right Decoration Plate	261124162	261124162	1
8	Left Mounting Plate of Swing Motor	26152005	26152005	1
9	Panel Sub-assy	01532413	01532413	1
10	Mounting Box Sub-Assy	201020413	201020413	1
11	Display Board	30295502	30295502	1
12	Button Panel Sub-Assy	201620041	201620041	1
13	Right Mounting Plate of Swing Motor	26152006	26152006	1
14	Stepping Motor	1521240211	1521240211	2
15	Press Plate of Swing Motor	26112026	26112026	2
16	Water Tray Component	0127240802	0127240802	1
17	Pipe Hoop	70812001	70812001	1
18	Drain Pipe Sub-Assy	05235433	05235433	1
19	Handle	26232001	26232001	4
20	Foam Sub-assy of Right Side Plate	12312404	12312404	1
21	Mounting Plate	01332404	01332404	1
22	Decorative Board	26112027	26112027	1
23	Mounting Plate Sub-assy	01847502	01847502	1
24	Electric Box Sub-Assy	01396000138	01396000137	1
25	Press Wire Holder	24253001	24253001	1
26	Press Wire Board	24253002	24253002	1
27	Terminal Board	42010268	42010268	1
28	Protective Tube	46010013	46010013	1
29	Main Board	30225056	30225056	1
30	Transformer	43110237	43110237	1
31	Electric Box Cover	01426000030	01426000030	1
32	Centifugal Fan	10319051	10319051	4
33	Capacitor	33010064	33010056	1
34	Motor	1501240501	1501240402	1
35	Axletree	73012403	73012403	2
36	Front propeller housing	22202030	22202030	4
37	Rear propeller housing	22202029	22202029	4
38	Rear Side Plate Sub-assy	1302412	1302412	1
39	Motor Support Sub-assy	01702406	01702406	1
40	Filter Sub-assy	11122013	11122013	1
41	Panel Grille	22412010	22412010	1
42	Panel Grille Buckle 2	26252003	26252003	2
43	Remote Control	30510516	30510516	1
44	Cooling coil assy	01126000071	01126000071	1
45	Panel Grille Buckle 1	26252002	26252002	2
46	Environment Sensor	3900012123	3900012123	1
47	Sensor Insert B	42020063	42020063	1
48	Cover Plate Of Evaporator	01072409	01072409	1
49	Left Decorative Board	26112028	26112028	1
50	Left Mounting Plate	01332405	01332405	1
51	Foam Sub-assy of Left Side Plate	12312403	12312403	1

Above data is subject to change without notice,please refer the SP in global service website.

No.	Discription	FP-136ZD-K	FP-170ZD-K	FP-204ZD-K	Quantity
		EM56000150	EM56000160	EM56000170	
	Name of Part	Part Code	Part Code	Part Code	
1	Left Decoration Plate	26112032	26112028	26112028	1
2	Shaft of Louver	10512025	10512025	10512025	3
3	Guide Louver Bracket	2690601701	24212096	24212096	4
4	Guide Louver Fixed Mount	24222016	24212018	24212018	3
5	Shaft of Louver	10512026	10512026	10512026	2
6	Guide Louver	105124041	105124081	105124081	1
7	Right Decoration Plate	26112033	26112027	26112027	1
8	Left Mounting Plate of Swing Motor	26152007	26152005	26152005	1
9	Panel Sub-assy	01532414	01532413	01532413	1
10	Mounting Box Sub-Assy	01326000053	01326000053	01326000053	1
11	Display Board	30295502	30295502	30295502	1
12	Button Panel Sub-Assy	201620041	201620041	201620041	1
13	Right Mounting Plate of Swing Motor	26152008	26152006	26152006	1
14	Stepping Motor	15212402	15212402	15212402	2
15	Press Plate of Swing Motor	26112026	26112026	26112026	2
16	Water Tray Component	0127241401	0128940602	0128940602	1
17	Pipe Hoop	70812001	70812001	70812001	1
18	Drain Pipe Sub-Assy	2690320401	2690320401	2690320401	1
19	Handle	26232001	26232001	26232001	4
20	Foam Sub-assy of Right Side Plate	12312404	12312404	12312404	1
21	Mounting Plate	01332404	01332404	01332404	1
22	Decorative Board	26112027	26112027	26112027	1
23	Mounting Plate Sub-assy	01847503	01847502	01847502	1
24	Electric Box Sub-Assy	01396000132	01396000138	01396000452	1
25	Press Wire Holder	24253001	24253001	24253001	1
26	Press Wire Board	24253002	24253002	24253002	1
27	Terminal Board	42010268	42010268	42010268	1
28	Protective Tube	46010013	46010013	46010013	1
29	Main Board	30225056	30225056	30225056	1
30	Transformer	43110237	43110237	43110237	1
31	Electric Box Cover	01426000030	01426000030	01426000030	1
32	Centifugal Fan	10312401	10319051	10319051	4
33	Capacitor	33010027	33010027	33010056	1
34	Motor	1501240602	1501240501	1501240402	1
35	Axletree	73012403	73012403	73012403	2
36	Front propeller housing	22202031	22202030	22202030	4
37	Rear propeller housing	22202032	22202029	22202029	4
38	Rear Side Plate Sub-assy	01302419	01302411	01302411	1
39	Motor Support Sub-assy	01702410	01702411	01702406	1
40	Filter Sub-assy	11122012	11122012	11122013	1
41	Panel Grille	22412011	22412010	22412010	1
42	Panel Grille Buckle 2	26252003	26252003	26252003	2
43	Remote Control	30510516	30510516	30510516	1
44	Cooling coil assy	01126000072	01126000227	01126000227	1
45	Panel Grille Buckle 1	26252002	26252002	26252002	2
46	Environment Sensor	39000286	39000286	39000286	1
47	Sensor Insert B	42020063	42020063	42020063	1
48	Cover Plate Of Evaporator	01072417	01072409	01072409	1
49	Left Decorative Board	26112032	26112028	26112028	1
50	Left Mounting Plate	01332405	01332405	01332405	1
51	Foam Sub-assy of Left Side Plate	12312406	12312403	12312403	1

Above data is subject to change without notice,please refer the SP in global service website.

JF00301348

GREE ELECTRIC APPLIANCES, INC. OF ZHUHAI

Add: West Jinji Rd, Qianshan, Zhuhai, Guangdong, China, 519070
Tel: (+86-756) 8522218 Fax: (+86-756) 8669426
E-mail: gree@gree.com.cn www.gree.com

For continuous improvement in the products, Gree reserves the right to modidy the product specification and appearance in this manual without notice and without incurring any obligations.