GREE
Change for Life

WALL MOUNTED TYPE FAN COIL UNIT SERVICE MANUAL

(GC201411-I)

GREE ELECTRIC APPLIANCES, INC.OF ZHUHAI

CONTENTS

PRODUCT 2

1 MODELS LIST 2

2 NOMENCLATURE OF THE UNIT 3

3 FUNCTION 4

4 PRODUCT DATA 5

CONTROL 12

1 WIRELESS REMOTE CONTROLLER 12

2 OPERATION OF WIRELESS REMOTE CONTROL 13

3 OPERATION OF WIRELESS REMOTE CONTROL 14

4 OPERATION OF WIRELESS REMOTE CONTROL 15

5 CHANGING BATTERIES AND NOTICES 15

6 WIRED CONTROLLER OPERATION (OPTIONAL) 16

INSTALLATION 31

1 INSTALLATION OF THE UNIT 31

2 INSTALLATION DIMENSION DIAGRAM 32

3 INSTALL THE UNIT 33

MAINTENANCE 37

1 TROUBLESHOOTING 37

2 MAINTENANCE INSTRUCTIONS 38

3 WIRING DIAGRAMS 39

4 EXPLODED VIEWS AND SPARE PART LISTS 42

PRODUCT

PRODUCT

1 MODELS LIST

Model Name	Cooling Capacity (W)	Product Code	Air Flow (m^3/h)	Power Supply (V,Ph,Hz)	Remarks
FP-34BA2/A-K	2100	EM55000200	360	220-240V~ 50Hz	
FP-51BA2/A-K	2700	EM55000210	550		
FP-68BA2/A-K	3600	EM55000220	680		
FP-85BA2/A-K	4200	EM55000230	850		
FP-51BWA2/A-K	1500	EM55000240	450		
FP-85BWA2/A-K	2500	EM55000250	650		
FP-34BA2/D-K	2000	EM55001810	360		
FP-51BA2/D-K	2500	EM55001820	550		
FP-68BA2/D-K	3600	EM55001830	680		
FP-85BA2/D-K	4200	EM55001840	850		
FP-34BA2/B-K	2300	EM55001710	360		
FP-51BA2/B-K	2900	EM55001700	550		
FP-68BA2/B-K	3800	EM55001690	680		
FP-85BA2/B-K	4800	EM55001680	850		
FP-34BA3/A-K	2100	EM55001130	360	220-240V~ 50Hz	
FP-51BA3/A-K	2700	EM55001210	550		
FP-68BA3/A-K	3600	EM55001290	680		
FP-85BA3/A-K	4200	EM55001360	850		
FP-34BA3/B-K	2300	EM55001720	360		
FP-51BA3/B-K	2900	EM55001730	550		
FP-68BA3/B-K	3800	EM55001750	680		
FP-85BA3/B-K	4800	EM55001740	850		
FP-51BWA3/A-K	1500	EM55001430	450		
FP-85BWA3/A-K	2400	EM55001510	650		
FP-34BA3/D-K	2000	EM55002000	360		
FP-51BA3/D-K	2500	EM55002010	550		
FP-68BA3/D-K	3600	EM55002020	680		
FP-85BA3/D-K	4200	EM55002030	850		
FP-34BB3/A-K	2100	EM55001180	360	220-240V~ 50Hz	
FP-51BB3/A-K	2700	EM55001260	550		
FP-68BB3/A-K	3600	EM55001340	680		
FP-85BB3/A-K	4200	EM55001410	850		
FP-34BA4/A-K	2100	EM55001140	360	220-240V~ 50Hz	
FP-51BA4/A-K	2700	EM55001220	550		
FP-68BA4/A-K	3600	EM55001300	680		
FP-85BA4/A-K	4200	EM55001370	850		
FP-34BA4/D-K	2000	EM55002040	360		
FP-51BA4/D-K	2500	EM55002050	550		
FP-68BA4/D-K	3600	EM55002060	680		
FP-85BA4/D-K	4200	EM55002070	850		

FP-34BA5/A-K	2100	EM55000260	360	220-240V~ 50Hz	
FP-51BA5A-K	2700	EM55000270	550		
FP-68BA5/A-K	3600	EM55000280	680		
FP-85BA5/A-K	4200	EM55000290	850		
FP-51BWA5/A-K	1500	EM55000300	450		
FP-85BWA5/A-K	2500	EM55000310	650		
FP-34BA5/D-K	2000	EM55002080	360		
FP-51BA5/D-K	2500	EM55002090	550		
FP-68BA5/D-K	3600	EM55002100	680		
FP-85BA5/D-K	4200	EM55002110	850		
FP-34BA5/B-K	2300	EM55001670	360		
FP-51BA5/B-K	2900	EM55001660	550		
FP-68BA5/B-K	3800	EM55001650	680		
FP-85BA5/B-K	4800	EM55001640	850		
FP-85BA2/A-D	5400	EM55001590	1000	208-230V~ 60Hz	
FP-34BA2/B-D	2100	EM55000320	360		
FP-51BA2/B-D	2700	EM55000330	550		
FP-68BA2/B-D	3600	EM55000340	680		
FP-85BA2/B-D	4200	EM55000350	850		
FP-102BA2/B-D	5400	EM55000360	1000		
FP-34BA3/B-D	2100	EM55001760	360	208-230V~ 60Hz	
FP-51BA3/B-D	2700	EM55001800	550		
FP-68BA3/B-D	3600	EM55001770	680		
FP-85BA3/B-D	4200	EM55001780	850		
FP-102BA3/B-D	5400	EM55001790	1000		
FP-34BA5/B-D	2100	EM55001890	360	208-230V~ 60Hz	
FP-51BA5/B-D	2700	EM55001900	550		
FP-68BA5/B-D	3600	EM55001910	680		
FP-85BA5/B-D	4200	EM55001920	850		
FP-102BA5/B-D	5400	EM55001930	1000		

2 NOMENCLATURE OF THE UNIT

FP	-	□	□	□	/	□	-	□
1		2	3	4		4		6

NO.	Description	Options
1	Fan coil	
2	Air flow volume	Number×10 m^3/h
3	Structure type	mounted-B Wall, mounted with water valve-BW
4	Front panel code	One letter +one number
5	Design Sequence	Arranged by A, B,C…
6	Power code	K-220-240V~ 50Hz, D-208-230V~ 60Hz

3 FUNCTION

Function		Fan Coil Unit Service Manual for Evaluation
For Comfortable Air Conditioning	Cooling	YES
	Heating	YES
	Dehumidify	YES
	Air Flow	YES
	Auto Swing	YES
	Sleep and Auto	YES
	With Access Control System	Optional
	Central Control	Optional
	Wired Controller	Optional
	Long Distance Control	Optional
	Timer	YES
	Energy Saving	YES
	Anti Cold Air	YES
	Anti Heat Air	YES
	Waste Heat Blow	YES
	Memory	YES
	Self Diagnosis	YES
	Alarming	YES

4 PRODUCT DATA

Model				FP-34BA2/A-K FP-34BA3/A-K FP-34BA4/A-K FP-34BA5/A-K	FP-51BA2/A-K FP-51BA3/A-K FP-51BA4/A-K FP-51BA5/A-K	FP-68BA2/A-K FP-68BA3/A-K FP-68BA4/A-K FP-68BA5/A-K	FP-85BA2/A-K FP-85BA3/A-K FP-85BA4/A-K FP-85BA5/A-K
Product Code				EM55000200 EM55001130 EM55001140 EM55000260	EM55000210 EM55001210 EM55001220 EM55000270	EM55000220 EM55001290 EM55001300 EM55000280	EM55000230 EM55001360 EM55001370 EM55000290
Air flow volume		High	m^3/h	360	550	680	850
			CFM	212	324	400	500
		Medium	m^3/h	322	413	591	708
			CFM	189	242	347	416
		Low	m^3/h	282	367	532	616
			CFM	166	215	312	362
Capacity	Cooling	W		2100	2700	3600	4200
	Heating	W		3150	4050	5400	6300
Power system	Type	V-Ph-Hz		220-240V~ 50Hz			
	Input	W		50	50	60	60
Water system	Water flow volume	m^3/h		0.4	0.45	0.6	0.7
		GPM		1.76	1.98	2.64	3.08
	Pressure drop	kPa		13	24	44	45
		Ft·WG		4.3	7.9	14.5	14.8
Coil	Type			Aluminum fin-copper tube			
	Operating pressure	MPa		≤1.6MPa	≤1.6MPa	≤1.6MPa	≤1.6MPa
Motor	Type			FN20J-PG		FN20V-PG	
	Capacitor	uF		1	1	1.5	1.5
	Power output	W		20			
Sound pressure level		dB(A)		35	40	43	48
Connection pipe size	Water inlet &outlet	inch		1/2"			
	Condensing water drain	mm		15.6			
Outline dimension (W×D×H)		mm		845×180×275		940×200×298	
Package dimension (W×D×H)		mm		915×255×355		1010×285×380	
Net weight		kg		11		13	
Gross weight		kg		14		17	
Loading quantity		20'GP		365		290	
		40'GP		765		595	
		40'HQ		850		671	
Standard wireless remote controller				YB1FA			

Model				FP-34BB3/A-K	FP-51BB3A-K	FP-68BB3A-K	FP-85BB3/A-K
Product Code				EM55001180	EM55001260	EM55001340	EM55001410
Air flow volume		High	m^3/h	360	550	680	850
			CFM	212	324	400	500
		Medium	m^3/h	322	413	591	708
			CFM	189	242	347	416
		Low	m^3/h	282	367	532	616
			CFM	166	215	312	362
Capacity	Cooling	W		2100	2700	3600	4200
	Heating	W		3150	4050	5400	6300
Power system	Type	V-Ph-Hz		220-240V~ 50Hz			
	Input	W		50	50	60	60
Water system	Water flow volume	m^3/h		0.4	0.45	0.6	0.7
		GPM		1.76	1.98	2.64	3.08
	Pressure drop	kPa		13	24	44	45
		Ft·WG		4.3	7.9	14.5	14.8
Coil	Type			Aluminum fin-copper tube			
	Operating pressure	MPa		≤1.6MPa	≤1.6MPa	≤1.6MPa	≤1.6MPa
Motor	Type			FN20J-PG		FN20V-PG	
	Capacitor	uF		1	1	1.5	1.5
	Power output	W		20			
Sound pressure level		dB(A)		35	40	43	48
Connection pipe size	Water inlet &outlet	inch		1/2"			
	Condensing water drain	mm		15.6			
Outline dimension (W×D×H)		mm		845×180×275		940×200×298	
Package dimension (W×D×H)		mm		915×255×355		1010×285×380	
Net weight		kg		10		12	
Gross weight		kg		12.5		16	
Loading quantity		20'GP		365		290	
		40'GP		765		595	
		40'HQ		850		671	
Standard wireless remote controller				YB1FA			

Model				FP-51BWA2/A-K FP-51BWA3/A-K FP-51BWA5/A-K	FP-85BWA2/A-K FP-85BWA3/A-K FP-85BWA5/A-K
Product Code				EM55000240 EM55001430 EM55000300	EM55000250 EM55001510 EM55000310
Air flow volume		High	m^3/h	450	650
			CFM	265	382
		Medium	m^3/h	383	560
			CFM	225	329
		Low	m^3/h	323	490
			CFM	190	288
Capacity	Cooling	W		1500	2400
	Heating	W		2250	3600
Power system	Type	V-Ph-Hz		220-240V~ 50Hz	
	Input	W		50	60
Water system	Water flow volume	m^3/h		0.28	0.38
		GPM		1.23	1.67
	Pressure drop	kPa		37	60
		Ft·WG		12.2	19.7
Coil	Type			Aluminum fin-copper tube	
	Operating pressure	MPa		≤1.6MPa	≤1.6MPa
Motor	Type			FN20J-PG	FN20V-PG
	Capacitor	uF		1	1.5
	Power output	W		20	20
Sound pressure level		dB(A)		42	50
Connection pipe size	Water inlet &outlet	inch		1/2"	
	Condensing water drain	mm		15.6	
Outline dimension (W×D×H)		mm		845×180×275	940×200×298
Package dimension (W×D×H)		mm		915×255×355	1010×285×380
Net weight		kg		11	13
Gross weight		kg		14	17
Loading quantity		20'GP		365	290
		40'GP		765	595
		40'HQ		850	671
Standard wireless remote controller				YB1FA	

Model				FP-85BA2/A-D
Product Code				EM55001590
Air flow volume		High	m^3/h	1000
			CFM	588
		Medium	m^3/h	840
			CFM	493
		Low	m^3/h	720
			CFM	423
Capacity	Cooling	W		5400
	Heating	W		8500
Power system	Type	V-Ph-Hz		208-230V~ 60Hz
	Input	W		70
Water system	Water flow volume	m^3/h		0.88
		GPM		3.87
	Pressure drop	kPa		63
		Ft·WG		20.7
Coil	Type			Aluminum fin-copper tube
	Operating pressure	MPa		≤1.6MPa
Motor	Type			FN20W-PG
	Capacitor	uF		1.5
	Power output	W		20
Sound pressure level		dB(A)		49
Connection pipe size	Water inlet &outlet	inch		1/2"
	Condensing water drain	mm		15.6
Outline dimension (W×D×H)		mm		940×200×298
Package dimension (W×D×H)		mm		1010×285×380
Net weight		kg		13
Gross weight		kg		17
Loading quantity		20'GP		290
		40'GP		595
		40'HQ		671
Standard wireless remote controller				YB1FA

Model				FP-34BA2/B-D FP-34BA3/B-D FP-34BA5/B-D	FP-51BA2/B-D FP-51BA3/B-D FP-51BA5/B-D	FP-68BA2/B-D FP-68BA3/B-D FP-68BA5/B-D	FP-85BA2/B-D FP-85BA3/B-D FP-85BA5/B-D	FP-102BA2/B-D FP-102BA3/B-D FP-102BA5/B-D
Code				EM55000320 EM55001760 EM55001890	EM55000330 EM55001800 EM55001900	EM55000340 EM55001770 EM55001910	EM55000350 EM55001780 EM55001920	EM55000360 EM55001790 EM55001930
Air flow volume		High	m^3/h	360	550	680	850	1000
			CFM	212	324	400	500	588
		Medium	m^3/h	322	413	591	708	840
			CFM	189	242	347	416	493
		Low	m^3/h	282	367	532	616	720
			CFM	166	215	312	362	423
Capacity	Cooling	W		2100	2700	3600	4200	5400
	Heating	W		3150	4050	5400	6300	8500
Power system	Type	V-Ph-Hz		208-230V~ 60Hz				
	Input	W		50		60		70
Water system	Water flow volume	m^3/h		0.4	0.45	0.64	0.78	0.88
		GPM		1.76	1.98	2.82	3.43	3.87
	Pressure drop	kPa		13	24	44	45	63
		Ft·WG		4.3	7.9	14.5	14.8	20.7
Coil	Type			Aluminum fin-copper tube				
	Operating pressure	MPa		≤1.6MPa				
Motor	Type			FN20X-PG		FN20W-PG		
	Capacitor	uF		1		1.5		
	Power output	W		20				
Sound pressure level		dB(A)		35	40	43	48	49
Connection pipe size	Water inlet &outlet	inch		1/2"				
	Condensing water drain	mm		15.6				
Outline dimension (W×D×H)		mm		845×180×275		940×200×298		
Package dimension (W×D×H)		mm		915×255×355		1010×285×380		
Net weight		kg		11		13		
Gross weight		kg		14		17		
Loading quantity		20'GP		365		290		
		40'GP		765		595		
		40'HQ		850		671		
Standard wireless remote controller				YB1FA(X-FAN)				

Model				FP-34BA2/B-K FP-34BA3/B-K FP-34BA5/B-K	FP-51BA2/B-K FP-51BA3/B-K FP-51BA5/B-K	FP-68BA2/B-K FP-68BA3/B-K FP-68BA5/B-K	FP-85BA2/B-K FP-85BA3/B-K FP-85BA5/B-K	FP-51BWA3/A-K	FP-85BWA3/A-K
Code				EM55001710 EM55001720 EM55001670	EM55001700 EM55001730 EM55001660	EM55001690 EM55001750 EM55001650	EM55001680 EM55001740 EM55001640	EM55001430	EM55001510
Air flow volume		High	m^3/h	360	550	680	850	450	650
			CFM	212	324	400	500	265	383
		Medium	m^3/h	322	413	591	708	383	560
			CFM	189	243	348	417	225	330
		Low	m^3/h	282	367	532	616	328	490
			CFM	166	216	313	363	193	288
Capacity	Cooling	W		2300	2900	3800	4800	1500	2400
	Heating	W		4050	4850	6000	6900	2250	3600
Power system	Type	V-Ph-Hz		220-240V~ 50Hz					
	Input	W		30	30	40	60	50	60
Water system	Water flow volume	m^3/h		0.43	0.49	0.78	0.9	0.28	0.38
		GPM		1.89	2.16	3.43	3.96	1.23	1.67
	Pressure drop	kPa		19	23	49	55	37	60
		Ft·WG		6.4	7.7	16.4	18.4	12.2	19.7
Coil	Type			Aluminum fin-copper tube					
	Operating pressure	MPa		≤1.6MPa					
Motor	Type			FN6B	FN9A	FN13G	FN23A	FN20J-PG	FN20V-PG
	Capacitor	uF		1		1.5		1	1.5
	Power output	W		6	9	13	22	20	20
Sound pressure level		dB(A)		35	40	43	48	42	50
Connection pipe size	Water inlet &outlet	inch		1/2"					
	Condensing water drain	mm		15.6					
Outline dimension (W×D×H)		mm		845×180×275		940×200×298		845×180×275	940×200×298
Package dimension (W×D×H)		mm		915×255×355		1010×285×380		915×255×355	1010×285×380
Net weight		kg		8.8		10.8		11	13
Gross weight		kg		11.8		14.8		14	17
Loading quantity		20'GP		365		290		365	290
		40'GP		765		595		765	595
		40'HQ		850		671		850	671
Standard wireless remote controller				YB1FA(X-FAN)					

Note:

(1) The water working temperature is from 7ºC(44.6ºF) to 60ºC(140ºF).

(2) The temperature exchange efficiency and enthalpy exchange efficiency are tested under these testing conditions as below:

1) Cooling efficiency: air 27ºC (80.6ºF) DB, 19.5ºC (67.1ºF) WB, water temperature in 7ºC (44.6ºF) water out 12ºC(53.6ºF).

2) Heating efficiency: air 21ºC (69.8ºF) DB, Water temperature: 60ºC(140 ºF).

(3) The operating water pressure of the models above is no more than 1.6MPa.

Model				FP-34BA2/D-K FP-34BA3/D-K FP-34BA4/D-K FP-34BA5/D-K	FP-51BA2/D-K FP-51BA3/D-K FP-51BA4/D-K FP-51BA5/D-K	FP-68BA2/D-K FP-68BA3/D-K FP-68BA4/D-K FP-68BA5/D-K	FP-85BA2/D-K FP-85BA3/D-K FP-85BA4/D-K FP-85BA5/D-K
Product Code				EM55001810 EM55002000 EM55002040 EM55002080	EM55001820 EM55002010 EM55002050 EM55002090	EM55001830 EM55002020 EM55002060 EM55002100	EM55001840 EM55002030 EM55002070 EM55002110
Air flow volume		High	m^3/h	360	550	680	850
			CFM	212	324	400	500
		Medium	m^3/h	322	413	591	708
			CFM	189	242	347	416
		Low	m^3/h	282	367	532	616
			CFM	166	215	312	362
Capacity	Cooling	W		2000	2500	3600	4200
	Heating	W		2700	3200	4600	5400
Power system	Type	V-Ph-Hz		220-240V~ 50Hz			
	Input	W		50	50	60	66
Water system	Water flow volume	m^3/h		0.4	0.45	0.6	0.7
		GPM		1.76	1.98	2.65	3.09
	Pressure drop	kPa		20	36	53	70
		Ft·WG		7	12	17	23
Coil	Type			Aluminum fin-copper tube			
	Operating pressure	MPa		≤1.6MPa	≤1.6MPa	≤1.6MPa	≤1.6MPa
Motor	Type			FN20J-PG		FN20V-PG	
	Capacitor	uF		1	1	1.5	1.5
	Power output	W		20			
Sound pressure level		dB(A)		35	40	43	48
Connection pipe size	Water inlet &outlet	inch		1/2"			
	Condensing water drain	mm		15.6			
Outline dimension (W×D×H)		mm		845×180×275		940×200×298	
Package dimension (W×D×H)		mm		915×255×355		1010×285×380	
Net weight		kg		10		12	
Gross weight		kg		12.5		16	
Loading quantity		20'GP		365		290	
		40'GP		765		595	
		40'HQ		850		671	
Standard wireless remote controller				YB1FA(XFAN)			

Note:

(1) The water working temperature is from 7ºC(44.6ºF) to 60ºC(140ºF).

(2) The temperature exchange efficiency and enthalpy exchange efficiency are tested under these testing conditions as below:

1) Cooling efficiency: air 27ºC (80.6ºF) DB, 19ºC (66.2ºF) WB, water temperature in 7ºC (44.6ºF) water out 12ºC(53.6ºF).

2) Heating efficiency: air 20ºC (68ºF) DB, water temperature in 50ºC (122ºF) , water out 40ºC (104ºF).

(3) The operating water pressure of the models above is no more than 1.6MPa.

CONTROL

CONTROL

1 WIRELESS REMOTE CONTROLLER

Names and functions of wireless remote control

Note: Be sure that there are no obstructions between receiver and remote controller; Don't drop or throw the remote control; Don't let any liquid in the remote control and put the remote control directly under the sunlight or any place where it is very hot.

1.1 ON/OFF

ON/OFF button

Press **ON/OFF** button to turn on/off the unit. When the unit is turned off, the Timer, Sleep function will not be retained in memory, but the time will be retained and is still displaying.

1.2 MODE

MODE button

①Press this button, Auto, Cool, Dry, Fan Heat mode can be selected circularly.

②Under Cool mode, the initial value is 24°C(75°F) . Under Heat mode, the initial values 24°C(75°F).

Auto mode is not available in this mode.

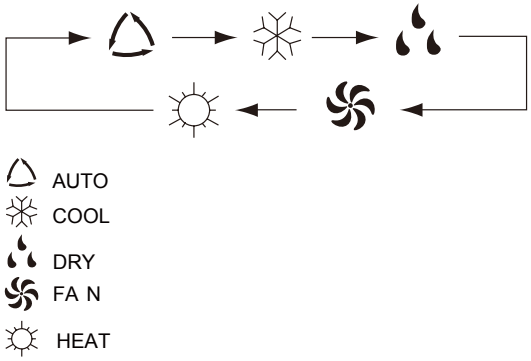

1.3 SLEEP

SLEEP button

Press this button to select Sleep On/Sleep Off. If power is on, Sleep Off is default. If the unit is turned off, the Sleep function setting will be not retained in memory. If Sleep function is on, the mark of Sleep will display. In this mode, the time of timer can be adjusted. Under Fan and Auto modes, this function is not available.

1.4 FAN

FAN button

Press this button, Auto, Low, Medium, High-speed can be circularly selected. After powered on, Auto fan speed is default. Under Dehumidify mode, Low fan speed is default.

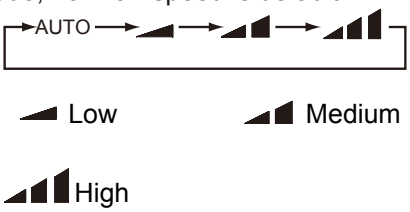

Note: Under the Dry mode, the fan speed isn't adjustable, low fan speed is default.

1.5 CLOCK

CLOCK button

Press Clock button to set the time of clock. When ◷ blinks and displays, you can set the time by pressing + or - button. If no button is pressed within 10 seconds the remote will revert back to the normal display. Press ◷ again to accept the setting. If it is set the first time, 12:00 is the initial value. Note: If mark ◷ displays on the LCD, it means it is the time of clock, if not, it is the time of timer.

1.6 LIGHT

LIGHT button

Press this button to select LIGHT On/Off in the displayer. When the LIGHT On is set, the mark 💡 will be displayed and the indicator light in the displayer will be on. When the LIGHT Off is set, the mark 💡 will disappear and the indicator light will be off.

2 OPERATION OF WIRELESS REMOTE CONTROL

Note: This is a general remote control, it could be used for multiple types (functions) of air conditioners. For some models without the functions specified here, we preserve the right to not to inform exclusively.

2.1 X-FAN

X-FAN button

① Press this button to turn on/off the X-FAN function.

② The function is not available for this function.

2.2 - button

Presetting temperature can be decrease the temperature by 1 degree Celsius once. press and hold for more than two seconds so that we can change the temperature continuously. The minimum and maximum setting range of the temperature is 16 to 30 degree Celsius.

2.3 + button

Press this button increase the temperature by 1 degree Celsius once. Press and hold for more than two seconds so that we can change the temperature continuously. The minimum and maximum setting range of the temperature is 16 to 30 degree.

2.4 TEMP.

TEMP. button

Press this button to select the display of either indoor setting temperature or indoor ambient temperature. When the indoor unit powered on firstly, setting temperature display is default. Change status to to display the ambient temperature. If received control signal in 5 seconds, the display temp.will revert back to setting temperature. When unit is off, indoor setting temperature display is default. Note: This function is only available for certain models.

2.5 TURBO

TURBO button
In Cool or Heat mode, press this button to turn on/off the Turbo function.
Note: This function is not available for this model.

3 OPERATION OF WIRELESS REMOTE CONTROL

Note: This is a general remote control, it could be used for multiple types (functions) of air conditioners. For some models without the functions specified here, we preserve the right to not to inform exclusively.

3.1 SWING UP AND DOWN BUTTON

Press this button to adjust swing angle, which circularly changes as below:

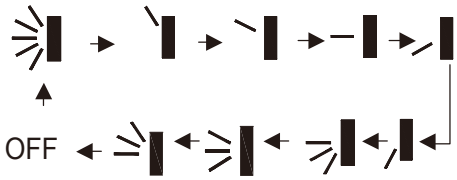

This is a general use remote control. If remote control shows the following three kinds of status that the swing status of main unit will be:

When the guide louver start to swing up and down, if turn off the Swing, the air guide louver will stop at current position.

which indicates the guide louver swings up and down between the five positions.

3.2 TIMER ON BUTTON

Press the TIMER ON button to set the timed On. Press +/- once to increase or decrease the minute by 1 minute. If pressed and held for 2 seconds, the minute will increase or decrease constantly by 1 minute. If held constantly for more than 5 seconds, the minute will begin to change in every 10 minutes. Press TIMER ON again to accept the setting and ON will show besides the time of clock meaning the setting succeeds. Press the TIMER ON again to cancel the setting.

3.3 TIMER OFF BUTTON

Press the TIMER OFF button to set the timed Off. The procedures are similar as above.

4 OPERATION OF WIRELESS REMOTE CONTROL

4.1 Guide for operation – General operation

①Press **SLEEP** button to set the sleep state.

②Press **TIME ON** and **TIME OFF** button to scheduled the unit **ON/OFF**

③Press **LIGHT** button to control on and off the indicator board.(This function maybe not available for some units).

4.2 Guide for operation-Optional operation

①After powered on, press **ON/OFF** button, the unit will start to run. (**Note**: When it is powered off , the guide louver of main unit will close automatically.)

②Press **MODE** button, select desired running mode, or press **COOL** or **HEAT** mode to enter the corresponding operation directly.

③Press + or-button to set the desired temperature.

④Press **FAN** button to set fan speed from **AUTO, FAN ,LOW MID** and **HIGH**.

⑤Press button to select **SWING** mode.

4.3 Operation of wireless remote control

①Press +and - buttons simultaneously to lock or unlock the wireless remote control. If it is locked, the mark will display; when pressing any button, the mark will blink for three times but the air conditioner has no despondence. If unlocked, the mark will disappear.

②Switch between Fahrenheit and Centigrade.When unit is under Off state, press **MODE** and – button simultaneously to switch between °C and °F.

5 CHANGING BATTERIES AND NOTICES

①Slightly to press the place with OPEN , along the arrowhead direction to push the back cover of wireless remote control. (As show in figure)

②Take out the old batteries. (As show in figure)

③Insert two new AAA1.5V dry batteries, and pay attention to the polarity. (As show in figure).

④Attach the back cover of wireless remote control. (As show in figure)

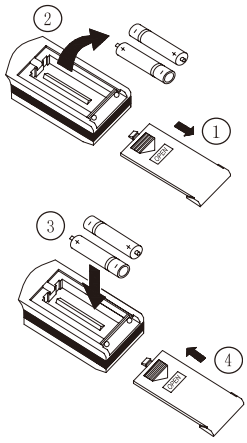

Sketch map for changing batteries

NOTE:

● When changing the batteries, do not use the old or different batteries, otherwise, it can cause the malfunction of the wireless remote control.

● If the wireless remote control will not be used for a long time, please take them out, and don't let the leakage liquid damage the wireless remote control.

● The operation should be in its receiving range.

● It should be placed at where is 1m away from the TV set or stereo sound sets.

● If the wireless remote control can not operate normally, please take them out, after 30s later and reinsert, if they cannot normally run, please change them.

● leakage liquid damage the wireless remote control.

6 WIRED CONTROLLER OPERATION (OPTIONAL)

1 LCD Display

1.1 Symbols on the LCD

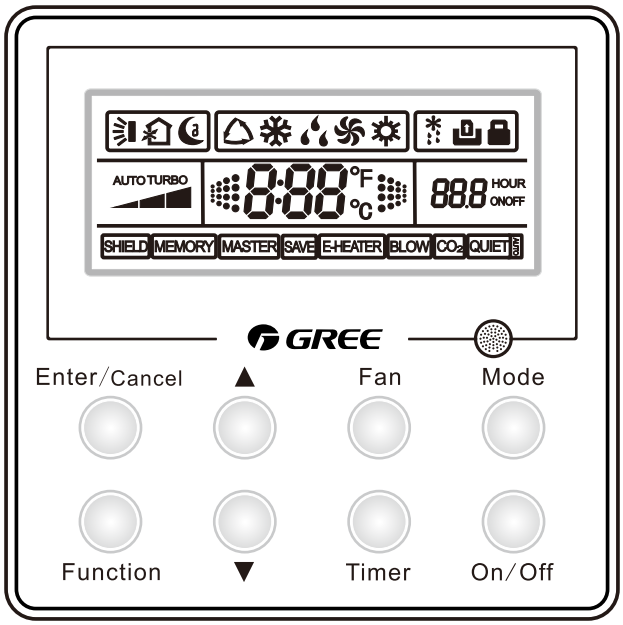

Fig.1 Appearance of the Wired Controller

1.2 Introduction to the Symbols on the LCD

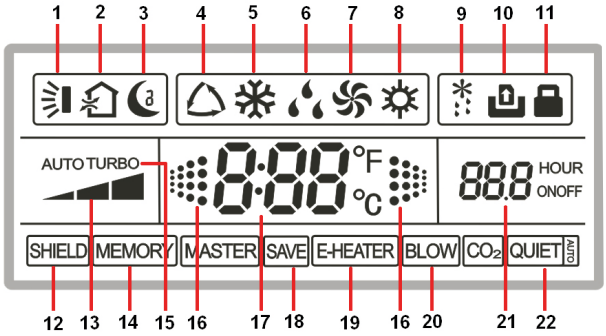

Fig.2 Symbols on the LCD

Table 1 Introduction to the Symbols on the LCD

No.	Symbol	Function Description
1		It indicates the swing function.
2		It indicates the function of air exchange. (It is unavailable for this wired controller.)
3		It indicates the sleeping status.
4		It indicates each running mode of the indoor unit (AUTO mode). (It is unavailable for this wired controller.)
5		It indicates the “Cool” mode.
6		It indicates the “Dry” mode.
7		It indicates the “Fan” mode.
8		It indicates the “Heat” mode.
9		It indicates the defrosting mode. (It is unavailable for this wired controller.)
10		It indicates the gate control status.
11		It indicates the locking status.

12	SHIELD	It indicates the shield status. (It appears when all functions, or the function “On/Off”, “Temp”, “Mode”, or “ Save” is shielded through the Long-distance monitoring System.)
13		It indicates the current fan speed.
14	MEMORY	It indicates the memory function is activated, that is, the unit will back to the previous set status after powered on again.
15	TURBO	It indicates the turbo status.
16		It flashes animatedly when the unit is started and the ambient temperature is displayed.
17	8:88 °F °C	It indicates the ambient temperature/set temperature.
18	SAVE	It indicates the energy saving status.
19	E-HEATER	It indicates that the auxiliary electric heater can be activated.
20	BLOW	It indicates the blow function is activated.
21	88.8 HOUR ONOFF	It indicates the timer status.
22	QUIET AUTO	It indicates the quiet operation status. (including two statuses, “Quiet” and “Auto Quiet”.)
Note: Symbols “MASTER” and “CO2” will not displayed on the LCD of the wired controlled XK26.		

2 Press Keys

2.1 Name of Press Keys

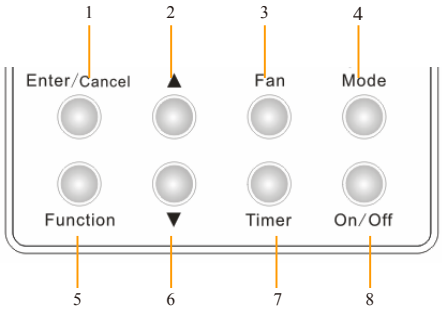

2.2 Introduction to the Functions of the Press Keys

Table 2 Introduction to the Functions of the Press Keys

No.	Press Bottoms	Function Description
1	Enter/Cancel	It is used to select the desired function or cancel the selected function.
2	▲	(1) It is used to adjust the running temperature of the indoor unit among16~30℃ . (2) It is used to adjust the temperature under the energy saving condition among16~30℃ . (3) It is used to adjust the timer among 0.5~24 hours. (4) It is used to switch between the modes of “Quiet” and “Auto Quiet ”.
6	▼	
3	Fan	There are four fan speed options, High, Medium, Low and Auto.
4	Mode	(1) It is used to set the mode of “Cool”,“Dry”, “Fan”, and “Heat”. (2) When the “Save” function is being set, it is used to switch between the mode options of “Heat” and “Cool”. (3) When the “ Timer ” is being set, it is used to switch between the options of “Unit On” and “Unit Off”.
5	Function	It is used to switch the functions of “Swing”, “Sleep”, “Turbo”, “Save”, “E-Heater”, “Blow”, “Quiet”, etc.
7	Timer	It is used to set the timer.
8	On/Off	It is used to start/stop the indoor unit.
4 +2	Mode +▲ (MEMORY)	Under the “Off” status of the unit, press “Mode” and “▲” simultaneously for five seconds to activate or deactivate the “MEMORY” function. (once this function is activated, the unit with power failure will resume the previous set status after powered on again; otherwise it will go to the“Off” status.)
2 +6	▲+▼ (LOCK)	Press “▲” and “▼” simultaneously for five seconds to go to the lock status, in which case the press on any other key will get no response. And another press on “▲” and “▼” for five seconds will quit this status.

5+ 7	Function +Timer (Ambient Temperature Sensor; Anti Cold/Hot Air)	Under the “Off ” status of the unit, press “ Function ” and “ Timer ” simultaneously for five seconds to call out the debugging menu, after that press “ Mode ” to select the desired submenu and press “▲”/“▼” to set the parameter, finally press “ Enter/Cancel ” to save the setting and quit the setting status.
4 +6	Mode +▼	Under the “Off ” status of the unit, press “ Mode ” and “▼”simultaneously for five seconds to switch the Celsius scale and Fahrenheit scale.

3 Installation Instructions

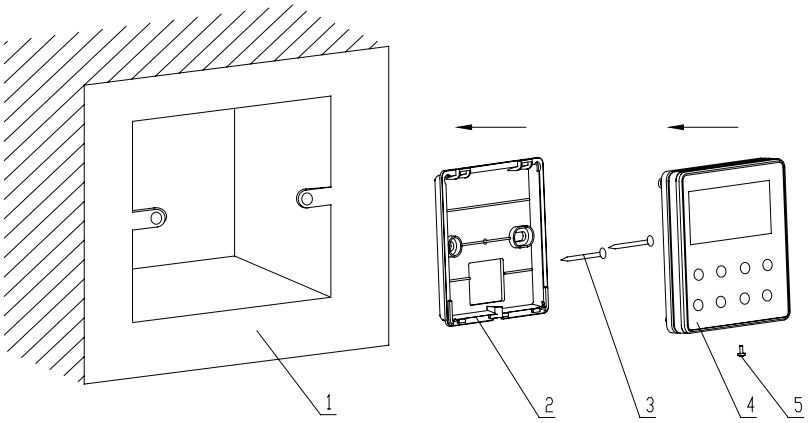

Fig.4 Installation of the Wired Controller

No.	1	2	3	4	5
Name	Installation Box	Base Plate	Screw M4X25	Front Panel	Screw ST2.2X6.5

Fig.4 presents simply how to install the wired controller and please pay special attention to the following instructions.

(1) Please cut off the power supply for all buried power cords in the installation hole and the whole installation must be done without any live part.

(2) Pull out the four-core twisted pairs in the installation hole and let it go through the rectangular hole on the base plate of the wired controller.

(3) Fix the base plate on the wall with screws M4X25.

(4) Let the four-core twisted pairs go through the slot of the wired control and then fix the front panel and base plate together.

(5) Fasten the front panel and base plate with screws ST2.2X6.5.

⚠NOTE

Pay special attention to the electric wiring to prevent that the air conditioner goes out of control owing to the electromagnetic interference.

① The signal line and communication line should be separated with the power cord and the connecting wires between indoor and outdoor units should be with a minimal distance of 20cm, otherwise the communication would go wrong.

② If the air conditioner is installed where it would be affected by electromagnetic interference, the signal line and the communication line must be the shielded twisted pairs.

4 Operation Instructions

4.1 On/Off

- Under the "**Off** " status of the unit, press "**On/Off** " to start the unit.
- Under the "**On**" status of the unit, press "**On/Off**" to stop the unit.
- Fig. 5 is the "**Off**" status when the unit is powered on. Fig.6 show the "**On**" status when the unit is powered on.

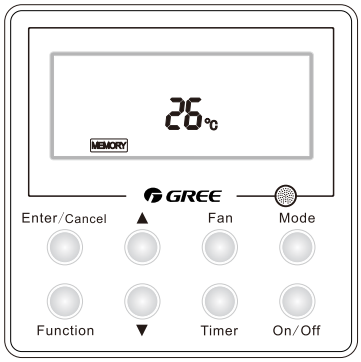

Fig.5 "**Off**" Status

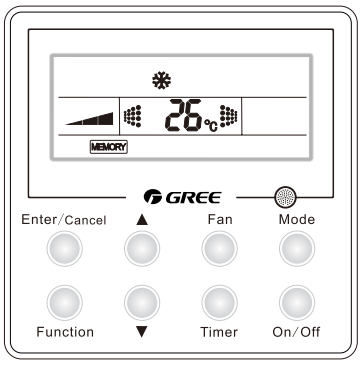

Fig.6 "**On**" Status

4.2 Mode

Under the "**On**" status, each press on "**Mode**" can change the modes circularly as the following order.

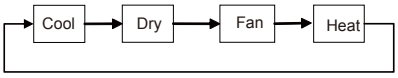

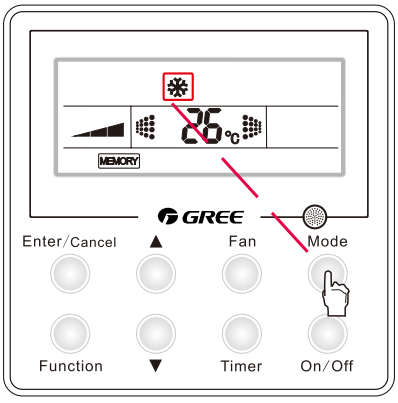

4.3 Temperature Setting

Under the "**On**" status, press "▲" and "▼" to increase or decrease the set temperature. A long-time press will make the temperature go up or down by 1°C/°F per 0.3 seconds.

Temperature Range:16℃～ 30℃ .

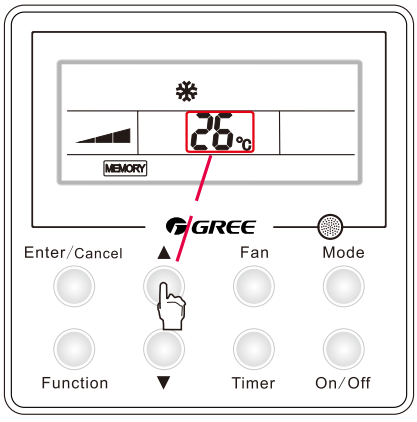

Fig. 8 Temperature Setting

4.5 Swing

How to activate the “**Swing**” function: under the “**On**” status of the unit, press the “**Function**” key to go to the setting status with the symbol“ ”flashing, and then press “**Enter/Cancel**” to make a confirmation and the symbol“ ”will stop flashing.

How to deactivate the “**Swing**” function: under the “**On**” status of the unit, press the “**Function**” key to go to the setting status with the symbol“ ”flashing, and then press “**Enter/Cancel**” to deactivate this function and the symbol will disappear.

See Fig. 10 for how to activate the “**Swing**” function.

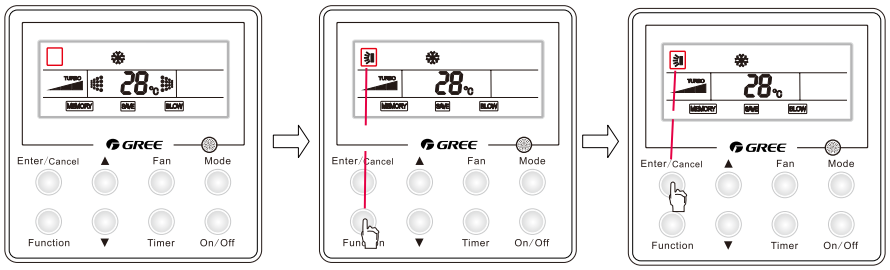

When the “**Swing**” functions is not activated

Press “**Function**” to go to the setting status

Press “**Enter/cancel**” to activate the “**Swing**” function

See Fig.11 for how to deactivate the “**Swing**” function.

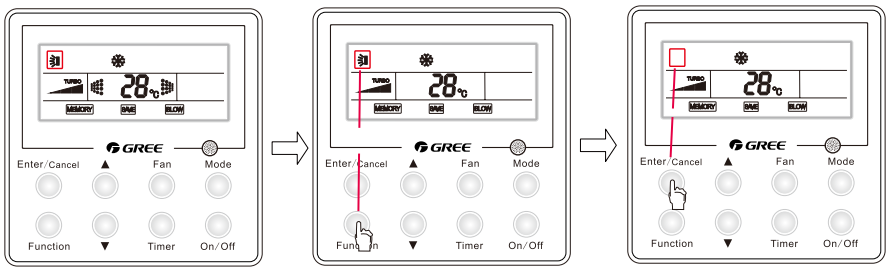

When the “**Swing**” is activated

Press “**Function**” to go to the setting status

Press “**Enter/cancel**” to deactivate the “**Swing**” function

⚠ **NOTE:** If the setting of the swing function is “**Off**”, the swing angle may change after the unit is powered on again.

4.6 Timer

Under the “ **On**” or “**Off**” status, press the “**Timer**” key to set the time when to automatically start or stop the unit.

How to set timer for unit “**On**”: Under the “**Off** ” state of the unit, press the “**Timer**” key with the symbol “ ON ”in the timer zone flashing, and then press “▲” or “▼” to set when to start the unit, after that, press the “ **Timer** ” key again to finish this setting. Before pressing “**Timer**” key to finish the setting for unit “**On**”, it is also available to go to set when to stop the unit by pressing the “**Mode**” key with the symbol “ OFF” flashing, and then press “▲” or “▼” to adjust the time, after that, press the “**Timer**” to finish this setting. Finally, the time displayed is for the unit “ **On** ” while time for unit “**Off**” will not be displayed.

How to set timer for unit “**Off**”: When the unit is “**On**”, press the “**Timer**” key with the symbol “OFF” flashing, and then press “▲” or “▼” to set the time when to stop the unit, after that, press the “**Timer**” key again to finish this setting. Before pressing the “**Timer**” key to finish the setting for unit “**Off**”, it is also available to go to set when to start the unit by pressing the “**Mode**” key with the symbol “ ON ”flashing, and then press “▲” or “▼” to adjust the timer, after that, press the “**Timer**” key again to finish the setting. Finally, the time displayed is for the unit “**Off**” while time for unit “**On**” will not be displayed.

How to cancel the timer:When the timer is set, press “**Timer**” to cancel it and then no time will be displayed on the LCD.

See Fig.12 for how to set the timer under the "**On**" status of the unit.

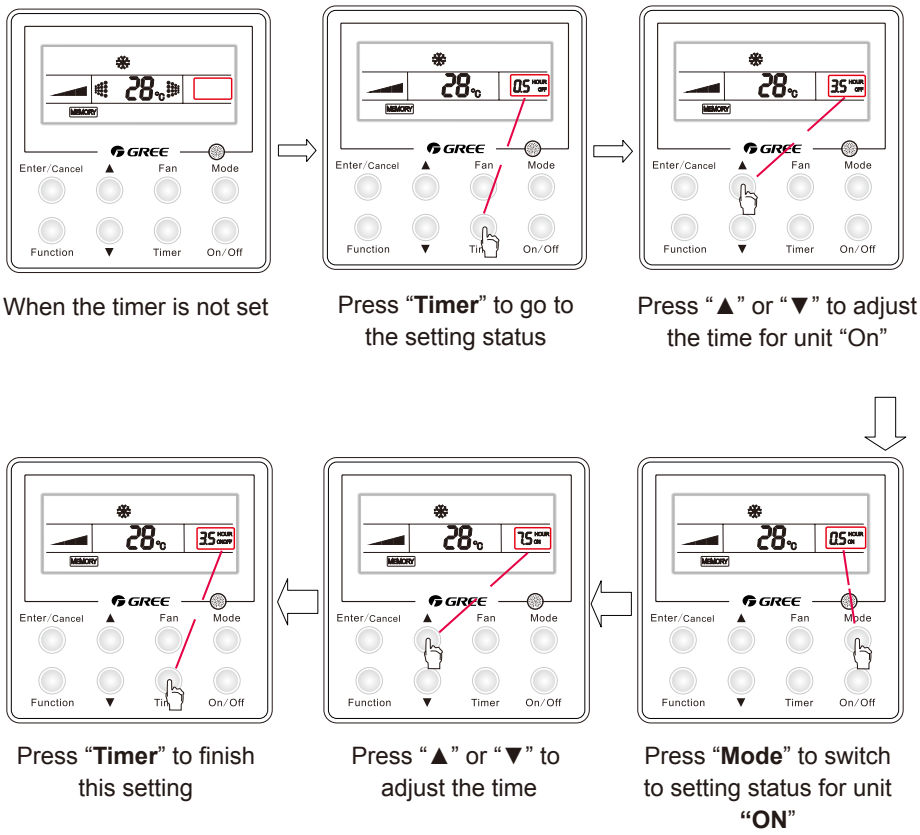

When the timer is not set

Press "**Timer**" to go to the setting status

Press "▲" or "▼" to adjust the time for unit "On"

Press "**Mode**" to switch to setting status for unit "**ON**"

Press "▲" or "▼" to adjust the time

Press "**Timer**" to finish this setting

Fig.12 How to Set the"**Timer**"

See Fig.13 for how to cancel the timer under the "**On**" status of the unit.

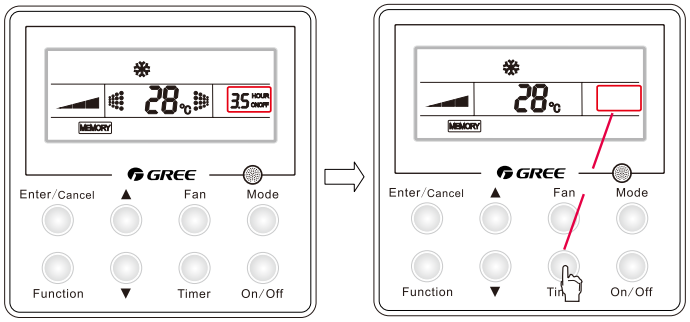

The timer is set when the unit is turned on

Press "**Timer**" to cancel the setting

Fig. 13 How to Cancel the " **Timer** "

Timer Range: 0.5 ～ 24 hours, Each press on "▲"or "▼" will increase or decrease the timer by 0.5 hour. And the long-time press will increase or decrease the timer by 0.5 hour per 0.3 second.

NOTE

① When the unit is "**On**", if the time for unit "**On**" and unit "**Off**" have been set, then only the time for unit " Off " will be displayed on the wired controller. When the unit is "**Off**", if the time for unit "**On**" and unit "**Off**" have been set, then only the timer for unit "On" will be displayed on the wired controller.

② When the unit is "**Off**", the time for unit "**On**" starts as soon as the time for unit "**Off** "ends. When the unit is " **On**", the time for unit "**Off**" starts as soon as the time for unit "**On**" ends.

4.7 Sleep

(1) Sleep Function

1) Under the "**Cool**" and "**Dry**" Mode, when the unit has run for one hour, the set temperature will go up by 1℃ , and then another 1°C in another hour, then the temperature will not change any more.

2) Under the "**Heat**" mode, when the unit has run for one hour, the set temperature will go down by 1°C, and then another 1°C in another hour, and then the temperature will not change any more.

(2) How to activate the "**Sleep**" function:When the unit is "**On**" and the "**Sleep**" function is deactivated, press the "**Function**" key to go to the setting state of the "**Sleep**" function with the symbol" "flashing, after that, press the "**Enter/Cancel**" key to make a conformation and then the symbol " " will stop flashing.

(3) How to deactivate the "**Sleep**" function：When the unit is "**On**" and the " **Sleep** " function is activated, press " **Function**" to go to the setting state of the sleep function with the symbol" "flashing, after that, and then press " **Enter/Cancel**" to make a confirmation and the symbol " " will disappear.

See Fig.14 for how to activate the "**Sleep**" function.

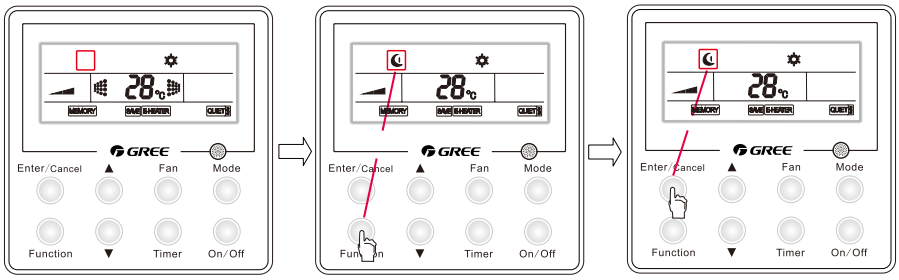

When the "**Sleep**" function is not activated

Press "**Function**" to go to the setting status

Press "**Enter/cancel**" to activate the "**Sleep**" function

Fig.14 How to Activate the " **Sleep**" Function

See Fig.15 for how to deactivate the"**Sleep**"function.

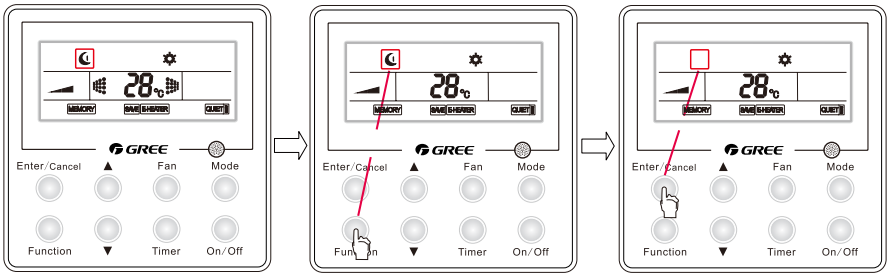

When the "**Sleep**" function is activated

Press "**Function**" to go to the setting status

Press "**Enter/cancel**" to deactivate the "**Sleep**" function

Fig.15 How to Deactivate the "**Sleep**" Function

⚠ **NOTE**

① The default setting for the "**Sleep**" function is "**Off**" when the unit is powered on again after power failure.

② This function is unavailable under the "Fan" mode.

4.8 Turbo

"**Turbo**" function: It is a function to make the temperature of the conditioned air approach the set value rapidly through high-speed running of the fan under either "**Cool**" or "**Heat**" mode.

How to active the "**Turbo**" function: under the "**Cool**" or "**Heat**" mode, when the "**Turbo**" function is "**Off**", press the "**Function**" key to go to the setting status of the "**Turbo**" function with the symbol" TURBO " flashing, after that , press the "**Enter/Cancel**" key to make a confirmation and then the symbol stops flashing.

How to deactivate the "**Turbo**" function:When the unit "**On**" and the "**Turbo**" function is activated, press the "**Function**" key to go to the setting state of the "**Turbo**" function with the symbol" TURBO "flashing, after that, press the "**Enter/Cancel**" key to make a confirmation and then the symbol" TURBO "disappear .

See Fig.16 for how to activate the "**Turbo**" function.

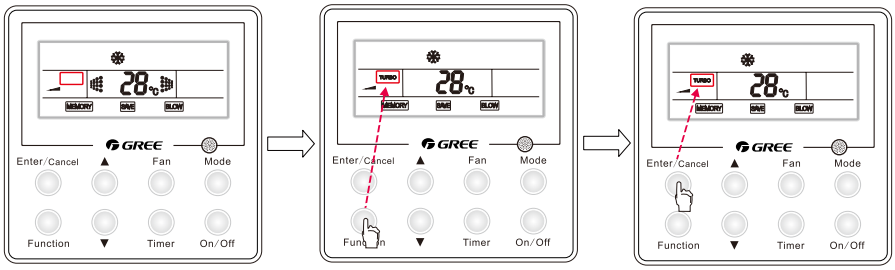

When the "**Turbo**" function is not activated

Press "**Function"** to go to the setting status

Press "**Enter/cancel**" to active the "Turbo" function

See Fig.17 for how to deactivate the"**Turbo**" function.

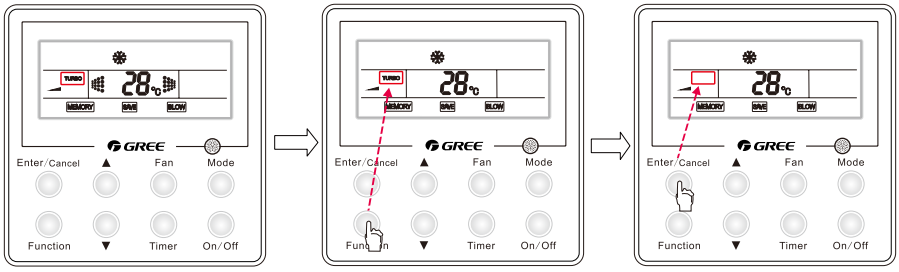

When the "**Turbo**" function is activated

Press "**Function**" to go to the setting status

Press "**Enter/cancel**" to deactivate the "Turbo" function

Fig.17 How to Deactivate the "**Turbo**" Function

⚠ **NOTE:**

① The "**Turbo**" function is deactivated when the unit is powered on after power failure.

② Under the "**Dry**" and "**Fan**" modes, the "**Turbo**" function is unavailable and the symbol " TURBO "will not appear.

③ The "**Turbo**" function will be deactivated automatically when the "**Quiet**" function is activated.

④ The "**Turbo**" function will be deactivated automatically when the "**Fan**" speed is adjusted.

4.9 Save

(1) "**Save**" Function

1) This function is intended to save energy through limiting the temperature range under "**Cool**", "**Dry**" or "**Heat**" mode.

2) The set temperature range for energy saving under the "**Cool**" or "**Dry**" mode is from the set point to 30°C .

3) The set temperature range for energy saving under the "**Heat**" mode is from 16°C to the set point.

(2) How to set the "**Save**" function under the "**Cool**" mode.

1) When the unit is "**On**", press "**Function**" to go to the setting state of the "**Save**" function with the symbol" SAVE " flashing.

2) Press the "▲" or"▼" key to adjust the set temperature.

3) Press the "**Enter/Cancel**" key to activate the "**Save**" function.

(3) How to set the "**Save**" function under the "**Heat**" mode.

1) When the unit is "**On**", press "**Function**" to go the setting state of the "**Save**" function with the symbol" SAVE " flashing.

2) Press "**Mode**" to switch to the setting status for heating.

3) Press "▲"or "▼" to adjust the set temperature.

4) Press "**Enter/Cancel**" to activate the save function.

(4) How to deactivate the "**Save**" function:When the "**Save**" function is activated, press the "**Function**" key to go to the setting state of this function with the symbol" SAVE "flashing, after that, press the"**Enter/Cancel**" key to cancel the "**Save**" function and the symbol will disappear.

See Fig.18 for how to activate the “**Save**” function.

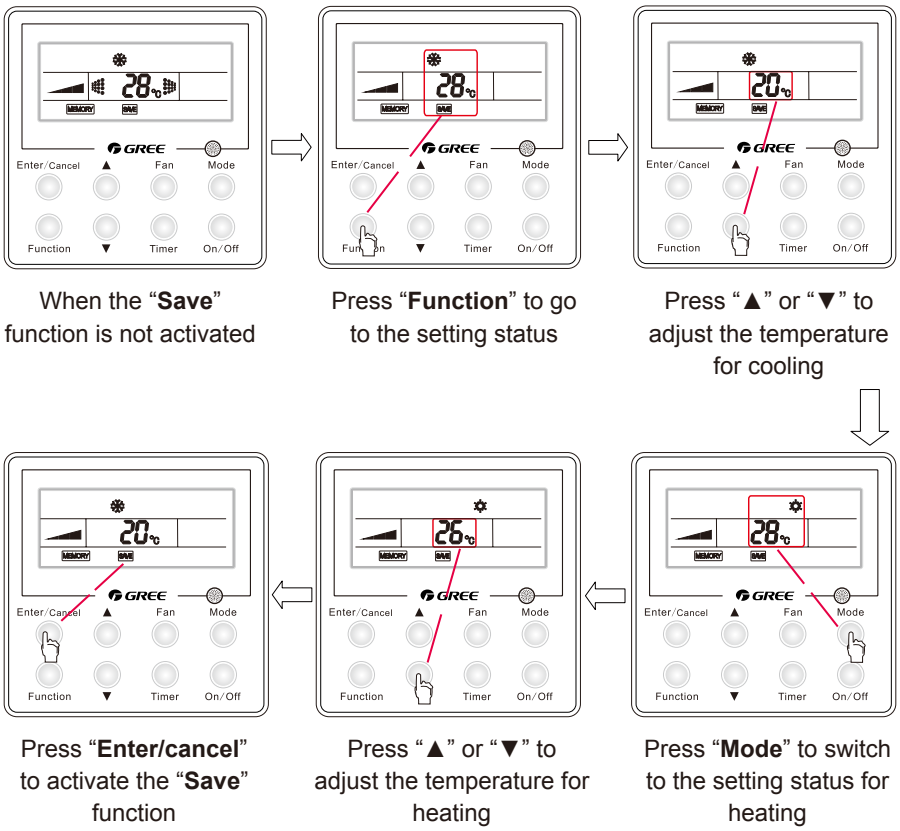

Fig. 18 How to Activate the “**Saving**” Function

See Fig. 19 how to deactivate the “**Save**” function.

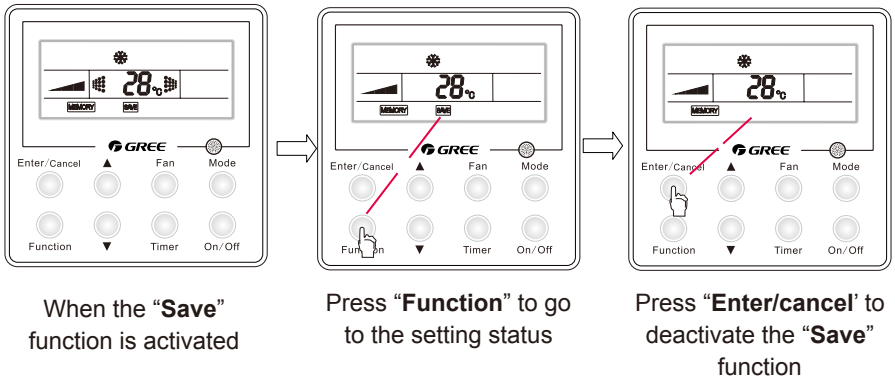

Fig.19 How to Deactivate the “**Save**” Function

⚠ **NOTE**

① The “**Sleep**” function will be deactivated when the “**Save**” function is activated.

② The “**Save**” function will be memorized when the unit is powered on again after power failure.

③ The initial lower temperature limit under the “**Save**” cooling mode is 16°C and the initial upper temperature limit is “ 30°C” under the “**Save**” heating mode.

④ When the “**Save**” function is activated, if the set temperature under each mode is higher than the corresponding temperature limit for energy saving, then the set temperature will forcibly go to the temperature limit.

4.10 E-Heater

"**E-heater**" Function: Under the "**Heat**" mode, the heating efficiency can be improved greatly by activating the auxiliary electric heater.

How to active the "**E-heater**" function: Under the "**Heat**" mode, press the "**Function**" key to go to the setting state with the symbol"E-HEATER " flashing, after that, press "**Enter/Cancel**" to make a confirmation and then the symbol will stop flashing.

How to deactivate the "**E-heater**" function: When the "**E-heater**" function is activated, press the"**Function**" key to go to the setting state of the "**E-heater**" function with the symbol" E-HEATER "flashing, after that, press the " **Enter/Cancel**" key to deactivate this function and then the symbol" E-HEATER "will disappear.

See Fig. 20 for how to activate the "**E-heater**" function.

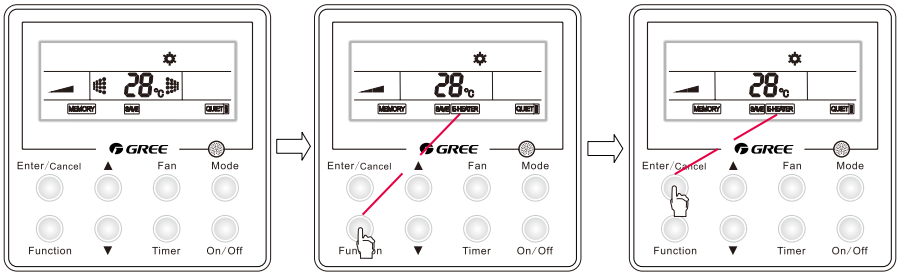

Press "**Function**" to go to the setting status

When the "**E-heater**" function is not activated

Press "**Enter/cancel**" to activate the "**E-Heater**" function

Fig. 20 How to Activate the "**E-heater**" function

See Fig.21 for how to deactivate the "**E-heater**" function.

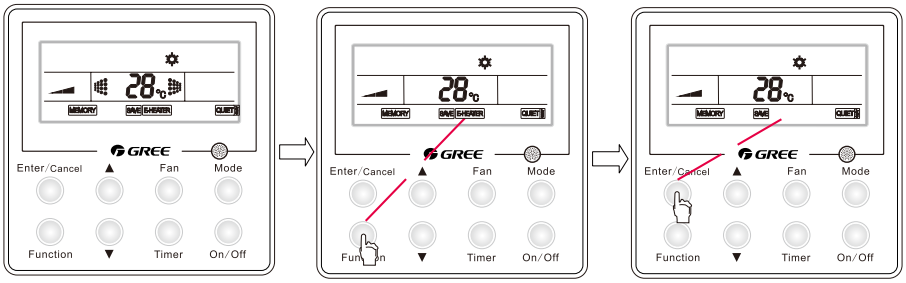

When the "**E-heater**" function is activated

Press "**Function**" to go to the setting status

Press "**Enter/cancel**" to dectivate the "**E-Heater**" function

Fig.21 How to Deactivate the "**E-heater**" Function

⚠ NOTE:

① The "**E-heater**" function is unavailable under the "**Cool**", "**Dry**" or "**Fan**" mode and the symbol " E-HEATER " will not be displayed on the LCD under those modes.

② When the unit is switched to the "**Heat**" mode, the default status of the "**E-heater**" function is "**On**".

4.11 Blow

"**Blow**" Function:It is intended to dry the moisture inside the evaporator after the unit is turned on to prevent mould growing there.

How to activate the "**Blow**" function:Under the "**Cool**" and "**Dry**" mode, when the "**Blow**" function is not activated, press the "**Function**" key to go to the setting state with the symbol" BLOW "flashing, and then press the key "**Enter/Cancel**" to make a confirmation.

How to deactivate the "**Blow**" function:When the unit is "**On**" and the "**Blow**" function is activated, press " **Function**" function to go to the setting state with the symbol " BLOW "flashing, and then press the "**Enter/Cancel**" key to deactivate this function.

See Fig. 22 for how to activate the “**Blow**” function.

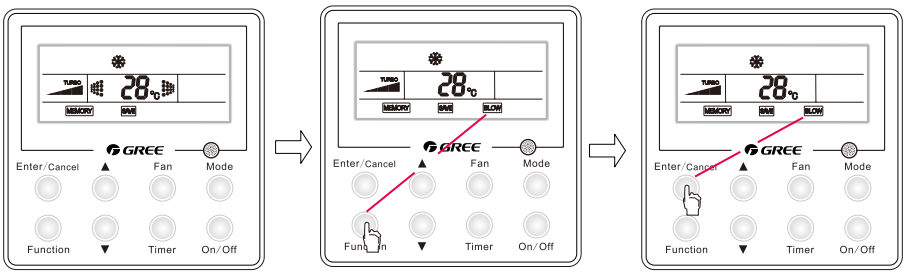

When the “**Blow**” function is not activated

Press “**Function**” to go to the setting status

Press “**Enter/cancel**” to activate the “**Blow**” function

Fig. 22 How to Activate the “**Blow**” Function

See Fig. 23 for how to deactivate the “**Blow**” function .

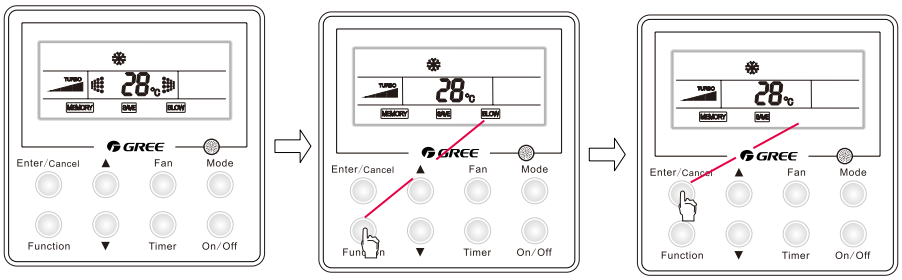

When the “**Blow**” function is activated

Press “**Function**” to go to the setting status

Press “**Enter/cancel**” to deactivate the “Blow” function

Fig.23 How to Deactivate the “**Blow**” Function

4.12 Quiet

There are two options for this function: “**Quiet**” and “**Auto Quiet**”.

How to activate the “**Quiet**” / “**Auto Quiet**” function: Press the “**Function**” key to go to the setting state with the symbol“ QUIET ”or“ QUIET AUTO ”flashing, then , press “▲” or “▼” to switch between “**Quiet**” and“**Auto Quiet**”, after that, press the “ **Enter/Cancel** ” key to make a confirmation.

How to deactivate the “**Quiet**”/“**Auto Quiet**” function : when the “**Quite**”/“**Auto Quiet**” function is activated, press the “**Function**” key to go to the setting state with the symbol“ QUIET ”or“ QUIET AUTO ” flashing, after that, press “ **Enter/Cancel**” to deactivate the “**Quiet**” function.

See Fig.24 for how to activate the “**Quite**”/ “**Auto Quiet**” function.

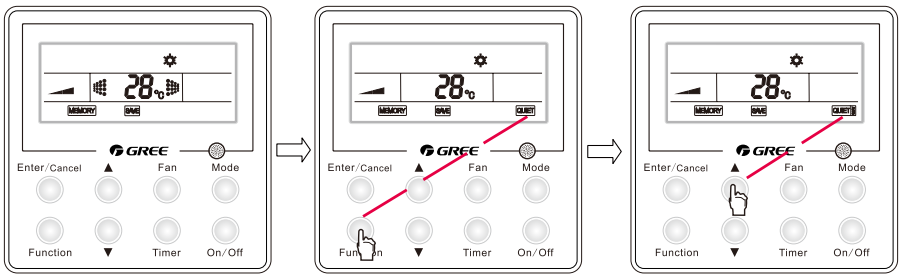

When the “**Quiet**”/ “**Auto Quiet**” function is not activated

Press “**Function**” to go to the setting status

Press “▲” or “▼” to select “**Quiet**” or “**Auto Quiet**”

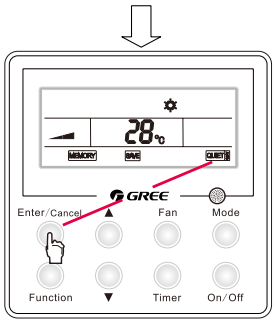

Press "**Enter/cancel**" to activate this function

Fig. 24 How to Activate the "**Quiet**"/ "**Auto Quiet**" Function

See Fig. 25 for how to activate the "**Quiet**" function.

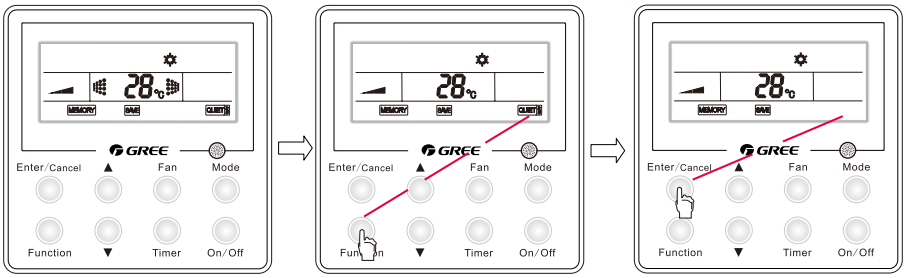

When the "**Quiet**"/"**Auto Quiet**" function is activated

Press "**Function**" to go to the setting status

Press "**Enter/cancel**" to deactivate this function

Fig.25 How to Deactivate the " **Quiet** "/" **Auto Quiet** " Function

⚠ **NOTE:**

① The fan speed is unadjustable when the "**Quiet**" function is activated .

② When the "**Auto Quiet**" function is activated, the unit will run into the "**Quiet**" status according to the actual indoor ambient temperature and user-set temperature. In this case, the fans speed is adjustable .

③ Under the "**Auto Quiet**" mode, the fan speed can only go down. And the "**Quiet**" function will quit automatically if the fan speed is adjusted manually .

④ The "**Quiet**" function is unavailable under the "**Fan**" and "**Dry**" modes. And the default status of the function is "**Off**" when the unit is powered on again .

⑤ The "**Turbo**" function will be deactivated automatically when the "**Quiet**" function is activated.

4.13 Debugging

When the unit is "**Off**", press "**Function**" and " **Timer**" simultaneously for five seconds to call out the debugging menu, after that , press "**Mode**" to select the desired submenu and then press "▲" or "▼" to set the parameter.

4.13.1 Ambient Temperature Sensor

Under the debugging condition, press the "**Mode**" to adjust the display to "**00**" in the temperature zone , and press "▲" or "▼" to adjust the display in the timer zone, for which there are three options :

- The indoor ambient temperature is the return air temperature . ("**01**" displayed)
- The indoor ambient temperature is the temperature which the wired controller senses. ("**02**" displayed)
- The return air temperature sensor is selected under the "**Cool**", "**Dry**" or "**Fan**" mode . The temperature sensor of the wired controller is selected under the "**Heat**" mode . ("**03**" displayed)

4.13.2 Anti Cold/Hot Air Function

Under the debugging condition, press the "**Mode**" key to switch the display in the temperature zone to "**03**" and press " ▲ " or " ▼ " to switch the display in the timer zone. For the later display, there are two options: " **01**" indicating the unit with the anti cold/hot air functions, and "**02**" indicting the unit without the anti cold/hot air function .

Please press "**Enter/Cancel**" to save the setting and quit the setting status; otherwise if there is no operation in 20 seconds after the system responds to the last operation on the press button, and then the system will quit this setting status and back to the normal "**Off**" status with the current setting not saved.

4.14 Other Functions

4.14.1 Lock

Lock Function:It can lock the keypad and then the press on any other keys will get no response.

Whatever the unit is "**On**" or "**Off**", press "▲" and "▼" simultaneously for five seconds to activate the "**Lock**" function and the symbol" 🔒 "will appear. And then another press on them will deactivate this function and the symbol" 🔒 "will disappear.

The "**Lock**" function will be memorized when the unit is powered on again after power failure.

4.14.2 Memory

"**Memory**" Function: When the "**Memory**" function is activated for the wired controller, the unit resume the status before powered off when it is powered on again; otherwise the unit will go to the "**Off**" status when it is powered on again.

How to switch to the "**Memory**" function: When the unit is "**Off**", press " **Mod**e " and "▲" simultaneously for five seconds to activate/deactivate the "**Memory**" function. Once the function is activated, the symbol will be displayed on the LCD.

NOTE: Please don't cut down the power after the content changes in five seconds, or it may fail to save the content.

4.14.3 Gate Control

When the gate control is effective, the unit will work with the card inserted in and will be shut down with the card drawn out.

When the card is drawn out, the unit will be shut down and the symbol" 🪪 "will appear; when the card is inserted in again, the symbol" 🪪 "will disappear and the unit will run as the previous state.

On condition that the "**Memory**" function is activated, when the wired controller is powered on again, the unit with the card inserted in will back to the previous state and the unit with the card drawn out will go to"**Off**" status.

On condition that the "**Memory**" function is deactivated, the unit will go to the "**Off**" state when the wired controller is powered on again.

NOTE:

① The card being inserted or not, the long-distance monitoring is always enabled.

② The displayed symbol" 🪪 "indicates that the unit can not be controlled through the keys.

4.14.4 Switchover between Celsius and Fahrenheit Scale

When the unit is "**Off**", it is able to switch the Celsius scale and Fahrenheit scale by pressing "**Mode**" and "▼" simultaneously for five seconds.

4.14.5 Long-distance Shield

On condition that all functions, or the function "**On/Off**", "**Mode**", "**Temperature**" or "**Save**" is shielded, the press on any key of the wired controller or the operation through the wireless controller will be ineffective but with the corresponding symbol flashing. For instance, if the "**Mode**" is shielded, then the operation to switch the current mode "**Cool**" to "**Heat**" would fail.

29 INSTALLATION

5. Error Display

When a system error arises, its error code will be displayed in the temperature zone. While if several errors occurs at the same time, their codes will be displayed circularly.

Once an error arises, please shut down the unit and contact the professional technician.

See Fig.26 for the communication error.

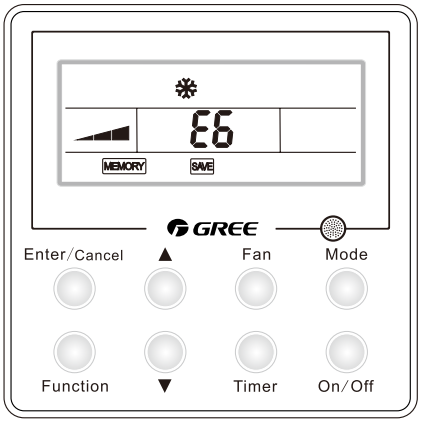

Fig. 26 Communication Error

Error list:

Error Code	Error Description
E0	Water pump error.
E6	Communication error.
E9	Water overflow protection.
F0	Error of Indoor ambient temperature sensor of return air inlet.
F1	Temperature sensor error of evaporator.
F5	Temperature sensor error of wired controller.
EH	Auxiliary electrical heater error.
C5	Jumper error.
H6	PG motor error.

INSTALLATION

INSTALLATION

1 INSTALLATION OF THE UNIT

1.1 Important Notices

(1) The unit installation work must be done by qualified personnel according to the local rules and this manual.

(2) Before installing, please contact with local authorized maintenance center, if unit is not installed by the authorized maintenance center, the malfunction may not be solved, due to discommodious contacts.

(3) When removing the unit to the other place, please firstly contact with the authorized Maintenance Center in the local area.

1.2 Basic Requirements For Installation Position

Install in the following place may cause malfunction. If it is unavoidable contact with service center please:

(1) Place where strong heat sources, vapors, flammable gas or volatile object are emitted.

(2) Place where high-frequency waves are generated by radio equipment, welders and medical equipment.

(3) Place where a lot of salinities such as coast exists.

(4) Place where the oil (machine oil) is contained in the air.

(5) Place where a sulfured gas such as the hot spring zones is generated.

(6) Other place with special circumstance.

1.3 Indoor Unit Installation Position Selection

(1) The air inlet and outlet vent should be far away from the obstruction.

(2) Select a position where the condensing water can be easily drained out.

(3) Select a location where the children can not reach.

(4) Select the place that is strong enough to withstand the full weight and vibration of the unit. And will not increase the noise.

(5) Be sure to leave enough space to allow access for routine maintenance. The height of the installed location should be 250cm or more from the floor.

(6) Select a place about 1m or more away from TV set or any other electric appliances.

(7) Select a place where the filter can be easily taken out.

(8) Make sure that the unit installation should accord with installation dimension diagram requirements.

(9) Do not use the unit in the immediate surroundings of a laundry a bath a shower or a swimming pool.

1.4 Safety Requirements For Electric Appliances

(1) The power supply should be used the rated voltage and AC exclusive circuit, the power cable diameter should be satisfied.

(2) Don't drag the power cable emphatically.

(3) It should be reliably earthed, and it should be connected to the special earth device, the installation work should be operated by the professional.

The air switch must have the functions of magnetic tripping and heat tripping, in order to protect the short circuit and overloading.

(4) The min. distance from the unit and combustive surface is 1.5m.

(5) The appliance shall be installed in accordance with national wiring regulations.

(6) An all-pole disconnection switch having a contact separation of at least 3mm in all poles should be connected in fixed wiring.

Note:

①Make sure that the Live wire or Zero line as well as the earth wire in the family power socket can not be wrong connected, there should be reliable and no short circuit in the diagram.

②Wrong connection may cause fire.

1.5 Earthing requirements

(1) Air conditioner is type I electric appliance, thus please do conduct reliable earthing measure.

(2) The yellow-green two-color wire in air conditioner is earthing wire and cannot be used for other propose. It cannot be cut off and be fix it by screw, otherwise it would cause electric shock.

(3) The earth resistance should accord to the National Criterion.

(4) The user power must offer the reliable earthling terminal. Please don't connect the earthing wire with the following place:

① Tap water pipe ② Gas pipe ③ Contamination pipe.

④ Other places that professional personnel consider them unreliable.

(5) The model and rating values for fuses according the silk print on fuse cover or related PCB board.

2 INSTALLATION DIMENSION DIAGRAM

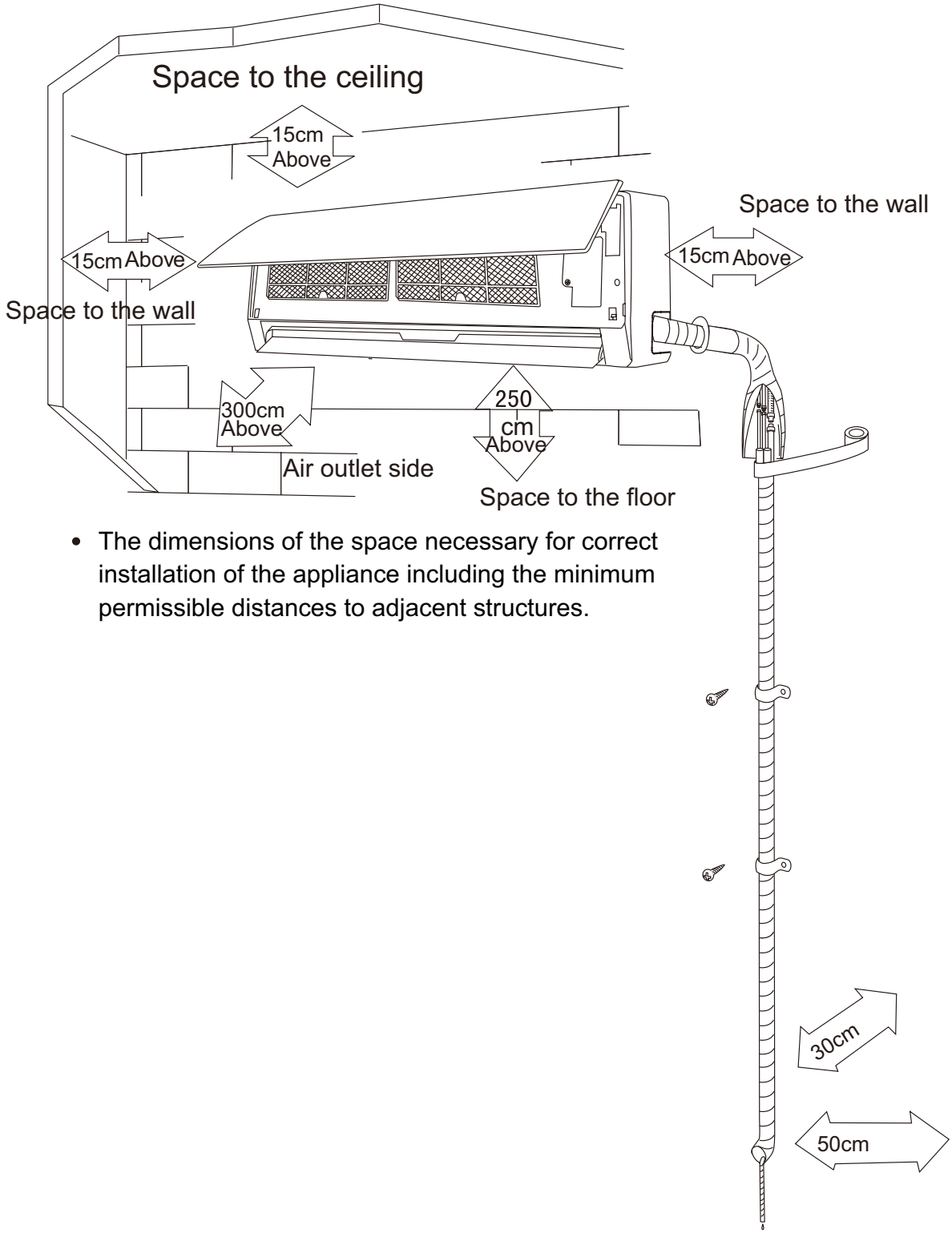

- The dimensions of the space necessary for correct installation of the appliance including the minimum permissible distances to adjacent structures.

3 INSTALL THE UNIT

3.1 Install the rear panel

(1) Always mount the rear panel horizontally. Due to the water tray of indoor unit has been adopted the both-way drainage design, the outlet of water tray should be adjusted slightly down when installing, that is taking the outlet of the water tray as the center of a circle, the included angle between the evaporator and level should be 0 or more, that is good for condensing water drainage.

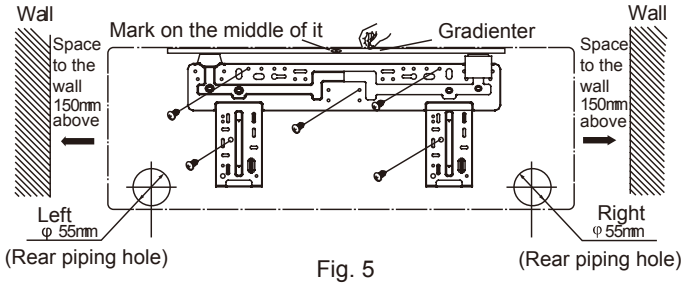

Fig. 5

(2) Fix the rear panel on the wall with screws. (Where is pre-covered with plastic granula)

(3) Be sure that the rear panel has been fixed firmly enough to withstand the weight of an adult of 60kg, further more, the weight should be evenly shared by each screw.

3.2 Install the piping hole

①Ake the piping hole (Φ55) in the wall at a slight downward slant to the outdoor side.

②Insert the piping-hole sleeve into the hole to prevent the connection piping and wiring from being damaged when passing through the hole.

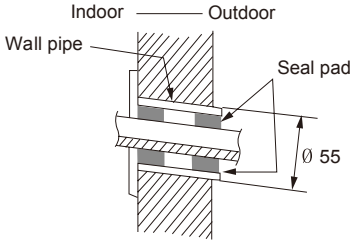

3.3 Install the water drainage pipe

(1) For well draining, the drain hose should be placed at a downward slant.

(2) Do not wrench or bend the drain hose or flood its end by water.(As show in Fig.6)

(3) When the long drainage hose passing through indoor, should wrap the insulation materials.

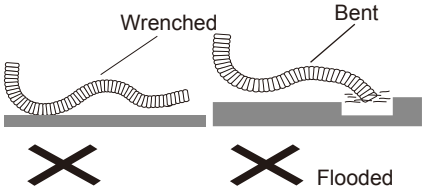

Fig.6

Note:

When connecting the electric wire if the wire length is not enough, please contact with the authorized service shop to buy a exclusive electric wire that is long enough and the joint on the wire are not allowed.

● The electric wiring must be correctly connected, wrong connection may cause spare parts malfunction.

● Tighten the terminal screw in order to prevent loose.

● After tighten the screw, slight pull the wire and confirm whether is it firm or not.

● If the earth wire is wrong connection, that may cause electric shock.

● The cover plate must be fixed, and tighten the connection wire, if it is poor installed, that the dust, moisture may enter in or the connection terminal will be affected by outside force, and will cause fire or electric shock.

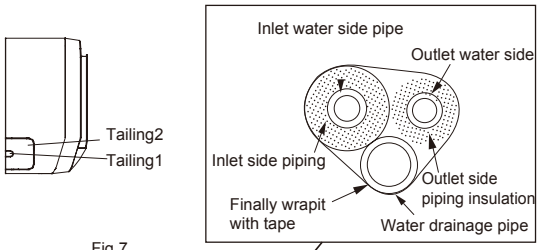

Fig.7

3.4 Install the unit

● The piping can be lead out from right, right rear, left ,left rear.

(1) When routing the piping and wiring from the left or right side of indoor unit, cut off the tailings from the chassis in necessary(Show in Fig.7)

1) Cut off the tailings 1 when routing the wiring only;

2) Cut off the tailings 1 and tailings 2 when routing both the wiring and piping.

(2) Take out the piping from body case, wrap the piping electric wire, water pipe with tape and pull them through the piping hole (As show in Fig.8)

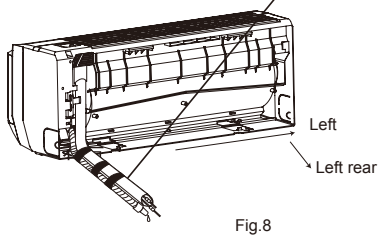

Fig.8

(3) Hang the mounting slots of the unit on the upper tabs of the rear panel and check if it is firm enough.(As show in Fig.9)

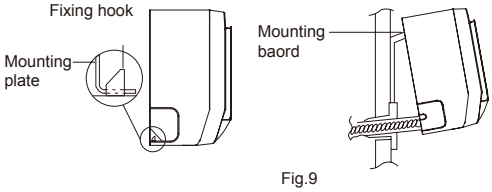

Fig.9

(4) The height of the installed location should be 2.5 m or more from the floor.

3.5 Install the connection pipe

(1) Align the center of the piping flare with the relevant valve.

(2) Screw in the flare nut by hand and then tighten the nut with spanner and torque wrench refer to the following:

Hex nut diameter	Tightening torque (N•m)
Φ6	15~20
Φ 9.52	31~35
Φ 12	50~55
Φ 16	60~65
Φ 19	70~75

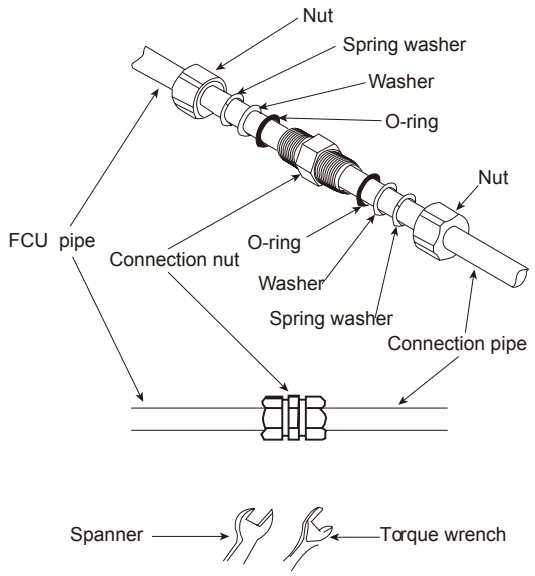

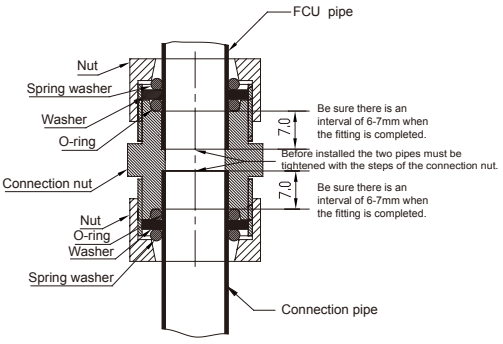

3.6 The way of operating vent valve

3.6.1 Check after installation

When necessary to operating the vent valve, the steps should operate as follow:

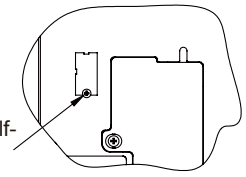

1.Screw out the self-mounted screw.

Fig.10

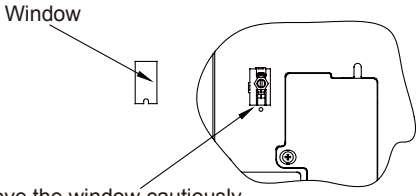

2.Remove the window cautiously.

Fig.11

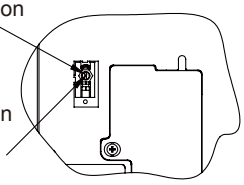

3.Screw out the valve piston counter-clockwise 3~4 ring cautiously.（around “ON" direction in the window）

Fig.12

4.Run the FCU

After running,fit in the parts as follow.

(1)Screw the valve piston clockwise properly before operation.（around “OFF" direction in the window）

(2)Reinstall the window.

(3)screw the self-mounted screw.

3.7 Check after installation and test operation

3.7.1 Check after installation

Items to be checked	Possible malfunction
Has it been fixed firmly?	The unit may drop, shake or emit noise.
Is heat insulation sufficient?	It may cause condensation and dripping.
Is water drainage well?	It may cause condensation and dripping.
Is the voltage in accordance with the rated voltage marked on the nameplate?	It may cause electric malfunction or damage the part.
Is the electric wiring and piping connection installed correctly and securely?	It may cause electric malfunction or damage the part.
Has the unit been connected to a secure earth connection?	It may cause electrical leakage.
Is the power cord specified?	It may cause electric malfunction or damage the part.
Is the inlet and outlet been covered?	It may cause insufficient cooling(heating) capacity.

35 INSTALLATION

3.7.2 Test Operation

(1) Before test operation
1) Do not switch on power before installation is finished completely.
2) Electric wiring must be connected correctly and securely.
3) All the impurities such as scraps and thrums must be cleared from the unit.

(2) Test operation method
1) Switch on power, press "ON/OFF" button on the wireless remote control to start the operation.
2) Press MODE button, to select the COOL, HEAT, FAN to check whether the operation is normal or not.

MAINTENANCE

MAINTENANCE

1 TROUBLESHOOTING

1.1 CAUTION

Don't attempt to repair the air conditioner by yourself. It can cause an electric shock or fire. Please check the following items before asking for repair, it can save your time and money.

Phenomenon	Troubleshooting
Not operate immediately when the air conditioner is restarted.	Once the air conditioner is stopped, it will not operate in approximately 3minutes to protect itself
There's unusual smell blowing from the outlet after operation is started.	The unit has no peculiar smell by itself. If has, that is due to the smell accumulated in the ambient. Solution method: Cleaning the filter. If problem still has, so need to clean air conditioner. (Please contact with the authorized maintenance center.)
Sound of water flow can be heard during the operation.	The sound is due to water flowing they are not malfunctions.
In COOL mode, sometimes the mist emitted from the air outlet vent.	When the indoor temperature and humidity are very high, this phenomenon would happen. This is caused by the room air is swiftly cooled down. After running for a while, indoor temperature and humidity will fall down, the mist will die away.
Creaking noise can be heard when start or stop the unit.	This is caused by the deformation of plastic due to the changes of temperature.
The unit can not run.	Has the power been shut down? Is power plug loosed? Is the circuit protection device tripped off or not? Is voltage higher or lower? (Tested by professionals) Is the TIMER correctly used?
Cooling(Heating) efficiency is not good.	Is Temp setting suitable? Were inlet and outlet vents obstructed? Is filter dirty? Are the windows and doors clothed? Did Fan speed set at low speed? Is there any heat sources in the room?
Wireless remote control is not available.	The unit is interfered by abnormal or frequent functions switchover occasionally the controller cannot operate. At this time, you need to pull out of the plug, and reinsert it. Is it in its receiving range? Or obstructed? To check the voltage in wireless remote control inside is charged, otherwise to replace the batteries. Whether the wireless remote control is damaged.
If water leakage in the room.	The air humidity is on the high side. Condensing water over flowed. The connection position of indoor unit drainage pipe is loosed.
Indoor unit cannot deliver air.	In HEAT mode, when the temperature of indoor heat exchanger is very low, that will stop deliver air in order to prevent cool air. (Within 2min) In COOL mode, when the temperature of indoor heat exchanger is very high, that will stop deliver air in order to prevent heat air. (Within 2min)
Moisture on air outlet vent.	If unit is running under the high humidity for a long time, the moisture will be condensed on the air outlet grill and drip off.
Cooling LED blinks, display F0.	F0:Ambient temperature sensor is open or short-circuit. Please cut off power at first and then check whether the wires of ambient temperature sensor have been disconnected with the main board. If there are disconnected, please insert the ambient temperature sensor and then check whether it can run normally after power on. If it still can't run normally; please replace the ambient temperature sensor.
Cooling LED blinks, display F1.	F1: Aluminum fin-copper tube temperature sensor is open or short-circuit. Please cut off power at first and then check whether the wires of tube temperature sensor have been disconnected with the main board. If there are disconnected, please insert the tube temperature sensor and then check whether it can run normally after power on. If it still can't run normally, please replace the tube temperature sensor.
Running LED blinks, displays C5.	C5: Malfunction protection of the jumper cap. Please cut off power at first and then check whether the cap jumper has been inserted well.
Running LED blinks, displays H6.	H6: No motor feed back. Please cut off power at first and then restart the unit to check whether it can run normally or not.

● Immediately stop all operations and plug out, contact the dealer in following situations.

● There is harsh sound during operation.
● The terrible odors emitted during operation.
● Water is leaking in the room.
● Air switch or protection switch often breaks.
● Carelessly splash water or something into the unit.
● There is an abnormal heat in power supply cord and power plug.

2 MAINTENANCE INSTRUCTIONS

Forcibly pull the panel for a specific angle from the two ends of the front panel according to the arrow direction. Then pull the air filter downwards to remove it. (See Fig. a Mount the healthy filter onto the air filter,(as shown in Fig. b). If the air filter cannot be installed, please mount the healthy filter on the front case. (as shown in Fig. c)

Mount the air filter properly along the arrow direction in Fig. d, and then close the panel cover.

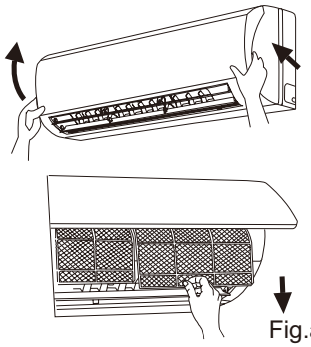

Fig.a

Fig.b

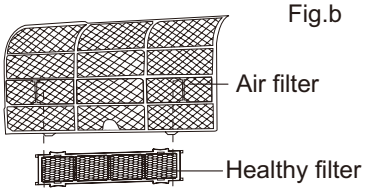

2.1 Cleaning and Maintenance

Take out the healthy filter before cleaning and reinstall it after cleaning according to the installation instruction. Pay special attention to that silver ion filter can't be cleaned with water, while active carbon, photocatalyst , low temperature conversion (LTC) catalyst, formaldehyde eliminator, catechin or mite killing filter can, but can't with brush or hard things. Dry it in the shade or sun after cleaning, but not by wiping.

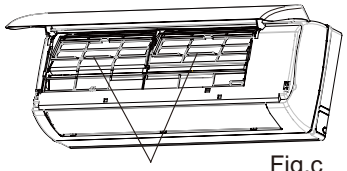

Fig.c

2.2 Service Life

The healthy filter commonly has its usage lifetime for one year under normal condition. As for silver ion filter, it is invalid when its surface becomes black (green).

This supplementary instruction is provided for reference to the unit with healthy filter. If the graphics provided herein is different from the physical goods, the latter one shall prevail. The quantity of healthy filters shall be based on the actual delivery.

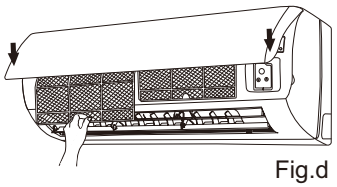

Fig.d

3 WIRING DIAGRAMS

FP-34BA2/A-K, FP-51BA2/A-K, FP-34BA3/A-K, FP-51BA3/A-K, FP-68BA3/A-K, FP-85BA3/A-K, FP-34BB3/A-K, FP-51BB3/A-K, FP-68BB3/A-K, FP-85BB3/A-K, FP-34BA4/A-K, FP-51BA4/A-K, FP-68BA4/A-K, FP-85BA4/A-K, FP-34BA5/A-K, FP-51BA5/A-K, FP-68BA5/A-K, FP-85BA5/A-K, FP-34BA2/B-D, FP-51BA2/B-D, FP-68BA2/B-D, FP-85BA2/B-D, FP-102BA2/B-D, FP-34BA3/B-D, FP-51BA3/B-D, FP-68BA3/B-D, FP-85BA3/B-D, FP-102BA3/B-D,FP-34BA2/D-K,FP-51BA2/D-K,FP-68BA2/D-K,FP-85BA2/D-K,FP-34BA3/D-K,FP-51BA3/D-K,FP-68BA3/D-K,FP-85BA3/D-K,FP-34BA4/D-K,FP-51BA4/D-K,FP-68BA4/D-K,FP-85BA4/D-K,FP-34BA5/D-K,FP-51BA5/D-K,FP-68BA5/D-K,FP-85BA5/D-K.

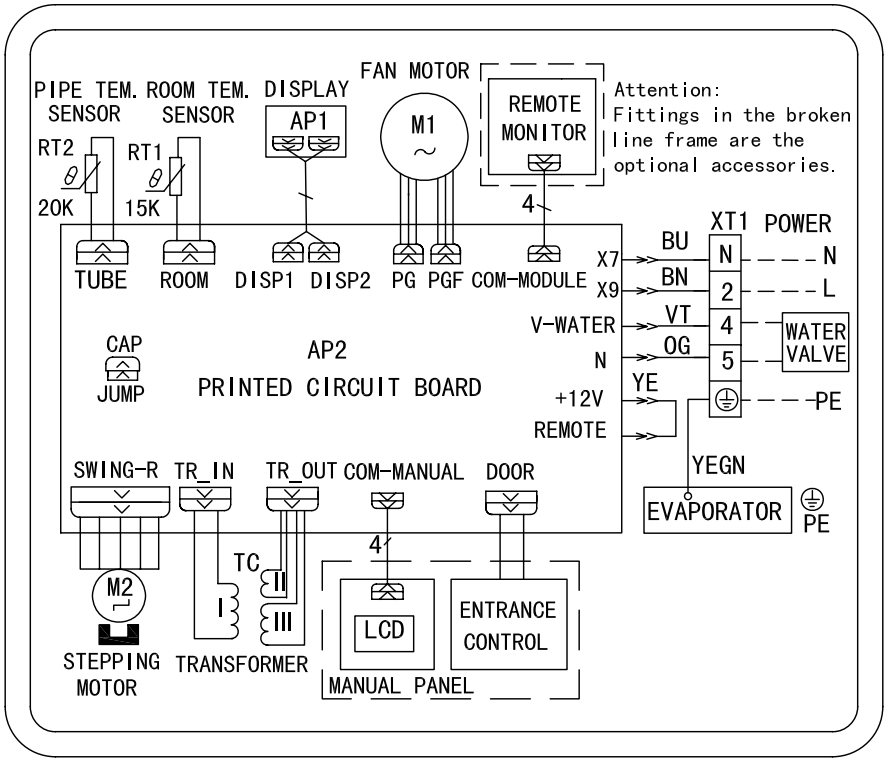

FP-68BA2/A-K, FP-85BA2/A-K

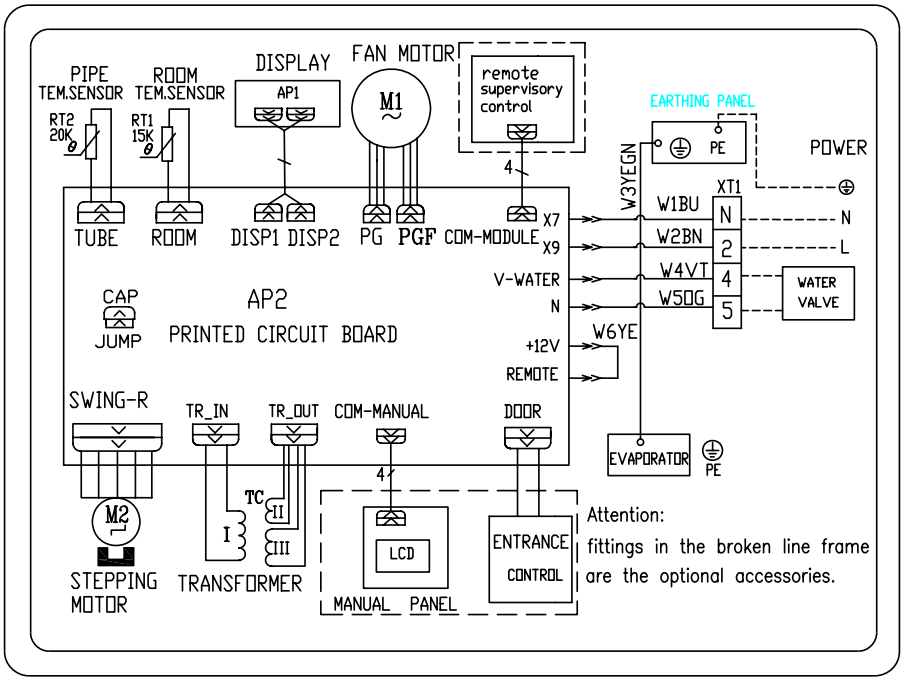

FP-51BWA2/A-K, FP-51BWA3/A-K, FP-85BWA3/A-K, FP-51BWA5/A-K, FP-85BWA5/A-K

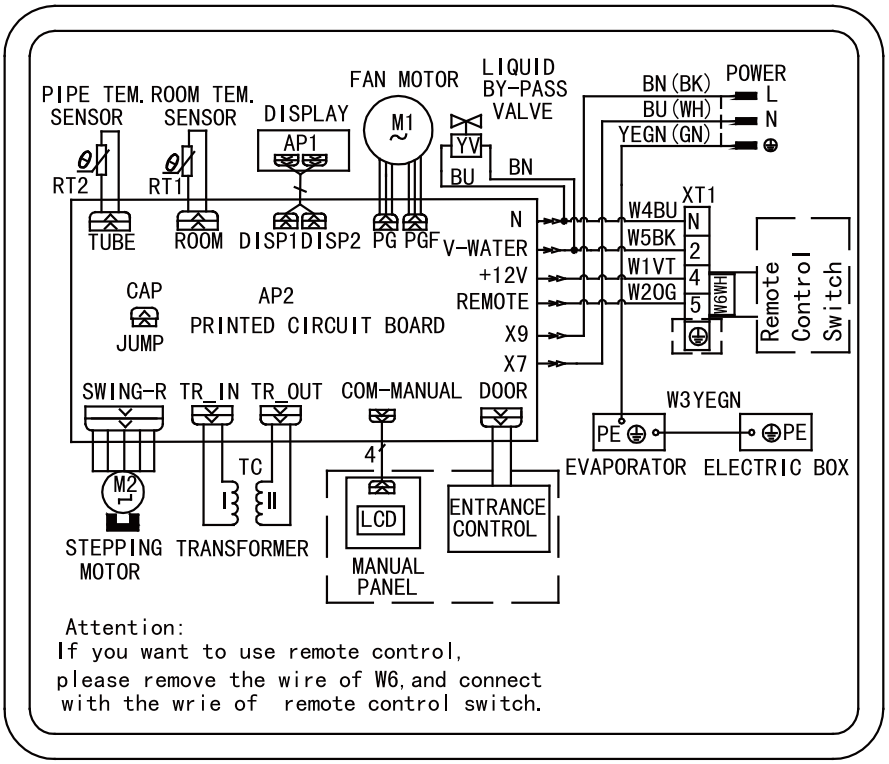

FP-85BWA2/A-K

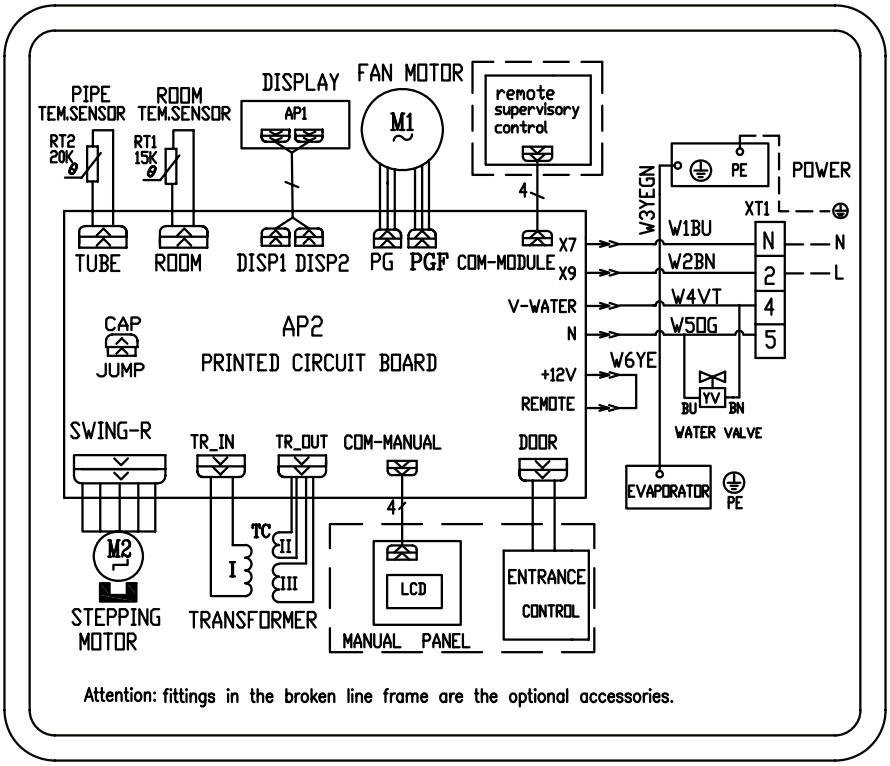

FP-34BA2/B-K, FP-51BA2/B-K, FP-68BA2/B-K, FP-85BA2/B-K, FP-34BA5/B-K, FP-51BA5/B-K, FP-68BA5/B-K, FP-85BA5/B-K, FP-34BA3/B-K, FP-51BA3/B-K, FP-68BA3/B-K, FP-85BA3/B-K

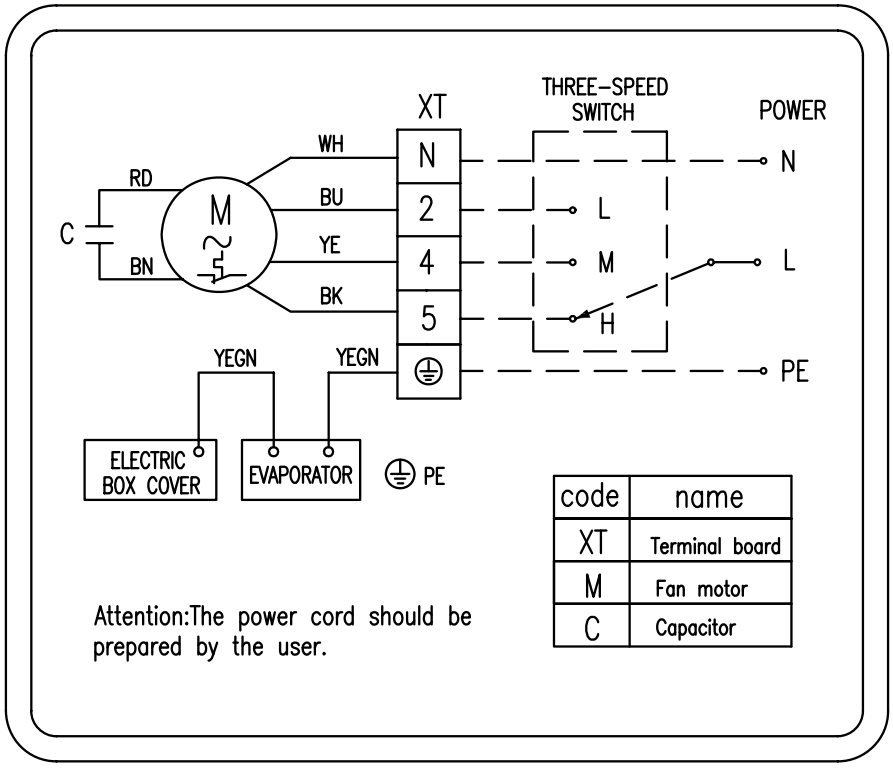

FP-34BA5/B-D, FP-51BA5/B-D, FP-68BA5/B-D, FP-85BA5/B-D, FP-102BA5/B-D

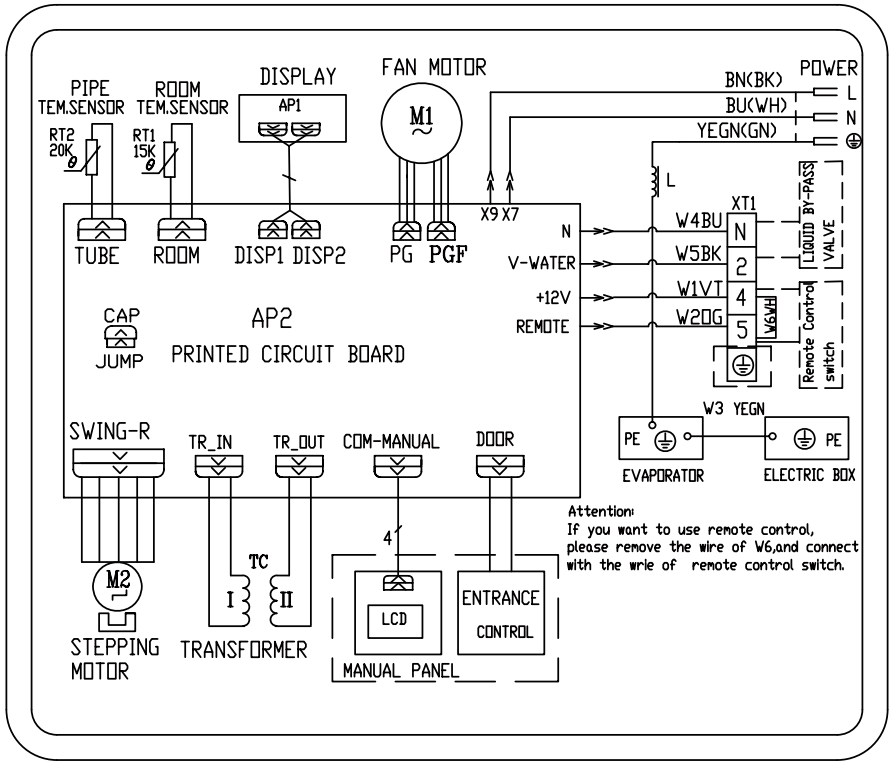

4 EXPLODED VIEWS AND SPARE PART LISTS

Model: FP-34BA2/A-K (EM55000200); FP-51BA2/A-K (EM55000210); FP-34BA3/A-K (EM55001130); FP-51BA3/A-K (EM55001210) ; FP-34BA4/A-K (EM55001140) ; FP-51BA4/A-K (EM55001220); FP-34BA5/A-K (EM55000260) ; FP-51BA5/A-K (EM55000270) ; FP-34BB3/A-K (EM55001180) ; FP-51BB3/A-K (EM55001260) ; FP-34BA2/D-K (EM55001810) ; FP-51BA2/D-K (EM55001820); FP-34BA3/D-K (EM55002000) ; FP-51BA3/D-K (EM55002010); FP-34BA4/D-K (EM55002040); FP-51BA4/D-K (EM55002050) ; FP-34BA5/D-K (EM55002080);FP-51BA5/D-K (EM55002090).

Exploded Views:

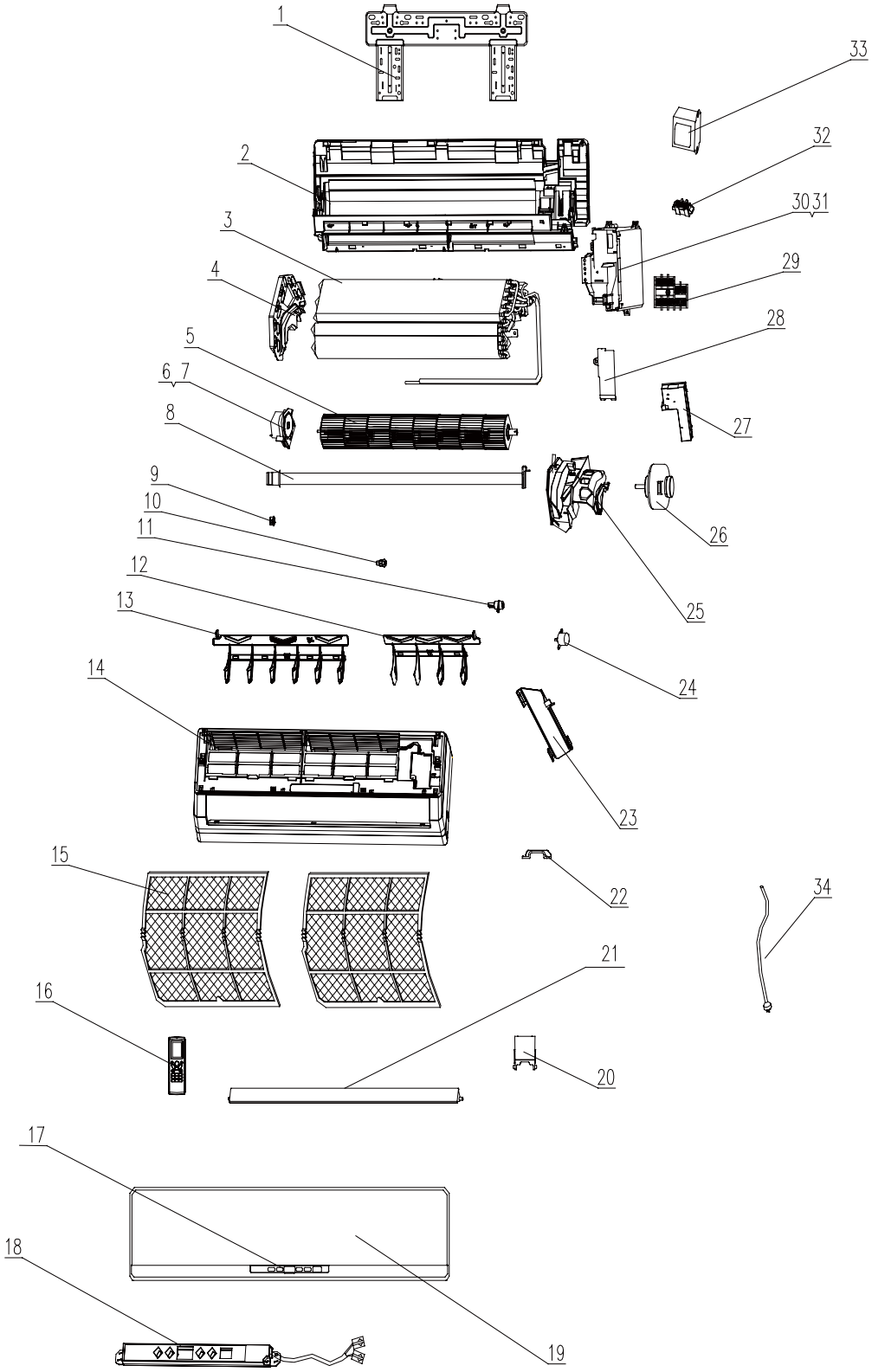

Spare parts list:

No.	Name of part	Part code	Quantity	No.	Name of part	Part code	Quantity
1	Wall-Mounting Frame	01252021	1	18	Display Board	30565056 ① ② 30565007 ③ ④ 30565012 ⑤ ⑥ 30565026 ⑦ ⑧ 30565037 ⑨ ⑩	1
2	Rear Case	2220245401	1	19	Front Panel	20012150S ① ② 20012122S ③ ④ 20012153S ⑤ ⑥ 20012199S ⑦ ⑧ 20012202 ⑨ ⑩	1
3	Evaporator Assy	01126406	1	20	Screw Cover	24252016	1
4	Evaporator Support	24212091	1	21	Guide Louver	10512157	1
5	Cross Flow Fan	10352017	1	22	Wire Clamp	71010003	1
6	Ring of Bearing	26152022	1	23	Rear Clamp	26112164	1
7	Bearing cushion rubber base	76512203	1	24	Motor MP24AA	1521210801	1
8	Volute tongue	26112163	1	25	Motor Clamp	26112161	1
9	Left Axile Bush	10512037	1	26	Motor FN20J-PG	150120874	1
10	Crank	10582070	1	27	Electric Box Cover 1	20122103	1
11	Axile Bush	10542008	1	28	Covering Plate2	20122075	1
12	Swing Louver1	10512156	1	29	Terminal Board	42010262	1
13	Swing Louver2	10512155	1	30	Electric Box	20112082	1
14	Front Case	20012123	1	31	Main PCB Z5P251A	30225043	1
15	Filter	1112220401	2	32	Jumping Connector	4202300117 ① ③ ⑤ ⑦⑨	1
16	Remote Control YB1FA	30510041	1			4202300125 ② ④ ⑥ ⑧ ⑩	
17	Decorate Piece	20192265 ① ② 22432230 ③ ④ 2019223601 ⑤ ⑥ 20192247 ⑦ ⑧ 27219900310 ⑨ ⑩	1	33	Transformer 48X26G	43110233	1
				34	Power Cable	400220112	1

Note:

① is part of FP-34BA2/A-K or FP-34BA2/D-K; ② is part of FP-51BA2/A-K or FP-51BA2/D-K; ③ is part of FP-34BA3/A-K or FP-34BA3/D-K; ④ is part of FP-51BA3/A-K or FP-51BA3/D-K; ⑤ is part of FP-34BA4/A-K or FP-34BA4/D-K; ⑥ is part of FP-51BA4/A-K or FP-51BA4/D-K;

⑦ is part of FP-34BA5/A-K or FP-34BA5/D-K; ⑧ is part of FP-51BA5/A-K or FP-51BA5/D-K; ⑨ is part of FP-34BB3/A-K;

⑩ is part of FP-51BB3/A-K.

Model:FP-51BWA2/A-K(EM55000240); FP-51BWA5/A-K(EM55000300).
Exploded Views:

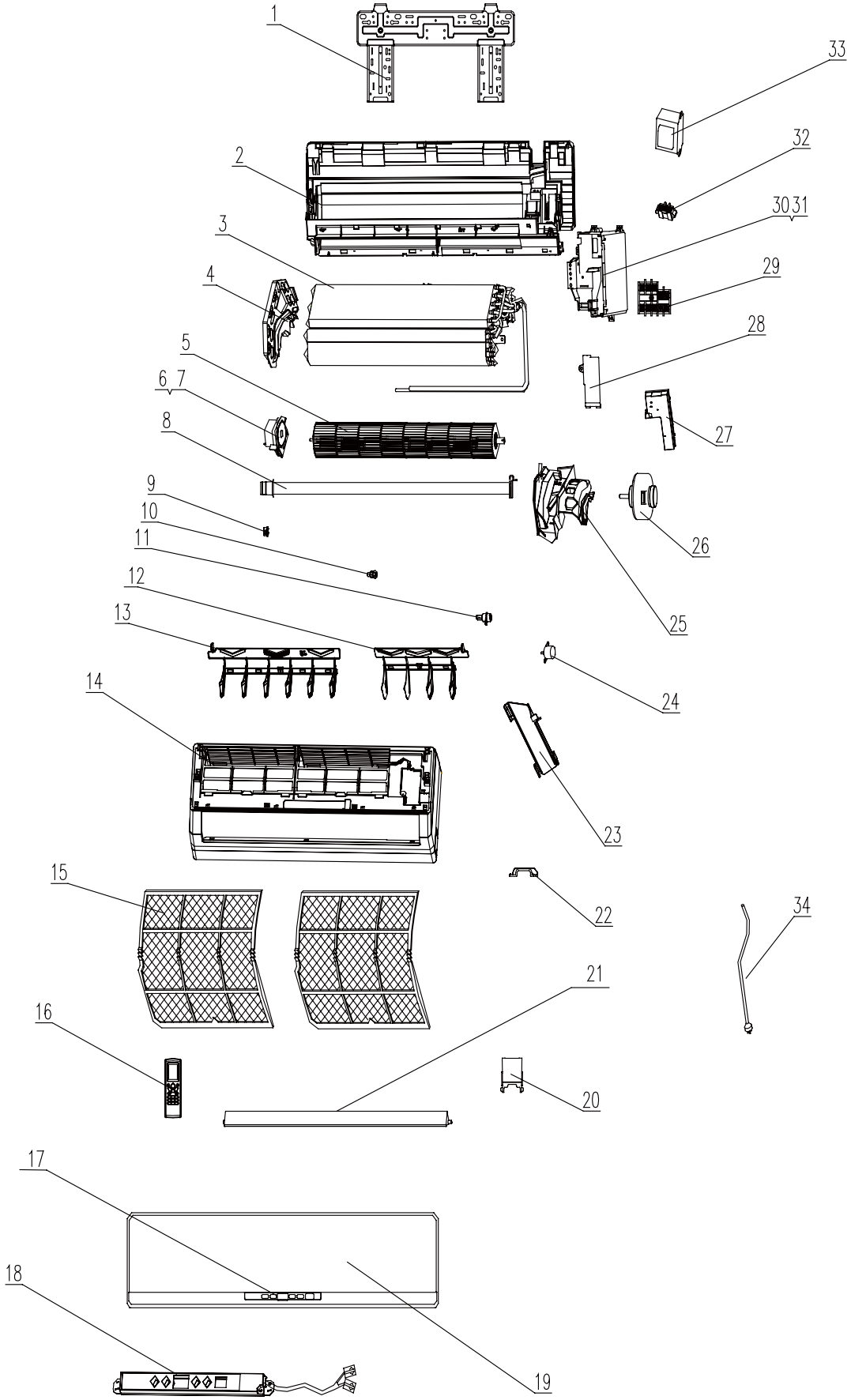

Spare parts list:
FP-51BWA2/A-K(EM55000240); FP-51BWA5/A-K(EM55000300).

No.	Name of part	Part code	Quantity	No.	Name of part	Part code	Quantity
1	Wall-Mounting Frame	01252013 ①	1	18	Display Board	30565056 ①	1
		01252021 ②				30565026 ②	
2	Rear Case	2220245401	1	19	Front Panel	20012150S	1
3	Sufer Cooler Assy	1126406	1				
4	Evaporator Support	24212091	1	20	Screw Cover	24252016	1
5	Cross Flow Fan	10352017	1	21	Guide Louver	10512157	1
6	Ring of Bearing	26152022	1	22	Wire Clamp	71010003	1
7	Bearing cushion rubber base	76512203	1	23	Rear Clamp	26112164	1
8	Volute tongue	26112163	1	24	Motor MP24AA	1521210801	1
9	Left Axile Bush	10512037	1	25	Motor Clamp	26112161	1
10	Crank	10582070	1	26	Motor FN20J-PG	150120874	1
11	Axile Bush	10542008	1	27	Electric Box Cover 1	20122103	1
12	Swing Louver1	10512156	1	28	Covering Plate2	20122075	1
13	Swing Louver2	10512155	1	29	Terminal Board	42010262	1
14	Front Case	20012123	1	30	Electric Box	20112082	1
15	Filter	1112220401	2	31	Main PCB Z5P251A	30225043	1
16	Remote Control YB1FA	30510041	1	32	Jumping Connector	4202300129	1
17	Decorate Piece	20192265 ①	1	33	Transformer 48X26G	43110233	1
		20192247 ②		34	Power Cable	400220112	1

Note:
① is part of FP-51BWA2/A-K only;
② is part of FP-51BWA5/A-K only.

Model:FP-68BA2/A-K (EM55000220); FP-85BA2/A-K (EM55000230); FP-68BA3/A-K (EM55001290); FP-85BA3/A-K (EM55001360); FP-68BA4/A-K (EM55001300); FP-85BA4/A-K (EM55001370); FP-68BA5/A-K (EM55000280); FP-85BA5/A-K (EM55000290); FP-68BB3/A-K (EM55001340); FP-85BB3/A-K (EM55001410); FP-85BA2/A-D(EM55001590) ; FP-68BA2/D-K (EM55001830) ; FP-85BA2/D-K (EM55001840); FP-68BA3/D-K (EM55002020); FP-85BA3/D-K (EM55002030); FP-68BA4/D-K (EM55002060); FP-85BA4/D-K (EM55002060); FP-68BA5/D-K (EM55002100); FP-85BA5/D-K (EM55002110) .

Exploded Views:

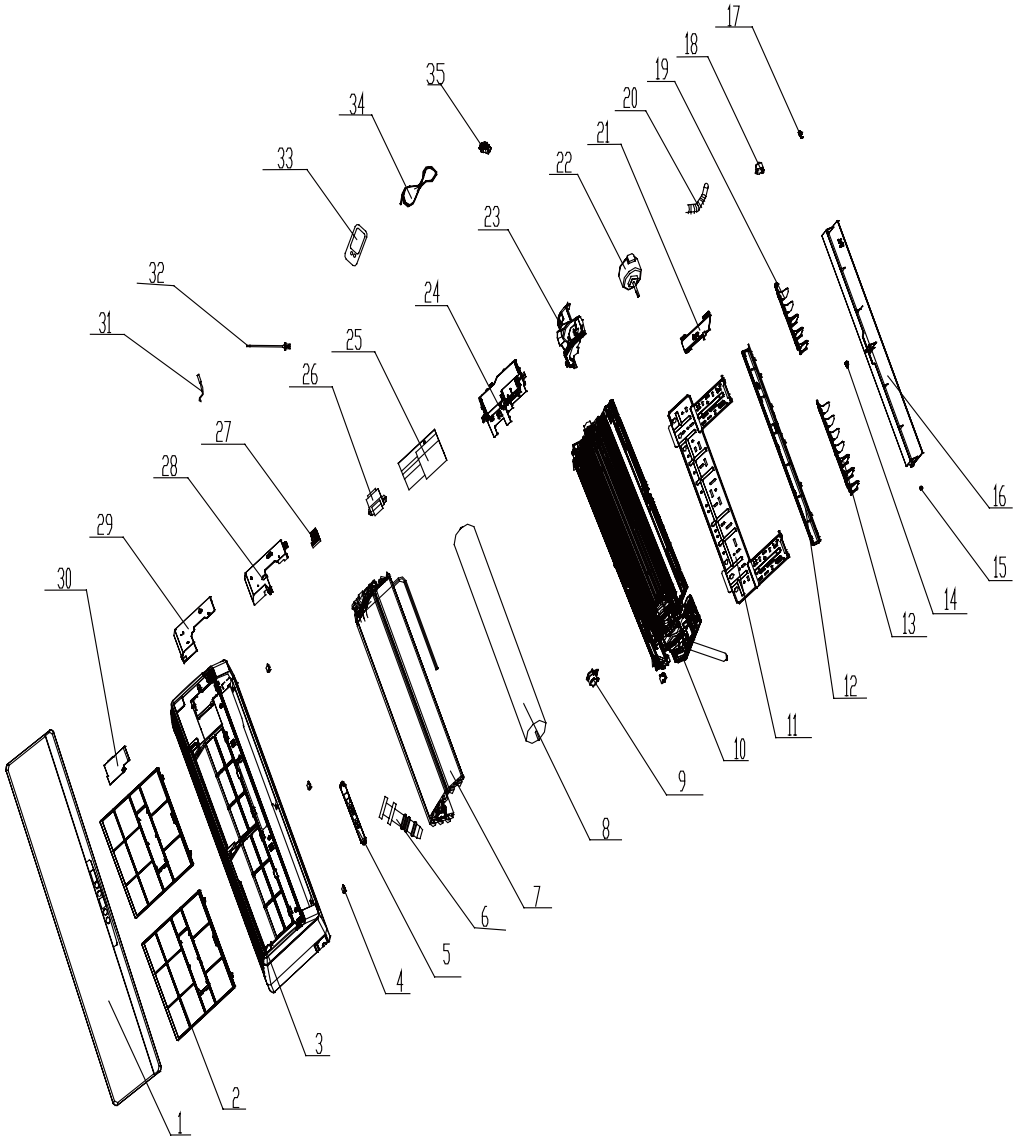

Spare parts list:
FP-68BA2/A-K (EM55000220); FP-85BA2/A-K (EM55000230); FP-68BA3/A-K (EM55001290); FP-85BA3/A-K (EM55001360); FP-68BA4/A-K (EM55001300); FP-85BA4/A-K (EM55001370); FP-68BA5/A-K (EM55000280); FP-85BA5/A-K (EM55000290); FP-68BB3/A-K (EM55001340); FP-85BB3/A-K (EM55001410); FP-85BA2/A-D(EM55001590); FP-68BA2/D-K (EM55001830); FP-85BA2/D-K (EM55001840).

No.	Name of part	Part code	Quantity	No.	Name of part	Part code	Quantity
1	Front Panel Assy	20012283 ① ② ⑨ 20012260 ③ ④ 20012280 ⑤ ⑥ 20012286 ⑦ ⑧ 20012467 ⑩ ⑪	1	19	Air Louver 2	10512117	1
2	Filter Sub-Assy	1112208901	2	20	Drainage hose	05230014	1
3	Front Case	20012250	1	21	Pipe Clamp	26112164	1
4	Screw Cover	24252016	1	22	Fan Motor	15012116 ① ② ③ ④ ⑤ ⑥ ⑦ ⑧ ⑩ ⑪ 1501211601 ⑨	1
5	Display Board	30565039 ①②⑤⑥⑨ 30565038 ③ ④ 30565038 ⑦ ⑧ 30565037 ⑩ ⑪	1	23	Motor Press Plate	26112178	1
6	Rubber Plug (Water Tray)	76712012	1	24	Electric Box	20112108	1
7	Evaporator Assy	24212100	1	25	Main Board	30225045	1
8	Cross Flow Fan	10352019	1	26	Transformer	43110237	1
9	Ring of Bearing	26152022	1	27	Terminal Board	42010268	1
10	Rear Case Assy	12312214	1	28	Electric Box Cover1	20122128	1
11	Wall Mounting Frame	01252218	1	29	Shield cover of Electric Box	01592092	1
12	Helicoid tongue	26112238	1	30	Electric Box Cover2	20112081	1
13	Air Louver 1	10512116	1	31	Tube Sensor	390000592	1
14	Axile Bush	10542008	1	32	Ambient Temperature Sensor	390000451	1
15	Left Axile Bush	10512037	1	33	Remote Controller	30510041	1
16	Guide Louver	10512115	1	34	Power Cord	400220112	1
17	crank	10582070	1	35	Jumping Connector	4202300126 ① ③ ⑤ ⑦ ⑩	1
18	Step Motor	15012086	1			4202300120 ② ④ ⑥ ⑧ ⑨ ⑪	

Note:
① is part of FP-68BA2/A-K or FP-68BA2/D-K; ② is part of FP-85BA2/A-K or FP-85BA2/D-K;
③ is part of FP-68BA3/A-K or FP-68BA3/D-K; ④ is part of FP-85BA3/A-K or FP-85BA3/D-K;
⑤ is part of FP-68BA4/A-K or FP-68BA4/D-K; ⑥ is part of FP-85BA4/A-K or FP-85BA4/D-K;
⑦ is part of FP-68BA5/A-K or FP-68BA5/D-K; ⑧ is part of FP-85BA5/A-K or FP-85BA5/D-K;
⑨ is part of FP-85BA2/A-D; ⑩ is part of FP-68BB3/A-K; ⑪ is part of FP-85BB3/A-K.

Model: FP-85BWA2/A-K (EM55000250); FP-85BWA5/A-K (EM55000310).
Exploded Views:

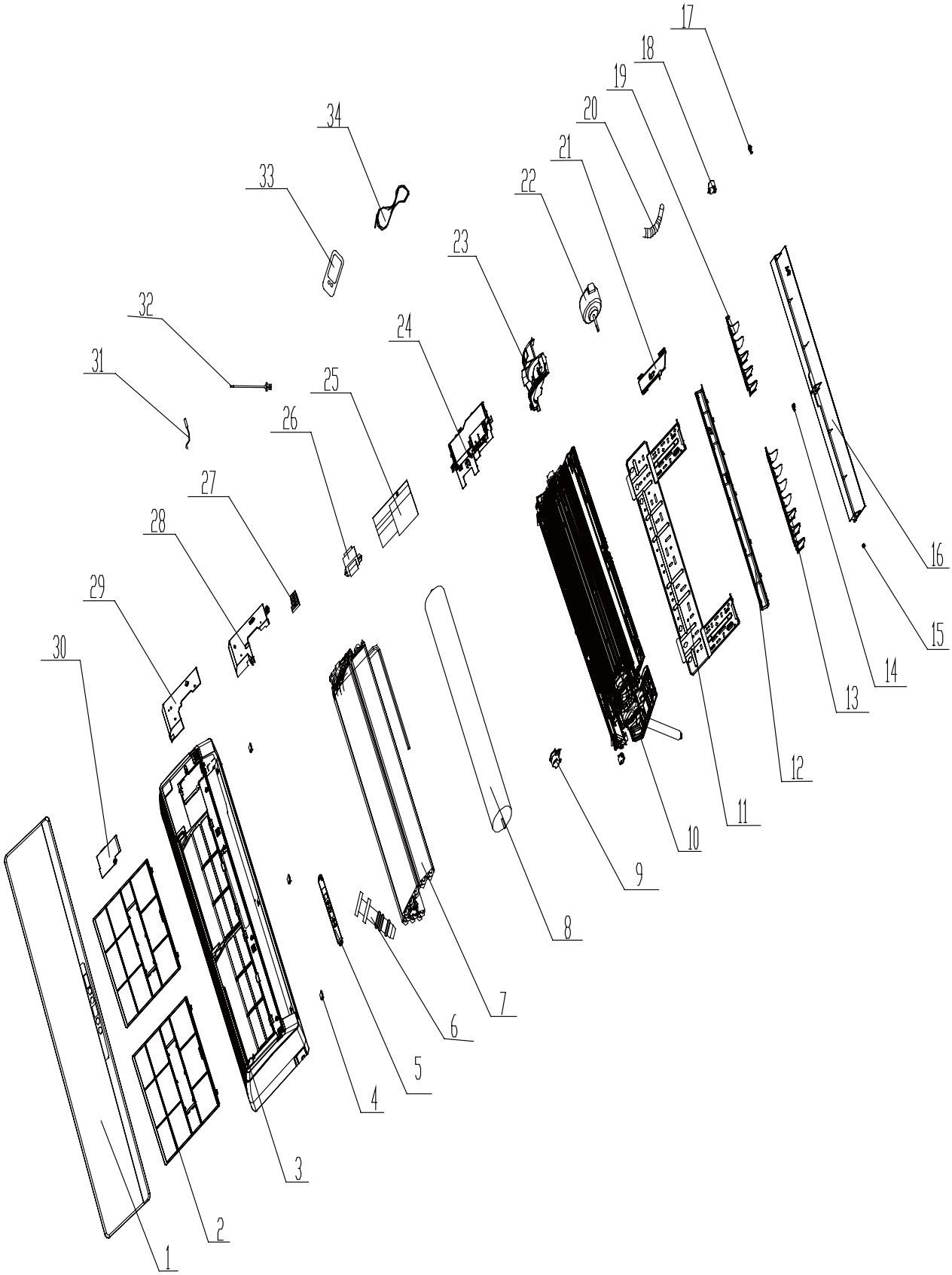

Spare parts list:
FP-85BWA2/A-K (EM55000250); FP-85BWA5/A-K (EM55000310).

No.	Name of part	Part code	Quantity	No.	Name of part	Part code	Quantity
1	Front Panel Assy	20012283 ① 20012286 ②	1	18	Stepping Motor	15012086	1
2	Filter Sub-Assy	1112208901	2	19	Air Louver 2	10512117	1
3	Front Case	20012250	1	20	Drainage hose	05230014	1
4	Screw Cover	24252016	1	21	Pipe Clamp	26112164	1
5	Display Board	30565039 ① 30565038 ②	1	22	Fan Motor	15012113 ① 15012116 ②	1
6	Rubber Plug (Water Tray)	76712012	1	23	Motor Press Plate	26112178	1
7	Evaporator Assy	24212100	1	24	Electric Box	20112108	1
8	Cross Flow Fan	10352019	1	25	Main Board	30225045	1
9	Ring of Bearing	26152022	1	26	Transformer	43110237	1
10	Rear Case Assy	12312214	1	27	Terminal Board	42010268	1
11	Wall Mounting Frame	01252218	1	28	Electric Box Cover1	20122128	1
12	Helicoid tongue	26112238	1	29	Shield cover of Electric Box	01592092	1
13	Air Louver 1	10512116	1	30	Electric Box Cover2	20112081	1
14	Axile Bush	10542008	1	31	Tube Sensor	390000592	1
15	Left Axile Bush	10512037	1	32	Ambient Temperature Sensor	390000451	1
16	Guide Louver	10512115	1	33	Remote Controller	30510041	1
17	crank	10582070	1	34	Power Cord	400220112	1

Note：
① is part of FP-85BWA2/A-K only;
② is part of FP-85BWA5/A-K only.

Model:FP-34BA2/B-D (EM55000320); FP-51BA2/B-D (EM55000330); FP-34BA3/B-D(EM55001760); FP-51BA3/B-D(EM55001800); FP-34BA5/B-D(EM55001890); FP-51BA5/B-D(EM55001900).

Exploded Views:

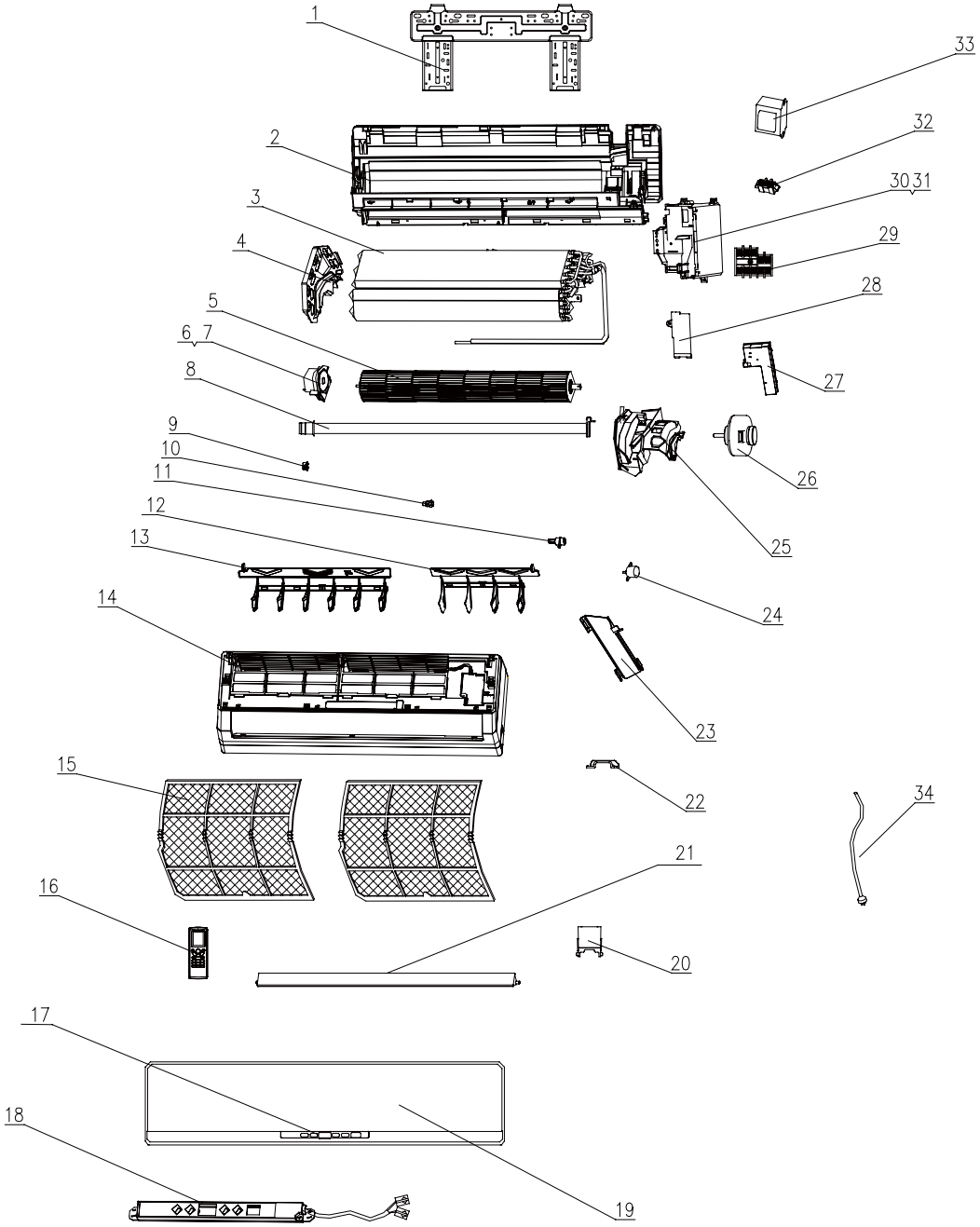

Spare parts list:

FP-34BA2/B-D (EM55000320); FP-51BA2/B-D (EM55000330); FP-34BA3/B-D(EM55001760); FP-51BA3/B-D(EM55001800); FP-34BA5/B-D(EM55001890); FP-51BA5/B-D(EM55001900).

No.	Name of part	Part code	Quantity
1	Wall-Mounting Frame	01252013 ①②③④ 01252021 ⑤⑥	1
2	Rear Case	2220245401	1
3	Sufer Cooler Assy	01126406	1
4	Evaporator Support	24212091	1
5	Cross Flow Fan	10352017	1
6	Ring of Bearing	26152022	1
7	Bearing cushion rubber base	76512203	1
8	Volute tongue	26112163	1
9	Left Axile Bush	10512037	1
10	Crank	10582070	1
11	Axile Bush	10542008 ①②③④ 10542036 ⑤⑥	1
12	Swing Louver1	10512156	1
13	Swing Louver2	10512155	1
14	Front Case	20012123	1
15	Filter	1112220401 ①②③④ 1112208503 ⑤⑥	2
16	Remote Control YBIFA(XFAN)	30510516	1
17	Decorative Board	20192265 ①②④ 22432230 ③ 20192247 ⑤⑥	1
18	Display Board	30565056 ①④ 30565007 ②③	1
19	Front Panel	20012150S ①②③④ 20012199S ⑤⑥	1
20	Screw Cover	24252016	1
21	Guide Louver	10512157	1
22	Wire Clamp	71010003	1
23	Rear Clamp	26112164	1
24	Motor MP24AA	1521212901	1
25	Motor Clamp	26112161	1
26	Motor FN20X-PG	15012089	1
27	Electric Box Cover 1	20122103	1
28	Covering Plate2	20122075	1
29	Terminal Board	42010262	1
30	Electric Box	2011208201	1
31	Main Board	30225043	1
32	Jumping Connector	4202300117 ① 4202300125 ②④ 4202300117 ③⑤⑥	1
33	Transformer 48X26G	43110233	1
34	Power Cord	4002048712	1

Note:

① only is part of FP-34BA2/B-D.
② only is part of FP-34BA3/B-D.
③ only is part of FP-51BA3/B-D.
④ only is part of FP-51BA2/B-D.
⑤ only is part of FP-34BA5/B-D
⑥ only is part of FP-51BA5/B-D

Model:FP-68BA2/B-D (EM55000340) ; FP-85BA2/B-D (EM55000350) ; FP-102BA2/B-D (EM55000360); FP-68BA3/B-D(EM55001770); FP-85BA3/B-D(EM55001780); FP-102BA3/B-D(EM55001790); FP-68BA5/B-D (EM55001910) ; FP-85BA5/B-D (EM55001920) ; FP-102BA5/B-D (EM55001930).

Exploded Views:

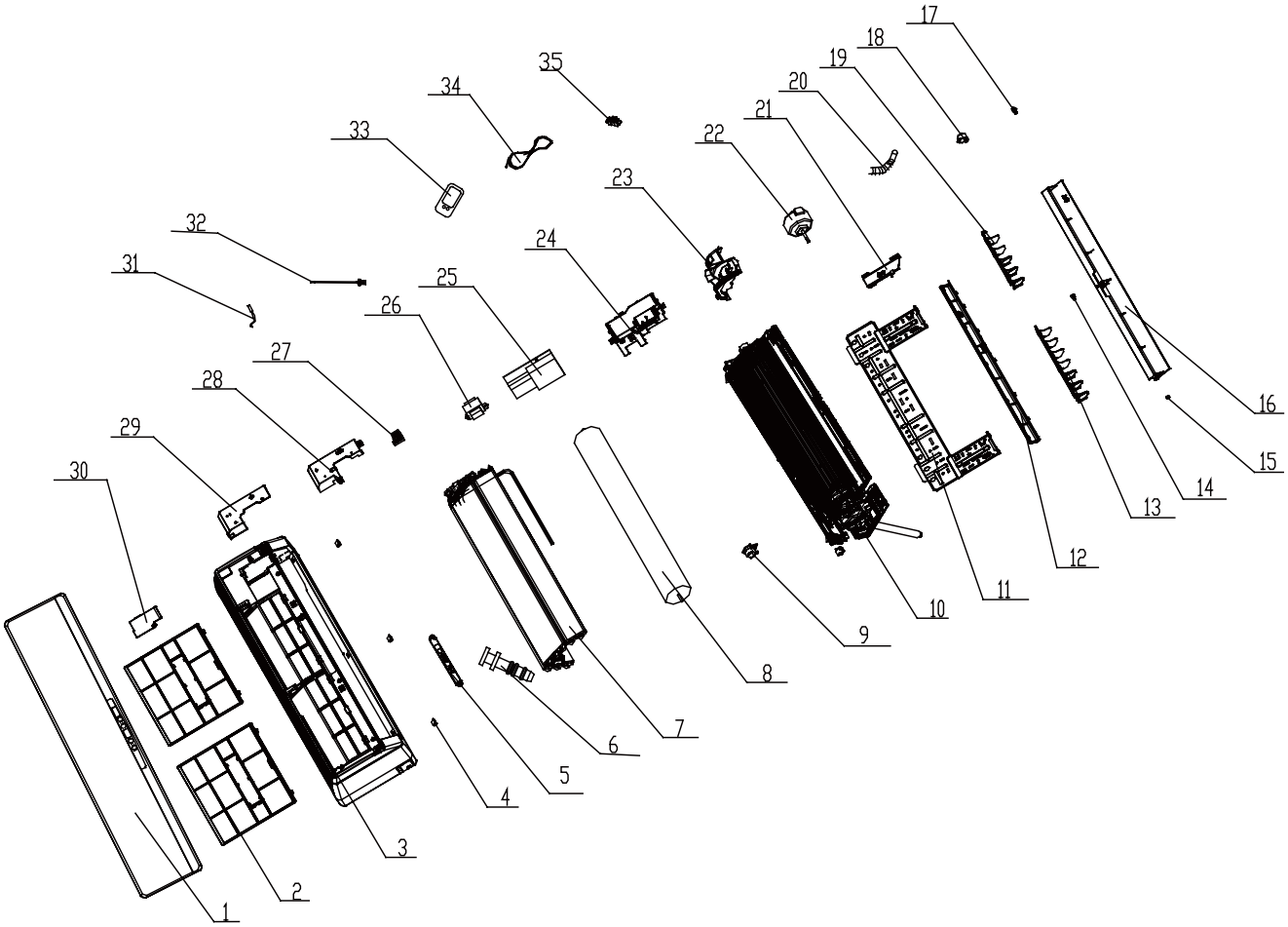

Spare parts List:

FP-68BA2/B-D (EM55000340) ; FP-85BA2/B-D (EM55000350) ; FP-102BA2/B-D (EM55000360); FP-

68BA3/B-D(EM55001770); FP-85BA3/B-D(EM55001780); FP-102BA3/B-D(EM55001790); FP-68BA5/B-D (EM55001910) ; FP-85BA5/B-D (EM55001920) ; FP-102BA5/B-D (EM55001930).

No.	Name of part	Part code	Quantity
1	Front Panel Assy	2001216801 ①②③ 20012260 ④⑤⑥ 20012286 ⑦⑧⑨	1
2	Filter Sub-Assy	1112208901	2
3	Front Case	20012261S ①②③④⑤⑥ 20012271S ⑦⑧⑨	1
4	Screw Cover	24252016	1
5	Display Board	30565039 ①②③④⑤⑥ 30565038 ⑦⑧⑨	1
6	Rubber Plug (Water Tray)	76712012	1
7	Surface Cooler Sub-Assy	01126648 ① 01126649 ② 01126405 ③ 01126649 ④⑤ 01126405 ⑥ 01156558 ⑦⑧⑨	1
8	Cross Flow Fan	10352019	1
9	Ring of Bearing	26152022	1
10	Rear Case assy	1231221408	1
11	Wall Mounting Frame	01252218	1
12	Helicoid tongue	26112238	1
13	Air Louver 1	10512116	1
14	Axile Bush	10542036	1
15	Left Axile Bush	10512037	1
16	Guide Louver	10512115	1
17	Crank	10582070	1
18	Stepping Motor	15012086	1
19	Air Louver 2	10512117	1
20	Drainage Hose	05230014	1
21	Pipe Clamp	26112164	1
22	Fan Motor FN20W-PG	1501211601	1
23	Motor Press Plate	26112494	1
24	Electric Box	20112108	1
25	Main Board	3022504501	1
26	Transformer	43110237	1
27	Terminal Board	42010268	1
28	Electric Box Cover1	20122154	1
29	Shield cover of Electric Box	01592091	1
30	Electric Box Cover2	20112081	1
31	Tube Sensor	05212423	1
32	Ambient Temperature Sensor	390000592	1
33	Remote ControlYB1FA(XFAN)	30510516	1
34	Power Cord	4002048712	1
35	Jumping Connector	4202300126 ①④⑦⑧⑨ 4202300111 ② 4202300120 ③⑥ 4202300127 ⑤	1

Notes:

① only is part of FP-68BA2/B-D.
② only is part of FP-85BA2/B-D.
③ only is part of FP-102BA2/B-D.
④ only is part of FP-68BA3/B-D
⑤ only is part of FP-85BA3/B-D
⑥ only is part of FP-102BA3/B-D
⑦ only is part of FP-68BA5/B-D
⑧ only is part of FP-85BA5/B-D
⑨ only is part of FP-102BA5/B-D

Model: FP-34BA3/B-K (EM55001720) ;FP-34BA2/B-K(EM55001710); FP-34BA5/B-K(EM55001670);FP-51BA3/B-K(EM55001730); FP-51BA2/B-K(EM55001700); FP-51BA5/B-K(EM55001660) exploded views.

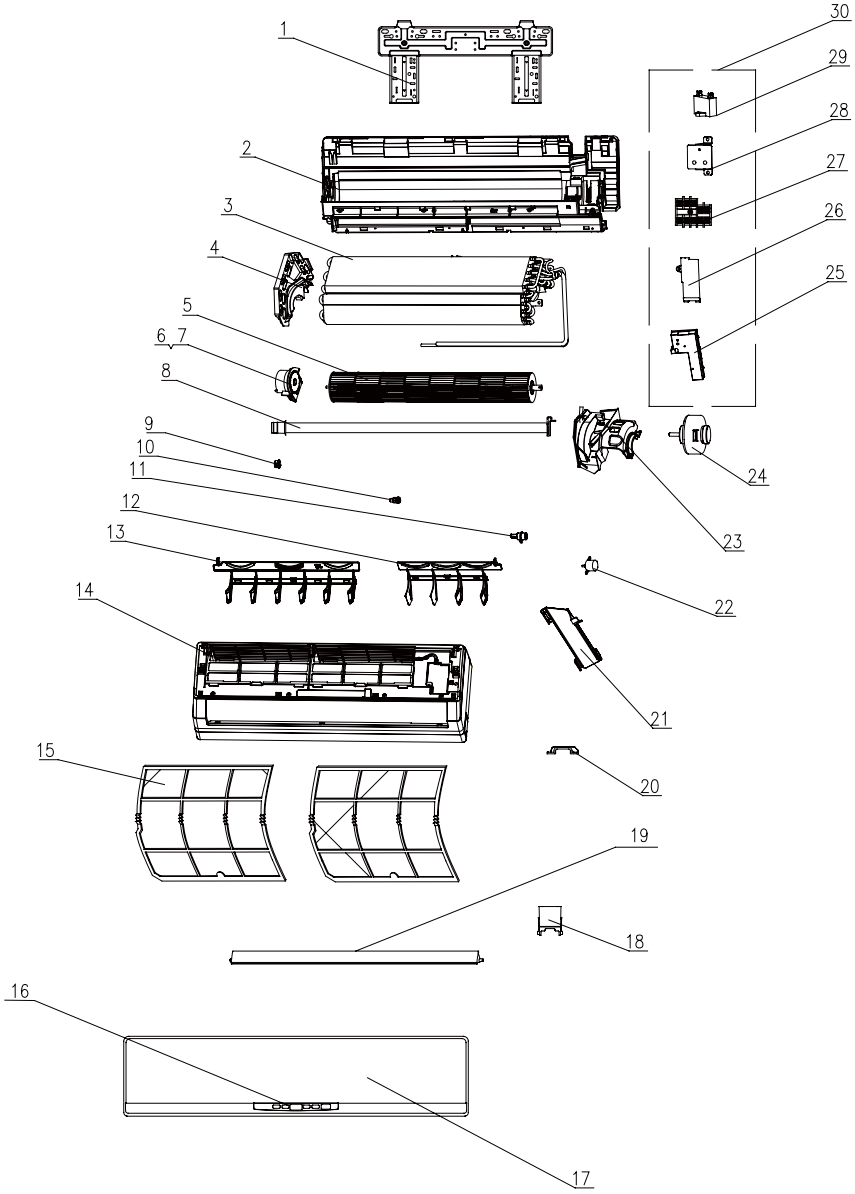

Spare parts list:
FP-34BA3/B-K (EM55001720); FP-34BA2/B-K(EM55001710); FP-34BA5/B-K(EM55001670)

No.	Name of part	Part code	Quantity
1	Wall-Mounting Frame	01252021	1
2	Rear Case	2220245401	1
3	Surface-Cooler Assy	01127669	1
4	Evaporator Support	24212091	1
5	Cross Flow Fan	10352017	1
6	Ring of Bearing	76512051	1
7	Bearing cushion rubber base	76512203	1
8	Volute Tongue	26112163	1
9	Left Axile Bush	10512037	1
10	Crank	10582070	1
11	Axile Bush	10542036	1
12	Swing Louver1	10512156	1
13	Swing Louver2	10512155	1
14	Front Case	2001212301	1
15	Filter Assy	1112220401	2
16	Decorate Piece	22432230 ① ③ 20192265 ② /	1
17	Front Panel	20012122 ① 20012150 ② 20012199 ③	1
18	Guide Louver	10512157	1
19	Screw Cover	24252016	1
20	Wire Clamp	71010003	1
21	Rear Clamp	26112164	1
22	Stepping Motor	1521212901	1
23	Motor Clamp	26112161	1
24	Motor	15706432	1
25	Electric Box Cover 1	20122103	1
26	Electric Box Cover 2	20122075	1
27	Terminal Board	42010262	1
28	Installation Supporting Frame	01806868	1
29	Capacitor	33010089	1
30	Electric Box	01396952	1

Notes:
① only is part of FP-34BA3/B-K.
② only is part of FP-34BA2/B-K.
③ only is part of FP-34BA5/B-K.

Spare parts list:
FP-51BA3/B-K(EM55001730); FP-51BA2/B-K(EM55001700); FP-51BA5/B-K(EM55001660).

No.	Name of part	Part code	Quantity
1	Wall-Mounting Frame	01252021	1
2	Rear Case	2220245401	1
3	Surface-Cooler Assy	01127669	1
4	Evaporator Support	24212091	1
5	Cross Flow Fan	10352017	1
6	Ring of Bearing	76512051	1
7	Bearing cushion rubber base	76512203	1
8	Volute Tongue	26112163	1
9	Left Axile Bush	10512037	1
10	Crank	10582070	1
11	Axile Bush	10542036	1
12	Swing Louver1	10512156	1
13	Swing Louver2	10512155	1
14	Front Case	2001212301	1
15	Filter Assy	1112220401	2
16	Decorate Piece	22432230 ①③ 20192265 ②	1
17	Front Panel	20012122 20012150 20012199	1
18	Guide Louver	10512157	1
19	Screw Cover	24252016	1
20	Wire Clamp	71010003	1
21	Rear Clamp	26112164	1
22	Stepping Motor	1521212901	1
23	Motor Clamp	26112161	1
24	Motor	15706434	1
25	Electric Box Cover 1	20122103	1
26	Electric Box Cover 2	20122075	1
27	Terminal Board	42010262	1
28	Installation Supporting Frame	01806868	1
29	Capacitor	33010089	1
30	Electric Box	01396952	1

Notes:
① only is part ofFP-51BA3/B-K.
② only is part of FP-51BA2/B-K.
③ only is part of FP-51BA5/B-K.

Model: FP-68BA3/B-K (EM55001750); FP-68BA2/B-K(EM55001690); FP-68BA5/B-K(EM55001650); FP-85BA3/B-K (EM55001750) exploded views.

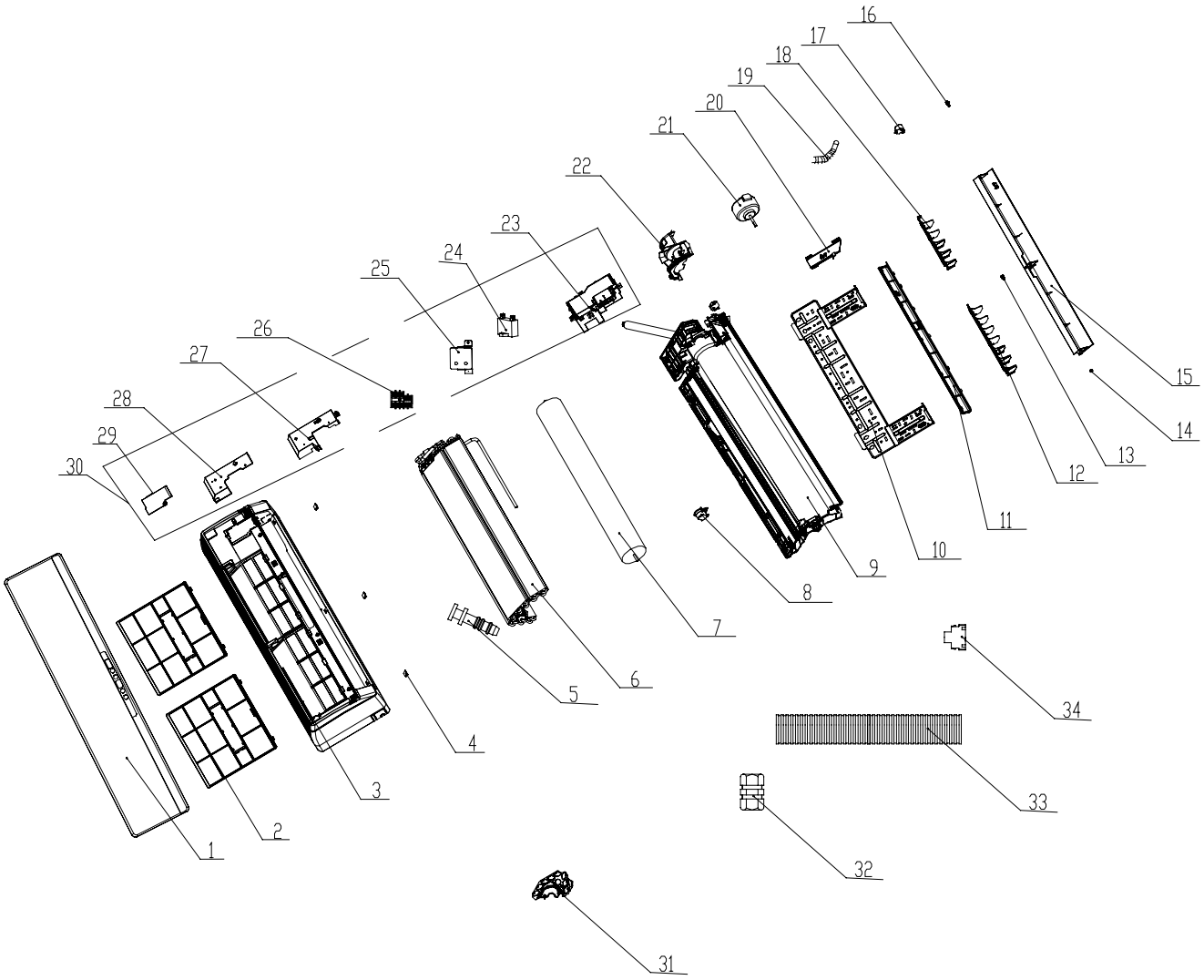

Spare parts list:
FP-68BA3/B-K (EM55001750); FP-68BA2/B-K(EM55001690); FP-68BA5/B-K(EM55001650).

No.	Name of part	Part code	Quantity
1	Front Panel Assy	20012260 ① 20012283 ② 20012286 ③	1
2	Filter Sub-Assy	1112208901	2
3	Front Case	2690603901	1
4	Screw Cover	24252016	1
5	Rubber Plug (Water Tray)	76712012	1
6	Surface Cooler Assy	01126656	1
7	Cross Flow Fan	10352019	1
8	Ring of Bearing	76512051	1
9	Rear Case assy	1231221408	1
10	Wall Mounting Frame	01252218	1
11	Volute tongue	26112238	1
12	Air Louver 1	10512116	1
13	Axile Bush	10542036	1
14	Left Axile Bush	10512037	1
15	Guide Louver	10512115	1
16	Crank	10582070	1
17	Stepping Motor	15012086	1
18	Swing Louver2	10512117	1
19	Drainage hose	05230014	1
20	Rear Clamp	26112164	1
21	Motor	1570643301	1
22	Motor Press Plate	26112494	1
23	Electric Box	20112108	1
24	Capacitor	33010020	1
25	Installation Supporting Frame	01806867	1
26	Terminal Board	42010262	1
27	Electric Box Cover 1	20122154	1
28	Shield cover of Electric Box	01592092	1
29	Electric Box Cover 2	20112081	1
30	Electric Box Assy	01397320	1
31	Evaporator Angular	24212100	1
32	Pipe Connection Assembly	06649591	2
33	Blow Molding Drainage Pipe	05230022	1

Notes:
① only is part of FP-68BA3/B-K.
② only is part of FP-68BA2/B-K.
③ only is part of FP-68BA5/B-K.

Spare parts list:
FP-85BA3/B-K (EM55001750); FP-85BA2/B-K(EM55001680); FP-85BA5/B-K(EM55001640)

No.	Name of part	Part code	Quantity
1	Front Panel Assy	20012260 ① 20012283 ② 20012286 ③	1
2	Filter Sub-Assy	1112208901	2
3	Front Case	2690603901	1
4	Screw Cover	24252016	1
5	Rubber Plug (Water Tray)	76712012	1
6	Surface Cooler Assy	01127666	1
7	Cross Flow Fan	10352019	1
8	Ring of Bearing	76512051	1
9	Rear Case assy	1231221408	1
10	Wall Mounting Frame	01252218	1
11	Volute tongue	26112238	1
12	Air Louver 1	10512116	1
13	Axile Bush	10542036	1
14	Left Axile Bush	10512037	1
15	Guide Louver	10512115	1
16	Crank	10582070	1
17	Stepping Motor	15012086	1
18	Swing Louver2	10512117	1
19	Drainage hose	05230014	1
20	Rear Clamp	26112164	1
21	Motor	15706433	1
22	Motor Press Plate	26112494	1
23	Electric Box	20112108	1
24	Capacitor	33010020	1
25	Installation Supporting Frame	01806867	1
26	Terminal Board	42010262	1
27	Electric Box Cover 1	20122154	1
28	Shield cover of Electric Box	01592092	1
29	Electric Box Cover 2	20112081	1
30	Electric Box Assy	01397320	1
31	Evaporator Angular	24212100	1
32	Pipe Connection Assembly	06649591	2
33	Blow Molding Drainage Pipe	05230022	1

Notes:
① only is part of FP-85BA3/B-K.
② only is part of FP-85BA2/B-K.
③ only is part of FP-85BA5/B-K.

Model: FP-51BWA3/A-K(EM55001430) exploded views.

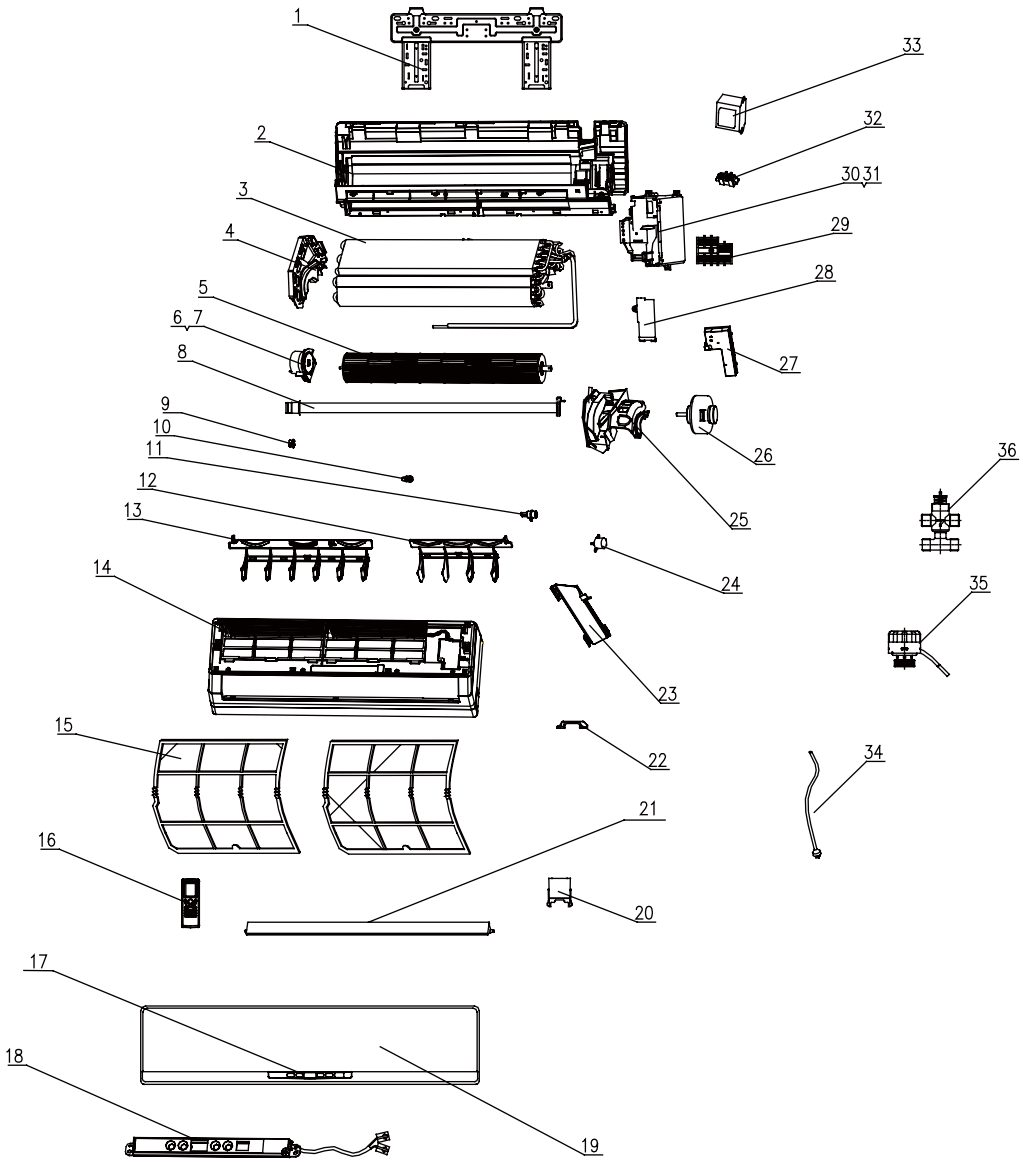

Spare parts List:
FP-51BWA3/A-K(EM55001430)

No.	Name of part	Part code	Quantity
1	Wall-Mounting Frame	01252021	1
2	Rear Case	2220245401	1
3	Sufer Cooler Assy	01126407	1
4	Evaporator Support	24212091	1
5	Cross Flow Fan	10454101	1
6	Ring of Bearing	26152022	1
7	Bearing cushion rubber base	76512203	1
8	Volute tongue	26112163	1
9	Left Axile Bush	10512037	1
10	Crank	10582070	1
11	Axile Bush	10542036	1
12	Swing Louver1	10512156	1
13	Swing Louver2	10512155	1
14	Front Case	26906038	1
15	Filter	1112220401	2
16	Remote Control YB1FA	30510516	1
17	Decorate Piece	22432230	1
18	Display Board D5183Z	30565007	1
19	Front Panel	20012123	1
20	Screw Cover	24252016	1
21	Guide Louver	10512157	1
22	Wire Clamp	22432230	1
23	Rear Clamp	26112164	1
24	Motor MP24AA	1521212901	1
25	Motor Clamp	26112161	1
26	Motor FN20J-PG	150120874	1
27	Electric Box Cover 1	20122103	1
28	Covering Plate2	20122075	1
29	Terminal Board	42010262	1
30	Electric Box	2011208201	1
31	Main PCB Z5P251A	30225043	1
32	Jumping Connector	4202300127	1
33	Transformer 48X26G	43110233	1
34	Power Cable	400220112	1
35	Loop of electromagnetic valve	43007002	1
36	Electromagnetic valve	43007001	1

Model: FP-85BWA3/A-K(EM55001510) exploded views.

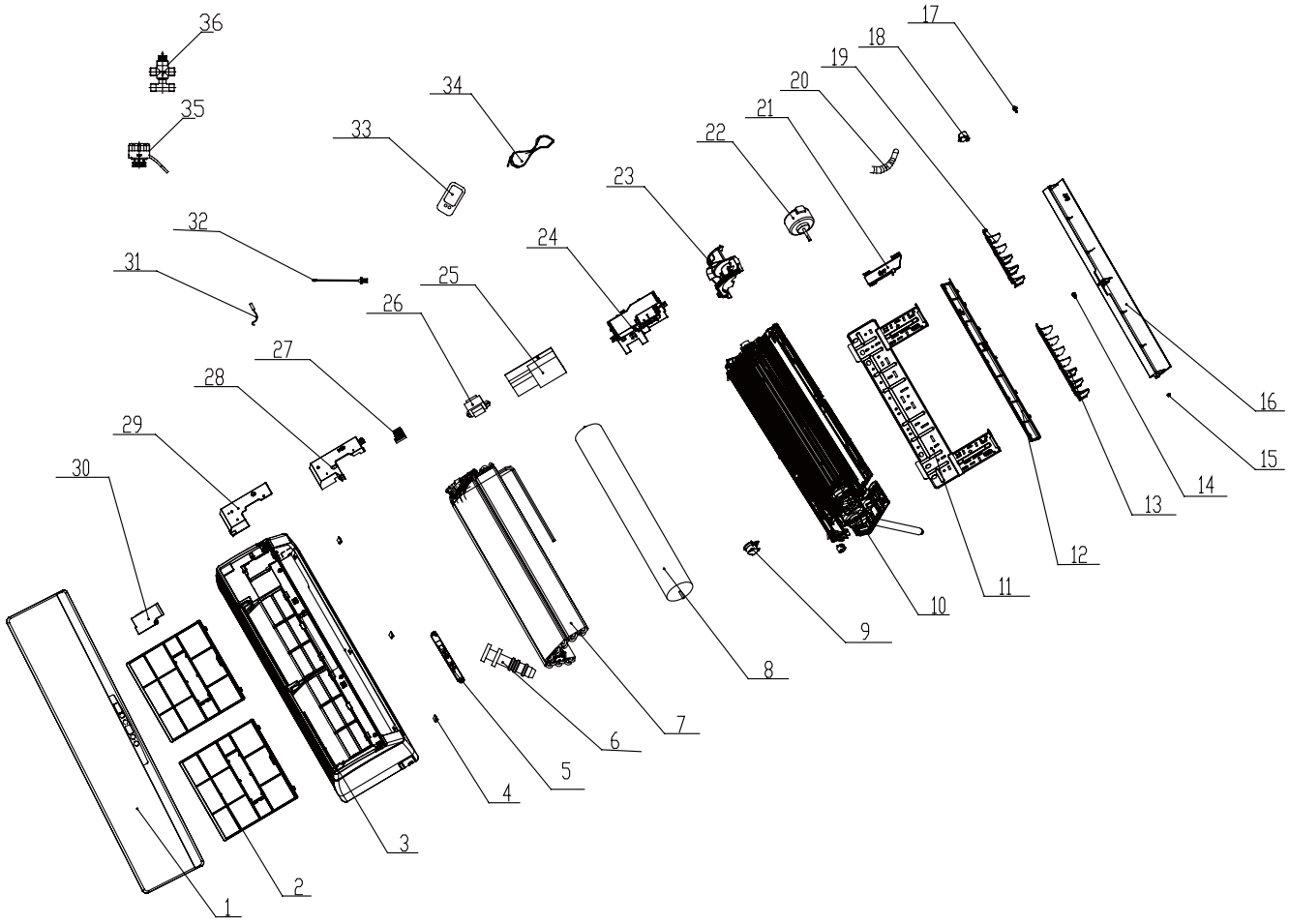

Spare parts List:
FP-85BWA3/A-K(EM55001510)

No.	Name of part	Part code	Quantity
1	Front Panel Assy	20012260	1
2	Filter Sub-Assy	1112208901	2
3	Front Case	26906039	1
4	Screw Cover	24252016	3
5	Display Board	30565038	1
6	Rubber Plug (Water Tray)	76712012	1
7	Surface-Cooler Assy	01126404	1
8	Cross Flow Fan	10454102	1
9	Ring of Bearing	26152022	1
10	Rear Case assy	01516005	1
11	Wall Mounting Frame	01252218	1
12	Helicoid Tongue	26112238	1
13	Air Louver 1	10512116	1
14	Axile Bush	10542036	1
15	Left Axile Bush	10512037	1
16	Guide Louver	10512115	1
17	Crank	10582070	
18	Motor	15012086	1
19	Air Louver 2	10512117	1
20	Drainage Hose	05230014	1
21	Pipe Clamp	26112164	1
22	Fan Motor	15012116	1
23	Motor Clamp	26112494	1
24	Electric Box	20112108	1
25	Main Board	3022504501	1
26	Transformer	43110237	1
27	Terminal Board	42010268	1
28	Electric Box Cover1	20122154	1
29	Shield Cover of Electric Box	01592092	1
30	Electric Box Cover2	20112081	1
31	Tube Sensor	390000592G	1
32	Temperature Sensor	390000451	1
33	Remote Controller	30510516	1
34	Power Cord	400220112	1
35	Loop of electromagnetic Valve	43007002	1
36	Electromagnetic Valve	43007001	1

JF00300236

GREE ELECTRIC APPLIANCES, INC. OF ZHUHAI

Add: West Jinji Rd, Qianshan, Zhuhai, Guangdong, China, 519070
Tel: (+86-756) 8522218 Fax: (+86-756) 8669426
E-mail: gree@gree.com.cn www.gree.com

For continuous improvement in the products, Gree reserves the right to modidy the product specification and appearance in this manual without notice and without incurring any obligations.