Service Manual

Multi Variable Air Conditioners Indoor Units

(GC202209-XXI)
Capacity: 1500W~56000W
Rated Frequency: 50/60Hz

GREE ELECTRIC APPLIANCES, INC. OF ZHUHAI

CONTENTS

PRODUCT **1**

1 Product List **2**

1.1 Floor Standing Type 2

1.2 High Static Pressure Duct Type 2

1.3 Low Static Pressure Duct Type 2

1.4 4-way Cassette 3

1.5 Compact 4-way Cassette 4

1.6 360°Air Discharge Compact Cassette 4

1.7 2-way Cassette 4

1.8 1-way Cassette 5

1.9 Floor Ceiling 5

1.10 Fresh Air Processing 5

1.11 Slim Duct Type 6

1.12 Air Handler Type Indoor Unit 7

1.13 Console Type Indoor Unit 7

1.14 Wall Mounted Type Indoor Unit 7

1.15 Super High Static Pressure Duct Type Indoor Unit 11

1.16 AHU-KIT Type 12

1.17 Concealed Floor Standing Type 13

1.18 360°Air Discharge Cassette 14

1.19 Heat Storage Module 15

1.20 High Static Pressure Duct Type Indoor Unit 15

2 Nomenclature **16**

2.1 Nomenclature of Indoor Units 16

3 Specifications **17**

3.1 Floor Standing Type 17

3.2 High Static Pressure Duct Type 18

3.3 Low Static Pressure Duct Type 19

3.4 4-way Cassette Type 22

3.5 Compact 4-way Cassette Type 24

3.6 360°Air Discharge Compact Cassette 25

3.7 2-way Cassette Type 25

3.8 1-way Cassette Type 27

3.9 Floor Ceiling Type 28

3.10 Fresh air Processing Unit 30

3.11 Slim Duct Type 33

3.12 Air Handler Type Indoor Unit 35

3.13 Console Type Indoor Unit 36
3.14 Wall Mounted Type Indoor Unit 37
3.15 Super High Static Pressure Duct Type Indoor Unit 58
3.16 AHU-KIT Type 61
3.17 Concealed Floor Standing Type 64
3.18 360°Air Discharge Cassette 65
3.19 Heat Storage Module 71
3.20 High Static Pressure Duct Type Indoor Unit 71
CONTROL 73
1 Operation Flowchart 74
2 Wired Controller 75
2.1 Control Panel 75
2.2 Installation and Removal 78
3 Remote Controller 81
3.1 Remote Controller YAP1F 81
4 Panel Display 82
4.1 Control Panel 82
4.2 Operational Instruction 82
5 Introduction to Unit Functions 86
5.1 Engineering Application Functions Operated through the XK46 Wired Controller 87
5.2 Engineering Application Functions Operated through the XK79 Wired Controller 101
5.3 Engineering Application Functions Operated through the YAP1F Remote Controller 105
INSTALLATION 107
1 Engineering Installation Preparation and Notice 108
1.1 Installation Notice 108
1.2 Installation Key Points and Importance 108
2 Installation Materials Selection 109
2.1 Refrigerant Piping 109
2.2 Condensate Water Pipe 110
2.3 Insulation Material 110
2.4 Communication Cable and Control Cable 110
2.5 Power Cable 111
2.6 Hanger Rod and Support 111
3 Installation of Indoor Unit 111
3.1 Installation of Floor Standing Indoor Unit 111
3.2 Installation of High Static Pressure Duct Type Unit 113
3.3 Installation of Low Static Pressure Duct Type Unit 117
3.4 Installation of 4-way Cassette Type Unit 123

3.5 Installation of Compact 4-way Cassette Type Unit 125
3.6 Installation of 360°Air Discharge Compact Cassette Type Unit 127
3.7 Installation of Compact 2-way Cassette Type Unit 129
3.8 Installation of Compact 1-way Cassette Type Unit 132
3.9 Installation of Floor Ceiling Type Unit 134
3.10 Installation of Fresh air Processing Unit 139
3.11 Installation of Slim Duct Type Unit 142
3.12 Installation of Air Handler type Indoor Unit 144
3.13 Installation of Wall-Mounted Unit 145
3.14 Console Type Indoor Unit 151
3.15 Installation of Super High Static Pressure Duct Type Indoor Unit 152
3.16 Installation of AHU-KIT Type 157
3.17 Installation of Concealed Floor Standing Type 171
3.18 Installation of 360°Air Discharge Cassette Type Unit 173
3.19 Installation of Heat Storage Module 176
3.20 Installation of High Static Pressure Duct Type Indoor Unit 177
4 Installation of Drain Pipe 179
4.1 Precautions When Doing the Piping Work 179
4.2 Installing the Drain Pipes 180
4.3 Precautions When Doing Riser Piping Work 182
4.4 Testing of Drain Piping 183
5 Electrical Installation 183
MAINTENANCE 184
1 Troubleshooting 185
1.1 Malfunction List for the Wired Controller 185
1.2 Exception Analyzing and Troubleshooting 185
2 After-sales Emergency Measures 197
3 Wiring Diagram 197
3.1 Floor Standing Type 198
3.2 High Static Pressure Duct Type 198
3.3 Low Static Pressure Duct Type 200
3.4 4-way Cassette Type 204
3.5 Compact 4-way Cassette Type 205
3.6 360°Air Discharge Compact Cassette Type 206
3.7 2-way Cassette Type 207
3.8 1-way Cassette Type 208
3.9 Floor Ceiling Type 209
3.10 Fresh air Processing Unit 211
3.11 Slim Duct Type 214

3.12 Air Handler Type Indoor Unit 215
3.13 Console Type Indoor Unit 216
3.14 Wall Mounted type Indoor Unit 216
3.15 Super High Static Pressure Duct Type Indoor Unit 221
3.16 AHU-KIT Type 224
3.17 Concealed Floor Standing Type 226
3.18 360°Air Discharge Cassette Type 227
3.19 Heat Storage Module 230
3.20 High Static Pressure Duct Type Indoor Unit 230
4 Disassembly and Assembly Procedure Of Main Parts 232
4.1 Floor Standing Type 232
4.2 High Static Pressure Duct Type 233
4.3 Low Static Pressure Duct Type 234
4.4 4-way Cassette Type 237
4.5 Compact 4-way Cassette Type 240
4.6 360°Air Discharge Compact Cassette Type 243
4.7 2-way Cassette Type 245
4.8 1-way Cassette Type 247
4.9 Floor Ceiling Type 251
4.10 Fresh air Processing Unit 255
4.11 Slim Duct Type 259
4.12 Console Type Indoor Unit 261
4.13 Wall Mounted type Indoor Unit 262
4.14 Super High Static Pressure Duct Type Indoor Unit 264
4.15 Concealed Floor Standing Type 266
4.16 360°Air Discharge Cassette Type 268
4.17 High Static Pressure Duct Type Indoor Unit 271
5 Exploded Views and Part List 272
5.1 Floor Standing Type 272
5.2 High Static Pressure Duct Type 274
5.3 Low Static Pressure Duct Type 282
5.4 4-way Cassette Type 312
5.5 Compact 4-way Cassette Type 318
5.6 360°Air Discharge Compact Cassette Type 322
5.7 2-way Cassette Type 325
5.8 1-way Cassette Type 331
5.9 Floor Ceiling Type 339
5.10 Fresh air Processing Unit 353
5.11 Slim Duct Type 363

5.12 Console Type Indoor Unit 372
5.13 Wall Mounted type Indoor Unit 374
5.14 Super High Static Pressure Duct Type Indoor Unit 418
5.15 AHU-KIT Type 434
5.16 Concealed Floor Standing Type 443
5.17 360°Air Discharge Cassette Type 448
5.18 Heat Storage Module 465
5.19 High Static Pressure Duct Type Indoor Unit 467

PRODUCT

1 Product List

1.1 Floor Standing Type

Model	Product Code	Cooling Capacity	Heating Capacity	Power Supply	Refrigerant	Appearance
		kW	kW			
GMV-ND100L/A-T	CM300N0060	10.0	11.0	220-240V ~50Hz 208-230V ~60Hz	R410A	
GMV-ND140L/A-T	CM300N0070	14.0	15.0			

1.2 High Static Pressure Duct Type

Model	Product Code	Cooling Capacity	Heating Capacity	Power Supply	Refrigerant	Appearance
		kW	kW			
GMV-ND56PHS/A-T	CM800N3690	5.6	6.3	220-240V ~50Hz 208-230V ~60Hz	R410A	
GMV-ND63PHS/A-T	CM800N3700	6.3	7.1			
GMV-ND71PHS/A-T	CM800N3540	7.1	8.0			
GMV-ND80PHS/A-T	CM800N3710	8.0	9.0			
GMV-ND90PHS/A-T	CM800N3550	9.0	10.0			
GMV-ND100PHS/A-T	CM800N3650	10.0	11.2			
GMV-ND112PHS/A-T	CM800N3660	11.2	12.5			
GMV-ND125PHS/A-T	CM800N3670	12.5	14.0			
GMV-ND140PHS/A-T	CM800N3680	14.0	16.0			
GMV-ND160PHS/A-T	CM810N0250	16.0	18.0			
GMV-ND224PH/A-T	CM800N3721	22.4	25.0			
GMV-ND280PH/A-T	CM800N3731	28.0	31.0			

1.3 Low Static Pressure Duct Type

Model	Product Code	Cooling Capacity	Heating Capacity	Power Supply	Refrigerant	Appearance
		kW	kW			
GMV-ND22PLS/A-T	CM800N3370	2.2	2.5	220-240V ~50Hz 208-230V ~60Hz	R410A	
GMV-ND25PLS/A-T	CM800N3380	2.5	2.8			
GMV-ND28PLS/A-T	CM800N3490	2.8	3.2			
GMV-ND32PLS/A-T	CM800N3390	3.2	3.6			
GMV-ND36PLS/A-T	CM800N3500	3.6	4.0			
GMV-ND40PLS/A-T	CM800N3400	4.0	4.5			
GMV-ND45PLS/A-T	CM800N3410	4.5	5.0			
GMV-ND50PLS/A-T	CM800N3420	5.0	5.6			
GMV-ND56PLS/A-T	CM800N3510	5.6	6.3			
GMV-ND63PLS/A-T	CM800N3430	6.3	7.1			
GMV-ND71PLS/A-T	CM800N3520	7.1	8.0			
GMV-ND80PLS/A-T	CM800N3440	8.0	9.0			
GMV-ND90PLS/A-T	CM800N3450	9.0	10.0			
GMV-ND100PLS/A-T	CM800N3460	10.0	11.2			
GMV-ND112PLS/A-T	CM800N3530	11.2	12.5			
GMV-ND125PLS/A-T	CM800N3480	12.5	14.0			
GMV-ND140PLS/A-T	CM800N3470	14.0	16.0			

Model	Product Code	Cooling Capacity	Heating Capacity	Power Supply	Refrigerant	Appearance
		kW	kW			
GMV-ND18PLS/C-T	CM810N2030	1.8	2.2	220-240 V~50Hz 208-230 V~60Hz	R410A	
GMV-ND22PLS/C-T	CM810N1800	2.2	2.5			
GMV-ND25PLS/C-T	CM810N1810	2.5	2.8			
GMV-ND28PLS/C-T	CM810N1770	2.8	3.2			
GMV-ND32PLS/C-T	CM810N1820	3.2	3.6			
GMV-ND36PLS/C-T	CM810N1760	3.6	4.0			
GMV-ND40PLS/C-T	CM810N1830	4.0	4.5			
GMV-ND45PLS/C-T	CM810N1740	4.5	5.0			
GMV-ND50PLS/C-T	CM810N1840	5.0	5.6			
GMV-ND56PLS/C-T	CM810N1850	5.6	6.3			
GMV-ND63PLS/C-T	CM810N1730	6.3	7.1			
GMV-ND71PLS/C-T	CM810N1750	7.1	8.0			
GMV-ND80PLS/C-T	CM810N1920	8.0	9.0			
GMV-ND90PLS/C-T	CM810N1960	9.0	10.0			
GMV-ND100PLS/C-T	CM810N1970	10.0	11.2			
GMV-ND112PLS/C-T	CM810N1950	11.2	12.5			
GMV-ND125PLS/C-T	CM810N1940	12.5	14.0			
GMV-ND140PLS/C-T	CM810N1930	14.0	16.0			
GMV-ND18PLS/C1-T	CM810N2610	1.8	2.2			
GMV-ND22PLS/C1-T	CM810N2620	2.2	2.5			
GMV-ND25PLS/C1-T	CM810N2630	2.5	2.8			
GMV-ND28PLS/C1-T	CM810N2580	2.8	3.2			
GMV-ND32PLS/C1-T	CM810N2640	3.2	3.6			
GMV-ND36PLS/C1-T	CM810N2570	3.6	4.0			
GMV-ND40PLS/C1-T	CM810N2650	4.0	4.5			
GMV-ND45PLS/C1-T	CM810N2660	4.5	5.0			
GMV-ND50PLS/C1-T	CM810N2560	5.0	5.6			
GMV-ND56PLS/C1-T	CM810N2600	5.6	6.3			
GMV-ND63PLS/C1-T	CM810N2550	6.3	7.1			
GMV-ND71PLS/C1-T	CM810N2590	7.1	8.0			
GMV-ND80PLS/C1-T	CM810N2540	8.0	9.0			

1.4 4-way Cassette

Model	Product Code	Cooling Capacity	Heating Capacity	Power Supply	Refrigerant	Appearance
		kW	kW			
GMV-ND28T/A-T	CM500N0380	2.8	3.2	220-240 V~50Hz 208-230 V~60Hz	R410A	
GMV-ND36T/A-T	CM500N0390	3.6	4.0			
GMV-ND45T/A-T	CM500N0400	4.5	5.0			
GMV-ND50T/A-T	CM500N0410	5.0	5.6			
GMV-ND56T/A-T	CM500N0420	5.6	6.3			
GMV-ND63T/A-T	CM500N0430	6.3	7.1			
GMV-ND71T/A-T	CM500N0440	7.1	8.0			
GMV-ND80T/A-T	CM500N0450	8.0	9.0			
GMV-ND90T/A-T	CM500N0460	9.0	10.0			
GMV-ND100T/A-T	CM500N0470	10.0	11.2			
GMV-ND112T/A-T	CM500N0480	11.2	12.5			
GMV-ND125T/A-T	CM500N0490	12.5	14.0			
GMV-ND140T/A-T	CM500N0500	14.0	16.0			
GMV-ND160T/A-T	CM500N0660	16.0	17.5			

1.5 Compact 4-way Cassette

Model	Product Code	Cooling Capacity	Heating Capacity	Power Supply	Refrigerant	Appearance
		kW	kW			
GMV-ND22T/B-T	CM500N0610	2.2	2.5	220-240 V~50Hz 208-230 V~60Hz	R410A	
GMV-ND28T/B-T	CM500N0620	2.8	3.2			
GMV-ND36T/B-T	CM500N0630	3.6	4.0			
GMV-ND45T/B-T	CM500N0640	4.5	5.0			
GMV-ND50T/B-T	CM500N0600	5.0	5.6			
GMV-ND56T/B-T	CM500N0650	5.6	6.3			

1.6 360°Air Discharge Compact Cassette

Model	Product Code	Cooling Capacity	Heating Capacity	Power Supply	Refrigerant	Appearance
		kW	kW			
GMV-ND15T/E-T	CM500N1690	1.5	1.8	220-240V ~50Hz 208-230V ~60Hz	R410A	
GMV-ND18T/E-T	CM500N1700	1.8	2.2			
GMV-ND22T/E-T	CM500N1350	2.2	2.5			
GMV-ND28T/E-T	CM500N1340	2.8	3.2			
GMV-ND36T/E-T	CM500N1330	3.6	4.0			
GMV-ND45T/E-T	CM500N1310	4.5	5.0			
GMV-ND50T/E-T	CM500N1320	5.0	5.6			
GMV-ND56T/E-T	CM500N1300	5.6	6.3			

1.7 2-way Cassette

Model	Product Code	Cooling Capacity	Heating Capacity	Power Supply	Refrigerant	Appearance
		kW	kW			
GMV-ND28TS/A-T	CM500N0680	2.8	3.2	220-240V ~50Hz 208-230V ~60Hz	R410A	
GMV-ND36TS/A-T	CM500N0690	3.6	4.0			
GMV-ND45TS/A-T	CM500N0700	4.5	5.0			
GMV-ND50TS/A-T	CM500N0710	5.0	5.6			
GMV-ND56TS/A-T	CM500N0720	5.6	6.3			
GMV-ND63TS/A-T	CM500N0730	6.3	7.1			
GMV-ND71TS/A-T	CM500N0740	7.1	8.0			
GMV-ND28TS/B-T	CM500N1770	2.8	3.2	220-240V ~50Hz 208-230V ~60Hz	R410A	
GMV-ND36TS/B-T	CM500N1760	3.6	4.0			
GMV-ND45TS/B-T	CM500N1780	4.5	5.0			
GMV-ND50TS/B-T	CM500N1750	5.0	5.6			
GMV-ND56TS/B-T	CM500N1790	5.6	6.3			
GMV-ND63TS/B-T	CM500N1800	6.3	7.1			
GMV-ND71TS/B-T	CM500N1810	7.1	8.0			
GMV-ND80TS/B-T	CM500N1740	8.0	9.0			

1.8 1-way Cassette

Model	Product Code	Cooling Capacity	Heating Capacity	Power Supply	Refrigerant	Appearance
		kW	kW			
GMV-ND22TD/A-T	CM502N0140	2.2	2.5	220-240V ~50Hz 208-230V ~60Hz	R410A	
GMV-ND28TD/A-T	CM502N0100	2.8	3.2			
GMV-ND36TD/A-T	CM502N0110	3.6	4.0			
GMV-ND45TD/A-T	CM502N0120	4.5	5.0			
GMV-ND50TD/A-T	CM502N0130	5.0	5.6			
GMV-ND56TD/A-T	CM502N0171	5.6	6.3			
GMV-ND63TD/B-T	CM503N1060	6.3	7.1			
GMV-ND71TD/B-T	CM502N0190	7.1	8.0			
GMV-ND80TD/B-T	CM502N0200	8.0	9.0			

1.9 Floor Ceiling

Model	Product Code	Cooling Capacity	Heating Capacity	Power Supply	Refrigerant	Appearance
		kW	kW			
GMV-ND28ZD/A-T	CM600N0350	2.8	3.2	220-240V ~50Hz 208-230V ~60Hz	R410A	
GMV-ND36ZD/A-T	CM600N0360	3.6	4.0			
GMV-ND50ZD/A-T	CM600N0320	5.0	5.6			
GMV-ND56ZD/A-T	CM600N0400	5.6	6.3			
GMV-ND63ZD/A-T	CM600N0410	6.3	7.1			
GMV-ND71ZD/A-T	CM600N0370	7.1	8.0			
GMV-ND90ZD/A-T	CM600N0330	9.0	10.0			
GMV-ND112ZD/A-T	CM600N0380	11.2	12.5			
GMV-ND125ZD/A-T	CM600N0390	12.5	14.0			
GMV-ND140ZD/A-T	CM600N0340	14.0	16.0			
GMV-ND160ZD/A-T	CM600N0500	16.0	18.0			
GMV-ND28ZD/B-T	CM600N0570	2.8	3.2	220-240V ~50Hz 208-230V ~60Hz	R410A	
GMV-ND36ZD/B-T	CM600N0540	3.6	4.0			
GMV-ND50ZD/B-T	CM600N0510	5.0	5.6			
GMV-ND56ZD/B-T	CM600N0580	5.6	6.3			
GMV-ND63ZD/B-T	CM600N0590	6.3	7.1			
GMV-ND71ZD/B-T	CM600N0550	7.1	8.0			
GMV-ND90ZD/B-T	CM600N0520	9.0	10.0			
GMV-ND112ZD/B-T	CM600N0610	11.2	12.5			
GMV-ND125ZD/B-T	CM600N0530	12.5	14.0			
GMV-ND140ZD/B-T	CM600N0600	14.0	16.0			
GMV-ND160ZD/B-T	CM600N0560	16.0	18.0			

1.10 Fresh Air Processing

Model	Product Code	Cooling Capacity	Heating Capacity	Power Supply	Refrigerant	Appearance
		kW	kW			
GMV-NX140P/A(X1.2)-K	CM800N3610	14.0	10.0	220-240V ~50Hz	R410A	

Model	Product Code	Cooling Capacity	Heating Capacity	Power Supply	Refrigerant	Appearance
		kW	kW			
GMV-NX224P/A (X2.0) -M	CM800N3620	22.4	16.0	380-415V ~50Hz	R410A	
GMV-NX280P/A (X2.5) -M	CM800N3630	28.0	20.0			
GMV-NX280P/A (X3.0) -M	CM800N3640	28.0	20.0			
GMV-NX450P/A (X4.0) -M	CM800N3740	45.0	32.0	380-415V ~50Hz	R410A	
GMV-NDX125P/A-T	CM810N1220	12.5	10.0	220-240V ~50Hz & 208-230V ~60Hz	R410A	
GMV-NDX140P/A-T	CM810N1020	14.0	10.0			
GMV-NDX224P/A-T	CM810N0260	22.4	16.0			
GMV-NDX250P/A-T	CM810N1230	25.0	20.0			
GMV-NDX280P/A-T	CM810N0270	28.0	20.0			

1.11 Slim Duct Type

Model	Product Code	Cooling Capacity	Heating Capacity	Power Supply	Refrigerant	Appearance
		kW	kW			
GMV-ND22PL/B-T	CM800N3560	2.2	2.5	220-240V ~50Hz 208-230V ~60Hz	R410A	
GMV-ND25PL/B-T	CM810N0010	2.5	2.8			
GMV-ND28PL/B-T	CM810N0020	2.8	3.2			
GMV-ND32PL/B-T	CM800N3570	3.2	3.6			
GMV-ND36PL/B-T	CM810N0030	3.6	4.0			
GMV-ND40PL/B-T	CM800N3580	4.0	4.5			
GMV-ND45PL/B-T	CM810N0040	4.5	5.0			
GMV-ND50PL/B-T	CM810N0050	5.0	5.6			
GMV-ND56PL/B-T	CM800N3590	5.6	6.3			
GMV-ND63PL/B-T	CM810N0060	6.3	7.0			
GMV-ND72PL/B-T	CM800N3600	7.2	8.0			
GMV-ND22PLS/B1-T	CM810N1580	2.2	2.5	220-240V ~50Hz 208-230V ~60Hz	R410A	
GMV-ND25PLS/B1-T	CM810N1570	2.5	2.8			
GMV-ND28PLS/B1-T	CM810N1340	2.8	3.2			
GMV-ND32PLS/B1-T	CM810N1560	3.2	3.6			
GMV-ND36PLS/B1-T	CM810N1330	3.6	4.0			
GMV-ND40PLS/B1-T	CM810N1550	4.0	4.5			
GMV-ND45PLS/B1-T	CM810N1350	4.5	5.0			
GMV-ND50PLS/B1-T	CM810N1540	5.0	5.6			
GMV-ND56PLS/B1-T	CM810N1530	5.6	6.3			
GMV-ND63PLS/B1-T	CM810N1360	6.3	7.0			
GMV-ND71PLS/B1-T	CM810N1370	7.1	8.0			

1.12 Air Handler Type Indoor Unit

Model	Product Code	Cooling Capacity	Heating Capacity	Power Supply	Refrigerant	Appearance
		kW	kW			
GMV-NR71A/A-D	CM810N0200	7.1	8.0	208-230 V~60Hz	R410A	
GMV-NR90A/A-D	CM810N0210	9.0	10.0			
GMV-NR100A/A-D	CM810N0220	10.0	11.0			
GMV-NR112A/A-D	CM810N0230	11.2	12.5			
GMV-NR140A/A-D	CM810N0240	14.0	15.0			

1.13 Console Type Indoor Unit

Model	Product Code	Cooling Capacity	Heating Capacity	Power Supply	Refrigerant	Appearance
		kW	kW			
GMV-ND22C/A-T	CM400N0140	2.2	2.5	220-240V ~50Hz 208-230V ~60Hz	R410A	
GMV-ND28C/A-T	CM400N0070	2.8	3.2			
GMV-ND36C/A-T	CM400N0080	3.6	4.0			
GMV-ND45C/A-T	CM400N0150	4.5	5.0			
GMV-ND50C/A-T	CM400N0090	5.0	5.5			

1.14 Wall Mounted Type Indoor Unit

Model	Product Code	Cooling Capacity	Heating Capacity	Power Supply	Refrigerant	Appearance
		kW	kW			
GMV-N22G/A3A-K	CM100N1350	2.2	2.5	220-240V~ 50Hz	R410A	
GMV-N28G/A3A-K	CM100N1340	2.8	3.2			
GMV-N36G/A3A-K	CM100N1360	3.6	4.0			
GMV-N45G/A3A-K	CM100N1370	4.5	5.0			
GMV-N50G/A3A-K	CM100N1330	5.0	5.8			
GMV-N56G/A3A-K	CM100N1380	5.6	6.3			
GMV-N63G/A3A-K	CM100N1390	6.3	7.0			
GMV-N71G/A3A-K	CM100N1320	7.1	7.5			
GMV-N22G/A2A-K	CM100N1690	2.2	2.5	220-240V~ 50Hz	R410A	
GMV-N28G/A2A-K	CM100N1700	2.8	3.2			
GMV-N36G/A2A-K	CM100N1710	3.6	4.0			
GMV-N45G/A2A-K	CM100N1720	4.5	5.0			
GMV-N50G/A2A-K	CM100N1730	5.0	5.8			
GMV-N56G/A2A-K	CM100N1740	5.6	6.3			
GMV-N63G/A2A-K	CM100N1750	6.3	7.0			
GMV-N71G/A2A-K	CM100N1760	7.1	7.5			
GMV-N22G/A4A-K	CM100N1530	2.2	2.5	220-240V~ 50Hz		
GMV-N28G/A4A-K	CM100N1540	2.8	3.2			
GMV-N36G/A4A-K	CM100N1550	3.6	4.0			
GMV-N45G/A4A-K	CM100N1560	4.5	5.0			
GMV-N50G/A4A-K	CM100N1570	5.0	5.8			
GMV-N56G/A4A-K	CM100N1580	5.6	6.3			
GMV-N63G/A4A-K	CM100N1590	6.3	7.0			
GMV-N71G/A4A-K	CM100N1600	7.1	7.5			

Model	Product Code	Cooling Capacity	Heating Capacity	Power Supply	Refrigerant	Appearance
		kW	kW			
GMV-N22G/A8A-K	CM100N1770	2.2	2.5	220-240V~50Hz	R410A	
GMV-N28G/A8A-K	CM100N1780	2.8	3.2			
GMV-N36G/A8A-K	CM100N1790	3.6	4.0			
GMV-N45G/A8A-K	CM100N1800	4.5	5.0			
GMV-N50G/A8A-K	CM100N1810	5.0	5.8			
GMV-N56G/A8A-K	CM100N1820	5.6	6.3			
GMV-N63G/A8A-K	CM100N1830	6.3	7.0			
GMV-N71G/A8A-K	CM100N1840	7.1	7.5			
GMV-N22G/B3A-K	CM100N2460	2.2	2.5	220-240V~50Hz	R410A	
GMV-N28G/B3A-K	CM100N2470	2.8	3.2			
GMV-N36G/B3A-K	CM100N2480	3.6	4.0			
GMV-N45G/B3A-K	CM100N2490	4.5	5.0			
GMV-N50G/B3A-K	CM100N2500	5.0	5.8			
GMV-N56G/B3A-K	CM100N2510	5.6	6.3			
GMV-N63G/B3A-K	CM100N2520	6.3	7.0			
GMV-N71G/B3A-K	CM100N2530	7.1	7.5			
GMV-N22G/C9A-K	CM100N1850	2.2	2.5	220-240V~50Hz		
GMV-N28G/C9A-K	CM100N1860	2.8	3.2			
GMV-N36G/C9A-K	CM100N1870	3.6	4.0			
GMV-N45G/C9A-K	CM100N1880	4.5	5.0			
GMV-N50G/C9A-K	CM100N1890	5.0	5.8			
GMV-N56G/C9A-K	CM100N1900	5.6	6.3			
GMV-N63G/C9A-K	CM100N1910	6.3	7.0			
GMV-N71G/C9A-K	CM100N1920	7.1	7.5			
GMV-N22G/E3A-K	CM100N2170	2.2	2.5	220-240V~50Hz		
GMV-N28G/E3A-K	CM100N2180	2.8	3.2			
GMV-N36G/E3A-K	CM100N2190	3.6	4.0			
GMV-N45G/E3A-K	CM100N2200	4.5	5.0			
GMV-N50G/E3A-K	CM100N2210	5.0	5.8			
GMV-N56G/E3A-K	CM100N2220	5.6	6.3			
GMV-N63G/E3A-K	CM100N2230	6.3	7.0			
GMV-N71G/E3A-K	CM100N2240	7.1	7.5			

Model	Product Code	Cooling Capacity	Heating Capacity	Power Supply	Refrigerant	Appearance
		kW	kW			
GMV-N22G/A3A-D	CM100N1430	2.2	2.5	208-230V~60Hz	R410A	
GMV-N28G/A3A-D	CM100N1400	2.8	3.2			
GMV-N36G/A3A-D	CM100N1440	3.6	4.0			
GMV-N45G/A3A-D	CM100N1450	4.5	5.0			
GMV-N50G/A3A-D	CM100N1410	5.0	5.8			
GMV-N56G/A3A-D	CM100N1460	5.6	6.3			
GMV-N63G/A3A-D	CM100N1470	6.3	7.0			
GMV-N71G/A3A-D	CM100N1420	7.1	7.5			

Model	Product Code	Cooling Capacity	Heating Capacity	Power Supply	Refrigerant	Appearance
		kW	kW			
GMV-N22G/A2A-D	CM100N1930	2.2	2.5	208-230V~60Hz	R410A	
GMV-N28G/A2A-D	CM100N1940	2.8	3.2			
GMV-N36G/A2A-D	CM100N1950	3.6	4.0			
GMV-N45G/A2A-D	CM100N1960	4.5	5.0			
GMV-N50G/A2A-D	CM100N1970	5.0	5.8			
GMV-N56G/A2A-D	CM100N1980	5.6	6.3			
GMV-N63G/A2A-D	CM100N1990	6.3	7.0			
GMV-N71G/A2A-D	CM100N2000	7.1	7.5			
GMV-N22G/A4A-D	CM100N1610	2.2	2.5	208-230V~60Hz	R410A	
GMV-N28G/A4A-D	CM100N1620	2.8	3.2			
GMV-N36G/A4A-D	CM100N1630	3.6	4.0			
GMV-N45G/A4A-D	CM100N1640	4.5	5.0			
GMV-N50G/A4A-D	CM100N1650	5.0	5.8			
GMV-N56G/A4A-D	CM100N1660	5.6	6.3			
GMV-N63G/A4A-D	CM100N1670	6.3	7.0			
GMV-N71G/A4A-D	CM100N1680	7.1	7.5			
GMV-N22G/A8A-D	CM100N2010	2.2	2.5	208-230V~60Hz	R410A	
GMV-N28G/A8A-D	CM100N2020	2.8	3.2			
GMV-N36G/A8A-D	CM100N2030	3.6	4.0			
GMV-N45G/A8A-D	CM100N2040	4.5	5.0			
GMV-N50G/A8A-D	CM100N2050	5.0	5.8			
GMV-N56G/A8A-D	CM100N2060	5.6	6.3			
GMV-N63G/A8A-D	CM100N2070	6.3	7.0			
GMV-N71G/A8A-D	CM100N2080	7.1	7.5			
GMV-N22G/C9A-D	CM100N2090	2.2	2.5	208-230V~60Hz		
GMV-N28G/C9A-D	CM100N2100	2.8	3.2			
GMV-N36G/C9A-D	CM100N2110	3.6	4.0			
GMV-N45G/C9A-D	CM100N2120	4.5	5.0			
GMV-N50G/C9A-D	CM100N2130	5.0	5.8			
GMV-N56G/C9A-D	CM100N2140	5.6	6.3			
GMV-N63G/C9A-D	CM100N2150	6.3	7.0			
GMV-N71G/C9A-D	CM100N2160	7.1	7.5			
GMV-N22G/E3A-D	CM100N2250	2.2	2.5	208-230V~60Hz		
GMV-N28G/E3A-D	CM100N2260	2.8	3.2			
GMV-N36G/E3A-D	CM100N2270	3.6	4.0			
GMV-N45G/E3A-D	CM100N2280	4.5	5.0			
GMV-N50G/E3A-D	CM100N2290	5.0	5.8			
GMV-N56G/E3A-D	CM100N2300	5.6	6.3			
GMV-N63G/E3A-D	CM100N2310	6.3	7.0			
GMV-N71G/E3A-D	CM100N2320	7.1	7.5			

Model	Product Code	Cooling Capacity	Heating Capacity	Power Supply	Refrigerant	Appearance
		kW	kW			
GMV-N22G/B3A-D	CM100N2380	2.2	2.5	208-230V~60Hz	R410A	
GMV-N28G/B3A-D	CM100N2390	2.8	3.2			
GMV-N36G/B3A-D	CM100N2400	3.6	4.0			
GMV-N45G/B3A-D	CM100N2410	4.5	5.0			
GMV-N50G/B3A-D	CM100N2420	5.0	5.8			
GMV-N56G/B3A-D	CM100N2430	5.6	6.3			
GMV-N63G/B3A-D	CM100N2440	6.3	7.0			
GMV-N71G/B3A-D	CM100N2450	7.1	7.5			
GMV-ND22G/A3A-T	CM100N2560	2.2	2.5	220-240V~50Hz 208-230V~60Hz	R410A	
GMV-ND28G/A3A-T	CM100N2600	2.8	3.2			
GMV-ND36G/A3A-T	CM100N2590	3.6	4.0			
GMV-ND45G/A3A-T	CM100N2580	4.5	5.0			
GMV-ND50G/A3A-T	CM100N2610	5.0	5.8			
GMV-ND56G/A3A-T	CM100N2570	5.6	6.3			
GMV-ND63G/A3A-T	CM100N2550	6.3	7.0			
GMV-ND71G/A3A-T	CM100N2540	7.1	7.5			
GMV-ND80G/A3A-T	CM100N2620	8.0	9.0			
GMV-ND90G/A3A-T	CM100N2630	9.0	10.0			
GMV-ND100G/A3A-T	CM100N2640	9.5	10.5			
GMV-ND22G/A8A-T	CM100N2670	2.2	2.5	220-240V~50Hz 208-230V~60Hz	R410A	
GMV-ND28G/A8A-T	CM100N2720	2.8	3.2			
GMV-ND36G/A8A-T	CM100N2710	3.6	4.0			
GMV-ND45G/A8A-T	CM100N2650	4.5	5.0			
GMV-ND50G/A8A-T	CM100N2700	5.0	5.8			
GMV-ND56G/A8A-T	CM100N2690	5.6	6.3			
GMV-ND63G/A8A-T	CM100N2680	6.3	7.0			
GMV-ND71G/A8A-T	CM100N2660	7.1	7.5			
GMV-ND80G/A8A-T	CM100N2740	8.0	9.0			
GMV-ND90G/A8A-T	CM100N2750	9.0	10.0			
GMV-ND100G/A8A-T	CM100N2730	9.5	10.5			
GMV-ND15G/B6B-T	CM100N3300	1.5	1.8	220-240V~50Hz 208-230V~60Hz	R410A	
GMV-ND18G/B6B-T	CM100N3310	1.8	2.2			
GMV-ND22G/B6B-T	CM100N3240	2.2	2.5			
GMV-ND28G/B6B-T	CM100N3270	2.8	3.2			
GMV-ND36G/B6B-T	CM100N3210	3.6	4.0			
GMV-ND45G/B6B-T	CM100N3250	4.5	5.0			
GMV-ND50G/B6B-T	CM100N3200	5.0	5.6			
GMV-ND56G/B6B-T	CM100N3260	5.6	6.3			
GMV-ND63G/B6B-T	CM100N3230	6.3	7.1			
GMV-ND71G/B6B-T	CM100N3220	7.1	7.5			

Model	Product Code	Cooling Capacity	Heating Capacity	Power Supply	Refrigerant	Appearance
		kW	kW			
GMV-ND15G/B4B-T	CM100N3280	1.5	1.8	220-240V~50Hz 208-230V~60Hz	R410A	
GMV-ND18G/B4B-T	CM100N3290	1.8	2.2			
GMV-ND22G/B4B-T	CM100N2770	2.2	2.5			
GMV-ND28G/B4B-T	CM100N2780	2.8	3.2			
GMV-ND36G/B4B-T	CM100N2760	3.6	4.0			
GMV-ND45G/B4B-T	CM100N2790	4.5	5.0			
GMV-ND50G/B4B-T	CM100N2800	5.0	5.6			
GMV-ND56G/B4B-T	CM100N2810	5.6	6.3			
GMV-ND63G/B4B-T	CM100N2820	6.3	7.1			
GMV-ND71G/B4B-T	CM100N2830	7.1	7.5			
GMV-ND80G/B4B-T	CM100N2930	8.0	9.0			
GMV-ND90G/B4B-T	CM100N2940	9.0	10.0			
GMV-ND100G/B4B-T	CM100N2840	9.5	10.5			
GMV-ND22G/C4B-T	CM100N3140	2.2	2.5	220-240V~50Hz 208-230V~60Hz	R410A	
GMV-ND28G/C4B-T	CM100N3130	2.8	3.2			
GMV-ND36G/C4B-T	CM100N3150	3.6	4.0			
GMV-ND45G/C4B-T	CM100N3120	4.5	5.0			
GMV-ND50G/C4B-T	CM100N3160	5.0	5.6			
GMV-ND56G/C4B-T	CM100N3170	5.6	6.3			
GMV-ND63G/C4B-T	CM100N3180	6.3	7.1			
GMV-ND71G/C4B-T	CM100N3190	7.1	7.5			
GMV-ND22G/C2B-T	CM100N3040	2.2	2.5	220-240V~50Hz 208-230V~60Hz	R410A	
GMV-ND28G/C2B-T	CM100N3080	2.8	3.2			
GMV-ND36G/C2B-T	CM100N3050	3.6	4.0			
GMV-ND45G/C2B-T	CM100N3060	4.5	5.0			
GMV-ND50G/C2B-T	CM100N3070	5.0	5.6			
GMV-ND56G/C2B-T	CM100N3110	5.6	6.3			
GMV-ND63G/C2B-T	CM100N3100	6.3	7.1			
GMV-ND71G/C2B-T	CM100N3090	7.1	7.5			
GMV-ND22G/D2B-T	CM100N2850	2.2	2.5	220-240V~50Hz 208-230V~60Hz	R410A	
GMV-ND28G/D2B-T	CM100N2860	2.8	3.2			
GMV-ND36G/D2B-T	CM100N2870	3.6	4.0			
GMV-ND45G/D2B-T	CM100N2880	4.5	5.0			
GMV-ND50G/D2B-T	CM100N2890	5.0	5.6			
GMV-ND56G/D2B-T	CM100N2900	5.6	6.3			
GMV-ND63G/D2B-T	CM100N2910	6.3	7.1			
GMV-ND71G/D2B-T	CM100N2920	7.1	7.5			

1.15 Super High Static Pressure Duct Type Indoor Unit

Model	Product Code	Cooling Capacity	Heating Capacity	Power Supply	Refrigerant	Appearance
		kW	kW			
GMV-ND22PHS/B-T	CM810N0300	2.2	2.5	220-240V ~50Hz 208-230V ~60Hz	R410A	
GMV-ND25PHS/B-T	CM810N0310	2.5	2.8			
GMV-ND28PHS/B-T	CM810N0320	2.8	3.2			
GMV-ND32PHS/B-T	CM810N0330	3.2	3.6			
GMV-ND36PHS/B-T	CM810N0340	3.6	4.0			
GMV-ND40PHS/B-T	CM810N0350	4.0	4.5			
GMV-ND45PHS/B-T	CM810N0360	4.5	5.0			
GMV-ND50PHS/B-T	CM810N0370	5.0	5.6			

Model	Product Code	Cooling Capacity	Heating Capacity	Power Supply	Refrigerant	Appearance
		kW	kW			
GMV-ND56PHS/B-T	CM810N0380	5.6	6.3	220-240V ~50Hz 208-230V ~60Hz	R410A	
GMV-ND63PHS/B-T	CM810N0390	6.3	7.1			
GMV-ND71PHS/B-T	CM810N0400	7.1	8.0			
GMV-ND80PHS/B-T	CM810N0410	8.0	9.0			
GMV-ND90PHS/B-T	CM810N0420	9.0	10.0	220-240V ~50Hz 208-230V ~60Hz	R410A	
GMV-ND100PHS/B-T	CM810N0430	10.0	11.2			
GMV-ND112PHS/B-T	CM810N0440	11.2	12.5			
GMV-ND125PHS/B-T	CM810N0450	12.5	14.0			
GMV-ND140PHS/B-T	CM810N0460	14.0	16.0			
GMV-ND160PHS/B-T	CM810N0840	16.0	18.0			
GMV-ND180PHS/B-T	CM810N2240	18.0	20.0			
GMV-ND400PH/AR-X	CM810N1510	40.0	45.0	380-415V 3N ~ 50/ 60Hz	R410A	
GMV-ND450PH/AR-X	CM810N1520	45.0	50.0			
GMV-N560PH/AR-M	CM810N1610	56.0	63.0	380V 3N ~ 50Hz		

1.16 AHU-KIT Type

Model	Product Code	Cooling Capacity	Heating Capacity	Power Supply	Refrigerant	Appearance
		kW	kW			
GMV-N36U/A-T	CN750N0040	3.6	4.0	220-240V~50Hz 208-230V~60Hz	R410A	
GMV-N71U/A-T	CN750N0050	7.1	8.0			
GMV-N140U/A-T	CN750N0030	14.0	16.0			
GMV-N280U/A-T	CN750N0020	28.0	31.5			
GMV-N560U/A-T	CN750N0010	56.0	63.0			
GMV-N36U/B-T	CN750N0110	3.6	4.0	220-240V ~50Hz 208-230V ~60Hz	R410A	
GMV-N71U/B-T	CN750N0150	7.1	8.0			
GMV-N140U/B-T	CN750N0140	14.0	16.0			
GMV-N280U/B-T	CN750N0120	28.0	31.5			

Model	Product Code	Cooling Capacity	Heating Capacity	Power Supply	Refrigerant	Appearance
		kW	kW			
GMV-N560U/B-T	CN750N0130	56.0	63.0	220-240V ~50Hz 208-230V ~60Hz	R410A	
GMV-N36U/C-T	CN750N0190	3.6	4.0	220-240V ~50Hz 208-230V ~60Hz	R410A	
GMV-N71U/C-T	CN750N0200	7.1	8.0			
GMV-N140U/C-T	CN750N0180	14.0	16.0			
GMV-N280U/C-T	CN750N0170	28.0	31.5	220-240V ~50Hz 208-230V ~60Hz	R410A	
GMV-N560U/C-T	CN750N0160	56.0	63.0			

1.17 Concealed Floor Standing Type

Model	Product Code	Cooling Capacity	Heating Capacity	Power Supply	Refrigerant	Appearance
		kW	kW			
GMV-ND22ZA/A-T	CM810N1490	2.2	2.5	220-240V ~50Hz 208-230V ~60Hz	R410A	
GMV-ND28ZA/A-T	CM810N1480	2.8	3.2			
GMV-ND36ZA/A-T	CM810N1460	3.6	4.0			
GMV-ND45ZA/A-T	CM810N1470	4.5	5.0			
GMV-ND56ZA/A-T	CM810N1451	5.6	6.3			
GMV-ND63ZA/A-T	CM810N1440	6.3	7.1			
GMV-ND71ZA/A-T	CM810N1430	7.1	8.0			

1.18 360°Air Discharge Cassette

Model	Product Code	Cooling Capacity	Heating Capacity	Power Supply	Refrigerant	Appearance
		kW	kW			
GMV-ND22T/C-T	CM500N1680	2.2	2.5	220-240V~50Hz 208-230V~60Hz	R410A	
GMV-ND28T/C-T	CM500N1660	2.8	3.2			
GMV-ND36T/C-T	CM500N1670	3.6	4.0			
GMV-ND45T/C-T	CM500N1650	4.5	5.0			
GMV-ND50T/C-T	CM500N1640	5.0	5.6	220-240V~50Hz 208-230V~60Hz	R410A	
GMV-ND56T/C-T	CM500N1630	5.6	6.3			
GMV-ND63T/C-T	CM500N1440	6.3	7.1			
GMV-ND71T/C-T	CM500N1370	7.1	8.0			
GMV-ND80T/C-T	CM500N1430	8.0	9.0			
GMV-ND90T/C-T	CM500N1420	9.0	10			
GMV-ND100T/C-T	CM500N1380	10	11.2			
GMV-ND112T/C-T	CM500N1400	11.2	12.5			
GMV-ND125T/C-T	CM500N1410	12.5	14			
GMV-ND140T/C-T	CM500N1360	14	16			
GMV-ND160T/C-T	CM500N1710	16	18			
GMV-ND22T/C1-T	CM500N1850	2.2	2.5	220-240V~50Hz 208-230V~60Hz	R410A	
GMV-ND28T/C1-T	CM500N1860	2.8	3.2			
GMV-ND36T/C1-T	CM500N1820	3.6	4.0			
GMV-ND45T/C1-T	CM500N1730	4.5	5.0			
GMV-ND50T/C1-T	CM500N1720	5.0	5.6			
GMV-ND22T/D1-T	CM500N2170	2.2	2.5	220-240V~50Hz 208-230V~60Hz	R410A	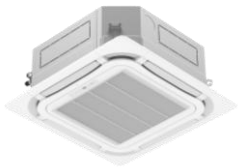
GMV-ND28T/D1-T	CM500N2130	2.8	3.2			
GMV-ND36T/D1-T	CM500N2120	3.6	4.0			
GMV-ND45T/D1-T	CM500N2160	4.5	5.0			
GMV-ND50T/D1-T	CM500N2010	5.0	5.6			
GMV-ND56T/D1-T	CM500N2100	5.6	6.3			
GMV-ND63T/D1-T	CM500N2160	6.3	7.1			
GMV-ND71T/D1-T	CM500N2030	7.1	8.0			
GMV-ND80T/D1-T	CM500N2110	8.0	9.0			
GMV-ND90T/D1-T	CM500N2190	9.0	10			
GMV-ND100T/D1-T	CM500N2140	10	11.2			
GMV-ND112T/D1-T	CM500N2020	11.2	12.5			
GMV-ND125T/D1-T	CM500N2150	12.5	14			
GMV-ND140T/D1-T	CM500N2040	14	16			

1.19 Heat Storage Module

Model	Product Code	Cooling Capacity	Heating Capacity	Power Supply	Refrigerant	Appearance
		kW	kW			
XRZ180L/A-T	CM810N2250	/	/	220-240V~50Hz 208-230V~60Hz	R410A	

1.20 High Static Pressure Duct Type Indoor Unit

Model	Product Code	Cooling Capacity	Heating Capacity	Power Supply	Refrigerant	Appearance
		kW	kW			
GMV-ND22PHS/D-T	CM810N2490	2.2	2.5	220-240V ~50Hz 208-230V ~60Hz	R410A	
GMV-ND25PHS/D-T	CM810N2420	2.5	2.8			
GMV-ND28PHS/D-T	CM810N2430	2.8	3.2			
GMV-ND32PHS/D-T	CM810N2500	3.2	3.6			
GMV-ND36PHS/D-T	CM810N2410	3.6	4.0			
GMV-ND40PHS/D-T	CM810N2440	4.0	4.5			
GMV-ND45PHS/D-T	CM810N2510	4.5	5.0			
GMV-ND50PHS/D-T	CM810N2400	5.0	5.6			
GMV-ND56PHS/D-T	CM810N2450	5.6	6.3			
GMV-ND63PHS/D-T	CM810N2370	6.3	7.1			
GMV-ND71PHS/D-T	CM810N2460	7.1	8.0			
GMV-ND80PHS/D-T	CM810N2360	8.0	9.0			
GMV-ND90PHS/D-T	CM810N2470	9.0	10.0			
GMV-ND100PHS/D-T	CM810N2520	10.0	11.2			
GMV-ND112PHS/D-T	CM810N2480	11.2	12.5			
GMV-ND125PHS/D-T	CM810N2390	12.5	14.0			
GMV-ND140PHS/D-T	CM810N2530	14.0	16.0			
GMV-ND160PHS/D-T	CM810N2380	16.0	18.0			
GMV-ND180PHS/D-T	CM810N2240	18.0	20.0			

2 Nomenclature

2.1 Nomenclature of Indoor Units

GMV	-	N	□	□	□	□	□	/	□	-	□
1		2	3	4	5	6	7		8		9

No.	Description	Options
1	Product code	GMV - Gree Multi VRF Units
2	Indoor unit code	Indoor unit - N
3	Motor type	D - DC motor NULL - AC motor
4	Function code	R - pure heat pump/ all heat exchanger with cooling function L - cooling only unit X - fresh air W - double thermal source Q - heat recovery Null - electric heating defaulted
5	Cooling capacity/air volume code	Indoor unit - norminal cooling capacity /100(W) All heat exchanger - air volume /100(m^3/h)
6	Unit type	PL- low static pressure duct type unit; P - standard static pressure duct type unit PH - high static pressure duct type unit; PB - slim type duct type unit T - 4-way cassette unit; TX - cassette unit with small panel (4-way air supply) A - Air handler; TD - one-way cassette unit; TS - two-way cassette unit; ZD - floor ceiling unit; ZK - combine unit C - console unit; G - wall-mounted unit; L - Floor Standing unit; U - AHU-KIT unit; ZA - Concealed Floor Standing unit
7	With water pump or not	With water pump - S (S is not displayed for the cassette unit with water pump)
8	Design serial No.	Nominate by A, B, C or expand it by 1, 2, 3…
9	Power	D - 220V~,60Hz; 208-230V~,60Hz; 220-240V~,60Hz; 208/230V~,60Hz; M - 380V 3N~, 50Hz;400V 3N~,50Hz; 380-415V 3N~,50Hz; K - 220-240V~,50Hz; 230-240V~,50Hz; T - 208-230V~,60Hz & 220-240V~,50Hz

Notes:

① If there's "(X+figure)"at the end of model, it indicates the fresh air handler. X——fresh air; Figure (take one decimal fraction) —— air volume (m^3/h) ×10-3. Eg: (X2.0).

② DC inverter fresh air processing indoor, airflow volume ranging from 2000m^3/h to 3500m^3/h are available, there's not "(X+figure)"at the end of model.

3 Specifications

3.1 Floor Standing Type

Model			GMV-ND100L/A-T	GMV-ND140L/A-T
Cooling capacity		kW	10.0	14.0
Heating capacity		kW	11.0	15.0
Circulating air volume		m³/h	1870	1870
Noise		dB(A)	50	50
Power supply			220-240V~50Hz 208-230V~60Hz	220-240V~50Hz 208-230V~60Hz
Rated power input	Cooling	kW	0.2	0.2
	Heating	kW	0.2	0.2
Unit Dimensions (mm)(W×D×H)			1850×580×400	
Package Dimensions (mm)(W×D×H)			2083×738×545	
Suitable climate			T1	T1
Connection pipe	Gas	mm	Φ15.9	Φ15.9
	Liquid	mm	Φ9.52	Φ9.52
	Connection Method		Bell mouth connection	Bell mouth connection
Net weight		kg	54	57

Notes:

① Units conform to design standard: ISO 15042-2011.

② Specifications may be changed due to product improvement. Please refer to nameplates of the units.

③ Noise data are collected from a semi-anechoic room. Decibels may be slightly higher in actual operation due to environmental change.

④ Above parameters are tested under the condition: high fan speed.

⑤ Cooling: Indoor air temperature 27°C DB/19°C WB.

⑥ Heating: Indoor air temperature 20°C DB/15°C WB.

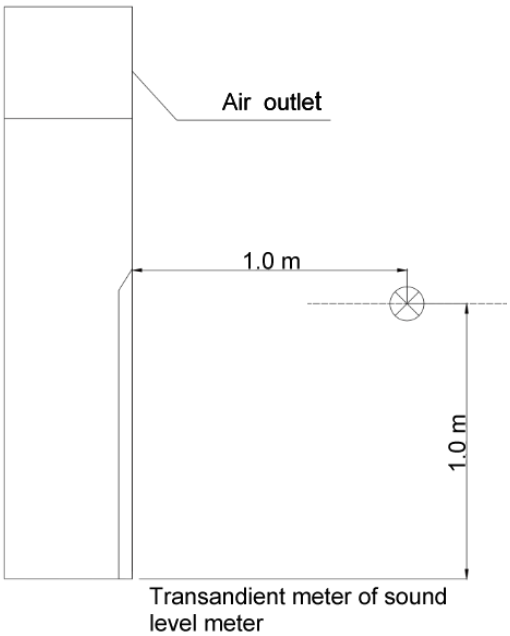

3.2 High Static Pressure Duct Type

Model			GMV-ND56PHS/A-T	GMV-ND63PHS/A-T	GMV-ND71PHS/A-T	GMV-ND80PHS/A-T	GMV-ND90PHS/A-T	GMV-ND100PHS/A-T
Cooling capacity		kW	5.6	6.3	7.1	8.0	9.0	10.0
Heating capacity		kW	6.3	7.1	8.0	9.0	10.0	11.2
Air volume		m³/h	1000	1000	1100	1100	1700	1700
Static pressure (Pa)		Standard	70	70	70	70	70	70
		Optional	0~100	0~100	0~100	0~100	0~100	0~100
Cooling power input		W	120	120	130	130	200	200
Cooling current input		A	0.6	0.6	0.6	0.6	1.0	1.0
Heating power input		W	120	120	130	130	200	200
Heating current input		A	0.6	0.6	0.6	0.6	1.0	1.0
Minimum line current		A	0.75	0.75	0.75	0.75	1.25	1.25
Maximum fuse current		A	6	6	6	6	6	6
Sound pressure level		dB(A)	44	44	45	45	46	46
Power supply			220-240V 1 phase ~50Hz/208-230V 1 phase ~60Hz					
Connection pipe	Liquid pipe	mm	Φ9.52	Φ9.52	Φ9.52	Φ9.52	Φ9.52	Φ9.52
	Gas pipe	mm	Φ15.9	Φ15.9	Φ15.9	Φ15.9	Φ15.9	Φ15.9
Drain pipe	External diameter ×thickness	mm	Φ20×1.2	Φ20×1.2	Φ20×1.2	Φ20×1.2	Φ20×1.2	Φ20×1.2
Outline Dimensions (W×D×H)		mm	1271×558×268	1271×558×268	1271×558×268	1271×558×268	1229×775×290	1229×775×290
Net weight		kg	35	35	35	35	47	47

Model			GMV-ND112PHS/A-T	GMV-ND125PHS/A-T	GMV-ND140PHS/A-T	GMV-ND160PHS/A-T	GMV-ND224PH/A-T	GMV-ND280PH/A-T
Cooling capacity		kW	11.2	12.5	14.0	16.0	22.4	28.0
Heating capacity		kW	12.5	14.0	16.0	17.0	25.0	31.0
Air volume		m³/h	1700	2000	2000	2650	4000	4400
Static pressure (Pa)		Standard	70	70	70	70	100	100
		Optional	0~100	0~100	0~100	0~150	50~200	50~200
Cooling power input		W	200	220	220	350	800	900
Cooling current input		A	1.0	1.0	1.0	1.5	3.7	4.1
Heating power input		W	200	220	220	350	800	900
Heating current input		A	1.0	1.0	1.0	1.5	3.7	4.1
Minimum line current		A	1.25	1.25	1.25	1.875	6	6
Maximum fuse current		A	6	6	6	10	10	10
Sound pressure level		dB(A)	46	48	48	50	54	55
Power supply			220-240V 1 phase ~50Hz/208-230V 1 phase ~60Hz					
Piping interface	Liquid pipe	mm	Φ9.52	Φ9.52	Φ9.52	Φ9.52	Φ9.52	Φ9.52
	Gas pipe	mm	Φ15.9	Φ15.9	Φ15.9	Φ19.05	Φ19.05	Φ22.2
Drain pipe	External diameter ×thickness	mm	Φ20×1.2	Φ20×1.2	Φ20×1.2	Φ20×1.2	Φ25×2	Φ25×2
Outline Dimensions (W×D×H)		mm	1229×775×290	1229×775×290	1229×775×290	1340×750×350	1483×791×385	1686×870×450
Net weight		kg	47	47	47	60	82	105

Notes:

① Rated cooling capacity test conditions: indoor 27°C DB/19°C WB, outdoor 35°C DB; connection pipe length: 5 m, without height drop between units.

② Rated heating capacity test conditions: indoor 20°C DB, outdoor 7°C DB/6 °C WB; connection pipe length: 5 m, without height drop between units.

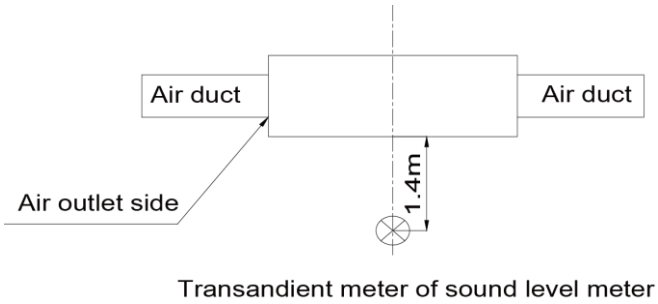

3.3 Low Static Pressure Duct Type

Model			GMV-ND22PLS/A-T	GMV-ND25PLS/A-T	GMV-ND28PLS/A-T	GMV-ND32PLS/A-T	GMV-ND36PLS/A-T	GMV-ND40PLS/A-T	GMV-ND45PLS/A-T	GMV-ND50PLS/A-T	GMV-ND56PLS/A-T
Cooling capacity		kW	2.2	2.5	2.8	3.2	3.6	4.0	4.5	5.0	5.6
Heating capacity		kW	2.5	2.8	3.2	3.6	4.0	4.5	5.0	5.6	6.3
Air Volume		m³/h	450	450	450	550	550	700	700	700	1000
ESP		Pa	15/0~30	15/0~30	15/0~30	15/0~30	15/0~30	15/0~30	15/0~30	15/0~30	15/0~30
Cooling power input		W	35	35	35	43	43	52	52	52	99
Cooling current input		A	0.2	0.2	0.2	0.2	0.2	0.3	0.3	0.3	0.5
Heating power input		W	35	35	35	43	43	52	52	52	99
Heating current input		A	0.2	0.2	0.2	0.2	0.2	0.3	0.3	0.3	0.5
Minimum line current		A	0.25	0.25	0.25	0.25	0.25	0.38	0.38	0.38	0.63
Maximum fuse current		A	6	6	6	6	6	6	6	6	6
Sound pressure level		dB(A)	31	31	31	32	32	33	33	33	35
Power supply			220-240V 1 phase ~50Hz/208-230V 1 phase ~60Hz								
Pipe diameter	Liquid pipe	mm	Φ6.35	Φ6.35	Φ6.35	Φ6.35	Φ6.35	Φ6.35	Φ6.35	Φ6.35	Φ9.52
	Gas pipe	mm	Φ9.52	Φ9.52	Φ9.52	Φ12.7	Φ12.7	Φ12.7	Φ12.7	Φ12.7	Φ15.9
Drain pipe	External diameter ×thickness	mm	Φ25×2.5	Φ25×2.5	Φ25×2.5	Φ25×2.5	Φ25×2.5	Φ25×2.5	Φ25×2.5	Φ25×2.5	Φ25×2.5
Outline Dimensions	W×D×H	mm	700×615×200	700×615×200	700×615×200	700×615×200	700×615×200	900×615×200	900×615×200	900×615×200	1100×615×200
Net weight		kg	22	22	22	22	22	27	27	27	31

Model		GMV-ND63PLS/A-T	GMV-ND71PLS/A-T	GMV-ND80PLS/A-T	GMV-ND90PLS/A-T	GMV-ND100PLS/A-T	GMV-ND112PLS/A-T	GMV-ND125PLS/A-T	GMV-ND140PLS/A-T
Cooling capacity	kW	6.3	7.1	8.0	9.0	10.0	11.2	12.5	14.0
Heating capacity	kW	7.1	8.0	9.0	10.0	11.2	12.5	14.0	16.0
Air volume	m³/h	1000	1000	1100	1500	1500	1700	2000	2000
Unit external static pressure	Pa	15/0~30	30/0~50	30/0~50	30/0~50	30/0~50	30/0~50	30/0~50	30/0~50
Cooling power input	W	99	105	140	209	209	209	230	230
Cooling current input	A	0.5	0.5	0.7	1.0	1.0	1.0	1.1	1.1
Heating power input	W	99	105	140	209	209	209	230	230
Heating current input	A	0.5	0.5	0.7	1.0	1.0	1.0	1.1	1.1
Minimum line current	A	0.63	0.63	0.88	1.25	1.25	1.25	1.38	1.38
Maximum fuse current	A	6	6	6	6	6	6	6	6
Sound pressure level	dB(A)	35	35	36	40	40	40	42	42
Power supply		220-240V 1 phase ~50Hz/208-230V 1 phase ~60Hz							

Model			GMV-ND63PLS/A-T	GMV-ND71PLS/A-T	GMV-ND80PLS/A-T	GMV-ND90PLS/A-T	GMV-ND100PLS/A-T	GMV-ND112PLS/A-T	GMV-ND125PLS/A-T	GMV-ND140PLS/A-T
Pipe diameter	Liquid pipe	mm	Φ9.52	Φ9.52	Φ9.52	Φ9.52	Φ9.52	Φ9.52	Φ9.52	Φ9.52
	Gas pipe	mm	Φ15.9	Φ15.9	Φ15.9	Φ15.9	Φ15.9	Φ15.9	Φ15.9	Φ15.9
Drain pipe	External diameter ×thickness	mm	Φ25×2.5	Φ25×2.5	Φ25×2.5	Φ25×2.5	Φ25×2.5	Φ25×2.5	Φ25×2.5	Φ25×2.5
Outline Dimensions	W×D×H	mm	1100 ×615×200	1200 ×655×260	1200 ×655×260	1340 ×655×260	1340 ×655×260	1340 ×655×260	1340 ×655×260	1340 ×655×260
Net weight		kg	31	40	40	46	46	46	47	47

Model			GMV-ND18PLS/C-T	GMV-ND22PLS/C-T	GMV-ND25PLS/C-T	GMV-ND28PLS/C-T	GMV-ND32PLS/C-T	GMV-ND36PLS/C-T
Cooling capacity		kW	1.8	2.2	2.5	2.8	3.2	3.6
Heating capacity		kW	2.2	2.5	2.8	3.2	3.6	4.0
Air volume		m^3/h	450	450	450	450	550	550
Unit external static pressure		Pa	15/0~30	15/0~30	15/0~30	15/0~30	15/0~30	15/0~30
Cooling power input		W	28	28	28	28	37	37
Cooling current input		A	0.2	0.2	0.2	0.2	0.3	0.3
Heating power input		W	25	25	25	25	30	30
Heating current input		A	0.2	0.2	0.2	0.2	0.3	0.3
*Minimum line current		A	0.4	0.4	0.4	0.4	0.4	0.4
*Maximum fuse current		A	6	6	6	6	6	6
Sound pressure level		dB(A)	30	30	30	30	31	31
Power supply			220-240V 1 phase ~50Hz/208-230V 1 phase ~60Hz					
Piping interface	Liquid pipe	mm	Φ6.35	Φ6.35	Φ6.35	Φ6.35	Φ6.35	Φ6.35
	Gas pipe	mm	Φ9.52	Φ9.52	Φ9.52	Φ9.52	Φ12.7	Φ12.7
Drain pipe	External diameter × thickness	mm	Φ25×2.5	Φ25×2.5	Φ25×2.5	Φ25×2.5	Φ25×2.5	Φ25×2.5
Dimensions	W×D×H	mm	710×462×200	710×462×200	710×462×200	710×462×200	710×462×200	710×462×200
Net weight	Main body	kg	18.5	18.5	18.5	18.5	19	19

Model			GMV-ND40PLS/C-T	GMV-ND45PLS/C-T	GMV-ND50PLS/C-T	GMV-ND56PLS/C-T	GMV-ND63PLS/C-T	GMV-ND71PLS/C-T
Cooling capacity		kW	4.0	4.5	5.0	5.6	6.3	7.1
Heating capacity		kW	4.5	5.0	5.6	6.3	7.1	8.0
Unit external static pressure		Pa	15/0~30	15/0~30	15/0~30	15/0~30	15/0~30	15/0~50
Air volume		m^3/h	750	750	850	850	850	1100
Cooling power input		W	40	40	55	55	55	55
Cooling current input		A	0.3	0.3	0.4	0.4	0.4	0.5
Heating power input		W	35	35	45	45	45	50
Heating current input		A	0.3	0.3	0.4	0.4	0.4	0.5
*Minimum line current		A	0.4	0.4	0.6	0.6	0.6	0.8
*Maximum fuse current		A	6	6	6	6	6	6
Sound pressure level		dB(A)	33	33	35	35	35	37
Power supply			220-240V 1 phase ~50Hz/208-230V 1 phase ~60Hz					
Piping interface	Liquid pipe	mm	Φ6.35	Φ6.35	Φ6.35	Φ9.52	Φ9.52	Φ9.52
	Gas pipe	mm	Φ12.7	Φ12.7	Φ12.7	Φ15.9	Φ15.9	Φ15.9
Drain pipe	External diameter × thickness	mm	Φ25×2.5	Φ25×2.5	Φ25×2.5	Φ25×2.5	Φ25×2.5	Φ25×2.5

Model			GMV-ND40PLS/C-T	GMV-ND45PLS/C-T	GMV-ND50PLS/C-T	GMV-ND56PLS/C-T	GMV-ND63PLS/C-T	GMV-ND71PLS/C-T
Dimensions	W×D×H	mm	1010×462×200	1010×462×200	1010×462×200	1010×462×200	1010×462×200	1310×462×200
Net weight	Main body	kg	25	25	25	25	25	31

Model			GMV-ND80PLS/C-T	GMV-ND90PLS/C-T	GMV-ND100PLS/C-T	GMV-ND112PLS/C-T	GMV-ND125PLS/C-T	GMV-ND140PLS/C-T
Cooling capacity		kW	8.0	9.0	10.0	11.2	12.5	14.0
Heating capacity		kW	9.0	10.0	11.2	12.5	14.0	16.0
Air volume		m³/h	1250	1500	1500	1700	2000	2000
Unit external static pressure		Pa	50/0~80	50/0~80	50/0~80	50/0~80	50/0~80	50/0~80
Cooling power input		W	110	130	130	130	170	170
Cooling current input		A	0.53	0.63	0.63	0.63	0.8	0.8
Heating power input		W	110	130	130	130	170	170
Heating current input		A	0.53	0.63	0.63	0.63	0.8	0.8
Minimum line current		A	0.5	1.0	1.0	1.0	1.0	1.0
Maximum fuse current		A	0.8	1.9	1.9	1.9	1.9	1.9
Sound pressure level		dB(A)	37	40	40	40	42	42
Power supply			220-240V 1 phase ~50Hz/208-230V 1 phase ~60Hz					
Pipe diameter	Liquid pipe	mm	Φ9.52	Φ9.52	Φ9.52	Φ9.52	Φ9.52	Φ9.52
	Gas pipe	mm	Φ15.9	Φ15.9	Φ15.9	Φ15.9	Φ15.9	Φ15.9
Drain pipe	External diameter ×thickness	mm	Φ25×2.5	Φ25×2.5	Φ25×2.5	Φ25×2.5	Φ25×2.5	Φ25×2.5
Dimensions	W×D×H	mm	1200×655×260	1340×655×260	1340×655×260	1340×655 260	1340×655×260	1340×655×260
Net weight		kg	39	45.5	45.5	45.5	46.5	46.5

Model			GMV-ND18PLS/C1-T	GMV-ND22PLS/C1-T	GMV-ND25PLS/C1-T	GMV-ND28PLS/C1-T	GMV-ND32PLS/C1-T	GMV-ND36PLS/C1-T
Cooling capacity		kW	1.8	2.2	2.5	2.8	3.2	3.6
Heating capacity		kW	2.2	2.5	2.8	3.2	3.6	4.0
Air volume		m³/h	450	450	450	450	550	550
Unit external static pressure		Pa	15/0~30	15/0~30	15/0~30	15/0~30	15/0~30	15/0~30
Cooling power input		W	28	28	28	28	37	37
Cooling current input		A	0.2	0.2	0.2	0.2	0.3	0.3
Heating power input		W	25	25	25	25	30	30
Heating current input		A	0.2	0.2	0.2	0.2	0.3	0.3
*Minimum line current		A	0.4	0.4	0.4	0.4	0.4	0.4
*Maximum fuse current		A	6	6	6	6	6	6
Sound pressure level		dB(A)	30	30	30	30	31	31
Power supply			220-240V 1 phase ~50Hz/208-230V 1 phase ~60Hz					
Piping interface	Liquid pipe	mm	Φ6.35	Φ6.35	Φ6.35	Φ6.35	Φ6.35	Φ6.35
	Gas pipe	mm	Φ9.52	Φ9.52	Φ9.52	Φ9.52	Φ12.7	Φ12.7
Drain pipe	External diameter × thickness	mm	Φ25×2.5	Φ25×2.5	Φ25×2.5	Φ25×2.5	Φ25×2.5	Φ25×2.5
Dimensions	W×D×H	mm	710×462×200	710×462×200	710×462×200	710×462×200	710×462×200	710×462×200
Net weight	Main body	kg	18.5	18.5	18.5	18.5	19	19

Model			GMV-ND40PLS/C1-T	GMV-ND45PLS/C1-T	GMV-ND50PLS/C1-T	GMV-ND56PLS/C1-T	GMV-ND63PLS/C1-T	GMV-ND71PLS/C1-T	GMV-ND80PLS/C1-T
Cooling capacity		kW	4.0	4.5	5.0	5.6	6.3	7.1	8.0
Heating capacity		kW	4.5	5.0	5.6	6.3	7.1	8.0	9.0
Unit external static pressure		Pa	15/0~30	15/0~30	15/0~30	15/0~30	15/0~30	15/0~50	15/0~30
Air volume		m³/h	750	750	750	850	850	1100	1200
Cooling power input		W	40	40	40	55	55	55	55
Cooling current input		A	0.3	0.3	0.3	0.4	0.4	0.5	0.5
Heating power input		W	35	35	35	45	45	50	50
Heating current input		A	0.3	0.3	0.3	0.4	0.4	0.5	0.5
*Minimum line current		A	0.4	0.4	0.4	0.6	0.6	0.8	0.8
*Maximum fuse current		A	6	6	6	6	6	6	6
Sound pressure level		dB(A)	33	33	33	35	35	37	40
Power supply			220-240V 1 phase ~50Hz/208-230V 1 phase ~60Hz						
Piping interface	Liquid pipe	mm	Φ6.35	Φ6.35	Φ6.35	Φ9.52	Φ9.52	Φ9.52	Φ9.52
	Gas pipe	mm	Φ12.7	Φ12.7	Φ12.7	Φ15.9	Φ15.9	Φ15.9	Φ15.9
Drain pipe	External diameter × thickness	mm	Φ25×2.5	Φ25×2.5	Φ25×2.5	Φ25×2.5	Φ25×2.5	Φ25×2.5	Φ25×2.5
Dimensions	W×D×H	mm	1010×462×200	1010×462×200	1010×462×200	1010×462×200	1010×462×200	1310×462×200	1310×462×200
Net weight	Main body	kg	24	24	24	25	25	31	31

Notes:

① Rated cooling capacity test conditions: indoor 27°C DB/19°C WB, outdoor 35°C DB; connection pipe length: 5m, without height drop between units.

② Rated heating capacity test conditions: indoor 20°C DB, outdoor 7°C DB/6 °C WB; connection pipe length: 5m, without height drop between units.

③ In the column of "Unit external static pressure": The figure before "/" indicates the default external static pressure of unit before delivery, and the figures after indicate the adjustable static pressure range of unit.

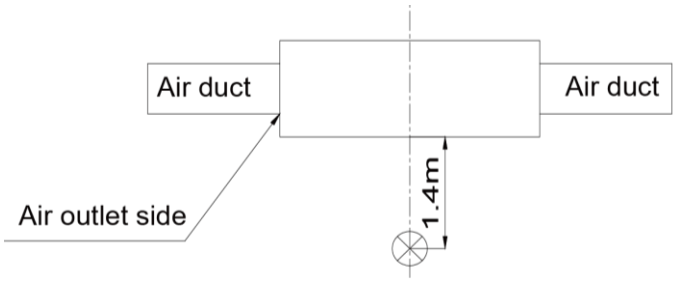

Transandient meter of sound level meter

3.4 4-way Cassette Type

Model			GMV-ND28T/A-T	GMV-ND36T/A-T	GMV-ND45T/A-T	GMV-ND50T/A-T	GMV-ND56T/A-T	GMV-ND63T/A-T	GMV-ND71T/A-T
Cooling capacity		kW	2.8	3.6	4.5	5.0	5.6	6.3	7.1
Heating capacity		kW	3.2	4.0	5.0	5.6	6.3	7.1	8.0
Air volume		m³/h	750	750	750	830	1000	1000	1180
Cooling power input		W	48	48	48	50	59	59	68
Cooling current input		A	0.2	0.2	0.2	0.2	0.3	0.3	0.3
Heating power input		W	48	48	48	50	59	59	68

Model			GMV-ND28T/A-T	GMV-ND36T/A-T	GMV-ND45T/A-T	GMV-ND50T/A-T	GMV-ND56T/A-T	GMV-ND63T/A-T	GMV-ND71T/A-T
Heating current input		A	0.2	0.2	0.2	0.2	0.3	0.3	0.3
Minimum line current		A	0.25	0.25	0.25	0.25	0.38	0.38	0.38
Maximum fuse current		A	6	6	6	6	6	6	6
Sound pressure level		dB(A)	36	36	36	36	37	37	38
Power supply			220-240V 1 phase ~50Hz/208-230V 1 phase ~60Hz						
Piping interface	Liquid pipe	mm	Φ6.35	Φ6.35	Φ6.35	Φ6.35	Φ9.52	Φ9.52	Φ9.52
	Gas pipe	mm	Φ9.52	Φ12.7	Φ12.7	Φ12.7	Φ15.9	Φ15.9	Φ15.9
Drain pipe	External diameter×thickness	mm	Φ25×2.5	Φ25×2.5	Φ25×2.5	Φ25×2.5	Φ25×2.5	Φ25×2.5	Φ25×2.5
Main body dimensions	W×D×H	mm	840×840×190	840×840×190	840×840×190	840×840×190	840×840×240	840×840×240	840×840×240
Panel dimensions	W×D×H	mm	950×950×65	950×950×65	950×950×65	950×950×65	950×950×65	950×950×65	950×950×65
Net weight	Main body	kg	22.5	22.5	22.5	22.5	26.5	26.5	26.5
	Panel	kg	7	7	7	7	7	7	7

Model			GMV-ND80T/A-T	GMV-ND90T/A-T	GMV-ND100T/A-T	GMV-ND112T/A-T	GMV-ND125T/A-T	GMV-ND140T/A-T	GMV-ND160T/A-T
Cooling capacity		kW	8.0	9.0	10.0	11.2	12.5	14.0	16.0
Heating capacity		kW	9.0	10.0	11.2	12.5	14.0	16.0	17.5
Air volume		m³/h	1180	1500	1500	1700	1860	1860	2100
Cooling power input		W	68	98	98	110	110	110	120
Cooling current input		A	0.3	0.4	0.4	0.5	0.5	0.5	0.6
Heating power input		W	68	98	98	110	110	110	120
Heating current input		A	0.3	0.4	0.4	0.5	0.5	0.5	0.6
Minimum line current		A	0.38	0.5	0.5	0.63	0.63	0.63	0.75
Maximum fuse current		A	6	6	6	6	6	6	6
Sound pressure level		dB(A)	38	40	40	41	43	43	47
Power supply			220-240V 1 phase ~50Hz/208-230V 1 phase ~60Hz						
Piping interface	Liquid pipe	mm	Φ9.52	Φ9.52	Φ9.52	Φ9.52	Φ9.52	Φ9.52	Φ9.52
	Gas pipe	mm	Φ15.9	Φ15.9	Φ15.9	Φ15.9	Φ15.9	Φ15.9	Φ15.9
Drain pipe	External diameter×thickness	mm	Φ25×2.5	Φ25×2.5	Φ25×2.5	Φ25×2.5	Φ25×2.5	Φ25×2.5	Φ25×2.5
Main body dimensions	W×D×H	mm	840×840×240	840×840×320	840×840×320	840×840×320	840×840×320	840×840×320	910×910×293
Panel dimensions	W×D×H	mm	950×950×65	950×950×65	950×950×65	950×950×65	950×950×65	950×950×65	1040×1040×65
Net weight	Main body	kg	26.5	32.5	32.5	32.5	32.5	32.5	46.5
	Panel	kg	7	7	7	7	7	7	7.5

Notes:

① Rated cooling capacity test conditions: indoor 27°C DB/19°C WB, outdoor 35°C DB; connection pipe length: 5 m, without height drop between units.

② Rated heating capacity test conditions: indoor 20°C DB, outdoor 7°C DB/6 °C WB; connection pipe length: 5 m, without height drop between units.

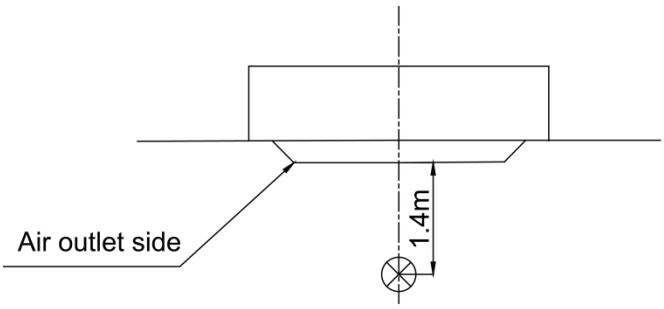

Transandient meter of sound level meter

3.5 Compact 4-way Cassette Type

Model			GMV-ND22 T/B-T	GMV-ND28 T/B-T	GMV-ND36 T/B-T	GMV-ND45 T/B-T	GMV-ND50 T/B-T	GMV-ND56 T/B-T
Cooling capacity		kW	2.2	2.8	3.6	4.5	5.0	5.6
Heating capacity		kW	2.5	3.2	4.0	5.0	5.6	6.3
Air volume		m³/h	600	600	600	700	700	700
Cooling power input		W	35	35	35	45	45	45
Cooling current input		A	0.4	0.4	0.4	0.5	0.5	0.5
Heating power input		W	35	35	35	45	45	45
Heating current input		A	0.4	0.4	0.4	0.5	0.5	0.5
Minimum line current		A	0.5	0.5	0.5	0.63	0.63	0.63
Maximum fuse current		A	6	6	6	6	6	6
Sound pressure level		dB(A)	41	41	41	45	45	45
Power supply			220-240V 1 phase ~50Hz/208-230V 1 phase ~60Hz					
Piping interface	Liquid pipe	mm	Φ6.35	Φ6.35	Φ6.35	Φ6.35	Φ6.35	Φ9.52
	Gas pipe	mm	Φ9.52	Φ9.52	Φ12.7	Φ12.7	Φ12.7	Φ15.9
Drain pipe	External diameter× Thickness	mm	Φ25×2.5	Φ25×2.5	Φ25×2.5	Φ25×2.5	Φ25×2.5	Φ25×2.5
Main body dimensions	W×D×H	mm	596×596×240	596×596×240	596×596×240	596×596×240	596×596×240	596×596×240
Panel dimensions	W×D×H	mm	670×670×50	670×670×50	670×670×50	670×670×50	670×670×50	670×670×50
Net weight	Main body	kg	20.5	20.5	20.5	20.5	20.5	20.5
	Panel	kg	3.5	3.5	3.5	3.5	3.5	3.5

Notes:

① Rated cooling capacity test conditions: indoor 27°C DB/19°C WB, outdoor 35°C DB; connection pipe length: 5 m, without height drop between units.

② Rated heating capacity test conditions: indoor 20°C DB, outdoor 7°C DB/6 °C WB; connection pipe length: 5 m, without height drop between units.

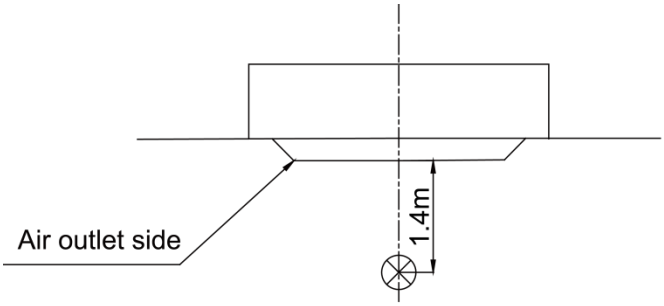

Transandient meter of sound level meter

3.6 360°Air Discharge Compact Cassette

Model			GMV-ND15T/E-T	GMV-ND18T/E-T	GMV-ND22T/E-T	GMV-ND28T/E-T	GMV-ND36T/E-T	GMV-ND45T/E-T	GMV-ND50T/E-T	GMV-ND56T/E-T
Cooling capacity		kW	1.5	1.8	2.2	2.8	3.6	4.5	5.0	5.6
Heating capacity		kW	1.8	2.2	2.5	3.2	4.0	5.0	5.6	6.3
Air volume(H/M/L)		m³/h	460/420/370	460/420/370	500/460/370	570/480/420	620/550/480	730/650/560	730/650/560	730/650/560
Cooling power input		W	30	30	30	30	30	45	45	45
Cooling current input		A	0.15	0.15	0.15	0.15	0.15	0.23	0.23	0.23
Heating power input		W	30	30	30	30	30	45	45	45
Heating current input		A	0.15	0.15	0.15	0.15	0.15	0.23	0.23	0.23
Minimum line current		A	0.2	0.2	0.2	0.2	0.2	0.3	0.3	0.3
Maximum fuse current		A	6	6	6	6	6	6	6	6
Sound pressure level(H/M/L)		dB(A)	33/30/25	33/30/25	36/31/25	36/33/28	39/37/35	43/41/39	43/41/39	43/41/39
Power supply			220-240V 1 phase ~50Hz/208-230V 1 phase ~60Hz							
Piping interface	Liquid pipe	mm	Φ6.35	Φ6.35	Φ6.35	Φ6.35	Φ6.35	Φ6.35	Φ6.35	Φ9.52
	Gas pipe	mm	Φ9.52	Φ9.52	Φ9.52	Φ9.52	Φ12.7	Φ12.7	Φ12.7	Φ15.9
Drain pipe	External diameter ×thickness	mm	Φ25×2.5	Φ25×2.5	Φ25×2.5	Φ25×2.5	Φ25×2.5	Φ25×2.5	Φ25×2.5	Φ25×2.5
Main body dimensions	W×D×H	mm	570×570×265	570×570×265	570×570×265	570×570×265	570×570×265	570×570×265	570×570×265	570×570×265
Panel dimensions	W×D×H	mm	620×620×47.5	620×620×47.5	620×620×47.5	620×620×47.5	620×620×47.5	620×620×47.5	620×620×47.5	620×620×47.5
Net weight	Main body	kg	17.5	17.5	17.5	17.5	17.5	17.5	17.5	17.5
	Panel	kg	3	3	3	3	3	3	3	3

Notes:

① Rated cooling capacity test conditions: indoor 27°C DB/19°C WB, outdoor 35°C DB; connection pipe length: 5 m, without height drop between units.

② Rated heating capacity test conditions: indoor 20°C DB, outdoor 7°C DB/6 °C WB; connection pipe length: 5 m, without height drop between units.

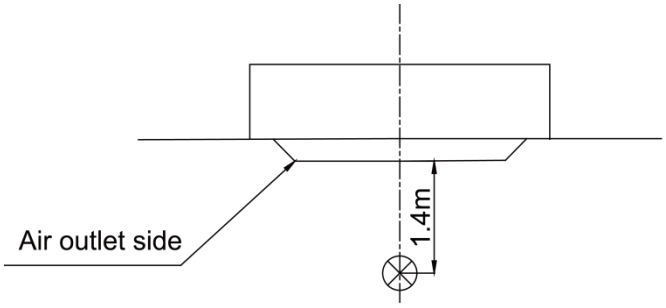

Transandient meter of sound level meter

3.7 2-way Cassette Type

Model		GMV-ND28TS/A-T	GMV-ND36TS/A-T	GMV-ND45TS/A-T	GMV-ND50TS/A-T	GMV-ND56TS/A-T	GMV-ND63TS/A-T	GMV-ND71TS/A-T
Cooling capacity	kW	2.8	3.6	4.5	5.0	5.6	6.3	7.1
Heating capacity	kW	3.2	4.0	5.0	5.6	6.3	7.1	8.0
Air volume(H/M/L)	m³/h	830/660/580	830/660/580	830/660/580	830/660/580	1100/900/750	1100/900/750	1100/900/750
Cooling power input	W	55	55	55	55	103	103	103
Cooling current input	A	0.4	0.4	0.4	0.4	0.7	0.7	0.7

Model			GMV-ND 28TS/A-T	GMV-ND 36TS/A-T	GMV-ND 45TS/A-T	GMV-ND 50TS/A-T	GMV-ND 56TS/A-T	GMV-ND 63TS/A-T	GMV-ND 71TS/A-T
Heating power input		W	55	55	55	55	103	103	103
Heating current input		A	0.4	0.4	0.4	0.4	0.7	0.7	0.7
Minimum line current		A	0.5	0.5	0.5	0.5	0.9	0.9	0.9
Maximum fuse current		A	6	6	6	6	6	6	6
Sound pressure level		dB(A)	35/32/29	35/32/29	35/32/29	35/32/29	39/36/33	39/36/33	39/36/33
Power supply			220-240V 1 phase ~50Hz/208-230V 1 phase ~60Hz						
Piping interface	Liquid pipe	mm	Φ6.35	Φ6.35	Φ6.35	Φ6.35	Φ9.52	Φ9.52	Φ9.52
	Gas pipe	mm	Φ9.52	Φ12.7	Φ12.7	Φ12.7	Φ15.9	Φ15.9	Φ15.9
Drain pipe	External diameter × Thickness	mm	Φ25×2.5	Φ25×2.5	Φ25×2.5	Φ25×2.5	Φ25×2.5	Φ25×2.5	Φ25×2.5
Main body dimensions	W×D×H	mm	1200×520 ×315	1200×520 ×315	1200×520 ×315	1200×520 ×315	1200×520 ×315	1200×520 ×315	1200×520 ×315
Panel dimensions	W×D×H	mm	1416×630 ×33	1416×630 ×33	1416×630 ×33	1416×630 ×33	1416×630 ×33	1416×630 ×33	1416×630 ×33
Net weight	Main body	kg	43.0	43.0	43.0	43.0	46.0	46.0	46.0
	Panel	kg	7.0	7.0	7.0	7.0	7.0	7.0	7.0

Model			GMV-ND 28TS/B-T	GMV-ND3 6TS/ B -T	GMV-ND 45TS/B-T	GMV-ND 50TS/B-T	GMV-ND 56TS/B-T	GMV-ND 63TS/B-T	GMV-ND 71TS/B-T	GMV-ND 80TS/B-T
Cooling capacity		kW	2.8	3.6	4.5	5.0	5.6	6.3	7.1	8.0
Heating capacity		kW	3.2	4.0	5.0	5.6	6.3	7.1	8.0	9.0
Air volume(H/M/L)		m³/h	671/616 /513	671/616 /513	715/616 /513	715/616 /513	764/709 /676	764/709 /676	816/745 /660	816/745 /660
Cooling power input		W	20	20	30	30	30	30	55	55
Cooling current input		A	0.25	0.25	0.30	0.30	0.30	0.30	0.49	0.49
Heating power input		W	20	20	30	30	30	30	55	55
Heating current input		A	0.25	0.25	0.30	0.30	0.30	0.30	0.49	0.49
Minimum line current		A	0.25	0.25	0.30	0.30	0.30	0.30	0.49	0.49
Maximum fuse current		A	6	6	6	6	6	6	6	6
Sound pressure level		dB(A)	33/31/28	33/31/28	35/31/28	35/31/28	37/35/32	37/35/32	39/37/34	39/37/34
Power supply			220-240V 1 phase ~50Hz/208-230V 1 phase ~60Hz							
Piping interface	Liquid pipe	mm	Φ6.35	Φ6.35	Φ6.35	Φ6.35	Φ9.52	Φ9.52	Φ9.52	Φ9.52
	Gas pipe	mm	Φ9.52	Φ12.7	Φ12.7	Φ12.7	Φ15.9	Φ15.9	Φ15.9	Φ15.9
Drain pipe	External diameter × Thickness	mm	Φ25×2.5	Φ25×2.5	Φ25×2.5	Φ25×2.5	Φ25×2.5	Φ25×2.5	Φ25×2.5	Φ25×2.5
Main body dimensions	W×D×H	mm	790×630× 280	790×630× 280	790×630× 280	790×630× 280	790×630× 280	790×630× 280	790×630× 280	790×630× 280
Panel dimensions	W×D×H	mm	1100×710 ×28	1100×710 ×28	1100×710 ×28	1100×710 ×28	1100×710 ×28	1100×710 ×28	1100×710 ×28	1100×710 ×28
Net weight	Main body	kg	25.5	25.5	25.5	25.5	26.0	26.0	26.0	26.0
	Panel	kg	6.0	6.0	6.0	6.0	6.0	6.0	6.0	6.0

Notes:

① Rated cooling capacity test conditions: indoor 27°C DB/19°C WB, outdoor 35°C DB; connection pipe length: 5 m, without height drop between units.

② Rated heating capacity test conditions: indoor 20°C DB, outdoor 7°C DB/6 °C WB; connection pipe length: 5 m, without height drop between units.

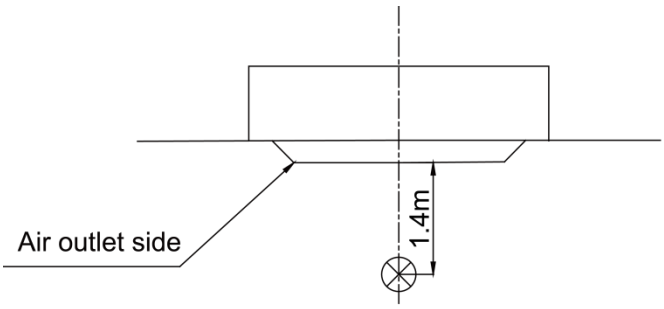

Transandient meter of sound level meter

3.8 1-way Cassette Type

Model			GMV-ND22 TD/A-T	GMV-ND28 TD/A-T	GMV-ND36 TD/A-T	GMV-ND45 TD/A-T	GMV-ND50 TD/A-T	GMV-ND56 TD/A-T
Cooling capacity		kW	2.2	2.8	3.6	4.5	5.0	5.6
Heating capacity		kW	2.5	3.2	4.0	5.0	5.6	6.3
Air volume		m³/h	600	600	600	830	830	890
Cooling power input		W	30	30	30	45	45	45
Cooling current input		A	0.2	0.2	0.2	0.3	0.3	0.3
Heating power input		W	30	30	30	45	45	45
Heating current input		A	0.2	0.2	0.2	0.3	0.3	0.3
Minimum line current		A	0.25	0.25	0.25	0.38	0.38	0.38
Maximum fuse current		A	6	6	6	6	6	6
Sound pressure level		dB(A)	36	36	36	40	40	41
Power supply			220-240V 1 phase ~50Hz/208-230V 1 phase ~60Hz					
Piping interface	Liquid pipe	mm	Φ6.35	Φ6.35	Φ6.35	Φ6.35	Φ6.35	Φ9.52
	Gas pipe	mm	Φ9.52	Φ9.52	Φ12.7	Φ12.7	Φ12.7	Φ15.9
Drain pipe	External diameter ×thickness	mm	Φ25×2.5	Φ25×2.5	Φ25×2.5	Φ25×2.5	Φ25×2.5	Φ25×2.5
Main body dimensions	W×D×H	mm	987×385 ×178	987×385 ×178	987×385 ×178	987×385 ×178	987×385 ×178	987×385 ×178
Panel dimensions	W×D×H	mm	1200×460 ×55	1200×460 ×55	1200×460 ×55	1200×460 ×55	1200×460 ×55	1200×460 ×55
Net weight	Main body	kg	20	20	20	21	21	21
	Panel	kg	4.2	4.2	4.2	4.2	4.2	4.2

Model			GMV-ND63TD/B-T	GMV-ND71TD/B-T	GMV-ND80TD/B-T
Cooling capacity		kW	6.3	7.1	8.0
Heating capacity		kW	7.1	8.0	9.0
Air volume		m³/h	880	1000	1000
Cooling power input		W	57	83	83
Cooling current input		A	0.55	0.86	0.86
Heating power input		W	57	83	83
Heating current input		A	0.55	0.86	0.86
Minimum line current		A	0.55	0.86	0.86
Maximum fuse current		A	6	6	6
Sound pressure level		dB(A)	42	44	44
Power supply			220-240V 1 phase ~50Hz/208-230V 1 phase ~60Hz		
Piping interface	Liquid pipe	mm	Φ9.52	Φ9.52	Φ9.52
	Gas pipe	mm	Φ15.9	Φ15.9	Φ15.9

Model			GMV-ND63TD/B-T	GMV-ND71TD/B-T	GMV-ND80TD/B-T
Drain pipe	External diameter ×thickness	mm	Φ25×2.5	Φ25×2.5	Φ25×2.5
Main body dimensions	W×D×H	mm	1200×470×200	1200×470×200	1200×470×200
Panel dimensions	W×D×H	mm	1350×555×64	1350×555×64	1350×555×64
Net weight	Main body	kg	26	26	26
	Panel	kg	7.8	7.8	7.8

Notes:

① Rated cooling capacity test conditions: indoor 27°C DB/19°C WB, outdoor 35°C DB; connection pipe length: 5 m, without height drop between units.

② Rated heating capacity test conditions: indoor 20°C DB, outdoor 7°C DB/6 °C WB; connection pipe length: 5 m, without height drop between units.

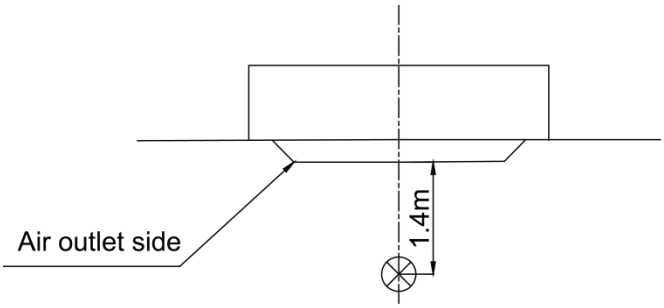

Transandient meter of sound level meter

3.9 Floor Ceiling Type

Model			GMV-ND28 ZD/A-T	GMV-ND36 ZD/A-T	GMV-ND50 ZD/A-T	GMV-ND56 ZD/A-T	GMV-ND63 ZD/A-T	GMV-ND71 ZD/A-T
Cooling capacity		kW	2.8	3.6	5.0	5.6	6.3	7.1
Heating capacity		kW	3.2	4.0	5.6	6.3	7.1	80
Air volume		m³/h	650	650	950	950	1400	1400
Cooling power input		W	40	40	50	50	75	75
Cooling current input		A	0.3	0.3	0.4	0.4	0.6	0.6
Heating power input		W	40	40	50	50	75	75
Heating current input		A	0.3	0.3	0.4	0.4	0.6	0.6
Minimum line current		A	0.32	0.32	0.43	0.43	0.64	0.64
Maximum fuse current		A	6	6	6	6	6	6
Sound pressure level		dB(A)	36	36	42	42	44	44
Power supply			220-240V 1 phase ~50Hz/208-230V 1 phase ~60Hz					
Piping interface	Liquid pipe	mm	Φ6.35	Φ6.35	Φ6.35	Φ9.52	Φ9.52	Φ9.52
	Gas pipe	mm	Φ9.52	Φ12.7	Φ12.7	Φ15.9	Φ15.9	Φ15.9
Drain pipe	External diameter ×thickness	mm	Φ17×1.75	Φ17×1.75	Φ17×1.75	Φ17×1.75	Φ17×1.75	Φ17×1.75
Outline Dimensions	W×D×H	mm	1220×700 ×225	1220×700 ×225	1220×700 ×225	1220×700 ×225	1420×700 ×245	1420×700 ×245
Net weight		kg	40	40	40	40	50	50

Model			GMV-ND90 ZD/A-T	GMV-ND112 ZD/A-T	GMV-ND125 ZD/A-T	GMV-ND140 ZD/A-T	GMV-ND160 ZD/A-T
Cooling capacity		kW	9.0	11.2	12.5	14.0	16.0
Heating capacity		kW	10.0	12.5	14.0	16.0	18.0
Air volume		m³/h	1600	2000	2000	2000	2300
Cooling power input		W	140	160	160	160	200
Cooling current input		A	1.1	1.4	1.4	1.4	1.9
Heating power input		W	140	160	160	160	200
Heating current input		A	1.1	1.4	1.4	1.4	1.9
Minimum line current		A	1.17	1.5	1.5	1.5	2
Maximum fuse current		A	6	6	6	6	6
Sound pressure level		dB(A)	50	51	52	52	52
Power supply			220-240V 1 phase ~50Hz/208-230V 1 phase ~60Hz				
Piping interface	Liquid pipe	mm	Φ9.52	Φ9.52	Φ9.52	Φ9.52	Φ9.52
	Gas pipe	mm	Φ15.9	Φ15.9	Φ15.9	Φ15.9	Φ19.05
Drain pipe	External diameter ×thickness	mm	Φ17×1.75	Φ17×1.75	Φ17×1.75	Φ17×1.75	Φ17×1.75
Outline Dimensions	W×D×H	mm	1420×700×245	1700×700×245	1700×700×245	1700×700×245	1700×700×245
Net weight		kg	50	60	60	60	60

Notes:

① Rated Cooling capacity test conditions: indoor 27°C DB/19°C WB, outdoor 35°C DB; connection pipe length: 5 m, without height drop between units.

② Rated heating capacity test conditions: indoor 20°C DB, outdoor 7°C DB/6 °C WB; connection pipe length: 5 m, without height drop between units.

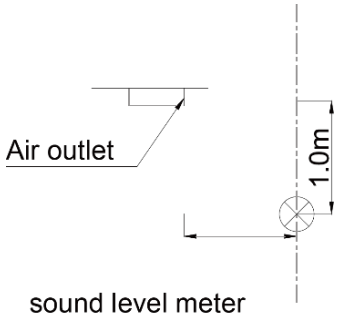

Model			GMV-ND28Z D/B-T	GMV-ND36Z D/B-T	GMV-ND50Z D/B-T	GMV-ND56Z D/B-T	GMV-ND63Z D/B-T	GMV-ND71Z D/B-T
Cooling capacity		kW	2.8	3.6	5.0	5.6	6.3	7.1
Heating capacity		kW	3.2	4.0	5.6	6.3	7.1	8.0
Air volume		m³/h	600	600	750	750	1350	1350
Cooling power input		W	35	35	55	55	80	80
Cooling current input		A	0.2	0.2	0.3	0.3	0.4	0.4
Heating power input		W	35	35	55	55	80	80
Heating current input		A	0.2	0.2	0.3	0.3	0.4	0.4
Minimum line current		A	0.2	0.2	0.3	0.3	0.4	0.4
Maximum fuse current		A	6	6	6	6	6	6
Sound pressure level		dB(A)	36	36	42	42	44	44
Power supply			220-240V 1 phase ~50Hz/208-230V 1 phase ~60Hz					
Piping interface	Liquid pipe	mm	Φ6.35	Φ6.35	Φ6.35	Φ9.52	Φ9.52	Φ9.52
	Gas pipe	mm	Φ9.52	Φ12.7	Φ12.7	Φ15.9	Φ15.9	Φ15.9

Model			GMV-ND28Z D/B-T	GMV-ND36Z D/B-T	GMV-ND50Z D/B-T	GMV-ND56Z D/B-T	GMV-ND63Z D/B-T	GMV-ND71Z D/B-T
Drain pipe	External diameter × thickness	mm	Φ17×1.75	Φ17×1.75	Φ17×1.75	Φ17×1.75	Φ17×1.75	Φ17×1.75
Outline Dimensions	W×D×H	mm	870×665 ×235	870×665 ×235	870×665 ×235	870×665 ×235	1200×665 ×235	1200×665 ×235
Net weight		kg	24	24	25	25	32	32

Model			GMV-ND90 ZD/B-T	GMV-ND112Z D/B-T	GMV-ND125Z D/B-T	GMV-ND140Z D/B-T	GMV-ND160Z D/B-T
Cooling capacity		kW	9.0	11.2	12.5	14.0	16.0
Heating capacity		kW	10.0	12.5	14.0	16.0	18.0
Air volume		m^3/h	1550	1800	1800	2000	2150
Cooling power input		W	120	120	120	150	175
Cooling current input		A	0.7	0.7	0.7	0.8	0.9
Heating power input		W	120	120	120	150	175
Heating current input		A	0.7	0.7	0.7	0.8	0.9
Minimum line current		A	0.7	0.7	0.7	0.8	0.9
Maximum fuse current		A	6	6	6	6	6
Sound pressure level		dB(A)	47	47	47	49	52
Power supply			220-240V 1 phase ~50Hz/208-230V 1 phase ~60Hz				
Piping interface	Liquid pipe	mm	Φ9.52	Φ9.52	Φ9.52	Φ9.52	Φ9.52
	Gas pipe	mm	Φ15.9	Φ15.9	Φ15.9	Φ15.9	Φ19.05
Drain pipe	External diameter × thickness	mm	Φ17×1.75	Φ17×1.75	Φ17×1.75	Φ17×1.75	Φ17×1.75
Dimensions	W×D×H	mm	1200×665×235	1570×665×235	1570×665×235	1570×665×235	1570×665×235
Net weight		kg	33	41	41	43	43

Notes:

① Rated Cooling capacity test conditions: indoor 27°C DB/19°C WB, outdoor 35°C DB; connection pipe length: 5 m, without height drop between units.

② Rated heating capacity test conditions: indoor 20°C DB, outdoor 7°C DB/6 °C WB; connection pipe length: 5 m, without height drop between units.

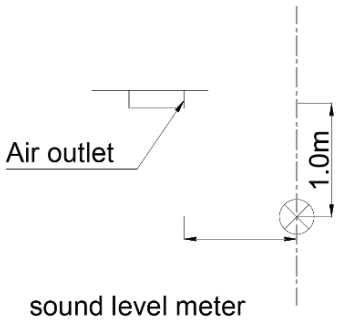

3.10 Fresh air Processing Unit

AC Inverter Fresh Air Processing Indoor

Model		GMV-NX140 P/A(X1.2)-K	GMV-NX224 P/A(X2.0) -M	GMV-NX280 P/A(X2.5) -M	GMV-NX280 P/A(X3.0) -M	GMV-NX450 P/A(X4.0) -M
Cooling capacity	kW	14	22.4	28	28	45
Heating capacity	kW	10	16	20	20	32
Air volume	m^3/h	1200	2000	2500	3000	4000

Model			GMV-NX140 P/A(X1.2)-K	GMV-NX224 P/A(X2.0) -M	GMV-NX280 P/A(X2.5) -M	GMV-NX280 P/A(X3.0) -M	GMV-NX450 P/A(X4.0) -M
Cooling power input		W	360	740	760	1060	1240
Static pressure (Pa)		Standard	150	200	200	200	200
		Optional	200	300	300	300	300
Cooling current input		A	1.65	2.10	2.40	2.47	3.40
Heating power input		W	360	740	760	1060	1240
Heating current input		A	1.65	2.10	2.40	2.47	3.40
Minimum line current		A	2.1	2.6	3.0	3.1	4.3
Maximum fuse current		A	3.7	4.7	5.4	5.5	7.6
Sound pressure level		dB(A)	42	47	48	51	58
Power supply			220-240V 1phase~50Hz	380-415V 3N~50Hz	380-415V 3N~50Hz	380-415V 3N~50Hz	380-415V 3N~50Hz
Piping interface	Liquid pipe	mm	Φ9.52	Φ9.52	Φ9.52	Φ9.52	Φ12.7
	Gas pipe	mm	Φ15.9	Φ19.05	Φ22.2	Φ22.2	Φ28.6
Drain pipe	External diameter ×thickness	mm	Φ30×1.5	Φ30×1.5	Φ30×1.5	Φ30×1.5	Φ33×3.0
Outline Dimensions	W×D×H	mm	1463×756 ×300	1500×1000 ×500	1500×1000 ×500	1500×1000 ×500	1700×1100 ×650
Net weight		kg	63.5	130	134	134	208

Notes:

① Rated cooling capacity test conditions: fresh air inlet 35°C DB/28°C WB; connection pipe length: 5 m, without height drop between units; the default air outlet temperature of the unit is 18°C.

② Rated heating capacity test conditions: fresh air inlet 7°C DB/6°C WB; connection pipe length: 5 m, without height drop between units; the default air outlet temperature of the unit is 22°C.

DC Inverter Fresh Air Processing Indoor

Model			GMV-NDX125P/A-T	GMV-NDX140P/A-T	GMV-NDX224P/A-T
Cooling capacity		kW	12.5	14.0	22.4
Heating capacity		kW*1	8.5	10.0	16.0
		kW*2	10.5	12.0	20.0
Air volume		m³/h	1200/1000~2000	1200/1000~2000	2000/1500~3000
Static pressure (Pa)		Standard	150	150	200
		Optional	50~200	50~200	50~300
Rated power input		W	350	350	760
Rated current input		A	2.0	2.0	4.3
Cooling power input		W	200	200	400
Cooling current input		A	1.5	1.5	2.5
Heating power input		W	200	200	400
Heating current input		A	1.5	1.5	2.5
Maximum fuse current		A	6	6	10
Sound pressure level		dB(A)	40~50	40~50	45~54
Power supply			220-240V 1 phase ~50Hz 208-230V 1 phase ~60Hz		
Piping diameter	Liquid pie	mm	Φ9.52	Φ9.52	Φ9.52
	Gas pipe	mm	Φ15.9	Φ15.9	Φ19.05
Drain pipe	Outer diameter ×Wall thickness	mm	Φ25×2.5	Φ25×2.5	Φ25×2
Outline Dimensions	W×D×H	mm	1400×700×300	1400×700×300	1483×791×385
Net weight		kg	54	54	82

Model			GMV-NDX250P/A-T	GMV-NDX280P/A-T
Cooling capacity		kW	25.0	28.0
Heating capacity		kW*1	18.0	20.0
		kW*2	20.0	22.0
Air volume		m³/h	2500/2000~3500	2500/2000~3500
Static pressure (Pa)		Standard	200	200
		Optional	50~300	50~300
Rated power input		W	860	860
Rated current input		A	4.9	4.9
Cooling power input		W	520	520
Cooling current input		A	3.1	3.1
Heating power input		W	520	520
Heating current input		A	3.1	3.1
Maximum fuse current		A	10	10
Sound pressure level		dB(A)	47~54	47~54
Power supply			220-240V 1 phase ~50Hz 208-230V 1 phase ~60Hz	
Piping diameter	Liquid pie	mm	Φ9.52	Φ9.52
	Gas pipe	mm	Φ22.2	Φ22.2
Drain pipe	Outer diameter×Wall thickness	mm	Φ25×2	Φ25×2
Outline Dimensions	W×D×H	mm	1483×791×385	1483×791×385
Net weight		kg	82	82

Notes:

① Rated cooling capacity test conditions: indoor 35°C DB/28°C WB, outdoor 35°C DB; connection pipe length: 7.5m, without height drop between units. The default air outlet temperature of the unit is 18°C.

② Rated heating capacity test conditions: *1: indoor 7°C DB, outdoor 7°C DB/6 °C WB, *2: indoor 0°C DB, outdoor 0°C DB/RH80%; connection pipe length: 7.5m, without height drop between units. The default air outlet temperature of the unit is 22°C.

③ In the column of “Air Volume”: The figure before “/” indicates the default air Volume of unit before delivery, and the figures after indicate the adjustable air Volume range of unit.

④ The noise value marked in the nameplate is tested under rated condition. For the units of GMV-NDX125P/A-T and GMV-NDX140P/A-T, which are defaulted as speed 08 under static pressure of 150Pa. And others are defaulted as speed 08 under static pressure of 200Pa.The noise in the highest speed may increase by about 3 dB(A) on this value. The noise in the lowest speed may decrease by about 5 dB(A) on this value. The recorded noise value of the sample unit is tested in semi-anechoic room. Under actual installation, the noise value is usually higher than the recorded value of the sample due to the influence of ambient noise and reflected sound.

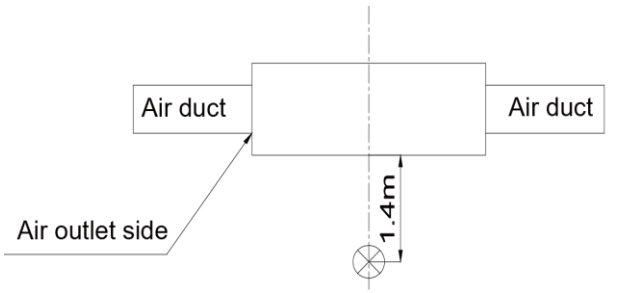

Transandient meter of sound level meter

3.11 Slim Duct Type

Model			GMV-ND22 PL/B-T	GMV-ND25 PL/B-T	GMV-ND28 PL/B-T	GMV-ND32 PL/B-T	GMV-ND36 PL/B-T	GMV-ND40 PL/B-T
Cooling capacity		kW	2.2	2.5	2.8	3.2	3.6	4.0
Heating capacity		kW	2.5	2.8	3.2	3.6	4.0	4.5
Air volume		m³/h	450	450	450	550	550	750
Unit external static pressure		Pa	0/0~15	0/0~15	0/0~15	0/0~15	0/0~15	0/0~15
Cooling power input		W	25	25	25	30	30	35
Cooling current input		A	0.2	0.2	0.2	0.3	0.3	0.3
Heating power input		W	25	25	25	30	30	35
Heating current input		A	0.2	0.2	0.2	0.3	0.3	0.3
*Minimum line current		A	0.25	0.25	0.25	0.38	0.38	0.38
*Maximum fuse current		A	6	6	6	6	6	6
Sound pressure level		dB(A)	30	30	30	31	31	33
Power supply			220-240V 1 phase ~50Hz/208-230V 1 phase ~60Hz					
Piping interface	Liquid pipe	mm	Φ6.35	Φ6.35	Φ6.35	Φ6.35	Φ6.35	Φ6.35
	Gas pipe	mm	Φ9.52	Φ9.52	Φ9.52	Φ12.7	Φ12.7	Φ12.7
Drain pipe	External diameter × thickness	mm	Φ25×2.5	Φ25×2.5	Φ25×2.5	Φ25×2.5	Φ25×2.5	Φ25×2.5
Dimensions	W×D×H	mm	710×450 ×200	710×450 ×200	710×450 ×200	710×450 ×200	710×450 ×200	1010×450 ×200
Net weight	Main body	kg	18.5	18.5	18.5	19.5	19.5	23.5

Model			GMV-ND45PL /B-T	GMV-ND50PL /B-T	GMV-ND56PL /B-T	GMV-ND63PL/ B-T	GMV-ND72PL /B-T
Cooling capacity		kW	4.5	5.0	5.6	6.3	7.2
Heating capacity		kW	5.0	5.6	6.3	7.0	8.0
Unit external static pressure		Pa	0/0~15	0/0~15	0/0~15	0/0~15	0/0~15
Air volume		m³/h	750	750	850	850	1100
Cooling power input		W	35	35	45	45	50
Cooling current input		A	0.3	0.3	0.3	0.3	0.5
Heating power input		W	35	35	45	45	50
Heating current input		A	0.3	0.3	0.3	0.3	0.5
*Minimum line current		A	0.38	0.38	0.38	0.38	0.63
*Maximum fuse current		A	6	6	6	6	6
Sound pressure level		dB(A)	33	33	35	35	37
Power supply			220-240V 1 phase ~50Hz/208-230V 1 phase ~60Hz				
Piping interface	Liquid pipe	mm	Φ6.35	Φ6.35	Φ9.52	Φ9.52	Φ9.52
	Gas pipe	mm	Φ12.7	Φ12.7	Φ15.9	Φ15.9	Φ15.9

Model			GMV-ND45PL /B-T	GMV-ND50PL /B-T	GMV-ND56PL /B-T	GMV-ND63PL/ B-T	GMV-ND72PL /B-T
Drain pipe	External diameter × thickness	mm	Φ25×2.5	Φ25×2.5	Φ25×2.5	Φ25×2.5	Φ25×2.5
Dimensions	W×D×H	mm	1010×450×200	1010×450×200	1010×450×200	1010×450×200	1310×450×200
Net weight	Main body	kg	23.5	23.5	24.5	24.5	30.5

Model			GMV-ND22 PLS/B1-T	GMV-ND25 PLS/B1-T	GMV-ND28 PLS/B1-T	GMV-ND32 PLS/B1-T	GMV-ND36 PLS/B1-T	GMV-ND40 PLS/B1-T
Cooling capacity		kW	2.2	2.5	2.8	3.2	3.6	4.0
Heating capacity		kW	2.5	2.8	3.2	3.6	4.0	4.5
Air volume		m^3/h	610	610	610	620	650	810
Unit external static pressure		Pa	10/30	10/30	10/30	10/30	10/30	10/30
Cooling power input		W	65	65	65	65	65	65
Cooling current input		A	0.30	0.30	0.30	0.30	0.30	0.30
Heating power input		W	65	65	65	65	65	65
Heating current input		A	0.30	0.30	0.30	0.30	0.30	0.30
*Minimum line current		A	0.63	0.63	0.63	0.63	0.63	0.63
*Maximum fuse current		A	1.1	1.1	1.1	1.1	1.1	1.1
Sound pressure level		dB(A)	38	38	38	38	38	37
Power supply			220-240V 1 phase ~50Hz/208-230V 1 phase ~60Hz					
Piping interface	Liquid pipe	mm	Φ6.35	Φ6.35	Φ6.35	Φ6.35	Φ6.35	Φ6.35
	Gas pipe	mm	Φ9.52	Φ9.52	Φ9.52	Φ12.7	Φ12.7	Φ12.7
Drain pipe	External diameter ×thickness	mm	Φ25×2.5	Φ25×2.5	Φ25×2.5	Φ25×2.5	Φ25×2.5	Φ25×2.5
Dimensions	W×D×H	mm	710×450 ×200	710×450 ×200	710×450 ×200	710×450 ×200	710×450 ×200	1010×450 ×200
Net weight	Main body	kg	19.0	19.0	19.0	20.0	20.0	24.0

Model			GMV-ND45PL S/B1-T	GMV-ND50PL S/B1-T	GMV-ND56PL S/B1-T	GMV-ND63PL S/B1-T	GMV-ND71PL S/B1-T
Cooling capacity		kW	4.5	5.0	5.6	6.3	7.1
Heating capacity		kW	5.0	5.6	6.3	7.0	8.0
Air volume		m^3/h	810	810	810	810	1210
Unit external static pressure		Pa	10/30	10/30	10/30	10/30	10/30
Cooling power input		W	65	65	65	65	70
Cooling current input		A	0.30	0.30	0.30	0.30	0.32
Heating power input		W	65	65	65	65	70
Heating current input		A	0.30	0.30	0.30	0.30	0.32
*Minimum line current		A	0.63	0.63	0.63	0.63	0.63
*Maximum fuse current		A	1.1	1.1	1.1	1.1	1.1
Sound pressure level		dB(A)	37	37	37	37	39
Power supply			220-240V 1 phase ~50Hz/208-230V 1 phase ~60Hz				
Piping interface	Liquid pipe	mm	Φ6.35	Φ6.35	Φ9.52	Φ9.52	Φ9.52
	Gas pipe	mm	Φ12.7	Φ12.7	Φ15.9	Φ15.9	Φ15.9
Drain pipe	External diameter ×thickness	mm	Φ25×2.5	Φ25×2.5	Φ25×2.5	Φ25×2.5	Φ25×2.5
Dimensions	W×D×H	mm	1010×450× 200	1010×450× 200	1010×450× 200	1010×450× 200	1310×450× 200
Net weight	Main body	kg	24.0	25.0	25.0	25.0	30.5

Notes:

① Rated cooling capacity test conditions: indoor 27°C DB/19°C WB, outdoor 35°C DB; connection pipe length: 5 m, without height drop between units.

② Rated heating capacity test conditions: indoor 20°C DB, outdoor 7°C DB/6 °C WB; connection pipe length: 5 m, without height drop between units.

③ In the column of "Unit external static pressure": The figure before "/" indicates the default external static pressure of unit before delivery, and the figures after indicate the adjustable static pressure range of unit.

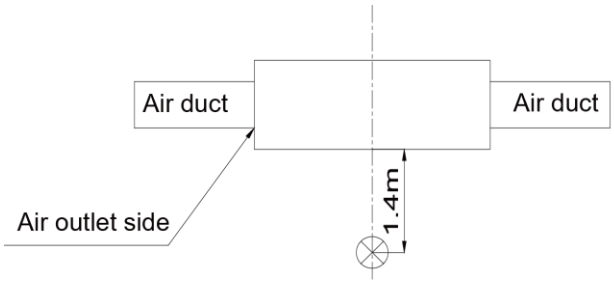

Transandient meter of sound level meter

3.12 Air Handler Type Indoor Unit

Model			GMV-NR71A/A-D	GMV-NR90A/A-D	GMV-NR100A/A-D	GMV-NR112A/A-D	GMV-NR140A/A-D
Cooling capacity		kW	7.1	9.0	10.0	11.2	14.0
Heating capacity		kW	8.0	10.0	11.0	12.5	15.0
Air volume		m³/h	1600	1700	1900	2300	2500
Cooling power input		W	215	270	370	430	550
Cooling current input		A	1.10	1.35	2.00	2.00	2.50
Heating power input		W	215	270	370	430	550
Heating current input		A	1.10	1.35	2.00	2.00	2.50
Minimum line current		A	0.4	0.4	0.4	0.5	0.5
Maximum fuse current		A	6	6	6	6	6
Sound pressure level		dB(A)	50	51	52	52	55
Power supply			208-230V 1 phase ~60Hz				
Piping interface	Liquid pipe	mm	Φ9.52	Φ9.52	Φ9.52	Φ9.52	Φ9.52
	Gas pipe	mm	Φ15.9	Φ15.9	Φ15.9	Φ15.9	Φ15.9
Drain pipe		mm	G1	G1	G1	G1	G1
Main body dimensions	W×D×H	mm	460×540×1105	460×540×1105	540×540×1224	540×540×1224	630×540×1224
Panel dimensions	W×D×H	mm	517×620×1170	517×620×1170	597×620×1289	597×620×1289	687×621×1295
Net weight	Main body	kg	54	57	66	68	78

Notes:

① Rated cooling capacity test conditions: indoor 27°C DB/19°C WB, outdoor 35°C DB; connection pipe length: 5 m, without height drop between units.

② Rated heating capacity test conditions: indoor 20°C DB, outdoor 7°C DB/6 °C WB; connection pipe length: 5 m, without height drop between units.

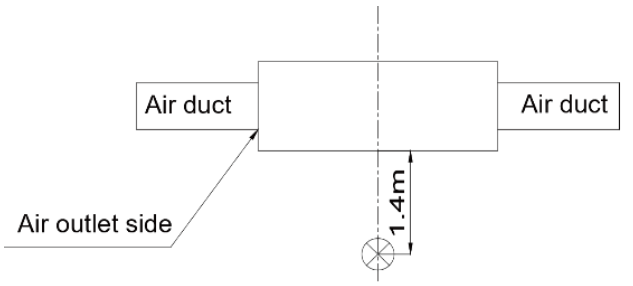

Transandient meter of sound level meter

3.13 Console Type Indoor Unit

Model			GMV-ND22C/A-T	GMV-ND28C/A-T	GMV-ND36C/A-T	GMV-ND45C/A-T	GMV-ND50C/A-T
Cooling capacity		kW	2.2	2.8	3.6	4.5	5.0
Heating capacity		kW	2.5	3.2	4.0	5.0	5.5
Air volume		m³/h	450	500	600	630	650
Cooling power input		W	15	15	20	40	40
Cooling current input		A	0.17	0.17	0.25	0.25	0.4
Heating power input		W	15	15	20	40	40
Heating current input		A	0.17	0.17	0.25	0.25	0.4
*Minimum line current		A	0.16	0.16	0.16	0.16	0.16
*Maximum fuse current		A	6	6	6	6	6
Sound pressure level		dB(A)	36	38	40	43	46
Power supply			220-240V 1 phase ~50Hz/208-230V 1 phase ~60Hz				
Piping interface	Liquid pipe	mm	6.35	6.35	6.35	6.35	6.35
	Gas pipe	mm	9.52	9.52	12.7	12.7	12.7
Drain pipe	External diameter × thickness	mm	Φ17.2×1.0	Φ17.2×1.0	Φ17.2×1.0	Φ17.2×1.0	Φ17.2×1.0
Dimensions	W×D×H	mm	700×215×600	700×215×600	700×215×600	700×215×600	700×215×600
Net weight		kg	16	16	16	16	16

Notes:

① Rated Cooling capacity test conditions: indoor 27°C DB/19°C WB, outdoor 35°C DB; connection pipe length: 5 m, without height drop between units.

② Rated heating capacity test conditions: indoor 20°C DB, outdoor 7°C DB/6 °C WB; connection pipe length: 5 m, without height drop between units.

Floor type	Wall Mounted type
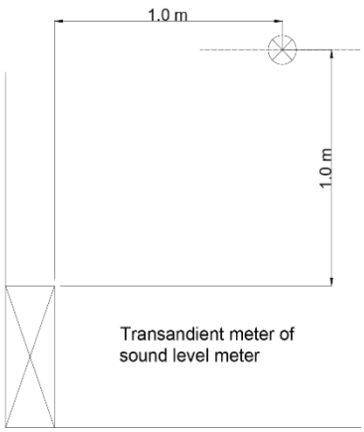	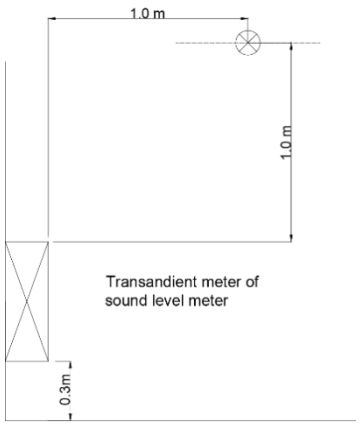

3.14 Wall Mounted Type Indoor Unit

Model			GMV-N22G/A3A-K	GMV-N28G/A3A-K	GMV-N36G/A3A-K	GMV-N45G/A3A-K	GMV-N50G/A3A-K
Cooling capacity		kW	2.2	2.8	3.6	4.5	5.0
Heating capacity		kW	2.5	3.2	4.0	5.0	5.8
Air volume		m³/h	500	500	630	630	630
Cooling power input		W	50	50	60	60	60
Cooling current input		A	0.2	0.2	0.31	0.31	0.31
Heating power input		W	50	50	60	60	60
Heating current input		A	0.2	0.2	0.31	0.31	0.31
*Minimum line current		A	0.25	0.25	0.38	0.38	0.38
*Maximum fuse current		A	6	6	6	6	6
Sound pressure level		dB(A)	38	38	44	44	44
Power supply			220-240V 1 phase ~50Hz				
Piping interface	Liquid pipe	mm	Φ6.35	Φ6.35	Φ6.35	Φ6.35	Φ6.35
	Gas pipe	mm	Φ9.52	Φ9.52	Φ12.7	Φ12.7	Φ12.7
Drain pipe	External diameter × thickness	mm	Φ20×1.5	Φ20×1.5	Φ20×1.5	Φ20×1.5	Φ20×1.5
Dimensions	W×D×H	mm	843×180×275	843×180×275	940×200×298	940×200×298	940×200×298
Net weight		kg	10	10	12.5	12.5	12.5

Model			GMV-N56G/A3A-K	GMV-N63G/A3A-K	GMV-N71G/A3A-K
Cooling capacity		kW	5.6	6.3	7.1
Heating capacity		kW	6.3	7.0	7.5
Air volume		m³/h	750	750	750
Cooling power input		W	70	70	70
Cooling current input		A	0.31	0.31	0.31
Heating power input		W	70	70	70
Heating current input		A	0.31	0.31	0.31
*Minimum line current		A	0.5	0.5	0.5
*Maximum fuse current		A	6	6	6
Sound pressure level		dB(A)	44	44	44
Power supply			220-240V 1 phase ~50Hz		
Piping interface	Liquid pipe	mm	Φ9.52	Φ9.52	Φ9.52
	Gas pipe	mm	Φ15.9	Φ15.9	Φ15.9
Drain pipe	External diameter× thickness	mm	Φ20×1.5	Φ20×1.5	Φ20×1.5
Dimensions	W×D×H	mm	1008×221×319	1008×221×319	1008×221×319
Net weight		kg	15	15	15

Model			GMV-N22G/B3A-K	GMV-N28G/B3A-K	GMV-N36G/B3A-K	GMV-N45G/B3A-K	GMV-N50G/B3A-K
Cooling capacity		kW	2.2	2.8	3.6	4.5	5.0
Heating capacity		kW	2.5	3.2	4.0	5.0	5.8
Air volume		m³/h	500	500	630	630	630
Cooling power input		W	50	50	60	60	60
Cooling current input		A	0.2	0.2	0.31	0.31	0.31
Heating power input		W	50	50	60	60	60
Heating current input		A	0.2	0.2	0.31	0.31	0.31
*Minimum line current		A	0.25	0.25	0.38	0.38	0.38
*Maximum fuse current		A	6	6	6	6	6
Sound pressure level		dB(A)	38	38	44	44	44
Power supply			220-240V 1 phase ~50Hz				
Piping interface	Liquid pipe	mm	Φ6.35	Φ6.35	Φ6.35	Φ6.35	Φ6.35
	Gas pipe	mm	Φ9.52	Φ9.52	Φ12.7	Φ12.7	Φ12.7
Drain pipe	External diameter × thickness	mm	Φ20×1.5	Φ20×1.5	Φ20×1.5	Φ20×1.5	Φ20×1.5
Dimensions	W×D×H	mm	843x180x275	843x180x275	940x200x298	940x200x298	940x200x298
Net weight		kg	10	10	12.5	12.5	12.5

Model			GMV-N56G/B3A-K	GMV-N63G/B3A-K	GMV-N71G/B3A-K
Cooling capacity		kW	5.6	6.3	7.1
Heating capacity		kW	6.3	7.0	7.5
Air volume		m³/h	750	750	750
Cooling power input		W	70	70	70
Cooling current input		A	0.31	0.31	0.31
Heating power input		W	70	70	70
Heating current input		A	0.31	0.31	0.31
*Minimum line current		A	0.5	0.5	0.5
*Maximum fuse current		A	6	6	6
Sound pressure level		dB(A)	44	44	44
Power supply			220-240V 1 phase ~50Hz		
Piping interface	Liquid pipe	mm	Φ9.52	Φ9.52	Φ9.52
	Gas pipe	mm	Φ15.9	Φ15.9	Φ15.9
Drain pipe	External diameter× thickness	mm	Φ20×1.5	Φ20×1.5	Φ20×1.5
Dimensions	W×D×H	mm	1008×221×319	1008×221×319	1008×221×319
Net weight		kg	15	15	15

Model			GMV-N22G/A2A-K	GMV-N28G/A2A-K	GMV-N36G/A2A-K	GMV-N45G/A2A-K	GMV-N50G/A2A-K
Cooling capacity		kW	2.2	2.8	3.6	4.5	5.0
Heating capacity		kW	2.5	3.2	4.0	5.0	5.8
Air volume		m³/h	500	500	630	630	630
Cooling power input		W	50	50	60	60	60
Cooling current input		A	0.2	0.2	0.31	0.31	0.31
Heating power input		W	50	50	60	60	60
Heating current input		A	0.2	0.2	0.31	0.31	0.31
*Minimum line current		A	0.25	0.25	0.38	0.38	0.38
*Maximum fuse current		A	6	6	6	6	6
Sound pressure level		dB(A)	38	38	44	44	44
Power supply			220-240V 1 phase ~50Hz				
Piping interface	Liquid pipe	mm	Φ6.35	Φ6.35	Φ6.35	Φ6.35	Φ6.35
	Gas pipe	mm	Φ9.52	Φ9.52	Φ12.7	Φ12.7	Φ12.7
Drain pipe	External diameter × thickness	mm	Φ20×1.5	Φ20×1.5	Φ20×1.5	Φ20×1.5	Φ20×1.5
Dimensions	W×D×H	mm	843×180×275	843×180×275	940×200×298	940×200×298	940×200×298
Net weight		kg	10	10	12.5	12.5	12.5

Model			GMV-N56G/A2A-K	GMV-N63G/A2A-K	GMV-N71G/A2A-K
Cooling capacity		kW	5.6	6.3	7.1
Heating capacity		kW	6.3	7.0	7.5
Air volume		m³/h	750	750	750
Cooling power input		W	70	70	70
Cooling current input		A	0.31	0.31	0.31
Heating power input		W	70	70	70
Heating current input		A	0.31	0.31	0.31
*Minimum line current		A	0.5	0.5	0.5
*Maximum fuse current		A	6	6	6
Sound pressure level		dB(A)	44	44	44
Power supply			220-240V 1 phase ~50Hz		
Piping interface	Liquid pipe	mm	Φ9.52	Φ9.52	Φ9.52
	Gas pipe	mm	Φ15.9	Φ15.9	Φ15.9
Drain pipe	External diameter× thickness	mm	Φ20×1.5	Φ20×1.5	Φ20×1.5
Dimensions	W×D×H	mm	1008×221×319	1008×221×319	1008×221×319
Net weight		kg	15	15	15

Model			GMV-N22G/ A4A-K	GMV-N28G/ A4A-K	GMV-N36G/ A4A-K	GMV-N45G/ A4A-K	GMV-N50G/ A4A-K
Cooling capacity		kW	2.2	2.8	3.6	4.5	5.0
Heating capacity		kW	2.5	3.2	4.0	5.0	5.8
Air volume		m³/h	500	500	630	630	630
Cooling power input		W	50	50	60	60	60
Cooling current input		A	0.2	0.2	0.31	0.31	0.31
Heating power input		W	50	50	60	60	60
Heating current input		A	0.2	0.2	0.31	0.31	0.31
*Minimum line current		A	0.25	0.25	0.38	0.38	0.38
*Maximum fuse current		A	6	6	6	6	6
Sound pressure level		dB(A)	38	38	44	44	44
Power supply			220-240V 1 phase ~50Hz				
Piping interface	Liquid pipe	mm	Φ6.35	Φ6.35	Φ6.35	Φ6.35	Φ6.35
	Gas pipe	mm	Φ9.52	Φ9.52	Φ12.7	Φ12.7	Φ12.7
Drain pipe	External diameter ×thickness	mm	Φ20×1.5	Φ20×1.5	Φ20×1.5	Φ20×1.5	Φ20×1.5
Dimensions	W×D×H	mm	843×180×275	843×180×275	940×200×298	940×200×298	940×200×298
Net weight		kg	10	10	12.5	12.5	12.5

Model			GMV-N56G/A4A-K	GMV-N63G/A4A-K	GMV-N71G/A4A-K
Cooling capacity		kW	5.6	6.3	7.1
Heating capacity		kW	6.3	7.0	7.5
Air volume		m³/h	750	750	750
Cooling power input		W	70	70	70
Cooling current input		A	0.31	0.31	0.31
Heating power input		W	70	70	70
Heating current input		A	0.31	0.31	0.31
*Minimum line current		A	0.5	0.5	0.5
*Maximum fuse current		A	6	6	6
Sound pressure level		dB(A)	44	44	44
Power supply			220-240V 1 phase ~50Hz		
Piping interface	Liquid pipe	mm	Φ9.52	Φ9.52	Φ9.52
	Gas pipe	mm	Φ15.9	Φ15.9	Φ15.9
Drain pipe	External diameter ×thickness	mm	Φ20×1.5	Φ20×1.5	Φ20×1.5
Dimensions	W×D×H	mm	1008×221×319	1008×221×319	1008×221×319
Net weight		kg	15	15	15

Model			GMV-N22G/ A8A-K	GMV-N28G/ A8A-K	GMV-N36G/ A8A-K	GMV-N45G/ A8A-K	GMV-N50G/ A8A-K
Cooling capacity		kW	2.2	2.8	3.6	4.5	5.0
Heating capacity		kW	2.5	3.2	4.0	5.0	5.8
Air volume		m³/h	500	500	630	630	630
Cooling power input		W	50	50	60	60	60
Cooling current input		A	0.2	0.2	0.31	0.31	0.31
Heating power input		W	50	50	60	60	60
Heating current input		A	0.2	0.2	0.31	0.31	0.31
*Minimum line current		A	0.25	0.25	0.38	0.38	0.38
*Maximum fuse current		A	6	6	6	6	6
Sound pressure level		dB(A)	38	38	44	44	44
Power supply			220-240V 1 phase ~50Hz				
Piping interface	Liquid pipe	mm	Φ6.35	Φ6.35	Φ6.35	Φ6.35	Φ6.35
	Gas pipe	mm	Φ9.52	Φ9.52	Φ12.7	Φ12.7	Φ12.7
Drain pipe	External diameter× thickness	mm	Φ20×1.5	Φ20×1.5	Φ20×1.5	Φ20×1.5	Φ20×1.5
Dimensions	W×D×H	mm	843×180×275	843×180×275	940×200×298	940×200×298	940×200×298
Net weight		kg	10	10	12.5	12.5	12.5

Model			GMV-N56G/A8A-K	GMV-N63G/A8A-K	GMV-N71G/A8A-K
Cooling capacity		kW	5.6	6.3	7.1
Heating capacity		kW	6.3	7.0	7.5
Air volume		m³/h	750	750	750
Cooling power input		W	70	70	70
Cooling current input		A	0.31	0.31	0.31
Heating power input		W	70	70	70
Heating current input		A	0.31	0.31	0.31
*Minimum line current		A	0.5	0.5	0.5
*Maximum fuse current		A	6	6	6
Sound pressure level		dB(A)	44	44	44
Power supply			220-240V 1 phase ~50Hz		
Piping interface	Liquid pipe	mm	Φ9.52	Φ9.52	Φ9.52
	Gas pipe	mm	Φ15.9	Φ15.9	Φ15.9
Drain pipe	External diameter× thickness	mm	Φ20×1.5	Φ20×1.5	Φ20×1.5
Dimensions	W×D×H	mm	1008×221×319	1008×221×319	1008×221×319
Net weight		kg	15	15	15

Model			GMV-N22G /C9A-K	GMV-N28G/ C9A -K	GMV-N36G/ C9A-K	GMV-N45G/ C9A -K	GMV-N50G/ C9A -K
Cooling capacity		kW	2.2	2.8	3.6	4.5	5.0
Heating capacity		kW	2.5	3.2	4.0	5.0	5.8
Air volume		m³/h	500	500	630	630	630
Cooling power input		W	50	50	60	60	60
Cooling current input		A	0.2	0.2	0.31	0.31	0.31
Heating power input		W	50	50	60	60	60
Heating current input		A	0.2	0.2	0.31	0.31	0.31
*Minimum line current		A	0.25	0.25	0.38	0.38	0.38
*Maximum fuse current		A	6	6	6	6	6
Sound pressure level		dB(A)	38	38	44	44	44
Power supply			220-240V 1 phase ~50Hz				
Piping interface	Liquid pipe	mm	Φ6.35	Φ6.35	Φ6.35	Φ6.35	Φ6.35
	Gas pipe	mm	Φ9.52	Φ9.52	Φ12.7	Φ12.7	Φ12.7
Drain pipe	External diameter× thickness	mm	Φ20×1.5	Φ20×1.5	Φ20×1.5	Φ20×1.5	Φ20×1.5
Dimensions	W×D×H	mm	843×180×275	843×180×275	940×200×298	940×200×298	940×200×298
Net weight		kg	10	10	12.5	12.5	12.5

Model			GMV-N56G/C9A -K	GMV-N63G/C9A -K	GMV-N71G/C9A -K
Cooling capacity		kW	5.6	6.3	7.1
Heating capacity		kW	6.3	7.0	7.5
Air volume		m³/h	750	750	750
Cooling power input		W	70	70	70
Cooling current input		A	0.31	0.31	0.31
Heating power input		W	70	70	70
Heating current input		A	0.31	0.31	0.31
*Minimum line current		A	0.5	0.5	0.5
*Maximum fuse current		A	6	6	6
Sound pressure level		dB(A)	44	44	44
Power supply			220-240V 1 phase ~50Hz		
Piping interface	Liquid pipe	mm	Φ9.52	Φ9.52	Φ9.52
	Gas pipe	mm	Φ15.9	Φ15.9	Φ15.9
Drain pipe	External diameter× thickness	mm	Φ20×1.5	Φ20×1.5	Φ20×1.5
Dimensions	W×D×H	mm	1008×221×319	1008×221×319	1008×221×319
Net weight		kg	15	15	15

Model			GMV-N22G /E3A-K	GMV-N28G/ E3A -K	GMV-N36G/ E3A -K	GMV-N45G/ E3A -K	GMV-N50G/ E3A -K
Cooling capacity		kW	2.2	2.8	3.6	4.5	5.0
Heating capacity		kW	2.5	3.2	4.0	5.0	5.8
Air volume		m³/h	500	500	630	630	630
Cooling power input		W	50	50	60	60	60
Cooling current input		A	0.2	0.2	0.31	0.31	0.31
Heating power input		W	50	50	60	60	60
Heating current input		A	0.2	0.2	0.31	0.31	0.31
*Minimum line current		A	0.25	0.25	0.38	0.38	0.38
*Maximum fuse current		A	6	6	6	6	6
Sound pressure level		dB(A)	38	38	44	44	44
Power supply			220-240V 1 phase ~50Hz				
Piping interface	Liquid pipe	mm	Φ6.35	Φ6.35	Φ6.35	Φ6.35	Φ6.35
	Gas pipe	mm	Φ9.52	Φ9.52	Φ12.7	Φ12.7	Φ12.7
Drain pipe	External diameter ×thickness	mm	Φ20×1.5	Φ20×1.5	Φ20×1.5	Φ20×1.5	Φ20×1.5
Dimensions	W×D×H	mm	843×180×275	843×180×275	940×200×298	940×200×298	940×200×298
Net weight		kg	10	10	12.5	12.5	12.5

Model			GMV-N56G/ E3A -K	GMV-N63G/ E3A -K	GMV-N71G/ E3A -K
Cooling capacity		kW	5.6	6.3	7.1
Heating capacity		kW	6.3	7.0	7.5
Air volume		m³/h	750	750	750
Cooling power input		W	70	70	70
Cooling current input		A	0.31	0.31	0.31
Heating power input		W	70	70	70
Heating current input		A	0.31	0.31	0.31
*Minimum line current		A	0.5	0.5	0.5
*Maximum fuse current		A	6	6	6
Sound pressure level		dB(A)	44	44	44
Power supply			220-240V 1 phase ~50Hz		
Piping interface	Liquid pipe	mm	Φ9.52	Φ9.52	Φ9.52
	Gas pipe	mm	Φ15.9	Φ15.9	Φ15.9
Drain pipe	External diameter ×thickness	mm	Φ20×1.5	Φ20×1.5	Φ20×1.5
Dimensions	W×D×H	mm	1008×221×319	1008×221×319	1008×221×319
Net weight		kg	15	15	15

Model			GMV-N22G/A3A-D	GMV-N28G/A3A-D	GMV-N36G/A3A-D	GMV-N45G/A3A-D
Cooling capacity		kW	2.2	2.8	3.6	4.5
Heating capacity		kW	2.5	3.2	4.0	5.0
Air volume		m³/h	500	500	630	630
Cooling power input		W	50	50	60	60
Cooling current input		A	0.2	0.2	0.21	0.21
Heating power input		W	50	50	60	60
Heating current input		A	0.2	0.2	0.21	0.21
*Minimum line current		A	0.25	0.25	0.38	0.38
*Maximum fuse current		A	6	6	6	6
Sound pressure level		dB(A)	38	38	44	44
Power supply			208-230V~60Hz			
Piping interface	Liquid pipe	mm	Φ6.35	Φ6.35	Φ6.35	Φ6.35
	Gas pipe	mm	Φ9.52	Φ9.52	Φ12.7	Φ12.7
Drain pipe	External diameter ×thickness	mm	Φ20×1.5	Φ20×1.5	Φ20×1.5	Φ20×1.5
Dimensions	W×D×H	mm	843×180×275	843×180×275	940×200×298	940×200×298
Net weight	Main body	kg	10.0	10.0	12.5	12.5

Model			GMV-N50G/A3A-D	GMV-N56G/A3A-D	GMV-N63G/A3A-D	GMV-N71G/A3A-D
Cooling capacity		kW	5.0	5.6	6.3	7.1
Heating capacity		kW	5.8	6.3	7.0	7.5
Air volume		m³/h	630	750	750	750
Cooling power input		W	60	70	70	70
Cooling current input		A	0.21	0.31	0.31	0.31
Heating power input		W	60	70	70	70
Heating current input		A	0.21	0.31	0.31	0.31
*Minimum line current		A	0.38	0.5	0.5	0.5
*Maximum fuse current		A	6	6	6	6
Sound pressure level		dB(A)	44	44	44	44
Power supply			208-230V~60Hz			
Piping interface	Liquid pipe	mm	Φ6.35	Φ9.52	Φ9.52	Φ9.52
	Gas pipe	mm	Φ12.7	Φ15.9	Φ15.9	Φ15.9
Drain pipe	External diameter× thickness	mm	Φ20×1.5	Φ20×1.5	Φ20×1.5	Φ20×1.5
Dimensions	W×D×H	mm	940×200×298	1008×221×319	1008×221×319	1008×221×319
Net weight	Main body	kg	12.5	15.0	15.0	15.0

Model			GMV-N22G/A2A-D	GMV-N28G/A2A-D	GMV-N36G/A2A-D	GMV-N45G/A2A-D
Cooling capacity		kW	2.2	2.8	3.6	4.5
Heating capacity		kW	2.5	3.2	4.0	5.0
Air volume		m³/h	500	500	630	630
Cooling power input		W	50	50	60	60
Cooling current input		A	0.2	0.2	0.21	0.21
Heating power input		W	50	50	60	60
Heating current input		A	0.2	0.2	0.21	0.21
*Minimum line current		A	0.25	0.25	0.38	0.38
*Maximum fuse current		A	6	6	6	6
Sound pressure level		dB(A)	38	38	44	44
Power supply			208-230V~60Hz			
Piping interface	Liquid pie	mm	Φ6.35	Φ6.35	Φ6.35	Φ6.35
	Gas pipe	mm	Φ9.52	Φ9.52	Φ12.7	Φ12.7
Drain pipe	Outer diameter×Wall thickness	mm	Φ20×1.5	Φ20×1.5	Φ20×1.5	Φ20×1.5
Dimensions	W×D×H	mm	843×180×275	843×180×275	940×200×298	940×200×298
Net weight	Main body	kg	10.0	10.0	12.5	12.5

Model			GMV-N50G/A2A-D	GMV-N56G/A2A-D	GMV-N63G/A2A-D	GMV-N71G/A2A-D
Cooling capacity		kW	5.0	5.6	6.3	7.1
Heating capacity		kW	5.8	6.3	7.0	7.5
Air volume		m³/h	630	750	750	750
Cooling power input		W	60	70	70	70
Cooling current input		A	0.21	0.31	0.31	0.31
Heating power input		W	60	70	70	70
Heating current input		A	0.21	0.31	0.31	0.31
*Minimum line current		A	0.38	0.5	0.5	0.5
*Maximum fuse current		A	6	6	6	6
Sound pressure level		dB(A)	44	44	44	44
Power supply			208-230V~60Hz			
Piping interface	Liquid pie	mm	Φ6.35	Φ9.52	Φ9.52	Φ9.52
	Gas pipe	mm	Φ12.7	Φ15.9	Φ15.9	Φ15.9
Drain pipe	Outer diameter×Wall thickness	mm	Φ20×1.5	Φ20×1.5	Φ20×1.5	Φ20×1.5
Dimensions	W×D×H	mm	940×200×298	1008×221×319	1008×221×319	1008×221×319
Net weight	Main body	kg	12.5	15.0	15.0	15.0

Model			GMV-N22G/A4A-D	GMV-N28G/A4A-D	GMV-N36G/A4A-D	GMV-N45G/A4A-D
Cooling capacity		kW	2.2	2.8	3.6	4.5
Heating capacity		kW	2.5	3.2	4.0	5.0
Air volume		m³/h	500	500	630	630
Cooling power input		W	50	50	60	60
Cooling current input		A	0.2	0.2	0.21	0.21
Heating power input		W	50	50	60	60
Heating current input		A	0.2	0.2	0.21	0.21
*Minimum line current		A	0.25	0.25	0.38	0.38
*Maximum fuse current		A	6	6	6	6
Sound pressure level		dB(A)	38	38	44	44
Power supply			208-230V~60Hz			
Piping interface	Liquid pie	mm	Φ6.35	Φ6.35	Φ6.35	Φ6.35
	Gas pipe	mm	Φ9.52	Φ9.52	Φ12.7	Φ12.7
Drain pipe	Outer diameter× Wall thickness	mm	Φ20×1.5	Φ20×1.5	Φ20×1.5	Φ20×1.5
Dimensions	W×D×H	mm	843×180×275	843×180×275	940×200×298	940×200×298
Net weight	Main body	kg	10.0	10.0	12.5	12.5

Model			GMV-N50G/A4A-D	GMV-N56G/A4A-D	GMV-N63G/A4A-D	GMV-N71G/A4A-D
Cooling capacity		kW	5.0	5.6	6.3	7.1
Heating capacity		kW	5.8	6.3	7.0	7.5
Air volume		m³/h	630	750	750	750
Cooling power input		W	60	70	70	70
Cooling current input		A	0.21	0.31	0.31	0.31
Heating power input		W	60	70	70	70
Heating current input		A	0.21	0.31	0.31	0.31
*Minimum line current		A	0.38	0.5	0.5	0.5
*Maximum fuse current		A	6	6	6	6
Sound pressure level		dB(A)	44	44	44	44
Power supply			208-230V~60Hz			
Piping interface	Liquid pipe	mm	Φ6.35	Φ9.52	Φ9.52	Φ9.52
	Gas pipe	mm	Φ12.7	Φ15.9	Φ15.9	Φ15.9
Drain pipe	Outer diameter×Wall thickness	mm	Φ20×1.5	Φ20×1.5	Φ20×1.5	Φ20×1.5
Dimensions	W×D×H	mm	940×200×298	1008×221×319	1008×221×319	1008×221×319
Net weight	Main body	kg	12.5	15.0	15.0	15.0

Model			GMV-N22G/A8A-D	GMV-N28G/A8A-D	GMV-N36G/A8A-D	GMV-N45G/A8A-D
Cooling capacity		kW	2.2	2.8	3.6	4.5
Heating capacity		kW	2.5	3.2	4.0	5.0
Air volume		m³/h	500	500	630	630
Cooling power input		W	50	50	60	60
Cooling current input		A	0.2	0.2	0.21	0.21
Heating power input		W	50	50	60	60
Heating current input		A	0.2	0.2	0.21	0.21
*Minimum line current		A	0.25	0.25	0.38	0.38
*Maximum fuse current		A	6	6	6	6
Sound pressure level		dB(A)	38	38	44	44
Power supply			208-230V~60Hz			
Piping interface	Liquid pie	mm	Φ6.35	Φ6.35	Φ6.35	Φ6.35
	Gas pipe	mm	Φ9.52	Φ9.52	Φ12.7	Φ12.7
Drain pipe	Outer diameter×Wall thickness	mm	Φ20×1.5	Φ20×1.5	Φ20×1.5	Φ20×1.5
Dimensions	W×D×H	mm	843×180×275	843×180×275	940×200×298	940×200×298
Net weight	Main body	kg	10.0	10.0	12.5	12.5

Model			GMV-N50G/A8A-D	GMV-N56G/A8A-D	GMV-N63G/A8A-D	GMV-N71G/A8A-D
Cooling capacity		kW	5.0	5.6	6.3	7.1
Heating capacity		kW	5.8	6.3	7.0	7.5
Air volume		m³/h	630	750	750	750
Cooling power input		W	60	70	70	70
Cooling current input		A	0.21	0.31	0.31	0.31
Heating power input		W	60	70	70	70
Heating current input		A	0.21	0.31	0.31	0.31
*Minimum line current		A	0.38	0.5	0.5	0.5
*Maximum fuse current		A	6	6	6	6
Sound pressure level		dB(A)	44	44	44	44
Power supply			208-230V~60Hz			
Piping interface	Liquid pie	mm	Φ6.35	Φ9.52	Φ9.52	Φ9.52
	Gas pipe	mm	Φ12.7	Φ15.9	Φ15.9	Φ15.9
Drain pipe	Outer diameter×Wall thickness	mm	Φ20×1.5	Φ20×1.5	Φ20×1.5	Φ20×1.5
Dimensions	W×D×H	mm	940×200×298	1008×221×319	1008×221×319	1008×221×319
Net weight	Main body	kg	12.5	15.0	15.0	15.0

Model			GMV-N22G/C9A-D	GMV-N28G/C9A-D	GMV-N36G/C9A-D	GMV-N45G/C9A-D
Cooling capacity		kW	2.2	2.8	3.6	4.5
Heating capacity		kW	2.5	3.2	4.0	5.0
Air volume		m³/h	500	500	630	630
Cooling power input		W	50	50	60	60
Cooling current input		A	0.2	0.2	0.21	0.21
Heating power input		W	50	50	60	60
Heating current input		A	0.2	0.2	0.21	0.21
*Minimum line current		A	0.25	0.25	0.38	0.38
*Maximum fuse current		A	6	6	6	6
Sound pressure level		dB(A)	38	38	44	44
Power supply			208-230V~60Hz			
Piping interface	Liquid pipe	mm	Φ6.35	Φ6.35	Φ6.35	Φ6.35
	Gas pipe	mm	Φ9.52	Φ9.52	Φ12.7	Φ12.7
Drain pipe	Outer diameter× Wall thickness	mm	Φ20×1.5	Φ20×1.5	Φ20×1.5	Φ20×1.5
Dimensions	W×D×H	mm	843×180×275	843×180×275	940×200×298	940×200×298
Net weight	Main body	kg	10.0	10.0	12.5	12.5

Model			GMV-N50G/C9A-D	GMV-N56G/C9A-D	GMV-N63G/C9A-D	GMV-N71G/C9A-D
Cooling capacity		kW	5.0	5.6	6.3	7.1
Heating capacity		kW	5.8	6.3	7.0	7.5
Air volume		m³/h	630	750	750	750
Cooling power input		W	60	70	70	70
Cooling current input		A	0.21	0.31	0.31	0.31
Heating power input		W	60	70	70	70
Heating current input		A	0.21	0.31	0.31	0.31
*Minimum line current		A	0.38	0.5	0.5	0.5
*Maximum fuse current		A	6	6	6	6
Sound pressure level		dB(A)	44	44	44	44
Power supply			208-230V~60Hz			
Piping interface	Liquid pipe	mm	Φ6.35	Φ9.52	Φ9.52	Φ9.52
	Gas pipe	mm	Φ12.7	Φ15.9	Φ15.9	Φ15.9
Drain pipe	Outer diameter× Wall thickness	mm	Φ20×1.5	Φ20×1.5	Φ20×1.5	Φ20×1.5
Dimensions	W×D×H	mm	940×200×298	1008×221×319	1008×221×319	1008×221×319
Net weight	Main body	kg	12.5	15.0	15.0	15.0

Model			GMV-N22G/E3A-D	GMV-N28G/E3A-D	GMV-N36G/E3A-D	GMV-N45G/E3A-D
Cooling capacity		kW	2.2	2.8	3.6	4.5
Heating capacity		kW	2.5	3.2	4.0	5.0
Air volume		m³/h	500	500	630	630
Cooling power input		W	50	50	60	60
Cooling current input		A	0.2	0.2	0.21	0.21
Heating power input		W	50	50	60	60
Heating current input		A	0.2	0.2	0.21	0.21
*Minimum line current		A	0.25	0.25	0.38	0.38
*Maximum fuse current		A	6	6	6	6
Sound pressure level		dB(A)	38	38	44	44
Power supply			208-230V~60Hz			
Piping interface	Liquid pie	mm	Φ6.35	Φ6.35	Φ6.35	Φ6.35
	Gas pipe	mm	Φ9.52	Φ9.52	Φ12.7	Φ12.7
Drain pipe	Outer diameter× Wall thickness	mm	Φ20×1.5	Φ20×1.5	Φ20×1.5	Φ20×1.5
Dimensions	W×D×H	mm	843×180×275	843×180×275	940×200×298	940×200×298
Net weight	Main body	kg	10.0	10.0	12.5	12.5

Model			GMV-N50G/E3A-D	GMV-N56G/E3A-D	GMV-N63G/E3A-D	GMV-N71G/E3A-D
Cooling capacity		kW	5.0	5.6	6.3	7.1
Heating capacity		kW	5.8	6.3	7.0	7.5
Air volume		m³/h	630	750	750	750
Cooling power input		W	60	70	70	70
Cooling current input		A	0.21	0.31	0.31	0.31
Heating power input		W	60	70	70	70
Heating current input		A	0.21	0.31	0.31	0.31
*Minimum line current		A	0.38	0.5	0.5	0.5
*Maximum fuse current		A	6	6	6	6
Sound pressure level		dB(A)	44	44	44	44
Power supply			208-230V~60Hz			
Piping interface	Liquid pie	mm	Φ6.35	Φ9.52	Φ9.52	Φ9.52
	Gas pipe	mm	Φ12.7	Φ15.9	Φ15.9	Φ15.9
Drain pipe	Outer diameter ×Wall thickness	mm	Φ20×1.5	Φ20×1.5	Φ20×1.5	Φ20×1.5
Dimensions	W×D×H	mm	940×200×298	1008×221×319	1008×221×319	1008×221×319
Net weight	Main body	kg	12.5	15.0	15.0	15.0

Model			GMV-N22G/B3A-D	GMV-N28G/B3A-D	GMV-N36G/B3A-D	GMV-N45G/B3A-D
Cooling capacity		kW	2.2	2.8	3.6	4.5
Heating capacity		kW	2.5	3.2	4.0	5.0
Air volume		m³/h	500	500	630	630
Cooling power input		W	50	50	60	60
Cooling current input		A	0.2	0.2	0.21	0.21
Heating power input		W	50	50	60	60
Heating current input		A	0.2	0.2	0.21	0.21
*Minimum line current		A	0.25	0.25	0.38	0.38
*Maximum fuse current		A	6	6	6	6
Sound pressure level		dB(A)	38	38	44	44
Power supply			208-230V~60Hz			
Piping interface	Liquid pipe	mm	Φ6.35	Φ6.35	Φ6.35	Φ6.35
	Gas pipe	mm	Φ9.52	Φ9.52	Φ12.7	Φ12.7
Drain pipe	External diameter× thickness	mm	Φ20×1.5	Φ20×1.5	Φ20×1.5	Φ20×1.5
Dimensions	W×D×H	mm	843×180×275	843×180×275	940×200×298	940×200×298
Net weight	Main body	kg	10.0	10.0	12.5	12.5

Model			GMV-N50G/B3A-D	GMV-N56G/B3A-D	GMV-N63G/B3A-D	GMV-N71G/B3A-D
Cooling capacity		kW	5.0	5.6	6.3	7.1
Heating capacity		kW	5.8	6.3	7.0	7.5
Air volume		m³/h	630	750	750	750
Cooling power input		W	60	70	70	70
Cooling current input		A	0.21	0.31	0.31	0.31
Heating power input		W	60	70	70	70
Heating current input		A	0.21	0.31	0.31	0.31
*Minimum line current		A	0.38	0.5	0.5	0.5
*Maximum fuse current		A	6	6	6	6
Sound pressure level		dB(A)	44	44	44	44
Power supply			208-230V~60Hz			
Piping interface	Liquid pipe	mm	Φ6.35	Φ9.52	Φ9.52	Φ9.52
	Gas pipe	mm	Φ12.7	Φ15.9	Φ15.9	Φ15.9
Drain pipe	External diameter× thickness	mm	Φ20×1.5	Φ20×1.5	Φ20×1.5	Φ20×1.5
Dimensions	W×D×H	mm	940×200×298	1008×221×319	1008×221×319	1008×221×319
Net weight	Main body	kg	12.5	15.0	15.0	15.0

Model			GMV-ND22 G/A3A-T	GMV-ND28 G/A3A-T	GMV-ND36 G/A3A-T	GMV-ND45 G/A3A-T	GMV-ND50 G/A3A-T	GMV-ND56 G/A3A-T
Cooling capacity		kW	2.2	2.8	3.6	4.5	5.0	5.6
Heating capacity		kW	2.5	3.2	4.0	5.0	5.8	6.3
Air volume		m³/h	500	500	630	630	630	750
Cooling power input		W	20	20	30	30	30	40
Cooling current input		A	0.1	0.1	0.16	0.16	0.16	0.17
Heating power input		W	20	20	30	30	30	40
Heating current input		A	0.1	0.1	0.16	0.16	0.16	0.17
*Minimum line current		A	0.1	0.1	0.15	0.15	0.15	0.2
*Maximum fuse current		A	6	6	6	6	6	6
Sound pressure level		dB(A)	38	38	44	44	44	44
Power supply			220-240V 1 phase ~50Hz/208-230V 1 phase ~60Hz					
Piping interface	Liquid pipe	mm	Φ6.35	Φ6.35	Φ6.35	Φ6.35	Φ6.35	Φ9.52
	Gas pipe	mm	Φ9.52	Φ9.52	Φ12.7	Φ12.7	Φ12.7	Φ15.9
Drain pipe	External diameter× thickness	mm	Φ20×1.5	Φ20×1.5	Φ20×1.5	Φ20×1.5	Φ20×1.5	Φ20×1.5
Dimensions	W×D×H	mm	843×180 ×275	843×180 ×275	940×200 ×298	940×200 ×298	940×200 ×298	1008×221 ×319
Net weight	Main body	kg	10.0	10.0	12.5	12.5	12.5	15.0

Model			GMV-ND63 G/A3A-T	GMV-ND71 G/A3A-T	GMV-ND80 G/A3A-T	GMV-ND90 G/A3A-T	GMV-ND100 G/A3A-T
Cooling capacity		kW	6.3	7.1	8.0	9.0	9.5
Heating capacity		kW	7.0	7.5	9.0	10.0	10.5
Air volume		m³/h	750	750	1550	1550	1650
Cooling power input		W	40	40	80	80	100
Cooling current input		A	0.17	0.17	0.41	0.41	0.41
Heating power input		W	40	40	80	80	100
Heating current input		A	0.17	0.17	0.41	0.41	0.41
*Minimum line current		A	0.2	0.2	0.2	0.2	0.2
*Maximum fuse current		A	6	6	6	6	6
Sound pressure level		dB(A)	44	44	49	49	52
Power supply			220-240V 1 phase ~50Hz/208-230V 1 phase ~60Hz				
Piping interface	Liquid pipe	mm	Φ9.52	Φ9.52	Φ9.52	Φ9.52	Φ9.52
	Gas pipe	mm	Φ15.9	Φ15.9	Φ15.9	Φ15.9	Φ15.9
Drain pipe	External diameter ×thickness	mm	Φ20×1.5	Φ20×1.5	Φ20×1.5	Φ20×1.5	Φ20×1.5
Dimensions	W×D×H	mm	1008×221 ×319	1008×221 ×319	1350×258 ×326	1350×258 ×326	1350×258 ×326
Net weight	Main body	kg	15.0	15.0	18.5	18.5	18.5

Model			GMV-ND22G/A8A-T	GMV-ND28G/A8A-T	GMV-ND36G/A8A-T	GMV-ND45G/A8A-T	GMV-ND50G/A8A-T	GMV-ND56G/A8A-T
Cooling capacity		kW	2.2	2.8	3.6	4.5	5.0	5.6
Heating capacity		kW	2.5	3.2	4.0	5.0	5.8	6.3
Air volume		m³/h	500	500	630	630	630	750
Cooling power input		W	20	20	30	30	30	40
Cooling current input		A	0.1	0.1	0.16	0.16	0.16	0.17
Heating power input		W	20	20	30	30	30	40
Heating current input		A	0.1	0.1	0.16	0.16	0.16	0.17
*Minimum line current		A	0.1	0.1	0.15	0.15	0.15	0.2
*Maximum fuse current		A	6	6	6	6	6	6
Sound pressure level		dB(A)	38	38	44	44	44	44
Power supply			220-240V 1 phase ~50Hz/208-230V 1 phase ~60Hz					
Piping interface	Liquid pipe	mm	Φ6.35	Φ6.35	Φ6.35	Φ6.35	Φ6.35	Φ9.52
	Gas pipe	mm	Φ9.52	Φ9.52	Φ12.7	Φ12.7	Φ12.7	Φ15.9
Drain pipe	External diameter× thickness	mm	Φ20×1.5	Φ20×1.5	Φ20×1.5	Φ20×1.5	Φ20×1.5	Φ20×1.5
Dimensions	W×D×H	mm	843×180 ×275	843×180 ×275	940×200 ×298	940×200 ×298	940×200 ×298	1008×221 ×319
Net weight	Main body	kg	10.0	10.0	12.5	12.5	12.5	15.0

Model			GMV-ND63G/A8A-T	GMV-ND71G/A8A-T	GMV-ND80G/A8A-T	GMV-ND90G/A8A-T	GMV-ND100G/A8A-T
Cooling capacity		kW	6.3	7.1	8.0	9.0	9.5
Heating capacity		kW	7.0	7.5	9.0	10.0	10.5
Air volume		m³/h	750	750	1550	1550	1650
Cooling power input		W	40	40	80	80	100
Cooling current input		A	0.17	0.17	0.41	0.41	0.41
Heating power input		W	40	40	80	80	100
Heating current input		A	0.17	0.17	0.41	0.41	0.41
*Minimum line current		A	0.2	0.2	0.2	0.2	0.2
*Maximum fuse current		A	6	6	6	6	6
Sound pressure level		dB(A)	44	44	49	49	52
Power supply			220-240V 1 phase ~50Hz/208-230V 1 phase ~60Hz				
Piping interface	Liquid pipe	mm	Φ9.52	Φ9.52	Φ9.52	Φ9.52	Φ9.52
	Gas pipe	mm	Φ15.9	Φ15.9	Φ15.9	Φ15.9	Φ15.9
Drain pipe	External diameter ×thickness	mm	Φ20×1.5	Φ20×1.5	Φ20×1.5	Φ20×1.5	Φ20×1.5
Dimensions	W×D×H	mm	1008×221 ×319	1008×221 ×319	1350×258 ×326	1350×258 ×326	1350×258 ×326
Net weight	Main body	kg	15.0	15.0	18.5	18.5	18.5

Model			GMV-ND15G/B6B-T	GMV-ND18G/ B6B-T	GMV-ND22G/B6B-T	GMV-ND28G/B6B-T	GMV-ND36G/B6B-T	GMV-ND45G/B6B-T
Cooling capacity		kW	1.5	1.8	2.2	2.8	3.6	4.5
Heating capacity		kW	1.8	2.2	2.5	3.2	4.0	5.0
Air volume		m³/h	500	500	500	500	630	850
Cooling power input		W	20	20	20	20	25	35
Cooling current input		A	0.1	0.1	0.1	0.1	0.12	0.17
Heating power input		W	20	20	20	20	25	35
Heating current input		A	0.1	0.1	0.1	0.1	0.12	0.17
*Minimum line current		A	0.1	0.1	0.1	0.1	0.15	0.15
*Maximum fuse current		A	6	6	6	6	6	6
Sound pressure level		dB(A)	35	35	35	35	38	43
Power supply			220-240V 1 phase ~50Hz/208-230V 1 phase ~60Hz					
Piping interface	Liquid pipe	mm	Φ6.35	Φ6.35	Φ6.35	Φ6.35	Φ6.35	Φ6.35
	Gas pipe	mm	Φ9.52	Φ9.52	Φ9.52	Φ9.52	Φ12.7	Φ12.7
Drain pipe	Outer diameter × Wall thickness	mm	Φ20×1.5	Φ20×1.5	Φ20×1.5	Φ20×1.5	Φ20×1.5	Φ20×1.5
Dimensions W×D×H		mm	845×289×209	845×289×209	845×289×209	845×289×209	845×289×209	970×300×224
Net weight	Main body	kg	10.5	10.5	10.5	10.5	10.5	12.5

Model			GMV-ND50G/B6B-T	GMV-ND56G/B6B-T	GMV-ND63G/B6B-T	GMV-ND71G/B6B-T
Cooling capacity		kW	5.0	5.6	6.3	7.1
Heating capacity		kW	5.6	6.3	7.1	7.5
Air volume		m³/h	850	1100	1100	1200
Cooling power input		W	35	50	50	65
Cooling current input		A	0.17	0.24	0.24	0.31
Heating power input		W	35	50	50	65
Heating current input		A	0.17	0.24	0.24	0.31
*Minimum line current		A	0.15	0.2	0.2	0.2
*Maximum fuse current		A	6	6	6	6
Sound pressure level		dB(A)	43	43	43	44
Power supply			220-240V 1 phase ~50Hz/208-230V 1 phase ~60Hz			
Piping interface	Liquid pipe	mm	Φ6.35	Φ9.52	Φ9.52	Φ9.52
	Gas pipe	mm	Φ12.7	Φ15.9	Φ15.9	Φ15.9
Drain pipe	Outer diameter × Wall thickness	mm	Φ20×1.5	Φ20×1.5	Φ20×1.5	Φ20×1.5
Dimensions W×D×H		mm	970×300×224	1078×325×246	1078×325×246	1078×325×246
Net weight	Main body	kg	12.5	16	16	16

Model			GMV-ND15 G/B4B-T	GMV-ND18 G/B4B-T	GMV-ND22 G/B4B-T	GMV-ND28 G/B4B-T	GMV-ND36 G/B4B-T	GMV-ND45 G/B4B-T
Cooling capacity		kW	1.5	1.8	2.2	2.8	3.6	4.5
Heating capacity		kW	1.8	2.2	2.5	3.2	4.0	5.0
Air volume		m³/h	500	500	500	500	630	850
Cooling power input		W	20	20	20	20	25	35
Cooling current input		A	0.1	0.1	0.1	0.1	0.12	0.17
Heating power input		W	20	20	20	20	25	35
Heating current input		A	0.1	0.1	0.1	0.1	0.12	0.17
*Minimum line current		A	0.1	0.1	0.1	0.1	0.15	0.15
*Maximum fuse current		A	6	6	6	6	6	6
Sound pressure level		dB(A)	35	35	35	35	38	43
Power supply			220-240V 1 phase ~50Hz/208-230V 1 phase ~60Hz					
Piping interface	Liquid pipe	mm	Φ6.35	Φ6.35	Φ6.35	Φ6.35	Φ6.35	Φ6.35
	Gas pipe	mm	Φ9.52	Φ9.52	Φ9.52	Φ9.52	Φ12.7	Φ12.7
Drain pipe	External diameter × thickness	mm	Φ20×1.5	Φ20×1.5	Φ20×1.5	Φ20×1.5	Φ20×1.5	Φ20×1.5
Dimensions	W×D×H	mm	845×289 ×209	845×289 ×209	845×289 ×209	845×289 ×209	845×289 ×209	970×300 ×224
Net weight	Main body	kg	10.5	10.5	10.5	10.5	10.5	12.5

Model			GMV-ND50G/B4B-T	GMV-ND56G/B4B-T	GMV-ND63G/B4B-T	GMV-ND71G/B4B-T	GMV-ND80G/B4B-T	GMV-ND90G/B4B-T	GMV-ND100G/B4B-T
Cooling capacity		kW	5.0	5.6	6.3	7.1	8.0	9.0	9.5
Heating capacity		kW	5.6	6.3	7.1	7.5	9.0	10.0	10.5
Air volume		m³/h	850	1100	1100	1200	1550	1550	1650
Cooling power input		W	35	50	50	65	80	80	100
Cooling current input		A	0.17	0.24	0.24	0.31	0.41	0.41	0.41
Heating power input		W	35	50	50	65	80	80	100
Heating current input		A	0.17	0.24	0.24	0.31	0.41	0.41	0.41
*Minimum line current		A	0.15	0.2	0.2	0.2	0.2	0.2	0.2
*Maximum fuse current		A	6	6	6	6	6	6	6
Sound pressure level		dB(A)	43	43	43	44	49	49	52
Power supply			220-240V 1 phase ~50Hz/208-230V 1 phase ~60Hz						
Piping interface	Liquid pipe	mm	Φ6.35	Φ9.52	Φ9.52	Φ9.52	Φ9.52	Φ9.52	Φ9.52
	Gas pipe	mm	Φ12.7	Φ15.9	Φ15.9	Φ15.9	Φ15.9	Φ15.9	Φ15.9
Drain pipe	External diameter× thickness	mm	Φ20×1.5	Φ20×1.5	Φ20×1.5	Φ20×1.5	Φ20×1.5	Φ20×1.5	Φ20×1.5
Dimensions	W×D×H	mm	970×300 ×224	1078×325 ×246	1078×325 ×246	1078×325 ×246	1350×258 ×326	1350×258 ×326	1350×258 ×326
Net weight	Main body	kg	12.5	16	16	16	18.5	18.5	18.5

Model			GMV-ND22G/C4B-T	GMV-ND28G/C4B-T	GMV-ND36G/C4B-T	GMV-ND45G/C4B-T
Cooling capacity		kW	2.2	2.8	3.6	4.5
Heating capacity		kW	2.5	3.2	4.0	5.0
Air volume		m³/h	500	500	630	850
Cooling power input		W	20	20	25	35
Cooling current input		A	0.1	0.1	0.12	0.17
Heating power input		W	20	20	25	35
Heating current input		A	0.1	0.1	0.12	0.17
*Minimum line current		A	0.1	0.1	0.15	0.15
*Maximum fuse current		A	6	6	6	6
Sound pressure level		dB(A)	35	35	38	43
Power supply			220-240V 1 phase ~50Hz/208-230V 1 phase ~60Hz			
Piping interface	Liquid pipe	mm	Φ6.35	Φ6.35	Φ6.35	Φ6.35
	Gas pipe	mm	Φ9.52	Φ9.52	Φ12.7	Φ12.7
Drain pipe	Outer diameter × Wall thickness	mm	Φ20×1.5	Φ20×1.5	Φ20×1.5	Φ20×1.5
Dimensions W×D×H		mm	845×289×209	845×289×209	845×289×209	970×300×224
Net weight	Main body	kg	10.5	10.5	10.5	12.5

Model			GMV-ND50G/C4B-T	GMV-ND56G/C4B-T	GMV-ND63G/C4B-T	GMV-ND71G/C4B-T
Cooling capacity		kW	5.0	5.6	6.3	7.1
Heating capacity		kW	5.6	6.3	7.1	7.5
Air volume		m³/h	850	1100	1100	1200
Cooling power input		W	35	50	50	65
Cooling current input		A	0.17	0.24	0.24	0.31
Heating power input		W	35	50	50	65
Heating current input		A	0.17	0.24	0.24	0.31
*Minimum line current		A	0.15	0.2	0.2	0.2
*Maximum fuse current		A	6	6	6	6
Sound pressure level		dB(A)	43	43	43	44
Power supply			220-240V 1 phase ~50Hz/208-230V 1 phase ~60Hz			
Piping interface	Liquid pipe	mm	Φ6.35	Φ9.52	Φ9.52	Φ9.52
	Gas pipe	mm	Φ12.7	Φ15.9	Φ15.9	Φ15.9
Drain pipe	Outer diameter × Wall thickness	mm	Φ20×1.5	Φ20×1.5	Φ20×1.5	Φ20×1.5
Dimensions W×D×H		mm	970×300×224	1078×325×246	1078×325×246	1078×325×246
Net weight	Main body	kg	12.5	16	16	16

Model			GMV-ND22G/C2B-T	GMV-ND28G/C2B-T	GMV-ND36G/C2B-T	GMV-ND45G/C2B-T
Cooling capacity		kW	2.2	2.8	3.6	4.5
Heating capacity		kW	2.5	3.2	4.0	5.0
Air volume		m³/h	500	500	630	850
Cooling power input		W	20	20	25	35
Cooling current input		A	0.1	0.1	0.12	0.17
Heating power input		W	20	20	25	35
Heating current input		A	0.1	0.1	0.12	0.17
*Minimum line current		A	0.1	0.1	0.15	0.15
*Maximum fuse current		A	6	6	6	6
Sound pressure level		dB(A)	35	35	38	43
Power supply			220-240V 1 phase ~50Hz/208-230V 1 phase ~60Hz			
Piping interface	Liquid pipe	mm	Φ6.35	Φ6.35	Φ6.35	Φ6.35
	Gas pipe	mm	Φ9.52	Φ9.52	Φ12.7	Φ12.7
Drain pipe	Outer diameter × Wall thickness	mm	Φ20×1.5	Φ20×1.5	Φ20×1.5	Φ20×1.5
Dimensions W×D×H		mm	845×289×209	845×289×209	845×289×209	970×300×224
Net weight	Main body	kg	10.5	10.5	10.5	12.5

Model			GMV-ND50G/C2B-T	GMV-ND56G/C2B-T	GMV-ND63G/C2B-T	GMV-ND71G/C2B-T
Cooling capacity		kW	5.0	5.6	6.3	7.1
Heating capacity		kW	5.6	6.3	7.1	7.5
Air volume		m³/h	850	1100	1100	1200
Cooling power input		W	35	50	50	65
Cooling current input		A	0.17	0.24	0.24	0.31
Heating power input		W	35	50	50	65
Heating current input		A	0.17	0.24	0.24	0.31
*Minimum line current		A	0.15	0.2	0.2	0.2
*Maximum fuse current		A	6	6	6	6
Sound pressure level		dB(A)	43	43	43	44
Power supply			220-240V 1 phase ~50Hz/208-230V 1 phase ~60Hz			
Piping interface	Liquid pipe	mm	Φ6.35	Φ9.52	Φ9.52	Φ9.52
	Gas pipe	mm	Φ12.7	Φ15.9	Φ15.9	Φ15.9
Drain pipe	Outer diameter × Wall thickness	mm	Φ20×1.5	Φ20×1.5	Φ20×1.5	Φ20×1.5
Dimensions W×D×H		mm	970×300×224	1078×325×246	1078×325×246	1078×325×246
Net weight	Main body	kg	12.5	16	16	16

Model			GMV-ND22G/D2B-T	GMV-ND28G/D2B-T	GMV-ND36G/D2B-T	GMV-ND45G/D2B-T
Cooling capacity		kW	2.2	2.8	3.6	4.5
Heating capacity		kW	2.5	3.2	4.0	5.0
Air volume		m³/h	500	500	630	850
Cooling power input		W	20	20	25	35
Cooling current input		A	0.1	0.1	0.12	0.17
Heating power input		W	20	20	25	35
Heating current input		A	0.1	0.1	0.12	0.17
*Minimum line current		A	0.1	0.1	0.15	0.15
*Maximum fuse current		A	6	6	6	6
Sound pressure level		dB(A)	35	35	38	43
Power supply			220-240V 1 phase ~50Hz/208-230V 1 phase ~60Hz			
Piping interface	Liquid pipe	mm	Φ6.35	Φ6.35	Φ6.35	Φ6.35
	Gas pipe	mm	Φ9.52	Φ9.52	Φ12.7	Φ12.7
Drain pipe	Outer diameter × Wall thickness	mm	Φ20×1.5	Φ20×1.5	Φ20×1.5	Φ20×1.5
Dimensions	W×D×H	mm	845×289×209	845×289×209	845×289×209	970×300×224
Net weight	Main body	kg	10.5	10.5	10.5	12.5

Model			GMV-ND50G/D2B-T	GMV-ND56G/D2B-T	GMV-ND63G/D2B-T	GMV-ND71G/D2B-T
Cooling capacity		kW	5.0	5.6	6.3	7.1
Heating capacity		kW	5.6	6.3	7.1	7.5
Air volume		m³/h	850	1100	1100	1200
Cooling power input		W	35	50	50	65
Cooling current input		A	0.17	0.24	0.24	0.31
Heating power input		W	35	50	50	65
Heating current input		A	0.17	0.24	0.24	0.31
*Minimum line current		A	0.15	0.2	0.2	0.2
*Maximum fuse current		A	6	6	6	6
Sound pressure level		dB(A)	43	43	43	44
Power supply			220-240V 1 phase ~50Hz/208-230V 1 phase ~60Hz			
Piping interface	Liquid pipe	mm	Φ6.35	Φ9.52	Φ9.52	Φ9.52
	Gas pipe	mm	Φ12.7	Φ15.9	Φ15.9	Φ15.9
Drain pipe	Outer diameter × Wall thickness	mm	Φ20×1.5	Φ20×1.5	Φ20×1.5	Φ20×1.5
Dimensions	W×D×H	mm	970×300×224	1078×325×246	1078×325×246	1078×325×246
Net weight	Main body	kg	12.5	16	16	16

Notes:

① Rated Cooling capacity test conditions: indoor 27°C DB/19°C WB, outdoor 35°C DB; connection pipe length: 5 m, without height drop between units.

② Rated heating capacity test conditions: indoor 20°C DB, outdoor 7°C DB/6 °C WB; connection pipe length: 5 m, without height drop between units.

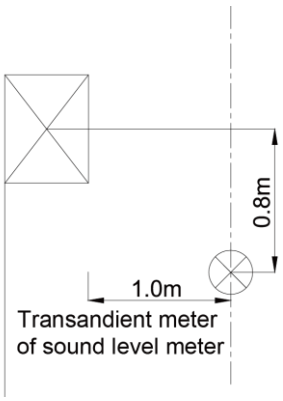

3.15 Super High Static Pressure Duct Type Indoor Unit

Model			GMV-ND22 PHS/B-T	GMV-ND25 PHS/B-T	GMV-ND28 PHS/B-T	GMV-ND32 PHS/B-T	GMV-ND36 PHS/B-T	GMV-ND40 PHS/B-T
Cooling capacity		kW	2.2	2.5	2.8	3.2	3.6	4
Heating capacity		kW	2.5	2.8	3.2	3.6	4	4.5
Air Volume		m³/h	550	550	550	600	600	850
External Static Pressure		Pa	60/0~150	60/0~150	60/0~150	60/0~150	60/0~150	60/0~150
Cooling power input		W	55	55	55	65	65	85
Cooling current input		A	0.5	0.5	0.5	0.5	0.5	0.5
Heating power input		W	55	55	55	65	65	85
Heating current input		A	0.5	0.5	0.5	0.5	0.5	0.5
Minimum line current		A	0.375	0.375	0.375	0.375	0.375	0.5
Maximum fuse current		A	6	6	6	6	6	6
Sound pressure level		dB(A)	33	33	33	33	33	36
Power supply			220-240V 1 phase ~50Hz/208-230V 1 phase ~60Hz					
Pipe diameter	Liquid pipe	mm	Φ6.35	Φ6.35	Φ6.35	Φ6.35	Φ6.35	Φ6.35
	Gas pipe	mm	Φ9.52	Φ9.52	Φ9.52	Φ12.7	Φ12.7	Φ12.7
Drain pipe	External diameter×thickness	mm	Φ25×2.5	Φ25×2.5	Φ25×2.5	Φ25×2.5	Φ25×2.5	Φ25×2.5
Outline Dimensions	W×D×H	mm	700×700 ×300	700×700 ×300	700×700 ×300	700×700 ×300	700×700 ×300	700×700 ×300
Net weight		kg	32	32	32	32	32	34

Model			GMV-ND45 PHS/B-T	GMV-ND50 PHS/B-T	GMV-ND56 PHS/B-T	GMV-ND63 PHS/B-T	GMV-ND71 PHS/B-T	GMV-ND80 PHS/B-T
Cooling capacity		kW	4.5	5.0	5.6	6.3	7.1	8.0
Heating capacity		kW	5.0	5.6	6.3	7.1	8.0	9.0
Air Volume		m³/h	850	850	1000	1000	1250	1250
External Static Pressure		Pa	60/0~150	60/0~150	90/0~200	90/0~200	90/0~200	90/0~200
Cooling power input		W	85	85	90	90	100	100
Cooling current input		A	0.5	0.5	0.8	0.8	0.8	0.8
Heating power input		W	85	85	90	90	100	100
Heating current input		A	0.5	0.5	0.8	0.8	0.8	0.8
Minimum line current		A	0.5	0.5	0.5	0.5	0.5	0.5
Maximum fuse current		A	6	6	6	6	6	6
Sound pressure level		dB(A)	36	36	37	37	38	38
Power supply			220-240V 1 phase ~50Hz/208-230V 1 phase ~60Hz					
Pipe diameter	Liquid pipe	mm	Φ6.35	Φ6.35	Φ9.52	Φ9.52	Φ9.52	Φ9.52
	Gas pipe	mm	Φ12.7	Φ12.7	Φ15.9	Φ15.9	Φ15.9	Φ15.9
Drain pipe	External diameter ×thickness	mm	Φ25×2.5	Φ25×2.5	Φ25×2.5	Φ25×2.5	Φ25×2.5	Φ25×2.5

Model			GMV-ND45 PHS/B-T	GMV-ND50 PHS/B-T	GMV-ND56 PHS/B-T	GMV-ND63 PHS/B-T	GMV-ND71 PHS/B-T	GMV-ND80 PHS/B-T
Outline Dimensions	W×D×H	mm	700×700 ×300	700×700 ×300	1000×700 ×300	1000×700 ×300	1000×700 ×300	1000×700 ×300
Net weight		kg	34	34	43	43	43	43

Model			GMV-ND90 PHS/B-T	GMV-ND100PHS/B-T	GMV-ND112PHS/B-T	GMV-ND125PHS/B-T	GMV-ND140PHS/B-T	GMV-ND160PHS/B-T
Cooling capacity		kW	9.0	10.0	11.2	12.5	14.0	16.0
Heating capacity		kW	10.0	11.2	12.5	14.0	16.0	18.0
Air Volume		m³/h	1800	1800	2000	2000	2350	2500
External Static Pressure		Pa	90/0~200	90/0~200	90/0~200	90/0~200	90/0~200	90/0~200
Cooling power input		W	140	140	160	160	220	230
Cooling current input		A	1.1	1.1	1.1	1.1	1.5	1.5
Heating power input		W	140	140	160	160	220	230
Heating current input		A	1.1	1.1	1.1	1.1	1.5	1.5
Minimum line current		A	0.75	0.75	0.875	0.875	1.25	1.25
Maximum fuse current		A	6	6	6	6	6	6
Sound pressure level		dB(A)	40	40	40	40	42	44
Power supply			220-240V 1 phase ~50Hz/208-230V 1 phase ~60Hz					
Pipe diameter	Liquid pipe	mm	Φ9.52	Φ9.52	Φ9.52	Φ9.52	Φ9.52	Φ9.52
	Gas pipe	mm	Φ15.9	Φ15.9	Φ15.9	Φ15.9	Φ15.9	Φ19.05
Drain pipe	External diameter ×thickness	mm	Φ25×2.5	Φ25×2.5	Φ25×2.5	Φ25×2.5	Φ25×2.5	Φ25×2.5
Outline Dimensions	W×D×H	mm	1400×700 ×300	1400×700 ×300	1400×700 ×300	1400×700 ×300	1400×700 ×300	1400×700 ×300
Net weight		kg	57	57	57	57	58	58

Model			GMV-ND180PHS/B-T
Cooling capacity		kW	18.0
Heating capacity		kW	20.0
Air Volume		m³/h	3000
External Static Pressure		Pa	90/0~170
Cooling power input		W	350
Cooling current input		A	2.0
Heating power input		W	350
Heating current input		A	2.0
Minimum line current		A	3.39
Maximum fuse current		A	6
Sound pressure level		dB(A)	49
Power supply			220-240V 1 phase ~50Hz/208-230V 1 phase ~60Hz
Pipe diameter	Liquid pipe	mm	Φ9.52
	Gas pipe	mm	Φ19.05
Drain pipe	External diameter×thickness	mm	Φ25×2.5
Outline Dimensions	W×D×H	mm	1400×700 ×300
Net weight		kg	58

Model			GMV-ND400PH/AR-X	GMV-ND450PH/AR-X	GMV-N560PH/AR-M
Cooling capacity		kW	40.0	45.0	56.0
Heating capacity		kW	45.0	50.0	63.0
Air Volume		m³/h	8000	8200	10000
External Static Pressure		Pa	200/50~250	200/50~250	200
Cooling power input		W	2500	2550	2700
Cooling current input		A	2.7	4.1	5.5
Heating power input		W	2500	2550	2700
Heating current input		A	2.7	4.1	5.5
Minimum line current		A	/	/	/
Maximum fuse current		A	/	/	/
Sound pressure level		dB(A)	61	62	63
Power supply			380-415V 3 phase ~50/60Hz	380V 3 phase ~50Hz	
Pipe diameter	Liquid pipe	mm	Φ12.7	Φ12.7	Φ15.9
	Gas pipe	mm	Φ25.4	Φ28.6	Φ28.6
Drain pipe	External diameter ×thickness	mm	Φ25×2	Φ25×2	Φ25×2
Outline Dimensions	W×D×H	mm	1680×900×650	1900×1100×700	1900×1100×850
Net weight		kg	170	236	282

Notes:

① Rated cooling capacity test conditions: indoor 27°C DB/19°C WB, outdoor 35°C DB; connection pipe length: 5 m, without height drop between units.

② Rated heating capacity test conditions: indoor 20°C DB, outdoor 7°C DB/6 °C WB; connection pipe length: 5 m, without height drop between units.

③ In the column of “Unit external static pressure”: The figure before “/” indicates the default external static pressure of unit before delivery, and the figures after indicate the adjustable static pressure range of unit.

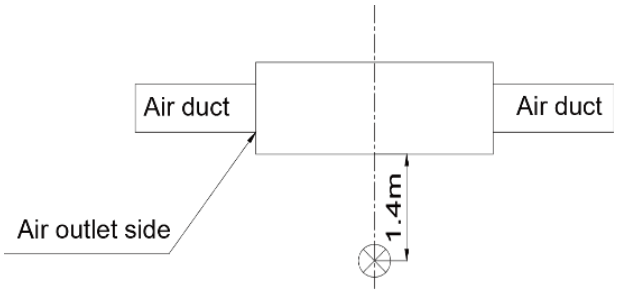

Transandient meter of sound level meter

3.16 AHU-KIT Type

Model				GMV-N36U/A-T		GMV-N71U/A-T			GMV-N140U/A-T		
Defaulted capacity of ex-factory	Capacity			36		71			140		
	Cooling		kW	3.6		7.1			14.0		
	Heating		kW	4.0		8.0			16.0		
Adjustable capacity	Capacity			28	36	45	56	71	90	112	140
	Cooling		kW	2.8	3.6	4.5	5.6	7.1	9.0	11.2	14.0
	Heating		kW	3.2	4.0	5.0	6.3	8.0	10.0	12.5	16.0
Power input			W	5.0		5.0			5.0		
Power Supply				220-240V 1 phase ~50Hz/208-230V 1 phase ~60Hz							
Size of connection pipe	AHU-KIT (ex-factory pipe size)		mm	Φ6.35	Φ6.35	Φ9.52	Φ9.52	Φ9.52	Φ9.52	Φ9.52	Φ9.52
	AHU	Liquid pipe	mm	Φ6.35	Φ6.35	Φ6.35	Φ9.52	Φ9.52	Φ9.52	Φ9.52	Φ9.52
		Gas pipe	mm	Φ9.52	Φ12.7	Φ12.7	Φ15.9	Φ15.9	Φ15.9	Φ15.9	Φ15.9
	Connection method			Brazing Connection		Brazing Connection			Brazing Connection		
Outline dimension (W×D×H)	EXV box		mm	203×326×85		203×326×85			203×326×85		
	Control box		mm	334×284×111		334×284×111			334×284×111		
Packing size(W×D×H)			mm	539×461×247		539×461×247			539×461×247		
Net weight			kg	8.6		8.6			8.6		

Model				GMV-N280U/A-T					GMV-N560U/A-T		
Defaulted capacity of ex-factory	Capacity			280					560		
	Cooling		kW	28.0					56.0		
	Heating		kW	31.5					63.0		
Adjustable capacity	Capacity			224	280	335	400	450	504	560	840
	Cooling		kW	22.4	28.0	33.5	40.0	45.0	50.4	56.0	84.0
	Heating		kW	25.0	31.5	37.5	45.0	50.00	56.5	63.0	94.5
Power input			W	5.0					5.0		
Power Supply				220-240V 1 phase ~50Hz/208-230V 1 phase ~60Hz							
Size of connection pipe	AHU-KIT (ex-factory pipe size)		mm	Φ9.52	Φ9.52	Φ9.52	Φ9.52	Φ9.52	Φ15.9	Φ15.9	Φ15.9
	AHU	Liquid pipe	mm	Φ9.52	Φ9.52	Φ12.7	Φ12.7	Φ12.7	Φ15.9	Φ15.9	Φ19.05
		Gas pipe	mm	Φ19.05	Φ22.2	Φ25.4	Φ25.4	Φ28.6	Φ28.6	Φ28.6	Φ31.8
	Connection method			Brazing Connection					Brazing Connection		
Outline dimension (W×D×H)	EXV box		mm	203×326×85					246×500×120		
	Control box		mm	334×284×111					334×284×111		
Packing size(W×D×H)			mm	539×461×247					759×645×180		
Net weight	kg			8.6					11.8		

Model(Combined)				GMV-N560U/A-T+ GMV-N140U/A-T	GMV-N560U/A-T+ GMV-N280U/A-T	GMV-N560U/A-T+ GMV-N560U/A-T	
Capacity			-	840+140	840+280	840+560	840+840
Cooling			kW	98	112	140	168
Heating			kW	110.5	126	157.5	189
Power input			W	5+5	5+5	5+5	
Power Supply				220-240V 1 phase ~50Hz/208-230V 1 phase ~60Hz			
Size of connection pipe	AHU	Liquid pipe	mm	Φ19.05	Φ19.05	Φ19.05	Φ19.05
		Gas pipe	mm	Φ38.1	Φ38.1	Φ41.3	Φ41.3
Outline dimension (W×D×H)	EXV box		mm	246×500×120+203×326×85	246×500×120+203×326×85	(246×500×120)×2	
	Control box		mm	(334×284×111)×2	(334×284×111)×2	(334×284×111)×2	
Net weight			kg	11.8+8.6	11.8+8.6	11.8+11.8	

Model				GMV-N36U/B-T		GMV-N71U/B-T			GMV-N140U/B-T		
Defaulted capacity of ex-factory		Capacity		36		71			140		
		Cooling	kW	3.6		7.1			14.0		
		Heating	kW	4.0		8.0			16.0		
Adjustable capacity		Capacity		28	36	45	56	71	90	112	140
		Cooling	kW	2.8	3.6	4.5	5.6	7.1	9.0	11.2	14.0
		Heating	kW	3.2	4.0	5.0	6.3	8.0	10.0	12.5	16.0
Power input			W	8.0		8.0			8.0		
Power Supply				220-240V 1 phase ~50Hz/208-230V 1 phase ~60Hz							
Size of connection pipe	AHU-KIT (ex-factory pipe size)		mm	Φ6.35	Φ6.35	Φ9.52	Φ9.52	Φ9.52	Φ9.52	Φ9.52	Φ9.52
	AHU	Liquid pipe	mm	Φ6.35	Φ6.35	Φ6.35	Φ9.52	Φ9.52	Φ9.52	Φ9.52	Φ9.52
		Gas pipe	mm	Φ9.52	Φ12.7	Φ12.7	Φ15.9	Φ15.9	Φ15.9	Φ15.9	Φ15.9
	Connection method			Brazing Connection		Brazing Connection			Brazing Connection		
Outline dimension (W×D×H)		EXV box	mm	203×326×85		203×326×85			203×326×85		
		Control box	mm	334×284×111		334×284×111			334×284×111		
Packing size(W×D×H)			mm	539×461×247		539×461×247			539×461×247		
Net weight			kg	9.5		10.0			10.0		

Model				GMV-N280U/B-T					GMV-N560U/B-T		
Defaulted capacity of ex-factory		Capacity		280					560		
		Cooling	kW	28.0					56.0		
		Heating	kW	31.5					63.0		
Adjustable capacity		Capacity		224	280	335	400	450	504	560	840
		Cooling	kW	22.4	28.0	33.5	40.0	45.0	50.4	56.0	84.0
		Heating	kW	25.0	31.5	37.5	45.0	50.0	56.5	63.0	94.5
Power input			W	8.0					8.0		
Power Supply				220-240V 1 phase ~50Hz/208-230V 1 phase ~60Hz							
Size of connection pipe	AHU-KIT (ex-factory pipe size)		mm	Φ9.52	Φ9.52	Φ9.52	Φ9.52	Φ9.52	Φ15.9	Φ15.9	Φ15.9
	AHU	Liquid pipe	mm	Φ9.52	Φ9.52	Φ12.7	Φ12.7	Φ12.7	Φ15.9	Φ15.9	Φ19.05
		Gas pipe	mm	Φ19.05	Φ22.2	Φ25.4	Φ25.4	Φ28.6	Φ28.6	Φ28.6	Φ31.8
	Connection method			Brazing Connection					Brazing Connection		
Outline dimension (W×D×H)		EXV box	mm	203×326×85					246×500×120		
		Control box	mm	334×284×111					334×284×111		
Packing size(W×D×H)			mm	539×461×247					759×645×180		
Net weight		kg		10.0					12.5		

Model(Combined)				GMV-N560U/B-T+ GMV-N140U/B-T	GMV-N560U/B-T+ GMV-N280U/B-T	GMV-N560U/B-T+ GMV-N560U/B-T	
Capacity			-	840+140	840+280	840+560	840+840
Cooling			kW	98	112	140	168
Heating			kW	110.5	126	157.5	189
Power input			W	8+8	8+8	8+8	
Power Supply				220-240V 1 phase ~50Hz/208-230V 1 phase ~60Hz			
Size of connection pipe	AHU	Liquid pipe	mm	Φ19.05	Φ19.05	Φ19.05	Φ19.05
		Gas pipe	mm	Φ38.1	Φ38.1	Φ41.3	Φ41.3
Outline dimension (W×D×H)	EXV box		mm	246×500×120+203 ×326×85	246×500×120+203 ×326×85	(246×500×120)×2	
	Control box		mm	(334×284×111)×2	(334×284×111)×2	(334×284×111)×2	
Net weight			kg	12.5+10.0	12.5+10.0	12.5+12.5	

Model				GMV-N36U/C-T		GMV-N71U/C-T			GMV-N140U/C-T		
Defaulted capacity of ex-factory	Capacity			36		71			140		
	Cooling		kW	3.6		7.1			14		
	Heating		kW	4		8			16		
Adjustable capacity	Capacity			28	36	45	56	71	90	112	140
	Cooling		kW	2.8	3.6	4.5	5.6	7.1	9	11.2	14
	Heating		kW	3.2	4	5	6.3	8	10	12.5	16
Power input			W	8		8			8		
Power Supply				220-240V 1 phase ~50Hz/208-230V 1 phase ~60Hz							
Size of connection pipe	AHU-KIT (ex-factory pipe size)		mm	Φ6.35	Φ6.35	Φ9.52	Φ9.52	Φ9.52	Φ9.52	Φ9.52	Φ9.52
	Air handling unit	Liquid pipe	mm	Φ6.35	Φ6.35	Φ6.35	Φ9.52	Φ9.52	Φ9.52	Φ9.52	Φ9.52
		Gas pipe	mm	Φ9.52	Φ12.7	Φ12.7	Φ15.9	Φ15.9	Φ15.9	Φ15.9	Φ15.9
	Connection method			Brazing Connection		Brazing Connection			Brazing Connection		
Outline dimension（W×D×H）	EXV box		mm	203×326×85		203×326×85			203×326×85		
	Control box		mm	334×284×111		334×284×111			334×284×111		
Packing size（W×D×H）			mm	539×461×247		539×461×247			539×461×247		
Net weight			kg	10.0		10.5			10.5		

Model				GMV-N280U/C-T					GMV-N560U/C-T		
Defaulted capacity of ex-factory	Capacity			280					560		
	Cooling		kW	28					56		
	Heating		kW	31.5					63		
Adjustable capacity	Capacity			224	280	335	400	450	504	560	840
	Cooling		kW	22.4	28	33.5	40	45	50.4	56	84
	Heating		kW	25	31.5	37.5	45	50	56.5	63	94.5
Power input			W	8					8		
Power Supply				220-240V 1 phase ~50Hz/208-230V 1 phase ~60Hz							
Size of connection pipe	AHU-KIT (ex-factory pipe size)		mm	Φ9.52	Φ9.52	Φ9.52	Φ9.52	Φ9.52	Φ15.9	Φ15.9	Φ15.9
	Air handling unit	Liquid pipe	mm	Φ9.52	Φ9.52	Φ12.7	Φ12.7	Φ12.7	Φ15.9	Φ15.9	Φ19.05
		Gas pipe	mm	Φ19.05	Φ22.2	Φ25.4	Φ25.4	Φ28.6	Φ28.6	Φ28.6	Φ31.8
	Connection method			Brazing Connection					Brazing Connection		
Outline dimension（W×D×H）	EXV box		mm	203×326×85					246×500×120		
	Control box		mm	334×284×111					334×284×111		
Packing size（W×D×H）			mm	539×461×247					759×645×180		
Net weight			kg	10.5					13.0		

Model(Combined)			GMV-N560U/C-T +GMV-N140U/C- T	GMV-N560U/C-T +GMV-N280U/C- T	GMV-N560U/C-T +GMV-N560U/C-T	
Capacity			840+140	840+280	840+560	840+840
Cooling	kW		98	112	140	168
Heating	kW		110.5	126	157.5	189
Power input	W		8+8	8+8	8+8	
Power Supply			220-240V 1 phase ~50Hz/208-230V 1 phase ~60Hz			
Size of connection pipe	Air handling unit	Liquid pipe	Φ19.05	Φ19.05	Φ19.05	Φ19.05
		Gas pipe	Φ38.1	Φ38.1	Φ41.3	Φ41.3
Outline dimension（W×D×H）	EXV box	mm	246×500×120 +203×326×85	246×500×120 +203×326×85	(246×500×120)×2	
	Control box	mm	(334×284×111)×2	(334×284×111)×2	(334×284×111)×2	
Net weight	kg		13.0+10.5	13.0+10.5	13.0+13.0	

Model(Combined)			GMV-N560U/C-T +GMV-N560U/C-T +GMV-N140U/C-T	GMV-N560U/C-T +GMV-N560U/C-T +GMV-N280U/C-T	GMV-N560U/C-T +GMV-N560U/C-T +GMV-N560U/C-T	
Capacity			840+840+140	840+840+280	840+840 +560	840+840 +840
Cooling	kW		182	196	224	252
Heating	kW		204.5	220.5	252	283.5
Power input	W		8+8+8	8+8+8	8+8+8	
Power Supply			220-240V 1 phase ~50Hz/208-230V 1 phase ~60Hz			
Size of connection pipe	Air handling unit	Liquid pipe	Φ19.05	Φ22.2	Φ22.2	Φ22.2
		Gas pipe	Φ41.3	Φ44.5	Φ44.5	Φ44.5
Outline dimension （W×D×H）	EXV box	mm	(246×500×120)×2 +203×326×85	(246×500×120)×2 +203×326×85	(246×500×120)×3	
	Control box	mm	(334×284×111)×3	(334×284×111)×3	(334×284×111)×3	
Net weight	kg		13.0+13.0+10.5	13.0+13.0+10.5	13.0+13.0+13.0	

3.17 Concealed Floor Standing Type

Model			GMV-ND22 ZA/A-T	GMV-ND28 ZA/A-T	GMV-ND36 ZA/A-T	GMV-ND45 ZA/A-T	GMV-ND56 ZA/A-T	GMV-ND63 ZA/A-T	GMV-ND71 ZA/A-T
Cooling capacity		kW	2.2	2.8	3.6	4.5	5.6	6.3	7.1
Heating capacity		kW	2.5	3.2	4.0	5.0	6.3	7.1	8.0
Air Volume		m³/h	450	450	550	650	900	900	1100
External Static Pressure		Pa	10/0~40	10/0~40	10/0~40	15/0~60	15/0~60	15/0~60	15/0~60
Cooling power input		W	35	35	43	45	80	80	90
Cooling current input		A	0.18	0.18	0.22	0.23	0.41	0.41	0.46
Heating power input		W	35	35	43	45	80	80	90
Heating current input		A	0.18	0.18	0.22	0.23	0.41	0.41	0.46
Minimum line current		A	0.2	0.2	0.3	0.3	0.5	0.5	0.5
Maximum fuse current		A	6	6	6	6	6	6	6
Sound pressure level		dB(A)	30	30	33	33	35	35	37
Power supply			220-240V 1 phase ~50Hz/208-230V 1 phase ~60Hz						
Pipe diameter	Liquid pipe	mm	Φ6.35	Φ6.35	Φ6.35	Φ6.35	Φ9.52	Φ9.52	Φ9.52
	Gas pipe	mm	Φ9.52	Φ9.52	Φ12.7	Φ12.7	Φ15.9	Φ15.9	Φ15.9
Drain pipe	External diameter × thickness	mm	Φ25×2.5	Φ25×2.5	Φ25×2.5	Φ25×2.5	Φ25×2.5	Φ25×2.5	Φ25×2.5
Outline Dimensions	W×D×H	mm	700×615 ×200	700×615 ×200	700×615 ×200	900×615 ×200	1100×615 ×200	1100×615 ×200	1100×615 ×200
Net weight		kg	23	23	23	27	32	32	32

Notes:

① Rated cooling capacity test conditions: indoor 27°C DB/19°C WB, outdoor 35°C DB; connection pipe length: 5m, without height drop between units.

② Rated heating capacity test conditions: indoor 20°C DB, outdoor 7°C DB/6 °C WB; connection pipe length: 5m, without height drop between units.

③ In the column of “Unit external static pressure”: The figure before “/” indicates the default external static pressure of unit before delivery, and the figures after indicate the adjustable static pressure range of unit.

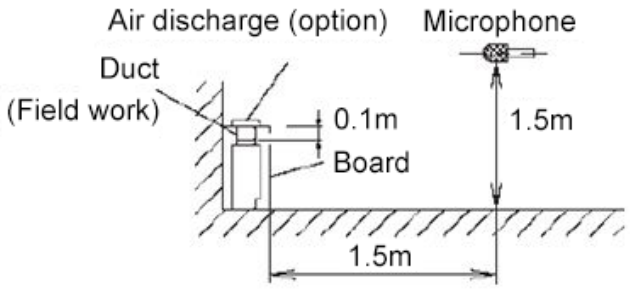

Transandient meter of sound level meter

3.18 360°Air Discharge Cassette

Model			GMV-ND22T/C-T	GMV-ND28T/C-T	GMV-ND36T/C-T	GMV-ND45T/C-T
Cooling capacity		kW	2.2	2.8	3.6	4.5
Heating capacity		kW	2.5	3.2	4	5
Air volume(H/M/L)		m³/h	800/700/600	800/700/600	800/700/600	800/700/600
Cooling power input		W	26	26	26	26
Cooling current input		A	0.2	0.2	0.2	0.2
Heating power input		W	22	22	22	22
Heating current input		A	0.2	0.2	0.2	0.2
Minimum line current		A	0.50	0.50	0.50	0.50
Maximum fuse current		A	6	6	6	6
Sound Pressure Level (H/M/L)		dB(A)	33/30/28	33/30/28	33/30/28	34/30/28
Power supply			220-240V 1 phase ~50Hz/208-230V 1 phase ~60Hz			
Piping interface	Liquid pipe	mm	Φ6.35	Φ6.35	Φ6.35	Φ6.35
	Gas pipe	mm	Φ9.52	Φ9.52	Φ12.7	Φ12.7
Drain pipe	External diameter×Thickness	mm	Φ25×2.5	Φ25×2.5	Φ25×2.5	Φ25×2.5
Main body dimensions	W×D×H	mm	840×840×240	840×840×240	840×840×240	840×840×240
Panel dimensions	W×D×H	mm	950×950×65	950×950×65	950×950×65	950×950×65
Net weight	Main body	kg	27	27	27	27
	Panel	kg	6	6	6	6
Panel model		/	TF06	TF06	TF06	TF06
Loading Quantity	40’ GP	set	120	120	120	120
	40’ HQ	set	140	140	140	140

Model		GMV-ND50T/C-T	GMV-ND56T/C-T	GMV-ND63T/C-T	GMV-ND71T/C-T
Cooling capacity	kW	5	5.6	6.3	7.1
Heating capacity	kW	5.6	6.3	7.1	8
Air volume(H/M/L)	m³/h	900/800/700	950/850/750	1150/950/850	1150/950/850
Cooling power input	W	28	35	60	60
Cooling current input	A	0.2	0.2	0.4	0.4
Heating power input	W	25	35	56	56
Heating current input	A	0.2	0.2	0.4	0.4
Minimum line current	A	0.50	0.50	0.55	0.55

Model			GMV-ND50T/C-T	GMV-ND56T/C-T	GMV-ND63T/C-T	GMV-ND71T/C-T
Maximum fuse current		A	6	6	6	6
Sound Pressure Level (H/M/L)		dB(A)	35/32/29	37/33/30	37/34/31	37/34/31
Power supply			220-240V 1 phase ~50Hz/208-230V 1 phase ~60Hz			
Piping interface	Liquid pipe	mm	Φ6.35	Φ9.52	Φ9.52	Φ9.52
	Gas pipe	mm	Φ12.7	Φ15.9	Φ15.9	Φ15.9
Drain pipe	External diameter×Thickness	mm	φ25×2.5	φ25×2.5	Φ25×2.5	Φ25×2.5
Main body dimensions	W×D×H	mm	840×840×240	840×840×240	840×840×240	840×840×240
Panel dimensions	W×D×H	mm	950×950×65	950×950×65	950×950×65	950×950×65
Net weight	Main body	kg	28	28	28	28
	Panel	kg	6	6	6	6
Panel model		/	TF06	TF06	TF06	TF06
Loading Quantity	40’ GP	set	120	120	120	120
	40’ HQ	set	140	140	140	140

Model			GMV-ND80T/C-T	GMV-ND90T/C-T	GMV-ND100T/C-T	GMV-ND112T/C-T
Cooling capacity		kW	8	9	10	11.2
Heating capacity		kW	9	10	11.2	12.5
Air volume(H/M/L)		m^3/h	1250/1000/900	1250/1000/900	1250/1000/900	1650/1300/1100
Cooling power input		W	80	80	80	115
Cooling current input		A	0.4	0.4	0.4	0.6
Heating power input		W	76	76	76	111
Heating current input		A	0.4	0.4	0.4	0.6
Minimum line current		A	0.55	0.55	0.55	0.98
Maximum fuse current		A	6	6	6	6
Sound Pressure Level (H/M/L)		dB(A)	39/37/34	39/37/34	39/37/34	43/41/39
Power supply			220-240V 1 phase ~50Hz/208-230V 1 phase ~60Hz			
Piping interface	Liquid pipe	mm	Φ9.52	Φ9.52	Φ9.52	Φ9.52
	Gas pipe	mm	Φ15.9	Φ15.9	Φ15.9	Φ15.9
Drain pipe	External diameter×Thickness	mm	Φ25×2.5	Φ25×2.5	Φ25×2.5	Φ25×2.5
Main body dimensions	W×D×H	mm	840×840×240	840×840×240	840×840×240	840×840×290
Panel dimensions	W×D×H	mm	950×950×65	950×950×65	950×950×65	950×950×65
Net weight	Main body	kg	29	29	29	33
	Panel	kg	6	6	6	6
Panel model		/	TF06	TF06	TF06	TF06
Loading Quantity	40’ GP	set	120	120	120	120
	40’ HQ	set	140	140	140	140

Model			GMV-ND125T/C-T	GMV-ND140T/C-T	GMV-ND160T/C-T
Cooling capacity		kW	12.5	14	16
Heating capacity		kW	14	16	18
Air volume(H/M/L)		m³/h	1650/1300/1100	1650/1300/1100	2000/1800/1430
Cooling power input		W	115	115	170
Cooling current input		A	0.6	0.6	1.2
Heating power input		W	111	111	170
Heating current input		A	0.6	0.6	1.2
Minimum line current		A	0.98	0.98	1.2
Maximum fuse current		A	6	6	6
Sound Pressure Level (H/M/L)		dB(A)	43/41/39	43/41/39	51/48/42
Power supply			220-240V 1 phase ~50Hz/208-230V 1 phase ~60Hz		
Piping interface	Liquid pipe	mm	Φ9.52	Φ9.52	Φ9.52
	Gas pipe	mm	Φ15.9	Φ15.9	Φ19.05
Drain pipe	External diameter×Thickness	mm	Φ25×2.5	Φ25×2.5	Φ25×2.5
Main body dimensions	W×D×H	mm	840×840×290	840×840×290	840×840×290
Panel dimensions	W×D×H	mm	950×950×65	950×950×65	950×950×65
Net weight	Main body	kg	33	33	36
	Panel	kg	6	6	6
Panel model		/	TF06	TF06	TF06
Loading Quantity	40’ GP	set	120	120	120
	40’ HQ	set	140	140	140

Model			GMV-ND22T/C1-T	GMV-ND28T/C1-T	GMV-ND36T/C1-T	GMV-ND45T/C1-T
Cooling capacity		kW	2.2	2.8	3.6	4.5
Heating capacity		kW	2.5	3.2	4	5
Air volume(H/M/L)		m³/h	780/690/480	800/700/500	800/700/500	800/700/500
Cooling power input		W	24	24	24	24
Cooling current input		A	0.21	0.21	0.21	0.21
Heating power input		W	24	24	24	24
Heating current input		A	0.21	0.21	0.21	0.21
Minimum line current		A	0.21	0.21	0.21	0.21
Maximum fuse current		A	6	6	6	6
Sound Pressure Level (H/M/L)		dB(A)	34/32/29	35/32/31	35/32/31	35/32/31
Power supply			220-240V 1 phase ~50Hz/208-230V 1 phase ~60Hz			
Piping interface	Liquid pipe	mm	Φ6.35	Φ6.35	Φ6.35	Φ6.35
	Gas pipe	mm	Φ9.52	Φ9.52	Φ12.7	Φ12.7
Drain pipe	External diameter×Thickness	mm	Φ25×2.5	Φ25×2.5	Φ25×2.5	Φ25×2.5
Main body dimensions	W×D×H	mm	840×840×200	840×840×200	840×840×200	840×840×200
Panel dimensions	W×D×H	mm	943×923×245	943×923×245	943×923×245	943×923×245
Net weight	Main body	kg	21	21	21	21
	Panel	kg	6	6	6	6
Panel model		/	TF06	TF06	TF06	TF06
Loading Quantity	40’ GP	set	156	156	156	156
	40’ HQ	set	176	176	176	176

Model			GMV-ND50T/C1-T
Cooling capacity		kW	5
Heating capacity		kW	5.6
Air volume(H/M/L)		m³/h	1000/800/700
Cooling power input		W	45
Cooling current input		A	0.37
Heating power input		W	45
Heating current input		A	0.37
Minimum line current		A	0.37
Maximum fuse current		A	6
Sound Pressure Level (H/M/L)		dB(A)	41/36/32
Power supply			220-240V 1 phase ~50Hz/208-230V 1 phase ~60Hz
Piping interface	Liquid pipe	mm	Φ6.35
	Gas pipe	mm	Φ12.7
Drain pipe	External diameter×Thickness	mm	φ25×2.5
Main body dimensions	W×D×H	mm	840×840×200
Panel dimensions	W×D×H	mm	943×923×245
Net weight	Main body	kg	21
	Panel	kg	6
Panel model		/	TF06
Loading Quantity	40’ GP	set	156
	40’ HQ	set	176

Model			GMV-ND22T/D1-T	GMV-ND28T/D1-T	GMV-ND36T/D1-T	GMV-ND45T/D1-T
Cooling capacity		kW	2.2	2.8	3.6	4.5
Heating capacity		kW	2.5	3.2	4.0	5.0
Air volume(H/M/L)		m³/h	800/700/600	800/700/600	800/700/600	900/800/700
Cooling power input		W	40	40	40	50
Cooling current input		A	0.35	0.35	0.35	0.44
Heating power input		W	40	40	40	50
Heating current input		A	0.35	0.35	0.35	0.44
Minimum line current		A	0.35	0.35	0.35	0.44
Maximum fuse current		A	6	6	6	6
Sound Pressure Level (H/M/L)		dB(A)	32/29/27	32/29/27	32/29/27	35/30/27
Power supply			220-240V 1 phase ~50Hz/208-230V 1 phase ~60Hz			
Piping interface	Liquid pipe	mm	Φ6.35	Φ6.35	Φ6.35	Φ6.35
	Gas pipe	mm	Φ9.52	Φ9.52	Φ12.7	Φ12.7
Drain pipe	External diameter×Thickness	mm	Φ25×2.5	Φ25×2.5	Φ25×2.5	Φ25×2.5
Main body dimensions	W×D×H	mm	840×840×200	840×840×200	840×840×200	840×840×200
Panel dimensions	W×D×H	mm	950×950×65	950×950×65	950×950×65	950×950×65
Net weight	Main body	kg	23	23	23	23
	Panel	kg	6	6	6	6
Panel model		/	TF06	TF06	TF06	TF06

Model			GMV-ND22T/D1-T	GMV-ND28T/D1-T	GMV-ND36T/D1-T	GMV-ND45T/D1-T
Loading Quantity	40’ GP	set	152	152	152	152
	40’ HQ	set	169	169	169	169

Model			GMV-ND50T/D1-T	GMV-ND56T/D1-T	GMV-ND63T/D1-T	GMV-ND71T/D1-T
Cooling capacity		kW	5	5.6	6.3	7.1
Heating capacity		kW	5.6	6.3	7.1	8
Air volume(H/M/L)		m³/h	900/800/700	1100/935/850	1100/935/850	1100/935/850
Cooling power input		W	50	60	60	60
Cooling current input		A	0.44	0.49	0.49	0.49
Heating power input		W	50	60	60	60
Heating current input		A	0.44	0.49	0.49	0.49
Minimum line current		A	0.44	0.49	0.49	0.49
Maximum fuse current		A	6	6	6	6
Sound Pressure Level (H/M/L)		dB(A)	35/30/27	37/35/32	37/35/32	37/35/32
Power supply			220-240V 1 phase ~50Hz/208-230V 1 phase ~60Hz			
Piping interface	Liquid pipe	mm	Φ6.35	Φ9.52	Φ9.52	Φ9.52
	Gas pipe	mm	Φ12.7	Φ15.9	Φ15.9	Φ15.9
Drain pipe	External diameter×Thickness	mm	φ25×2.5	φ25×2.5	Φ25×2.5	Φ25×2.5
Main body dimensions	W×D×H	mm	840×840×200	840×840×200	840×840×200	840×840×200
Panel dimensions	W×D×H	mm	950×950×65	950×950×65	950×950×65	950×950×65
Net weight	Main body	kg	23	25	25	25
	Panel	kg	6	6	6	6
Panel model		/	TF06	TF06	TF06	TF06
Loading Quantity	40’ GP	set	152	152	152	152
	40’ HQ	set	169	169	169	169

Model			GMV-ND80T/D1-T	GMV-ND90T/D1-T	GMV-ND100T/D1-T	GMV-ND112T/D1-T
Cooling capacity		kW	8	9	10	11.2
Heating capacity		kW	9	10	11.2	12.5
Air volume(H/M/L)		m³/h	1400/1000/900	1400/1000/900	1450/1200/1000	1450/1200/1000
Cooling power input		W	75	75	100	100
Cooling current input		A	0.60	0.60	0.76	0.76
Heating power input		W	75	75	100	100
Heating current input		A	0.60	0.60	0.76	0.76
Minimum line current		A	0.60	0.60	0.76	0.76
Maximum fuse current		A	6	6	6	6
Sound Pressure Level (H/M/L)		dB(A)	40/36/31	40/36/31	42/39/35	42/39/35
Power supply			220-240V 1 phase ~50Hz/208-230V 1 phase ~60Hz			
Piping interface	Liquid pipe	mm	Φ9.52	Φ9.52	Φ9.52	Φ9.52
	Gas pipe	mm	Φ15.9	Φ15.9	Φ15.9	Φ15.9
Drain pipe	External diameter×Thickness	mm	Φ25×2.5	Φ25×2.5	Φ25×2.5	Φ25×2.5
Main body dimensions	W×D×H	mm	840×840×240	840×840×240	840×840×240	840×840×240

Model			GMV-ND80T/D1-T	GMV-ND90T/D1-T	GMV-ND100T/D1-T	GMV-ND112T/D1-T
Panel dimensions	W×D×H	mm	950×950×65	950×950×65	950×950×65	950×950×65
Net weight	Main body	kg	27	27	27	27
	Panel	kg	6	6	6	6
Panel model		/	TF06	TF06	TF06	TF06
Loading Quantity	40’ GP	set	139	139	139	139
	40’ HQ	set	157	157	157	157

Model			GMV-ND125T/D1-T	GMV-ND140T/D1-T
Cooling capacity		kW	12.5	14
Heating capacity		kW	14	16
Air volume(H/M/L)		m³/h	1800/1450/1150	1800/1450/1150
Cooling power input		W	160	160
Cooling current input		A	0.85	0.85
Heating power input		W	160	160
Heating current input		A	0.85	0.85
Minimum line current		A	0.85	0.85
Maximum fuse current		A	6	6
Sound Pressure Level (H/M/L)		dB(A)	46/41/35	46/41/35
Power supply			220-240V 1 phase ~50Hz/208-230V 1 phase ~60Hz	
Piping interface	Liquid pipe	mm	Φ9.52	Φ9.52
	Gas pipe	mm	Φ15.9	Φ15.9
Drain pipe	External diameter×Thickness	mm	Φ25×2.5	Φ25×2.5
Main body dimensions	W×D×H	mm	840×840×290	840×840×290
Panel dimensions	W×D×H	mm	950×950×65	950×950×65
Net weight	Main body	kg	29.5	29.5
	Panel	kg	6	6
Panel model		/	TF06	TF06
Loading Quantity	40’ GP	set	117	117
	40’ HQ	set	135	135

Notes:

① Rated cooling capacity test conditions: indoor 27°C DB/19°C WB, outdoor 35°C DB; connection pipe length: 5 m, without height drop between units.

② Rated heating capacity test conditions: indoor 20°C DB, outdoor 7°C DB/6 °C WB; connection pipe length: 5 m, without height drop between units.

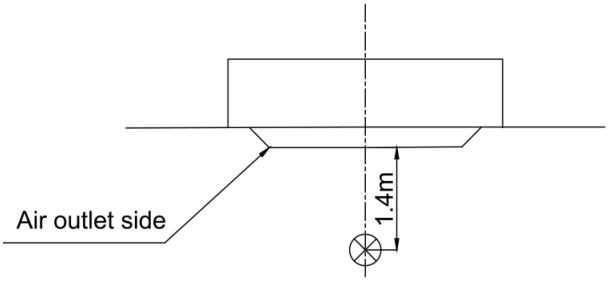

Transandient meter of sound level meter

3.19 Heat Storage Module

Model			XRZ180L/A-T
power input		W	5
current input		A	0.05
Maximum fuse current		A	6
Power supply			220-240V 1 phase ~50Hz/208-230V 1 phase ~60Hz
Piping interface	Liquid pipe	mm	Φ6.35
	Gas pipe	mm	Φ12.7
Outline Dimensions (W×D×H)		mm	730×450×220
Net weight		kg	31.5

3.20 High Static Pressure Duct Type Indoor Unit

Model			GMV-ND22P HS/D-T	GMV-ND25P HS/D-T	GMV-ND28P HS/D-T	GMV-ND32P HS/D-T	GMV-ND36P HS/D-T	GMV-ND40P HS/D-T
Cooling capacity		kW	2.2	2.5	2.8	3.2	3.6	4.0
Heating capacity		kW	2.5	2.8	3.2	3.6	4.0	4.5
Air volume		m³/h	550	550	550	600	600	850
External Static		Pa	50/0~80	50/0~80	50/0~80	50/0~80	50/0~80	50/0~80
Cooling power input		W	50	50	50	50	50	100
Cooling current input		A	0.4	0.4	0.4	0.4	0.4	0.8
Heating power input		W	50	50	50	50	50	100
Heating current input		A	0.4	0.4	0.4	0.4	0.4	0.8
Sound pressure level		dB(A)	35	35	35	36	36	40
Power supply			220-240V ~50Hz & 208-230V ~60Hz					
Piping interface	Liquid pipe	mm	Φ6.35	Φ6.35	Φ6.35	Φ6.35	Φ6.35	Φ6.35
	Gas pipe	mm	Φ9.52	Φ9.52	Φ9.52	Φ12.7	Φ12.7	Φ12.7
Drain pipe	External diameter × Thickness	mm	Φ25×2.5	Φ25×2.5	Φ25×2.5	Φ25×2.5	Φ25×2.5	Φ25×2.5
Outline dimensions	W×D×H	mm	700×700×300	700×700×300	700×700×300	700×700×300	700×700×300	700×700×300
Net weight		kg	30.5	30.5	30.5	30.5	30.5	31.5

Model			GMV-ND45P HS/D-T	GMV-ND50P HS/D-T	GMV-ND56P HS/D-T	GMV-ND63P HS/D-T	GMV-ND71P HS/D-T	GMV-ND80P HS/D-T
Cooling capacity		kW	4.5	5.0	5.6	6.3	7.1	8.0
Heating capacity		kW	5.0	5.6	6.3	7.1	8.0	9.0
Air volume		m³/h	850	850	1000	1000	1250	1250
External Static		Pa	50/0~80	50/0~80	90/0~200	90/0~200	90/0~200	90/0~200
Cooling power input		W	100	100	105	105	110	110
Cooling current input		A	0.8	0.8	0.8	0.8	0.9	0.9
Heating power input		W	100	100	105	105	110	110
Heating current input		A	0.8	0.8	0.8	0.8	0.9	0.9
Sound pressure level		dB(A)	40	40	40	40	40	40
Power supply			220-240V ~50Hz & 208-230V ~60Hz					
Piping interface	Liquid pipe	mm	Φ6.35	Φ6.35	Φ9.52	Φ9.52	Φ9.52	Φ9.52
	Gas pipe	mm	Φ12.7	Φ12.7	Φ15.9	Φ15.9	Φ15.9	Φ15.9

Model			GMV-ND45PHS/D-T	GMV-ND50PHS/D-T	GMV-ND56PHS/D-T	GMV-ND63PHS/D-T	GMV-ND71PHS/D-T	GMV-ND80PHS/D-T
Drain pipe	External diameter × Thickness	mm	Φ25×2.5	Φ25×2.5	Φ25×2.5	Φ25×2.5	Φ25×2.5	Φ25×2.5
Outline dimensions	W×D×H	mm	700×700×300	700×700×300	1000×700×300	1000×700×300	1000×700×300	1000×700×300
Net weight		kg	31.5	31.5	40.5	40.5	41	41

Model			GMV-ND90PHS/D-T	GMV-ND100PHS/D-T	GMV-ND112PHS/D-T	GMV-ND125PHS/D-T	GMV-ND140PHS/D-T	GMV-ND160PHS/D-T
Cooling capacity		kW	9.0	10.0	11.2	12.5	14.0	16.0
Heating capacity		kW	10.0	11.2	12.5	14.0	16.0	18.0
Air volume		m³/h	1800	1800	2000	2000	2350	2500
External Static		Pa	90/0~200	90/0~200	90/0~200	90/0~200	90/0~200	90/0~200
Cooling power input		W	170	170	170	170	240	240
Cooling current input		A	1.4	1.4	1.4	1.4	1.8	1.8
Heating power input		W	170	170	170	170	240	240
Heating current input		A	1.4	1.4	1.4	1.4	1.8	1.8
Sound pressure level		dB(A)	42	42	43	44	44	45
Power supply			220-240V ~50Hz & 208-230V ~60Hz					
Piping interface	Liquid pipe	mm	Φ9.52	Φ9.52	Φ9.52	Φ9.52	Φ9.52	Φ9.52
	Gas pipe	mm	Φ15.9	Φ15.9	Φ15.9	Φ15.9	Φ15.9	Φ19.05
Drain pipe	External diameter × Thickness	mm	Φ25×2.5	Φ25×2.5	Φ25×2.5	Φ25×2.5	Φ25×2.5	Φ25×2.5
Outline dimensions	W×D×H	mm	1400×700×300	1400×700×300	1400×700×300	1400×700×300	1400×700×300	1400×700×300
Net weight		kg	54	54	54	54	54.5	54.5

Model			GMV-ND180PHS/D-T
Cooling capacity		kW	18.0
Heating capacity		kW	20.0
Air Volume		m³/h	3000
External Static Pressure		Pa	90/0~170
Cooling power input		W	350
Cooling current input		A	2.0
Heating power input		W	350
Heating current input		A	2.0
Minimum line current		A	3.39
Maximum fuse current		A	6
Sound pressure level		dB(A)	49
Power supply			220-240V 1 phase ~50Hz/208-230V 1 phase ~60Hz
Pipe diameter	Liquid pipe	mm	Φ9.52
	Gas pipe	mm	Φ19.05
Drain pipe	External diameter ×thickness	mm	Φ25×2.5
Outline Dimensions	W×D×H	mm	1400×700×300
Net weight		kg	58

CONTROL

1 Operation Flowchart

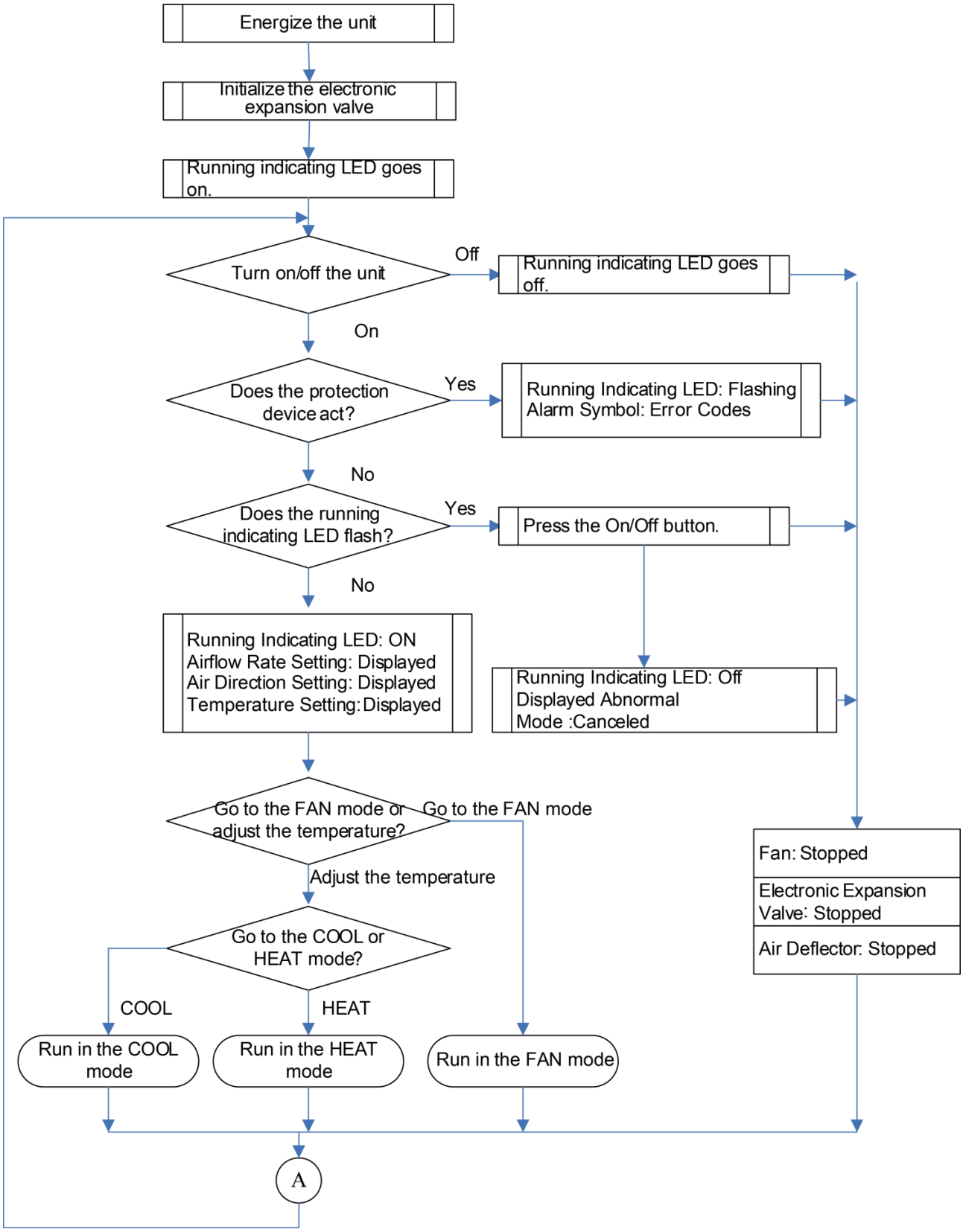

2 Wired Controller

2.1 Control Panel

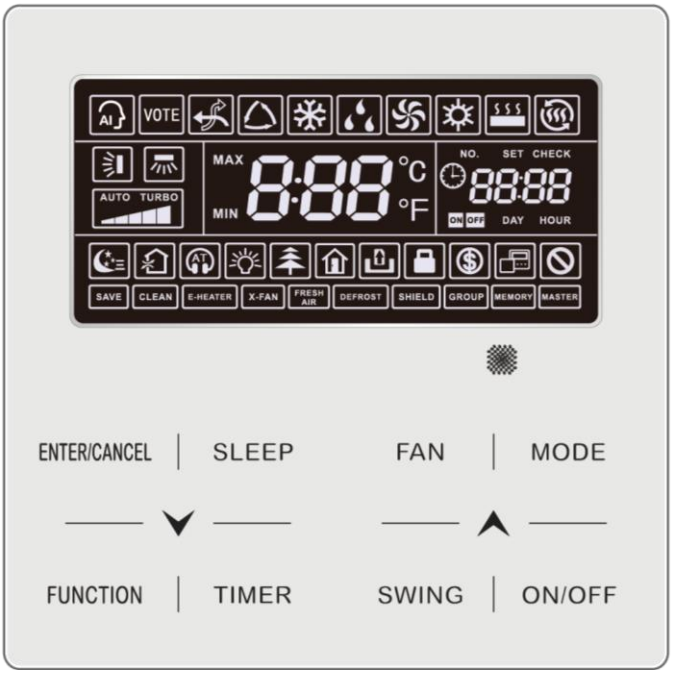

Fig.2.1 Appearance of wired controller

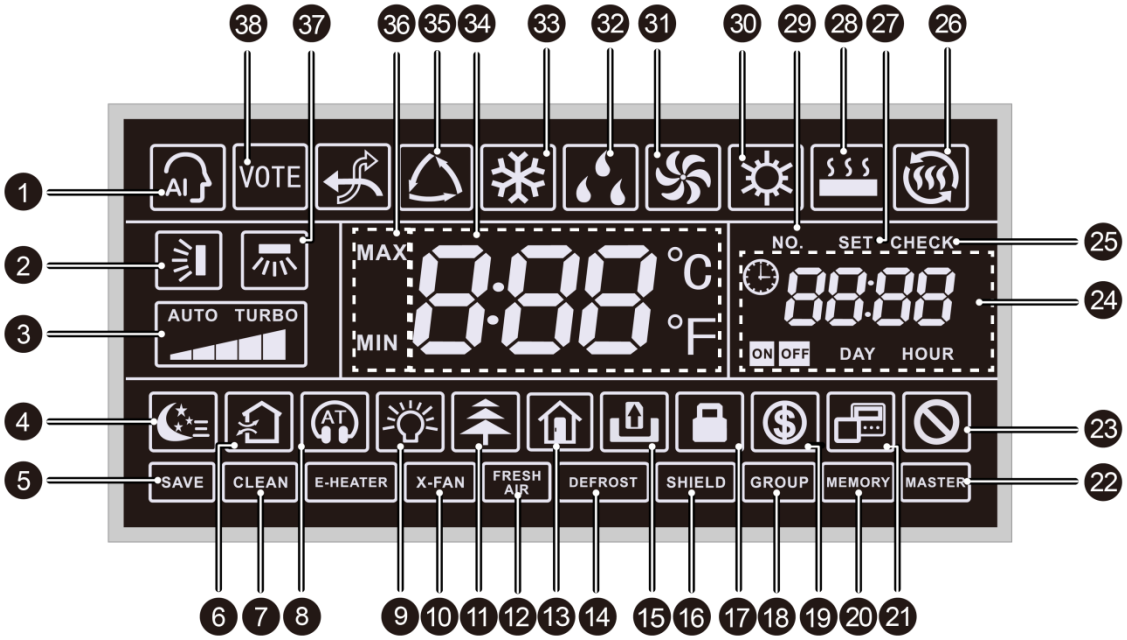

Fig.2.2 LED graphics of wired controller

Table 2.1 LED display instruction

No.	Symbols	Instructions
1	AI	As for the outdoor unit with AI function, once AI function is turned on, AI icon is displayed.
2		Up and down swing function.
3	AUTO TURBO	Current set fan speed (including auto, low speed, medium-low speed, medium speed, medium-high speed, high speedand turbo seven status).
4		Sleep status.
5	SAVE	Outdoor unit operates under Save mode/upper limit of system capacitor less 100%/remote Save status.
6	*	Air status, Indoor unit optional function.
7	CLEAN	Remind to clean the filter.
8	AT	Quiet status (including Quiet and Auto Quiet two status).
9		Light On/Off function.
10	X-FAN	X-fan function.
11	*	Health function, Indoor unit optional function.
12	FRESH AIR *	Fresh air control function of AHU-KIT.
13		Absence function.
14	DEFROST	Outdoor unit defrosting status.
15		Gate-control function.
16	SHIELD	Shielding status.
17		Child Lock status.
18	GROUP	One wired controller controls multiple indoor units.
19		Save status of indoor unit.
20	MEMORY	Memory status (The indoor unit resumes the original setting state after power failure and then power recovery).
21		It indicates the current wired controller is the slave wired controller (address of wired controller is 02).
22	MASTER	Current wired controller connects master indoor unit.
23		Invalid operation.
24	88:88 ON OFF DAY HOUR	Timer zone:Display system clock and timer status.
25	CHECK	Display "CHECK" icon under parameter view interface.
26	*	Space Heating mode.
27	SET	Display "SET" icon under parameter setting interface.
28	*	Floor Heating mode (When Heating and Floor Heating simultaneously shows up, it indicates 3D Heating is activated).

No.	Symbols	Instructions
29	NO.	When inquiring or setting project number of indoor unit, it displays "NO." icon.
30		Heating mode.
31		Fan mode.
32		Dry mode.
33		Cooling mode.
34	8:88 °C °F	It shows the setting temperature value(In case the wired controller is controlling a Fresh Air Indoor Unit, then the temperature zone will display FAP).
35		Auto mode (Under Auto mode, the indoor units will automatically select their operating mode as per the temperature change so as to make the ambient comfortable).
36	MAX MIN	It's valid under Save mode and displays during setting process. Temperature lower limit for Cooling: Limit the minimum temperature value under Cooling or Dry mode. Temperature upper limit for Heating: Limit the maximum temperature value under Heating, Space Heating or 3D Heating mode.
37	*	Left and right swing function.
38	VOTE	Indicates that the current system mode priority is voting mode.
NOTE: When wired controller is connected with different indoor units, some functions will be different.		

Button Graphics

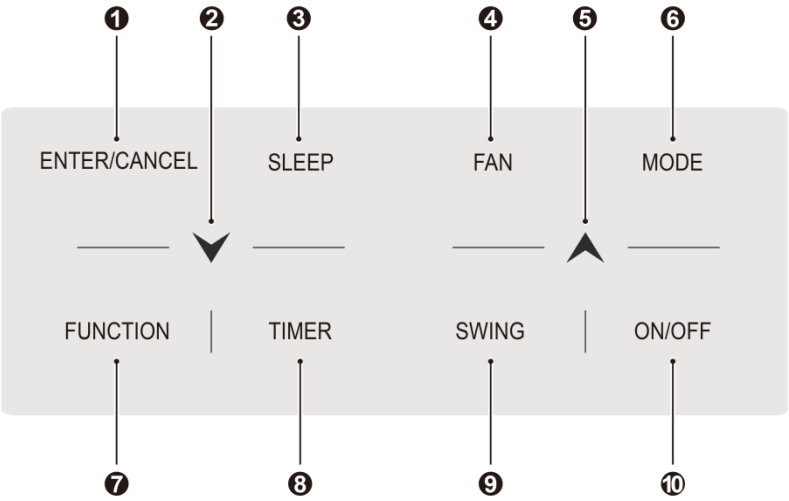

Fig.2.3 Button graphics

Table 2.2 Function instruction of buttons

No.	Buttons	Instructions
1	ENTER/CANCEL	Select and cancel function.
2	⮟	(1) Set operating temperature of indoor unit. (2) Set Timer. (3) Switch Quiet mode, Air grade, Clean grade, set upper and lower temperature limit under Save mode. (4) Set and inquiry parameter.
5	⮝	
3	SLEEP	Set Sleep mode.
4	FAN	Switch among auto, low speed, low-medium speed, medium speed, medium-high speed, high speed and turbo status.
6	MODE	Switch Auto,Cooling, Dry, Fan, Heating, Floor Heating, 3D Heating and Space Heating modes for indoor unit. (Note: The Floor Heating, 3D Heating and Space Heating function icon will show up when the unit has those functions) .
7	FUNCTION	Switch among Air, Quiet, Light, Health, Absence, Clean, and X-fan functions.
8	TIMER	Timer setting.
9	SWING	Set up and down swing status.
10	ON/OFF	Indoor unit On/Off.
2+5	⮝+⮟	Simultaneously press “⮝” and “⮟” for 5s to enter or cancel the Child Lock function.

2.2 Installation and Removal

2.2.1 Installation dimensions

Uint：mm

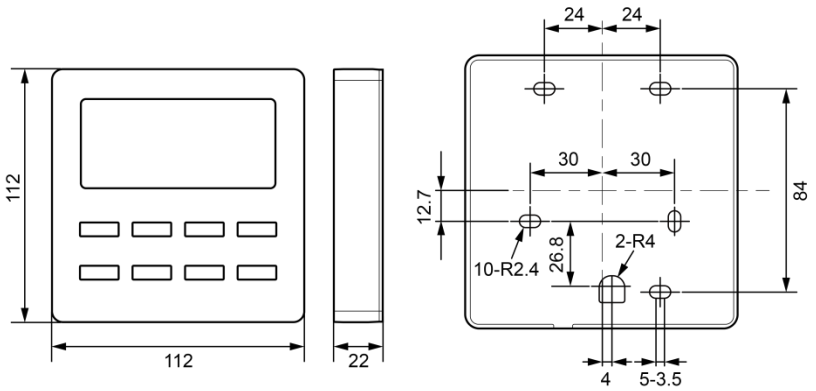

Fig.2.4 Installation dimensions

2.2.2 Installation method

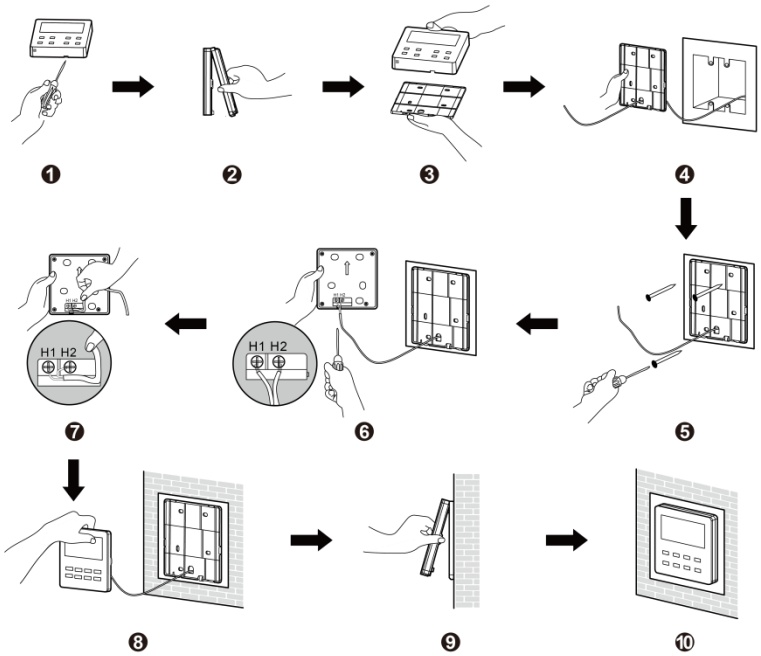

Fig.2.5 Installation of Wired Controller

Above is a simple installation method of wired controller. Please pay attention to the following:

(1) Before installation, please cut off the power for indoor unit.

(2) Pull out the two-core twisted pair from the installation hole on wall, and then pull this wire through the "Ω" shape hole at the rear side of Soleplate of wired controller.

(3) Stick the bottom plate of wired controller on the wall and then use Self-tapping Screw ST3.9×25 MA or Screw M4×25 to fix Soleplate and installation hole on wall together.

(4) Connect two-core twisted pair to H1 and H2 wiring column and then fix the screws.

(5) Tidy up the lines in slot on the back of the panel, and then bundle the front panel of wired controller to its soleplate and the installation is completed.

NOTE: If the wire size of the selected communication line is too large, you can peel some sheath layer of communication wire to satisfy installation requirements.

2.2.3 Removal method

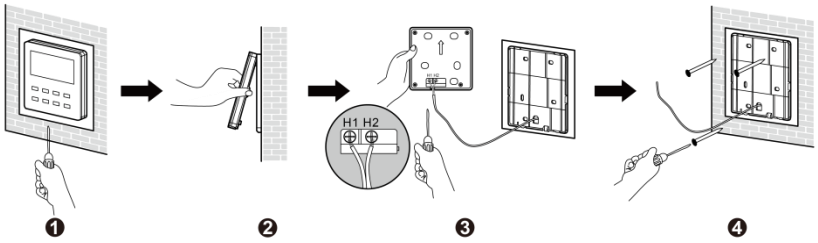

Fig.2.6 Removal of Wired Controller

2.2.4 Connection of communication cord

There are 4 ways to connect wired controller with indoor units' network:

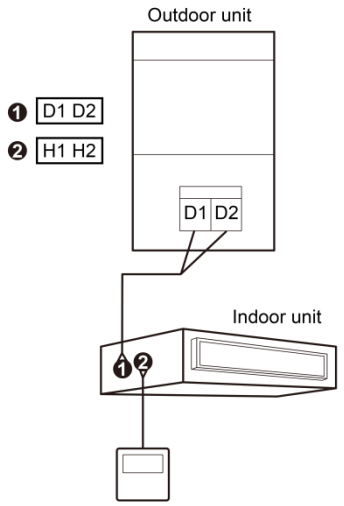

Fig.2.7 One wired controller controls one indoor unit

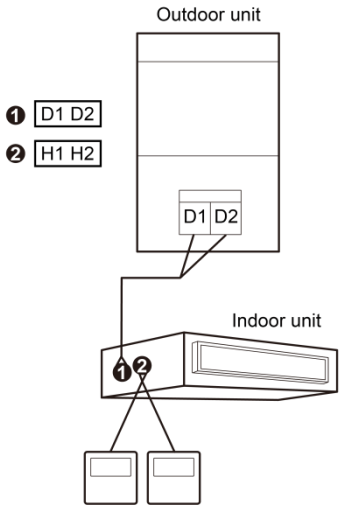

Fig.2.8 Two wired controllers control one indoor unit

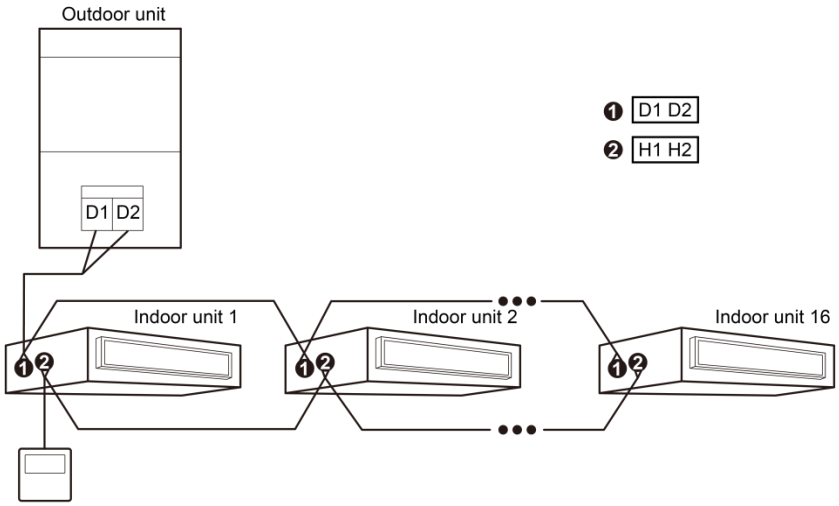

Fig.2.9 One wired controller controls multiple indoor units simultaneously

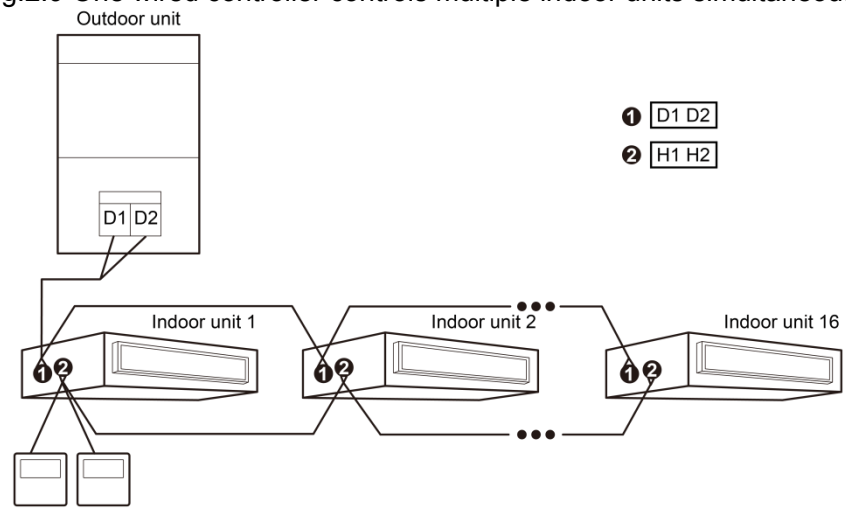

Fig.2.10 Two wired controllers control multiple indoor units simultaneously

Note:

Floor standing indoor unit only applicable to Fig.2.7.

3 Remote Controller

3.1 Remote Controller YAP1F

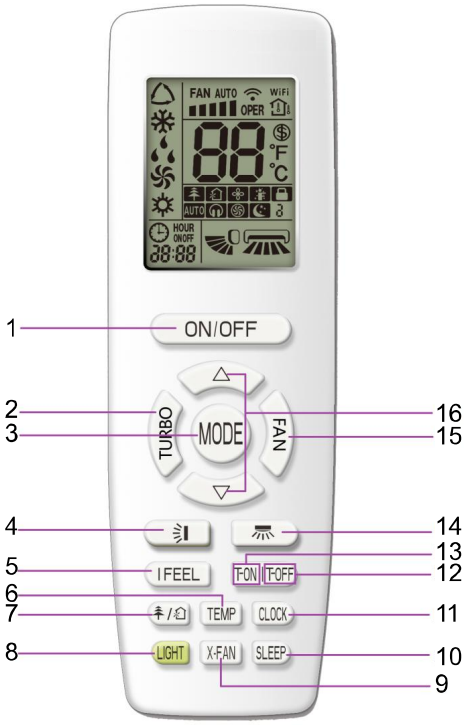

Button name and function introduction

No.	Button name	Function
1	ON/OFF	Turn on or turn off the unit
2	TURBO	Set turbo function
3	MODE	Set operation mode
4		Set up&down swing status
5	I FEEL	Set I FEEL function
6	TEMP	Switch temperature displaying type on the unit's display
7		Set health function and air function
8	LIGHT	Set light function
9	X-FAN	Set X-FAN function
10	SLEEP	Set sleep function
11	CLOCK	Set clock of the system
12	TOFF	Set timer off function
13	TON	Set timer on function
14		Set left&right swing status
15	FAN	Set fan speed
16	△/▽	Set temperature and time

4 Panel Display

4.1 Control Panel

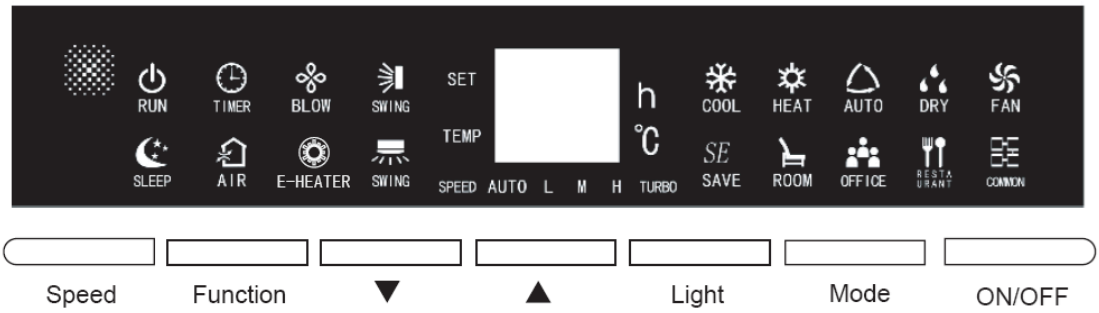

Notes:

"AIR" function is an optional function of indoor unit, for the unit without such function, this function is invalid; "E-HEATER", "ROOM", "OFFICE", "RESTAURANT", "COMMON" are obligate functions of indoor unit that cannot be set.

4.2 Operational Instruction

4.2.1 Start up and close down the unit

Press "ON/OFF" button to start up the unit. Press "ON/OFF" button to close down the unit.

4.2.2 Mode Setting

Under power-on status, each time press "Mode" button, the mode will be switched according to the following order circularly:

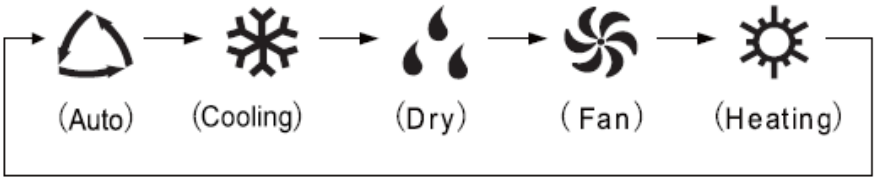

Notes:

① Only the master indoor unit can set auto mode;

② Under auto mode, if the indoor unit is in auto cooling, the "△"and"❄" icons are on; if the indoor unit is in auto heating, the "△"and"☼" icons are on.

4.2.3 Setting of Light ON/OFF Function

(1) Light ON/OFF Function: can set the ON and OFF of light for display panel.

(2) Under power-on or power-off status, press "Light" button to turn on and turn off the light of display panel.

(3) When the light of display panel is turned off, press the other buttons other than "Light" button, the light on display panel will be turned off after 5 seconds.

4.2.4 Temperature Setting

Press "▼" or "▲" buttons under power-on status, the set temperature will be increased or decreased at 1°C each time; when long press the buttons, the temperature will be increased or decreased at 1°C every 0.3 seconds. The temperature setting range is: 16°C~30°C.

Note:

Under auto mode, the temperature cannot be set through pressing "▼" or "▲" buttons.

4.2.5 Function Setting

Press "Function" button under power-on or power-off status, it can enter into function setting status. Under function setting status, press "ON/OFF" button or without pressing any buttons for consecutive 5 seconds, it will quit the function setting status.

(1) Up and down swing function settings

Press "Function" button under power-on status to switch to up and down swing function, when "SWING" icon flickers, press "▲"or"▼" button to start up or cancel the up and down swing function. If "SWING" is on it means the function has been started up; if "SWING" icon is off it means the function has been canceled.

(2) Left and right swing function settings

Press "Function" button under power-on status to switch to left and right swing function, when "SWING" flickers, press "▲"or"▼" button to start up or cancel the left and right swing function. If "SWING" icon is on it means the function has been started up; if "SWING" icon is off it means the function has been canceled.

(3) Settings of X-fan

X-fan function: after closing down the unit under cooling and dry mode, the air conditioner will automatically dry the water of evaporator of indoor unit to prevent breeding of bacteria and mildew.

Turn on or cancel X-fan function: with the unit is started up, under cooling or dry mode, press "Function" button to switch to X-fan function, when "BLOW" flickers, press "▲" or "▼" buttons to start or cancel X-fan function. If "BLOW" icon is on it means the X-fan function has been started up, if "BLOW" icon is off it means the X-fan function has been canceled.

(4) Settings of Timer Function

Timer Function: under power-on status, the count down of power-off time can be set. Under power-off status, the count down of power-on time can be set.

Timer setting: press "function" button to switch to timer function, when "TIMER" icon flichers, press "▲" or "▼" button to adjust the setting time. After setting the time, press "ON/OFF" button or without pressing any buttons for consecutive 5 seconds, the setting time is confirmed and quit the function setting status. After quitting the function setting status, the "TIMER" icon is on, it means the timer function has been turned on.

Cancel timer: press "Function" button to switch to timer function, when "TIMER" icon flickers, press "▲"

or "▼" button to set the time to be "00", then the timer function is canceled; press "ON/OFF" button or without pressing any buttons for consecutive 5 seconds, it will quit the function setting status. After quitting the function setting status, the "TIMER" icon is off, it means the timer function has been canceled.

Count down setting range: 00~24 hours, in which "00" refers to closedown of timer function. Each time press "▲" or "▼" button, if it is within 10 hours, it will increase or decrease 0.5 hour each time, if long press "▲" or "▼" button, it will increase or decrease 0.5 hour every 0.3 second; if it is over 10 hours, each time press "▲" or "▼" button will increase or decrease 1 hour each time, and if long press "▲" or "▼" button, it will increase or decrease 1 hour every 0.3 second.

(5) Setting of air renewal function

Air renewal function: through adjusting the fresh air volume to improve the air quality and keep the indoor fresh air.

Air renewal setting: press "Function" button to switch to air renewal function, when "AIR" icon flickers, press "▲"or"▼" button to adjust the air renewal level; after setting air renewal level, press "ON/OFF" button or without pressing any buttons for consecutive 5 seconds, the air renewal function has been confirmed to be turned on and then quit the function setting status. After quitting the function setting status, the "AIR" icon is on, it means the air renewal function has been turned on.

Cancel air renewal: press "Function" button to switch to air renewal function, when "AIR" icon flickers, press "▲"or"▼" button to set the air renewal as "00", then the air renewal function is canceled; press "ON/OFF" button or without pressing any buttons for consecutive 5 seconds, it will quit the function setting status. After quitting function setting status, the "AIR" icon is off, it means the air renewal function is canceled.

Adjustment range of air renewal level: it can adjust the air renewal level to be 00~10, in which "00" refers to closing down air renewal function.

(6) Setting of Sleeping Function

Sleeping function: set the unit to enter into sleeping operational status, the unit will operate according to the preset sleeping temperature curve to create a comfortable sleeping environment and improve sleeping quality.

Turn on or cancel sleeping function: press "Function" button under power-on status to switch to sleeping function, when "SLEEP" icon flickers, press "▲" or "▼" button to turn on or cancel sleeping function. If "SLEEP" icon is on, it means the sleeping function is turned on; if "SLEEP" icon is off, it means the sleeping function is canceled.

There is no sleeping function under auto and swing mode.

(7) Setting of energy-saving function

Energy-saving function: through setting the lower temperature limit of cooling and dry mode and upper temperature limit of heating mode, to make the air conditioner operate in a smaller temperature range, thus save energy.

Turn on cooling energy-saving: with the unit is started up, under cooling or dry mode, press "Function" button to switch to energy-saving function, when "SE SAVE" icon flickers, press "▲"or "▼" button to adjust cooling temperature limit, after setting cooling temperature limit, press "ON/OFF" button or without pressing any buttons for consecutive 5 seconds, the energy-saving function is confirmed to be turned on and quit the function setting status. After quitting function setting status, the "SE SAVE" icon is on, it means the cooling energy-saving function has been turned on.

Turn on heating energy-saving: with the unit is started up, under heating mode, press "Function" button to switch to energy-saving function, press "▲"or "▼" button to adjust heating temperature limit, if the "SE SAVE" icon flickers, after setting heating temperature limit, press "ON/OFF" button or without pressing any buttons for consecutive 5 seconds, the energy-saving function is confirmed to be turned on and quit the function setting status. After quitting function setting status, the "SE SAVE" icon is on, it means the heating energy-saving function has been turned on.

Cancel energy-saving function: under energy-saving function setting status or under normal power-on status, press "Function" button and "▼" button simultaneously to cancel energy-saving function, when "SE SAVE" icon is off, it means the energy-saving function is canceled.

4.2.6 Speed Settings

Under power-on status, press "Speed" button, the speed will be circularly switched according to the following order:

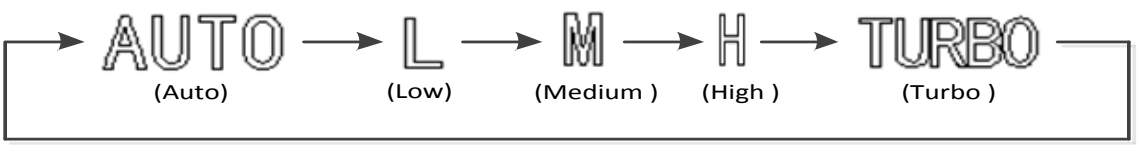

Notes:

① Under dry mode, the speed cannot be adjusted, it will be automatically set to be low.

② When the speed of indoor unit is adjusted to be auto speed, the indoor unit will automatically change speed according to the indoor ambient temperature, to make the indoor ambient temperature be more stable and comfortable.

4.2.7 Special Function

(1) Inquire address of indoor unit

Under power-off status, press "Speed" button and "ON/OFF" button simultaneously for 5 seconds, then the "88" LED will display the engineering No. of the indoor unit for 5 seconds; if the engineering No. is over two digits, it will circularly display the higher two digits and lower two digits.

(2) Inquire unit type

Under power-off status, simultaneously press "Mode" button and "ON/OFF" button for 5 seconds, then the "88" LED will display corresponding code for 5 seconds: heat pump unit will display "nA", cooling only unit will display "nC", heating only unit will display "nH", swing type unit will display "nF".

(3) Setting of power-fail memory function

Under power-off status, simultaneously press “Mode” button and “▲” button for 5 seconds to switch the memory method: if “88” LED displays “on”, it means it will memorize the on and off status of the unit after being de-energized (that is, after de-energizing and energizing the unit, the unit will resume to be the status before it is de-energized); if “88” LED displays “oF”, it means it will not memorized the on and off status of the unit after being de-energized (that is, after de-energizing and energizing the unit, the unit will still be power-off status).

(4) Setting of master indoor unit function

Under power-off status, long press “Mode” button for 5 seconds to set the indoor unit to be master pattern indoor unit (master indoor unit), after finishing setting, the “88” LED will display “UC” for 5 seconds.

Notes:

When the master indoor unit is started up, the operational light “RUN”on display panel will flicker for three times.

(5) Settings of Child Lock Function

Under power-on or power-off status, simultaneously press “▲” button and “▼” button for 5 seconds, it will turn on child lock function, the “88” LED will flicker and display “An” for three times; press “▲” button and “▼” button again for 5 seconds, it will cancel child lock function.

Under child lock status, the unit will not response if pressing other buttons, and the “88” LED will flicker and display “An” to remind the user that the unit is under child lock status.

(6) Long-distance Shielding Function

Long-distance shielding function: long-distance monitor or centralized controller can remotely control related functions of indoor unit or conduct shielding to make the operation invalid, thus realize long-distance control function.

Long-distance shielding function can be divided into full shielding and partial shielding. When it is in full shielding, all the remote control or operation by pressing buttons to the indoor unit will be invalid. If it is in partial shielding, the remote control or operation by pressing buttons to the shielded function of indoor unit will be invalid.

When long-distance monitor or centralized controller conduct long-distance shielding to indoor unit, if the user wants to remotely control or operate the unit by pressing buttons, the “88” LED will flicker and display “Ay” to remind the user that it is under long-distance shielding status.

5 Introduction to Unit Functions

Function Application of IDUs

Indoor unit functions cover user operation functions and engineering application functions. For user operation functions, refer to operating instructions of the IDU, wired controller, and remote controller.

Engineering application functions include:

SN	Function Name
1	Master IDU query and settings
2	Indoor unit project number query and settings
3	User parameter query

SN	Function Name
4	User parameter settings
5	Engineering parameter query
6	Engineering parameter settings

Engineering application functions can be operated through the IDU wired controller (XK46 or XK79) or remote controller (fittings selectable).

5.1 Engineering Application Functions Operated through the XK46 Wired Controller

5.1.1 Master IDU Settings

The master IDU can be set through the wired controller or remote controller. The methods for setting the master IDU through the wired controller are as follows:

Method 1:

Step 1: Set an IDU to power-off status.

Step 2: Press and hold the “MODE” button on the wired controller for more than five seconds.

Step 3: Check whether the setting is successful. If it is, “MASTER” on the wired controller will be on. Otherwise, repeat steps 1 and 2.

In power-off status

Press "MODE" for five seconds

"MASTER" is on when the master indoor unit is successfully set.

Method 2:

Step 1: Press and hold the “FUNCTION” button for five seconds in power-on or power-off status to enter the parameter query interface.

Step 2: Press and hold the “FUNCTION” button for five seconds in “C00” status to enter the parameter setting interface.

Step 3: Press “▲” or “▼” to switch level 2 parameter codes till “P10” is displayed on the temperature area.

Step 4: Press the “MODE” button to set the parameter to “01” and then Press the “ENTER” button. If the setting is successful, “MASTER” on the wired controller will be on.

Master IDU Display

① For IDUs connected with wired controllers, “MASTER” on the wired controller connected with the master IDU will be on.

② For IDUs embedded or connected with LED panels, the operation LED on the LED panel of the master IDU will blink three times.

Note:

After the master IDU is successfully set, stick the “ MASTER ” flag to the wired controller or unit panel for convenience of user operation and engineering maintenance. This flag is placed in the package bag of the ODU.

5.1.2 Project number Query and Settings

(1) Project number query of a single IDU

Press and hold the “FUNCTION” button for five seconds in power-on or power-off status to enter the parameter query interface “C00”. The timer area of the wired controller displays the project number of the current IDU. Synchronously, the double-eight digital LED of the IDU embedded or connected with an LED panel displays its own project number. If the current wired controller works in one-to-many mode, the timer area displays the IDU that has the minimum project number.

(2) Project number of multiple IDUs

Project number query of IDUs in one-to-many mode: Press and hold the “FUNCTION” button for five seconds in power-on or power-off status to enter the parameter query interface “C00”. Press “▽” to switch to “C01”. Press the “MODE” button to enter query. The timer area displays the project numbers of IDUs from small to large. Press “△” or “▽” to switch project numbers. Synchronously, the double-eight digital LED of the IDU embedded or connected with an LED panel displays its own project number.

Note:

It is normal if the buzzer of the IDU operated by the wired controller rings. The purpose of ringing the buzzer is to facilitate engineering commissioning personnel to locate the IDU, especially for the IDU without any LED panel because it cannot display its project number.

Project number query of IDUs in the entire communication network: Press and hold the “FUNCTION” button for five seconds in power-on or power-off status to enter the parameter query interface “C00”. Press “▽” to switch to “C18”. Press the “MODE” button to enter query. The timer area of each wired controller in the entire network displays the project number of the corresponding IDU. Synchronously, the double-eight digital LED of each IDU embedded or connected with an LED panel displays its own project number.

Method for quitting query:

- Quit the “C18” query interface.
- Press the “ON/OFF” button on any wired controller in the network.

(3) Project number settings of IDU

Press and hold the “FUNCTION” button for five seconds in power-on or power-off status to enter the parameter query interface “C00”. Continuously press the “MODE” button for three times, and then press and hold the “FUNCTION” button for five seconds to enter the engineering parameter setting interface. The temperature area displays “P00”.Press “▽” to switch to “P42”.

- Single IDU: Press the “MODE” button. The project number blinks in the timer area. Press “△” or “▽” to adjust the project number, and then Press the “ENTER” button to confirm and return to the upper-level menu.
- One-to-many: Press the “MODE” button to enter the IDU selection menu. Press “△” or “▽” to switch IDUs. Press the “MODE” button to set the project number of the current IDU in the same method as above.

5.1.3 User Parameter Query

User parameters can be queried in power-on or power-off status.

(1) Press and hold the “FUNCTION” button for five seconds to enter the user parameter query interface. The temperature area displays “C00” and “View” is on.

(2) Select a parameter code by pressing “⮝” or “⮟”.

(3) Press the “ENTER/CANCEL” button to return to the upper-level menu till quitting parameter query.

The user parameter query list is as follows:

Table 2.1 User Parameter Query List

Parameter Code	Parameter Name	Parameter Range	View Method
C00	Parameter setting ingress	-	Display mode: Timer area: displays the project number of the current IDU. Note: If the current HBS network consists of multiple IDUs, only the IDU that has the minimum project number is displayed.

Parameter Code	Parameter Name	Parameter Range	View Method
C01	Project number query of IDU and faulty IDU location	1-255: project number of online IDU	Operation method: In “C01” status, press the “MODE” button to enter project number query of IDU. Press “▲” or “▼” to switch the IDU SN. Display mode: Temperature area: displays the fault of the current IDU (in the case of multiple faults, they are circularly displayed every three seconds). Timer area: displays (project number conflict C5 fault)/project number of the current IDU (project numbers are arranged from small to large). Special operations: After users press the “MODE” button to enter project number query, the buzzer of the IDU operated by the wired controller will ring till users quit “C01” query or switch to the next IDU.
C03	Indoor unit quantity query in the system network	1-80	Timer area: displays the number of IDUs in the system network.
C06	Preferential operation query	00: common operation 01: preferential operation	Operation method: In “C06” status, press the “MODE” button to enter the preferential operation query interface. Press “⮝” or “⮟” to switch the IDU SN. Display mode: Temperature area: displays the project number of the current IDU. Timer area: displays the preferential operation setting value of the current IDU.
C07	Indoor environment temperature query	-	Operation method: In “C07” status, press the “MODE” button to enter the indoor environment temperature query interface. Press “⮝” or “⮟” to switch the IDU SN. Display mode: Temperature area: displays the project number of the current IDU. Timer area: displays the temperature value of the indoor environment temperature sensor after replenishment.
C08	Prompt time query for air filter cleaning	4-416: days	Timer area: displays the prompt time for air filter cleaning.
C09	Wired controller address query	01, 02	Timer area: displays the address of the current wired controller.
C11	Indoor unit quantity query in one-to-many mode	1-16	Timer area: displays the number of IDUs controlled by the wired controller.
C12	Outdoor environment temperature query	-	Timer area: displays the temperature value of the environment temperature sensor of the master ODU.

Parameter Code	Parameter Name	Parameter Range	View Method
C17	Indoor relative humidity query	20-90	Operation method: In “C17” status, press the “MODE” button to enter the indoor relative humidity query interface. Press “▲” or “▼” to switch the IDU SN. Display mode: Temperature area: displays the relative humidity value. Timer area: displays the project number of IDU (project numbers are arranged from small to large). If the HBS network consists of only one IDU, the timer area directly displays the IDU relative humidity value in the “C17” interface.
C18	Indoor unit project number query in the communication network	1-255	Operation method: In “C18” status, press the “MODE” button to enter the IDU project number query interface. Press “▲” or “▼” to switch the IDU SN. Cancellation method: 1) If users quit the “C18” query interface within 20 seconds, the project number display is cancelled. 2) If the query interface is quit after 20 seconds upon timeout, press the “ON/OFF” button in power-on or power-off status to cancel the project number display. 3) The method for cancelling the project number display on any wired controller in the network is the same as ②. Display mode: Temperature area: displays the SN of the current IDU (project numbers are arranged from small to large). Timer area: displays the project number of the current IDU. Each IDU/wired controller in the network displays its own project number (the wired controller circularly displays project numbers of IDUs every second from small to large).
C20	Fresh-air IDU outlet temperature query	-9 to 99	Operation method: In “C20” status, press the “MODE” button to enter the fresh-air IDU temperature query interface. Press “▲” or “▼” to switch the IDU SN. Display mode: Temperature area: displays the project number of the current IDU (1-16, project numbers are arranged from small to large). Timer area: displays the fresh-air IDU outlet temperature. If the HBS network consists of only one IDU, the timer area directly displays the fresh-air IDU outlet temperature in the “C20” interface.
C23	Inquiry of the version of wired controller	-	Display mode: Display in timer zone: version of the wired controller (display on the right) Note: ① .Version of the wired controller refers to ~~the~~ the version of the program of the wired controller. ② The version number doesn’t have decimal points. It’s an integral number.

Note:

In parameter query status, “FAN”, “TIMER”, “SLEEP”, and “SWING” are invalid. By pressing the “ON/OFF” button, users can return to the main interface but not power on/off the unit.

In parameter query status, signals of the remote controller are invalid.

5.1.4 User Parameter Settings

User parameters can be set in power-on or power-off status.

(1) Press and hold the “FUNCTION” button for five seconds. The temperature area displays “C00”. Press and hold the “FUNCTION” button for another five seconds to enter the wired controller parameter setting interface. The temperature area displays “P00”.

(2) Select a parameter code by pressing “⮝” or “⮟”. Press the “MODE” button to switch to parameter value settings. The parameter value blinks. Adjust the parameter value by pressing “⮝” or “⮟” and then press the “ENTER/CANCEL” button to complete settings.

(3) Press the “ENTER/CANCEL” button to return to the upper-level menu till quitting parameter settings.

(4) The user parameter setting list is as follows:

Table 2.2 User Parameter Setting List

Parameter Code	Parameter Name	Parameter Range	Default Value	Remark
P10	Master IDU settings	00: Not change the master/slave status of the current IDU 01: set the current IDU to master IDU	00	After the IDU connected with the current wired controller is successfully set to master IDU, “MASTER” on the wired controller is on.
P11	Infrared connection settings of wired controller	00: disabled 01: enabled	01	This setting can only be enabled through the master wired controller. When the infrared remote receiving function of the wired controller is disabled, neither the master nor slave wired controller can receive remote signals. The wired controllers can only be operated by pressing.
P13	Wired controller address settings	01: master wired controller 02: slave wired controller	01	When two wired controllers simultaneously control one or more IDUs, the two wired controllers should use different addresses. The slave wired controller (address: 02) does not have the unit parameter setting function except its own address settings.
P14	Group-controlled IDU quantity settings	00: disabled 01-16: number of indoor units	01	This value is set based on the number of connected IDUs. If the current value is inconsistent with the actual number of group-controlled IDUs, “L9” fault may occur.
P16	Unit setting for display temperature	00：°C 01：°F	00	-
P30	Static pressure setting for general indoor unit	Type 1: 03.04.05.06.07 Type 2: 01.02.03.04.05.06.07.08.09	05	01-09 are valid for high ESP duct type unit; only 03-07 are valid for other indoor unit.
P31	Ceiling installation height setting	00: standard-ceiling installation height 01: high-ceiling installation height	00	-
P33	Timer function settings	00: common timer 01: time-point timer	00	-
P34	Repeating validity for time-point timer	00: single timer 01: repeated everyday	01	This setting is valid only when the timer function is set to time-point timer.
P37	Upper temperature limit setting for auto mode	17°C -30°C (63°F～86°F)	25 (77°F)	When temperature unit is °C: upper temprature limit-lower temperature limit ≥1 When temperature unit is ℉: upper temperature limit-lower temperature limit ≥2
P38	Lower temperature limit setting for auto mode	16°C -29°C (61°F～84°F)	20 (68°F)	

Parameter Code	Parameter Name	Parameter Range	Default Value	Remark
P43	Preferential operation settings	00: common operation 01: preferential operation	00	When power supply is insufficient, users are allowed to power on/off the IDU set with preferential operation and other IDUs are forcibly powered off. A fault code is displayed on the IDU that is forcibly powered off.
P46	Accumulated time clearing for air filter cleaning	00: not cleared 01: cleared	00	-
P49	Opening angle of indoor unit air-return plate*	01: angle 1(25°) 02: angle 2(30°) 03: angle 3(35°)	01	Only applicable to units with air-return plate.
P50	Air outlet temperature setting of cooling for Fresh Air Unit	16°C~30°C (61~86°F)	18°C (64°F)	Only applicable to Fresh Air Indoor Unit.
P51	Air outlet temperature setting of heating for Fresh Air Indoor Unit	16°C~30°C (61~86°F)	22°C (72°F)	Only applicable to Fresh Air Indoor Unit.
P54	Linkage function setting of Fresh Air Indoor Unit	00: without linkage control 01: with linkage control	00	After linkage function is set, Fresh Air Indoor Unit will be turned on/off following the on/off status of common indoor unit. Besides, Fresh Air Indoor Unit can also be turned on/off manually. NOTICE: Only applicable to Fresh Air Indoor Unit.
P69	Signal type of gate control	01:5-12V DC (including 12V) signal of gate control 02: 12V-24V DC (excluding 12V) signal of gate control 03: 110V AC signal of gate control 04: 220V AC signal of gate control	04	Only applicable to wired controller XK79 with gate control.
P71	Setback function setting	00：invalid 01：valid	00	Only applicable for gate control wired controller.
P72	Upper temperature limit of Setback function	20~30°C (68~86°F)	26°C (79°F)	Only applicable for gate control wired controller.
P73	Lower temperature limit of Setback function	16~26°C (61~79°F)	20°C (68°F)	Only applicable for gate control wired controller.
P74	Gate control status setting	00：OFF 01：Operate at the status before pulling out the status	01	-
P78	Cold air prevention time setting for indoor unit	00：180s 01：300s 02：420s 03：600s	00	-
P82	Time format setting	00：24h format 01：12h format	00	-
P63, P64, P65, P76 and P77 are reserved code. Please do not set it.				

Note:

In parameter setting status, “FAN”, “TIMER”, “SLEEP”, and “SWING” are invalid. By pressing the “ON/OFF” button, users can return to the main interface but not power on/off the unit.

In parameter setting status, signals of the remote controller are invalid.

5.1.5 Engineering Parameter Query

Engineering parameters can be queried in power-on or power-off status.

Press and hold the “FUNCTION” button for five seconds to enter the engineering parameter query interface. The temperature area displays “C00” and “View” is on.

(1) Within five seconds after “C00” is displayed, continuously press the “MODE” button for three times in an interval less than one second to enter engineering parameter query.

(2) Select a parameter code by pressing “⮝” or “⮟”.

(3) Press the “ENTER/CANCEL” button to return to the upper-level menu till quitting parameter query.

In the engineering parameter query interface, users can also query user parameters listed in Table 2.3.

The engineering parameter query list is as follows:

Table 2.3 Engineering Parameter Query List

Parameter Code	Parameter Name	Parameter Range	View Method
C00	Parameter setting ingress (default)	-	Display mode: Timer area: displays the project number of the current IDU. Note: If the current HBS network consists of multiple IDUs, only the IDU that has the minimum project number is displayed.
C02	Indoor unit capacity query	-	Operation method: In “C02” status, press the “MODE” button to enter the preferential operation query interface. Press “⮝” or “⮟” to switch the project number of IDU. Display mode: Temperature area: displays the project number of the current IDU. Timer area: displays the current IDU capacity/IDU capacity after adjustment.
C04	Project number query of master IDU	1-255: project number 00: no master IDU	Timer area: displays the project number of the master IDU/00.
C05	Historical fault query ingress of IDU	Five historical faults	Operation method: 1. In “C05” status, press the “MODE” button to enter the historical fault query interface. Press “⮝” or “⮟” to switch the project number of IDU. Press the “MODE” button to enter fault code query of the current IDU. Press “⮝” or “⮟” to switch the fault SN. Press the “ENTER/CANCEL” button to return to the upper-level menu. Display mode: Temperature area: displays the fault SN and fault code. Timer area: displays the project number of IDU.
C10	Static pressure setting query of ODU	00: 0 Pa 20: 20 Pa 50: 50 Pa 82: 82 Pa	Operation method: In “C10” status, press the “MODE” button to enter static pressure setting query of ODU. Press “⮝” or “⮟” to switch the ODU address. Display mode: Temperature area: displays the address of the current ODU. Timer area: displays the static pressure setting value.
C13	Outdoor unit network number query	1-255	Timer area: displays the network number of the current ODU.

Parameter Code	Parameter Name	Parameter Range	View Method
C14	Temperature query for inlet-tube temperature sensor of IDU	-9 to 99	Operation method: In “C14” status, press the “MODE” button to enter inlet-tube temperature sensor query of IDU. Press “⮝” or “⮟” to switch the IDU SN. Display mode: Temperature area: displays the project number of the current IDU. Timer area: displays the temperature value. If the HBS network consists of only one IDU, the timer area directly displays the temperature value in the “C14” interface. No matter Fahrenheit or Centigrade remote signals are received, the temperature is displayed in Centigrade. When the wired controller displays the inlet-tube temperature after receiving signals from the remote controller, the inlet-tube temperature of the IDU that has the minimum project number in the HBS network is displayed by default.
C15	Temperature query for outlet temperature sensor of IDU	-9 to 99	Operation method: In “C15” status, press the “MODE” button to enter outlet temperature sensor query of IDU. Press “⮝” or “⮟” to switch the IDU SN. Display mode: Temperature area: displays the project number of the current IDU. Timer area: displays the temperature value. If the HBS network consists of only one IDU, the timer area directly displays the temperature value in the “C14” interface. No matter Fahrenheit or Centigrade remote signals are received, the temperature is displayed in Centigrade. When the wired controller displays the inlet-tube temperature after receiving signals from the remote controller, the inlet-tube temperature of the IDU that has the minimum project number in the HBS network is displayed by default.
C16	Opening degrees query of electronic expansion valve of IDU	0-20	Operation method: In “C16” status, press the “MODE” button to enter electronic expansion valve opening degree query of IDU. Press “⮝” or “⮟” to switch the IDU SN. Display mode: Temperature area: displays the project number of the current IDU. Timer area: displays the opening degree value. If the HBS network consists of only one IDU, the timer area directly displays the opening degree value of electronic expansion valve in the “C16” interface. When the wired controller displays the opening degree of electronic expansion valve after receiving signals from the remote controller, the opening degree of electronic expansion valve of the IDU that has the minimum project number in the HBS network is displayed by default.
n2	Capacity configuration ratio upper-limit of outdoor/IDU	35: 135% 50: 150%	Temperature area: displays the parameter code. Timer area: displays the setting value of capacity configuration ratio of the current outdoor/IDU.
n6	Historical fault query ingress of ODU	Five historical faults	Operation method: In “n6” status, press the “MODE” button to enter fault code query of ODU (when a wired controller controls multiple IDUs, only the faults memorized by the IDU that has the minimum project number can be queried). Press “⮝” or “⮟” to switch the fault SN. Press the “ENTER/CANCEL” button to return to the upper-level menu. Display mode: Temperature area: displays the fault SN and fault code from left to right (1-5, faults are arranged from the earliest to the latest). Timer area: displays the project number of the ODU.

<table>
<tr><th>Parameter Code</th><th>Parameter Name</th><th>Parameter Range</th><th>View Method</th></tr>
<tr><td>n7</td><td>Parameter query ingress of ODU</td><td>01-13
25-29</td><td>Operation method (n7 query is not supported for the slave wired controller):
In “n7” status, the timer area is not displayed. Press the “MODE” button to enter parameter query of ODU. The first bit in the temperature area (display bit of the ODU module ID) blinks. Press “▲” or “▼” to switch the ODU module ID. Press the “MODE” button to select an ODU module. In this case, the first bit in the temperature area stops blinking, and the second and third bits in the temperature area display the parameter code. The timer area displays a corresponding parameter value. Press “▲” or “▼” to switch the parameter code and press the “ENTER/CANCEL” button to return to the upper-level menu.
Display mode:
Temperature area: displays the ODU module ID and parameter code from left to right.
Timer area: displays a corresponding parameter value to the right.
<table>
<tr><th>Parameter Code</th><th>Parameter Name</th><th>Unit</th></tr>
<tr><td>01</td><td>Outdoor environment temperature</td><td>°C</td></tr>
<tr><td>02</td><td>Operation frequency of compressor 1</td><td>Hz</td></tr>
<tr><td>03</td><td>Operation frequency of compressor 2</td><td>Hz</td></tr>
<tr><td>04</td><td>Operation frequency of outdoor fan</td><td>Hz</td></tr>
<tr><td>05</td><td>Module high-pressure</td><td>°C</td></tr>
<tr><td>06</td><td>Module low-pressure</td><td>°C</td></tr>
<tr><td>07</td><td>Discharge temperature of compressor 1</td><td>°C</td></tr>
<tr><td>08</td><td>Discharge temperature of compressor 2</td><td>°C</td></tr>
<tr><td>09</td><td>Discharge temperature of compressor 3</td><td>°C</td></tr>
<tr><td>10</td><td>Discharge temperature of compressor 4</td><td>°C</td></tr>
<tr><td>11</td><td>Discharge temperature of compressor 5</td><td>°C</td></tr>
<tr><td>12</td><td>Discharge temperature of compressor 6</td><td>°C</td></tr>
<tr><td>13</td><td>Operation frequency of compressor 3</td><td>Hz</td></tr>
<tr><td>25</td><td>Outdoor unit heating EXV1
(Actual value = Displayed value * 10)</td><td>PLS</td></tr>
<tr><td>26</td><td>Outdoor unit heating EXV2
(Actual value = Displayed value * 10)</td><td>PLS</td></tr>
<tr><td>27</td><td>Subcooler EXV
(Actual value = Displayed value * 10)</td><td>PLS</td></tr>
<tr><td>28</td><td>Defrosting temperature</td><td>°C</td></tr>
<tr><td>29</td><td>Liquid-extracting temperature of subcooler</td><td>°C</td></tr>
<tr><td>30</td><td>Outlet temperature of accumulator</td><td>°C</td></tr>
<tr><td>31</td><td>Oil return temperature</td><td>°C</td></tr>
<tr><td>32</td><td>Inlet-tube temperature of condenser</td><td>°C</td></tr>
<tr><td>33</td><td>Outlet temperature of condenser</td><td>°C</td></tr>
</table></td></tr>
<tr><td>A6</td><td>Unit cooling/heating function</td><td>nA:cooling/heating
nC:single-cooling
nH:single-heating
nF: air supply</td><td>Temperature area: displays the parameter code.
Timer area: displays the cooling/heating function setting value of the current unit.</td></tr>
</table>

<table>
<tr><th>Parameter Code</th><th>Parameter Name</th><th>Parameter Range</th><th>View Method</th></tr>
<tr><td>nb</td><td>Bar code query of IDU</td><td>0-9, A-Z, a-z, -</td><td>Operation method (nb query is not supported for the slave wired controller):
In “nb” status, the timer area is not displayed. Press the “MODE” button to enter bar code query. The temperature area displays “nb” and the project number in the timer area blinks. Press “▲” or “▼” to switch the project number of IDU.
Press the “MODE” button to select an IDU. The temperature area displays “Un” and the timer area displays “-n”. Press “▲” or “▼” to display the entire-unit bar code and controller bar code of IDU. Press the “ENTER/CANCEL” button to return to the upper-level menu. The temperature area displays “nb” and the timer area displays the project number of the queried IDU. Press the “ENTER/CANCEL” button again to return to the upper-level menu.
Display mode:
Temperature area: displays nb/Un/Pc/bar code.
Timer area: displays -n/project number/bar code.
The following is an example:
<table>
<tr><th>Example</th><th>Temperature Area</th><th>Timer Area</th><th>Remark 1</th><th>Remark 2</th></tr>
<tr><td rowspan="3">Entire-init bar code of IDU N1r012815 0066</td><td>Un (to the right)</td><td>-n (in the middle)</td><td>It indicates that the following is the entire-unit bar code of IDU.</td><td rowspan="6">Press “▼” to display downward and press “▲” to display upward.</td></tr>
<tr><td>N1r</td><td>0128</td><td>It indicates the former seven bits of the bar code.</td></tr>
<tr><td>150</td><td>066</td><td>It indicates the latter six bits of the bar code.</td></tr>
<tr><td rowspan="3">Controller bar code of IDU N1r012815 0067</td><td>Pc</td><td>-n</td><td>It indicates that the following is the controller bar code of IDU.</td></tr>
<tr><td>N1r</td><td>0128</td><td>It indicates the former seven bits of the bar code.</td></tr>
<tr><td>150</td><td>067</td><td>It indicates the latter six bits of the bar code.</td></tr>
</table>
Note:
① Un indicates the entire-unit bar code of IDU and Pc indicates the controller bar code of IDU.
② When there is only one IDU, press the “MODE” button in “nb” status to enter bar code query without selecting the project number of IDU.
③ The system quits the query status if no operations are performed in 60 seconds.
④ The bar code query starts from the entire-unit bar code of IDU and ends at the controller bar code of IDU without circulation. That is, the query does not start again even if users press “▼”.</td></tr>
</table>

Note:

In parameter query status, “FAN”, “TIMER”, “SLEEP”, and “SWING” are invalid. By pressing the “ON/OFF” button, users can return to the main interface but not power on/off the unit.

In parameter query status, signals of the remote controller are invalid.

5.1.6 Engineering Parameter Settings

Engineering parameters can be set in power-on or power-off status.

(1) Press and hold the “FUNCTION” button for five seconds. The temperature area displays “C00”. Continuously press the “MODE” button for three times, and then press and hold the “FUNCTION” button for five seconds to enter the engineering parameter setting interface. The temperature area displays “P00”.

(2) Select a parameter code by pressing “⮝” or “⮟”. Press the “MODE” button to switch to parameter value settings. The parameter value blinks. Adjust the parameter value by pressing “⮝” or “⮟” and then press the “ENTER/CANCEL” button to complete settings.

(3) Press the “ENTER/CANCEL” button to return to the upper-level menu till quitting parameter settings.

In the engineering parameter setting interface, users can also set user parameters listed in Table 2.4

The engineering parameter setting list is as follows:

Table 2.4 Engineering Parameter Setting List

Parameter Code	Parameter Name	Parameter Range	Default Value	Remark
P15	Power-down memory mode	00: standby after power-down recovery 01: restoring the original status after power-down recovery	00	-
P17	Historical fault clearing for IDU	00: not cleared 01: cleared	00	Historical faults of all IDUs controlled by the current wired controller are cleared.
P20	Environment temperature sensor settings for IDU	01: temperature sensor of air return vent 02: temperature sensor of wired controller 03: temperature sensor of air return vent for cooling, dehumidifying, and air supply; temperature sensor of wired controller for heating 04: temperature sensor of wired controller for cooling, dehumidifying, and air supply; temperature sensor of air return vent for heating	03	When there are master and slave wired controllers and the temperature sensor of wired controller is used, only the temperature sensor of the master wired controller is used by default. Note: ① In automatic mode, the environment temperature sensor settings are invalid for a common IDU but the setting value is memorized. ② The environment temperature sensor settings are invalid for a fresh-air IDU. The temperature sensor of air return vent is used by default.
P21	Corrected value of environment temperature sensor of IDU (for cooling, dehumidifying, and air supply)	-15 to +15	Temperature sensor of unit: 0°C; temperature sensor of wired controller: 0°C	Press “⮝” or “⮟” to add or reduce by 1°C.

Parameter Code	Parameter Name	Parameter Range	Default Value	Remark
P22	Corrected value of environment temperature sensor of IDU (for heating, fast heating, and air warming)	-15 to +15	Temperature sensor of unit: -2°C; temperature sensor of wired controller: 0°C	Press "⮝" or "⮟" to add or reduce by 1°C. The temperature sensor of unit and the temperature sensor of wired controller share the same corrected value. In heating mode, corrected value of temperature sensor of unit = corrected value of temperature sensor of wired controller - 2°C.
P32	Capacity adjustment function of IDU	-40% to +40%	00	Press "⮝" or "⮟" to add or reduce by 10%.
P35	Factory setting recovery for user functions	00: invalid 01: valid	00	Select "01" and then press and hold the "ENTER/CANCEL" button to restore the factory settings for user functions (factory setting recovery fails if remote shielding is valid).
P36	Factory setting recovery for engineering settings	00: invalid 01: valid	00	Select "01" and then press and hold the "ENTER/CANCEL" button to restore the factory status for engineering settings (factory setting recovery fails if remote shielding is valid).
P40	Prevention for heat collection	00: disabled 10: 10s 20: 20s 30: 30s 40: 40s 50: 50s 60: 60s	00	It indicates the number of seconds for enabling the low-level fan every 15min.
P41	Longest defrosting time setting for outdoor unit	10/15/20：10/15/20min	15	-
P42	Project number settings of IDU	1-255	Automatically generated upon the initial system operation	In "P42" status, press the "MODE" button to enter the setting menu. The project number blinks in the timer area. Press "⮝" or "⮟" to adjust the project number. Press the "ENTER/CANCEL" button to confirm settings and return to the upper-level menu.
P45	One-key project number reset for IDU	00: invalid 01: valid	00	When it is set to "01", the wired controller initiates an IDU project number reset command.
P48	Minimum opening degree setting for heating breakdown of IDU expansion valves	00: automatically controlled 1-500	-	After the default minimum opening degree for heating breakdown is manually modified, the opening degree remains unchanged upon heating breakdown.
P53	AHU-KIT linkage function setting	00：invalid 01：valid	00	When setting "01", multiple AHU-KIT can operate simultaneously.
P55	Static pressure settings for DC Fresh Air Indoor Unit	Setting range: 01、02、03、04、05、06、07、08、09、10、11、12、13	08	Only applicable to DC Fresh Air Indoor Unit.
P56	Fan status setting under heating mode	00：OFF； 01：fan speed setting；	00	It's the fan status when heating to the temperature point. When setting "01", the fan operates according to the set fan speed. Only applicable for AHU-KIT indoor unit.
P60	AHU-KIT working method setting	00：air-return type 01：fresh air type	-	Only applicable for AHU-KIT indoor unit.

Parameter Code	Parameter Name	Parameter Range	Default Value	Remark
P66	Flag bit for unit of dual heat source	01: cancel the setting of dual heat source for the indoor unit 02: set the indoor unit as dual heat source 03: cancel the setting of dual heat source for all units 04: set all units as dual heat source	01	-
P75	Fan speed setting when heating thermostat is OFF	00：LL speed 01：OFF	00	Only valid for the cassette type unit
P80	Display temperature setting	00 ： display setting temperature 01 ： display ambient temperature	00	-
P81	Functional setting of lifting panel	00: invalid 01: valid	00	Only valid for the 360° air discharge cassette type.
n0	System conservation operation settings	00: comfortability preferred 01: conservation preferred	00	-
n1	Defrosting period settings	40: 40min 50: 50min 60: 60min	50	-
n3	Forcible defrosting	00: common 01: forcible defrosting	-	After settings, it automatically restores to “00”.
n4	Highest capacity output limitation settings for ODU	08: 80% 09: 90% 10: 100%	10	Enter query in “n4” status. The temperature area displays the function code and the timer area displays the corresponding function setting value.
A7	Silent function of ODU	00: no silent function 01-09: intelligent nighttime silent mode 10-12: forcible silent mode	00	Enter query in “A7” status. The temperature area displays the function code and the timer area displays the corresponding function setting value.
P47, P52-53, P57-59, P61-62, P67-68, P70, P79, qb, 4d, 4L are reserved code. Please do not set it.				

Note:

In parameter setting status, “FAN”, “TIMER”, “SLEEP”, and “SWING” are invalid. By pressing the “ON/OFF” button, users can return to the main interface but not power on/off the unit.

In parameter setting status, signals of the remote controller are invalid.

5.1.7 Failure Display

When a fault occurs during the system operation, the temperature area of wired controller displays the fault code. When multiple faults occur, fault codes are circularly displayed.

When a fault occurs, power off the unit and ask for professional maintenance personnel for help.

The following figure shows the power-on high-pressure protection fault interface.

Power-on High-pressure Protection Fault Interface

Note:

If the IDU connected with the current wired controller is a fresh-air IDU, “FAP” is displayed on the main interface of the wired controller. Only the outlet temperature can be set for the fresh-air IDU. For the setting method, see the “IDU Function Settings” section.

5.2 Engineering Application Functions Operated through the XK79 Wired Controller

5.2.1 Master IDU Settings

The master IDU can be set through the wired controller or remote controller. The methods for setting the master IDU through the wired controller are as follows:

Method 1:

Step 1: Set an IDU to power-off status.

Step 2: Press and hold the “MODE” button on the wired controller for more than five seconds.

Step 3: Check whether the setting is successful. If it is, “MASTER” on the wired controller will be on. Otherwise, repeat steps 1 and 2.

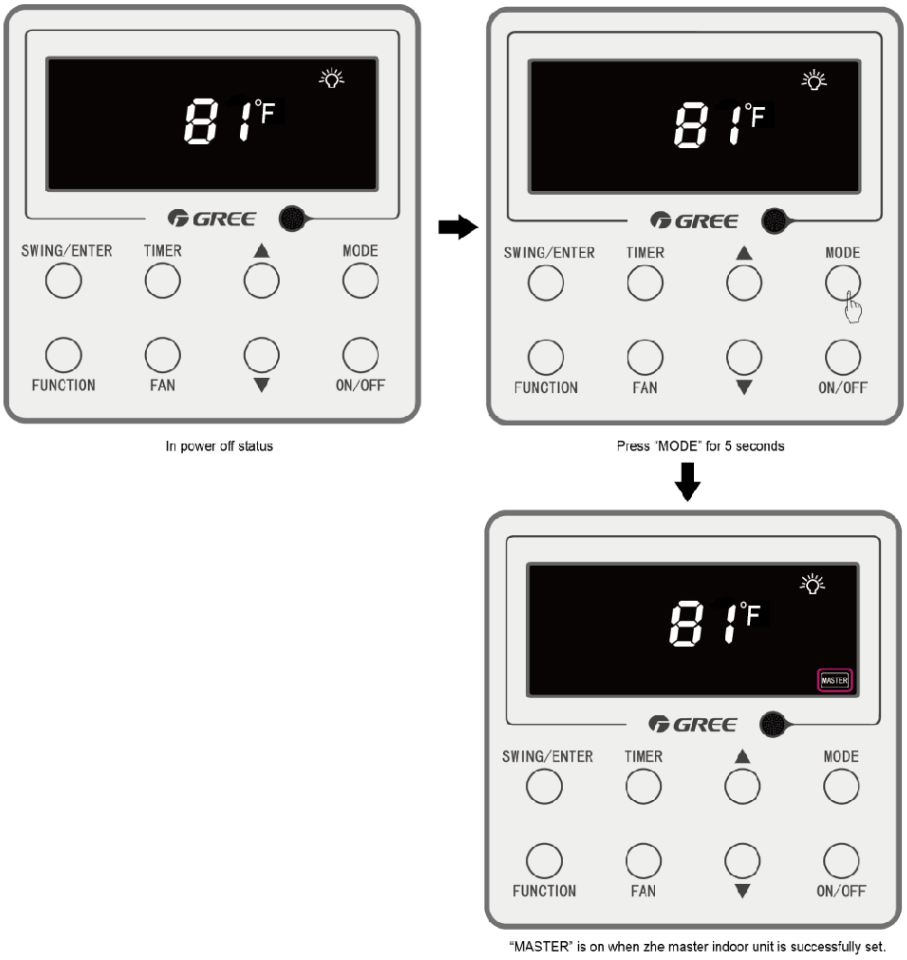

Method 2:

Step 1: Press and hold the “FUNCTION” button for five seconds in power-on or power-off status to enter the parameter query interface.

Step 2: Press and hold the “FUNCTION” button for five seconds in “C00” status to enter the parameter setting interface.

Step 3: Press “▲” or “▼” to switch level 2 parameter codes till “P10” is displayed on the temperature area.

Step 4: Press the “MODE” button to set the parameter to “01” and then Press the “SWING/ENTER” button. If the setting is successful, “MASTER” on the wired controller will be on.

Master IDU Display:

① For IDUs connected with wired controllers, “MASTER” on the wired controller connected with the master IDU will be on.

② For IDUs embedded or connected with LED panels, the operation LED on the LED panel of the master IDU will blink three times.

Note:

After the master IDU is successfully set, stick the “ MASTER ” flag to the wired controller or unit panel for convenience of user operation and engineering maintenance. This flag is placed in the package bag of the ODU.

5.2.2 User Parameter Query

User parameters can be queried in power-on or power-off status.

(1) Press and hold the “FUNCTION” button for five seconds to enter the user parameter query interface. The temperature area displays “C00” and “View” is on.

(2) Select a parameter code by pressing “▲” or “▼”.

(3) Press the “SWING/ ENTER” button to return to the upper-level menu till quitting parameter query.

(4) For the user parameter query list of the XK79 wired controller, refer to the user parameter query list in XK46 user parameter query.

Note:

In parameter query, the function of “SWING/ ENTER” on the XK79 wired controller is equivalent to the function of “ENTER/CANCEL” on the XK46 wired controller.

5.2.3 User Parameter Settings

User parameters can be set in power-on or power-off status.

(1) Press and hold the “FUNCTION” button for five seconds. The temperature area displays “C00”. Press and hold the “FUNCTION” button for another five seconds to enter the wired controller user parameter setting interface. The temperature area displays “P00”.

(2) Select a parameter code by pressing “▲” or “▼”. Press the “MODE” button to switch to parameter value settings. The parameter value blinks. Adjust the parameter value by pressing “▲” or “▼” and then press the “SWING/ ENTER” button to complete settings.

(3) Press the “SWING/ ENTER” button to return to the upper-level menu till quitting parameter settings.

(4) For the user parameter setting list of the XK79 wired controller, refer to the user setting query list in XK46 user parameter settings.

Note:

In parameter settings, the function of “SWING/ ENTER” on the XK79 wired controller is equivalent to the function of “ENTER/CANCEL” on the XK46 wired controller.

5.2.4 Engineering Parameter Query

Engineering parameters can be queried in power-on or power-off status.

(1) Press and hold the “FUNCTION” button for five seconds to enter the engineering parameter query interface. The temperature area displays “C00” and “VIEW” is on.

(2) In “C00” status, continuously press the “MODE” button for three times to enter engineering parameter query.

(3) Select a parameter code by pressing “▲” or “▼”.

(4) Press the “SWING/CANCEL” button to return to the upper-level menu till quitting parameter query.

(5) For the engineering parameter query list of the XK79 wired controller, refer to the engineering parameter query list in XK46 engineering parameter query.

Note:

In parameter query, the function of “SWING/CANCEL” on the XK79 wired controller is equivalent to the function of “ENTER/CANCEL” on the XK46 wired controller.

5.2.5 Engineering Parameter Settings

Engineering parameters can be set in power-on or power-off status.

(1) Press and hold the “FUNCTION” button for five seconds. The temperature area displays “C00”. Continuously press the “MODE” button for three times, and then press and hold the “FUNCTION” button for another five seconds to enter the wired controller engineering parameter setting interface. The temperature area displays “P00”.

(2) Select a parameter code by pressing “▲” or “▼”. Press the “MODE” button to switch to parameter value settings. The parameter value blinks. Adjust the parameter value by pressing “▲” or “▼” and then press the “SWING/CANCEL” button to complete settings.

(3) Press the “SWING/CANCEL” button to return to the upper-level menu till quitting parameter settings.

For the engineering parameter setting list of the XK79 wired controller, refer to the engineering setting query list in XK46 engineering parameter settings.

Note:

In parameter settings, the function of “SWING/CANCEL” on the XK79 wired controller is equivalent to the function of “ENTER/CANCEL” on the XK46 wired controller.

5.3 Engineering Application Functions Operated through the YAP1F Remote Controller

The YAP1F remote controller only provides engineering application functions for setting the master IDU. For other user operation functions, refer to the "*Remote Controller Operating Instructions*".

The method for setting the master IDU through the YAP1F remote controller is as follows:

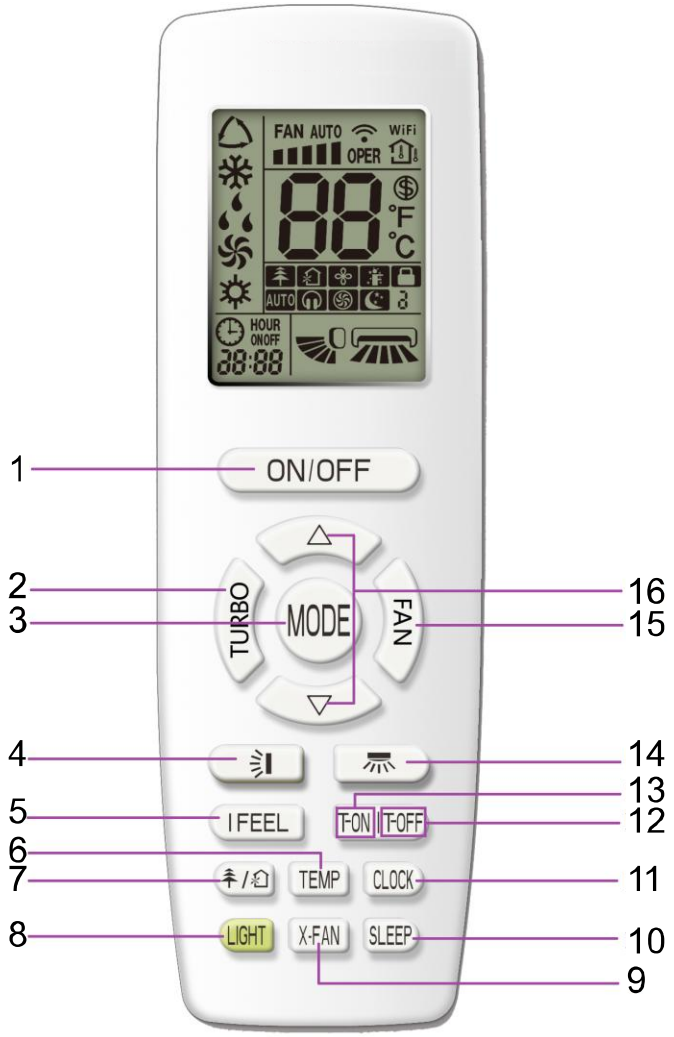

No.	Button name	Function
1	ON/OFF	Turn on or turn off the unit
2	TURBO	Set turbo function
3	MODE	Set operation mode
4		Set up&down swing status
5	I FEEL	Set I FEEL function
6	TEMP	Switch temperature displaying type on the unit's display
7		Set health function and air function
8	LIGHT	Set light function
9	X-FAN	Set X-FAN function
10	SLEEP	Set sleep function
11	CLOCK	Set clock of the system
12	TOFF	Set timer off function

No.	Button name	Function
13	TON	Set timer on function
14		Set left&right swing status
15	FAN	Set fan speed
16	△/▽	Set temperature and time

(For details about the above figures, refer to the instructions 66174100016).

Perform settings by pressing "▲" and "▼" in air supply mode:

① Set the temperature to 30°C.

② Press "▼" and then "▲" in five seconds. Repeat this operation for three times.

③ After successful settings, "UC" is displayed on the receiving indicator panel of the remote controller for five seconds and "MASTER" is displayed on the wired controller.

INSTALLATION

1 Engineering Installation Preparation and Notice

1.1 Installation Notice

Personnel and property safety are highly concerned during the entire installation process. Installation implementation must abide by relevant national safety regulations to ensure personnel and property safety.

All personnel involved in the installation must attend safety education courses and pass corresponding safety examinations before installation. Only qualified personnel can attend the installation. Relevant personnel must be held responsible for any violation of the regulation.

1.2 Installation Key Points and Importance

VRF air conditioning systems use refrigerant, instead of other agent, to directly evaporate to carry out the system heat. High level of pipe cleanness and dryness is required in the system. Since various pipes need to be prepared and laid out onsite, carelessness or maloperation during installation may leave impurities, water, or dust inside refrigerant pipes. If the design fails to meet the requirement, various problems may occur in the system or even lead to system breakdown.

Problems that usually occur during installation are as follows:

No.	Installation Problem	Possible Consequence
1	Dust or impurities enter into the refrigeration system.	Pipes are more likely to be blocked; air conditioning performance is reduced; compressor wear is increased or even hinder the normal operation of the system and burn the compressor.
2	Nitrogen is not filled into the refrigerant pipe or insufficient Nitrogen is filled before welding.	Pipes are more likely to be blocked; air conditioning performance is reduced; compressor wear is increased or even hinder the normal operation of the system and burn the compressor.
3	The vacuum degree in the refrigerant pipe is insufficient.	The refrigeration performance is reduced. The system fails to keep normal operation due to frequent protection measures. When the problem getting serious, compressor and other major components can be damaged.
4	Water enters into the refrigeration system.	Copper plating may appear on the compressor and reduce the compressor efficiency with abnormal noise generated; failures may occur in the system due to ice plug.
5	The refrigerant pipe specifications do not meet the configuration requirements.	Smaller configuration specifications can increase the system pipe resistance and affect the cooling performance; larger configuration specifications are waste of materials and can also reduce the cooling performance.
6	Refrigerant pipe is blocked.	The cooling performance is reduced; in certain cases, it may cause long-term compressor operating under overheat conditions; the lubricating effect can be affected and the compressor may be burnt if impurities were mixed with the lubricating oil.
7	Refrigerant pipe exceeds the limit.	The loss in pipe is considerable and the unit energy efficiency decreases, which are harmful for long-term running of the system.
8	Incorrect amount of refrigerant is filled.	The system cannot correctly control the flow allocation; the compressor may be operating under over-heating environment or running when the refrigerant flows back to the compressor.
9	The refrigerant pipe leaks.	Insufficient refrigerant circulating in the system decreases the cooling performance of the air conditioner. Long-term operation under such circumstance may cause an overheating compressor or even damage the compressor.
10	Water drainage from the condensate water pipe is not smooth.	Residual water in IDUs can affect the normal operation of the system. The possible water leakage can damage the IDU's decoration.
11	The ratio of slop for condensate water pipe is insufficient or the condensate water pipe is incorrectly connected.	Reverse slop or inconsistent connection of condensate water pipe can hinder the smooth drainage and cause leakage of the IDU.
12	The air channel is improperly fixed.	The air channel will deform; vibration and noise occur during unit operating.
13	The guide vane of air channel is not reasonably manufactured.	Uneven air quantity allocation reduces the overall performance of the air conditioner.

No.	Installation Problem	Possible Consequence
14	The refrigerant pipe or condensate water pipe does not meet the insulation requirement.	Water can easily condensate and drip to damage the indoor decoration, or even trigger the protection mode of system due to overheating operation.
15	The installation space for IDU is insufficient.	Since there is a lack of space for maintenance and checking, indoor decoration might need to be damaged during such operation.
16	The IDU or the location of the air outlet or return air inlet is not designed reasonably.	The air outlet or return air inlet may be short-circuited, thus affecting the air conditioning performance.
17	The ODU is improperly installed.	The ODU is difficult to be maintained; unit exhaust is not smooth, which reduces the heat exchanging performance or even prevent the system from normal operation; in addition, the cold and hot air for heat exchange and the noise may annoy people in surrounding areas.
18	Power cables are incorrectly provided.	Unit components may be damaged and potential safety hazard may occur.
19	Control communication cables are incorrectly provided or improperly connected.	The normal communication in the system fails or the control over IDUs and ODUs turn in a mess.
20	Control communication cables are not properly protected.	The communication cables are short-circuited or disconnected, and the unit cannot be started up due to communication failure.

Understand the special requirement (if any) for unit installation before implementation to ensure installation quality. Relevant installers must have corresponding engineering construction qualifications.

Special type operators involved in the engineering implementation, such as welders, electricians, and refrigeration mechanics must have relevant operating licenses and are accredited with vocational qualification certification.

2 Installation Materials Selection

The materials, equipment and instruments used during air conditioning engineering construction must have certifications and test reports. Products with fireproof requirements must be provided with fireproof inspection certificates and must meet national and relevant compulsory standards. If environmentally-friendly materials are to be used as required by customers, all such materials must meet national environmental protection requirement and be provided with relevant certificates.

2.1 Refrigerant Piping

(1) Material requirement: Dephosphorization drawing copper pipe for air conditioners;

(2) Appearance requirement: The inner and outer surface of pipe should be smooth without pinhole, crack, peeling, blister, inclusion, copper powder, carbon deposition, rust, dirt or severe oxide film, and without obvious scratch, pit, spot and other defects.

(3) Test report: Certifications and quality test reports must be provided.

(4) The tensile strength must be at least 240 kgf/mm².

Specifications requirement

R410A Refrigerant System		
OD (mm/inch)	Wall Thickness (mm)	Model
Φ6.35(1/4)	≥0.8	0
Φ9.52(3/8)	≥0.8	0
Φ12.70(1/2)	≥0.8	0
Φ15.9(5/8)	≥1.0	0
Φ19.05(3/4)	≥1.0	0

(5) After the inner part of the copper pipe is cleaned and dried, the inlet and outlet must be sealed tightly by using pipe caps, plugs or adhesive tapes.

2.2 Condensate Water Pipe

(1) Pipes that can be used for air conditioner drainage include: water supplying UPVC pipe, PP-R pipe, PP-C pipe, and HDG steel pipe;

(2) All relevant certificates and quality test reports are provided.

(3) Requirements for specifications and wall thickness.

Water supplying UPVC pipe: Φ32mm×2mm，Φ40mm×2mm，Φ50mm×2.5mm;

HDG steel pipe: Φ25mm×3.25mm，Φ32mm×3.25mm，Φ40mm×3.5mm，Φ50mm×3.5mm.

2.3 Insulation Material

(1) Rubber foam insulation material;

(2) Flame retardancy level: B1 or higher;

(3) Refractoriness: at least 120°C;

(4) The insulation thickness of condensate water pipe: at least 10 mm;

(5) When the diameter of copper pipe is equal to or greater than Φ15.9 mm, the thickness of insulation material should be at least 20 mm; when the diameter of copper pipe is less than 15.9 mm, the thickness of insulation material should be at least 15 mm.

2.4 Communication Cable and Control Cable

Note:

For air conditioning units installed in places with strong electromagnetic interference, shielded wire must be used as the communication cables of the IDU and wired controller, and shielded twisted pairs must be used as the communication cables between IDUs and between the IDU and ODU.

Communication cable selection for IDU and IDU(ODU)

Material	Total Length L (m) of Communication cord between Indoor Unit and Indoor (Outdoor) Unit	Wire Quantity×Size (mm²)	Material Standard	Remarks
Light/Ordinary polyvinyl chloride sheathed cord. (60227 IEC 52 /60227 IEC 53)	L≤1000	≥2×0.75	IEC 60227-5:2007	1. If the wire diameter is increased to 2 × 1 mm2, the length of the communication cord can be increased, while the total communication cord length cannot exceed 1500 m 2. The cord shall be Circular cord (the cores shall be twisted together). 3. If unit is installed in places with intense magnetic field or strong interference, it is necessary to use shielded wire.

Communication cable selection for IDU and wired controller

Material	Total length of communication wire between indoor unit and wired controller L (m)	Wire Quantity×Size (mm²)	Material standard	Remarks
Light/Ordinary polyvinyl chloride sheathed cord. (60227 IEC 52 /60227 IEC 53)	L≤250	2×0.75~2×1.25	IEC 60227-5:2007	1. Total length of communication wire cannot exceed 250m 2. The cord shall be Circular cord (the cores shall be twisted together). 3. If unit is installed in places with intense magnetic field or strong interference, it is necessary to use shielded wire

2.5 Power Cable

Only copper conductors can be used as power cables. The copper conductors must meet relevant national standard and satisfy the carrying capacity of unit.

2.6 Hanger Rod and Support

(1) Hanger rod: M8 or M10;

(2) U-steel: 14# or above;

(3) Angle steel: 30mm×30mm×3mm or above;

(4) Round steel: Φ10mm or above.

3 Installation of Indoor Unit

3.1 Installation of Floor Standing Indoor Unit

3.1.1 Outline and installation dimension

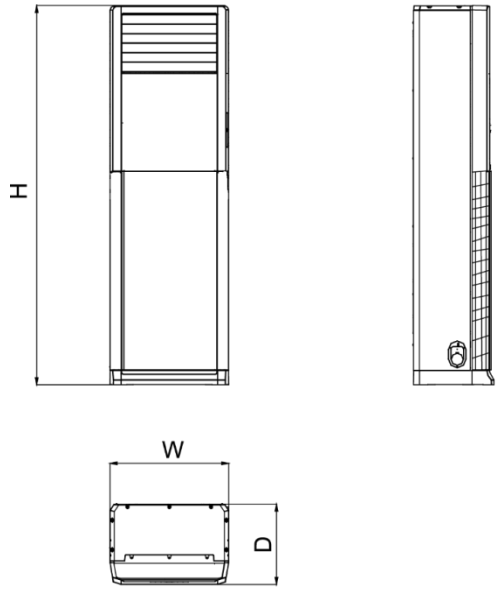

Unit: mm

Model	W	H	D
GMV-ND100L/A-T GMV-ND140L/A-T	580	1870	400

3.1.2 Installation space

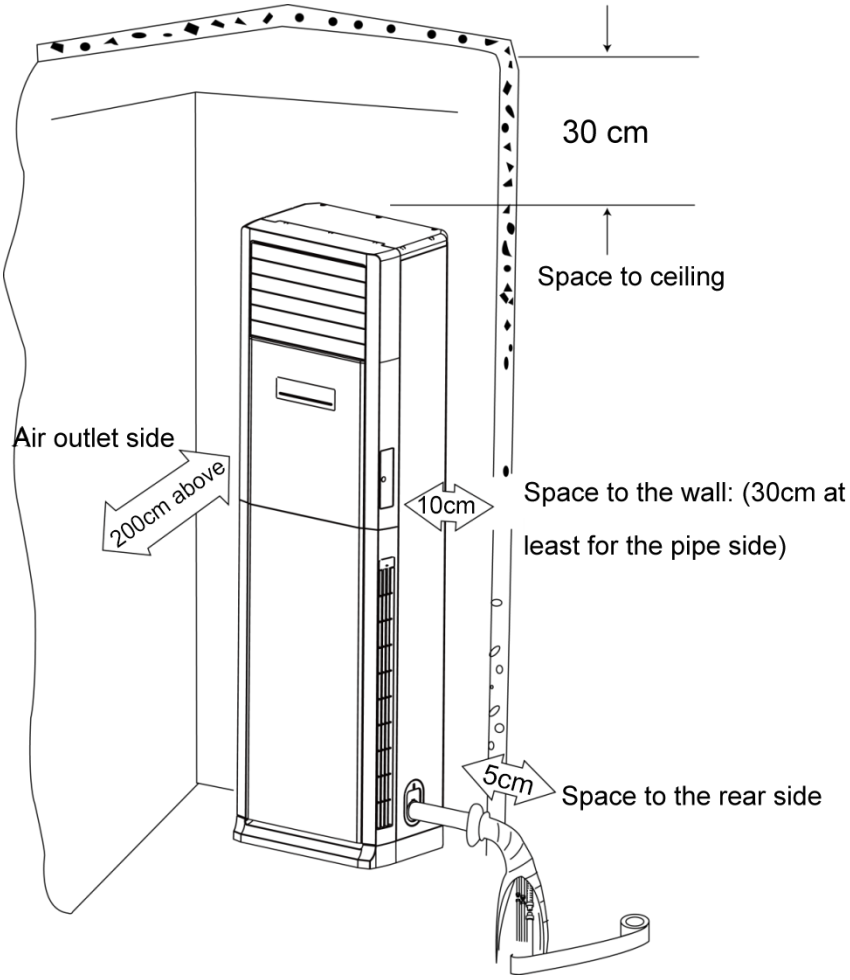

3.1.3 Installation notice

- The unit shall be installed by the professional personnel according to this installation instruction to ensure proper use.
- Please contact the local Gree appointed service center before installation. Any malfunction caused by the unit that is not installed by the Gree appointed service center would probably not be dealt with on time because of the inconvenience of the business contact.
- It should be guided under the professional personnel when the air conditioner unit is moved to other place.

3.1.4 Selection of air switch and power cord

Model	Power Cord Size	Air Switch Capacity (A)	Minimum Sectional Area of Ground Wire (mm²/AWG)	Minimum Sectional Area of Power Cord (mm²/AWG)
GMV-ND100L/A-T	220V~240V/50Hz 208V/230V/60Hz	6	1.0/AWG18	1.0/AWG18
GMV-ND140L/A-T	220V~240V/50Hz 208V/230V/60Hz	6	1.0/AWG18	1.0/AWG18

3.2 Installation of High Static Pressure Duct Type Unit

3.2.1 Outline and installation dimension

Model: GMV-ND56PHS/A-T~ GMV-ND140PHS/A-T

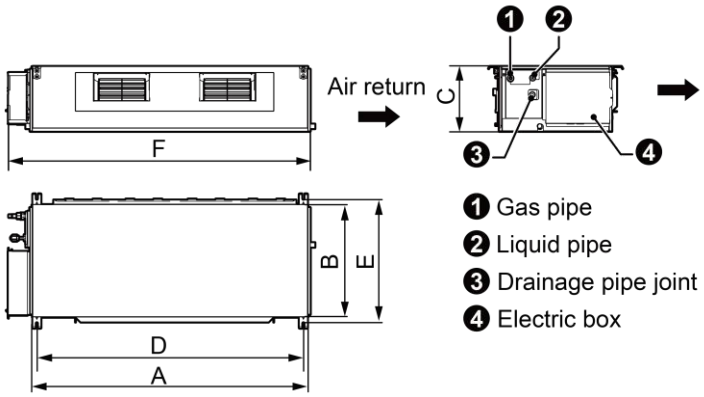

Below are dimensions of A, B, C, etc. for different models:

Unit: mm

Model	A	B	C	D	E	F
GMV-ND56PHS/A-T	1140	465	268	1100	515	1250
GMV-ND63PHS/A-T						
GMV-ND71PHS/A-T						
GMV-ND80PHS/A-T						
GMV-ND90PHS/A-T	1115	710	290	1010	750	1205
GMV-ND100PHS/A-T						
GMV-ND112PHS/A-T						
GMV-ND125PHS/A-T						
GMV-ND140PHS/A-T						

Model: GMV-ND160PHS/A-T

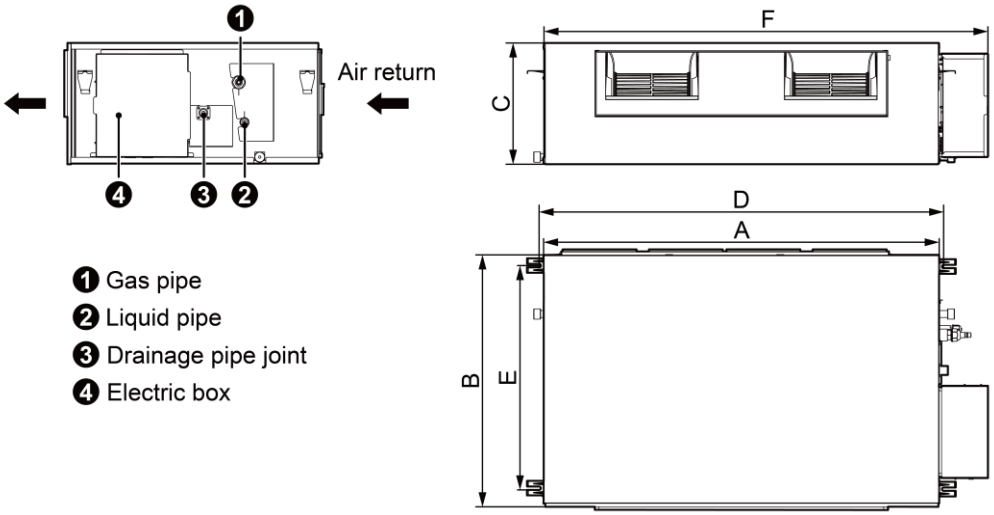

Unit: mm

Model	A	B	C	D	E	F
GMV-ND160PHS/A-T	1150	720	350	1177	646	1292

Model: GMV-ND224PH/A-T, GMV-ND280PH/A-T

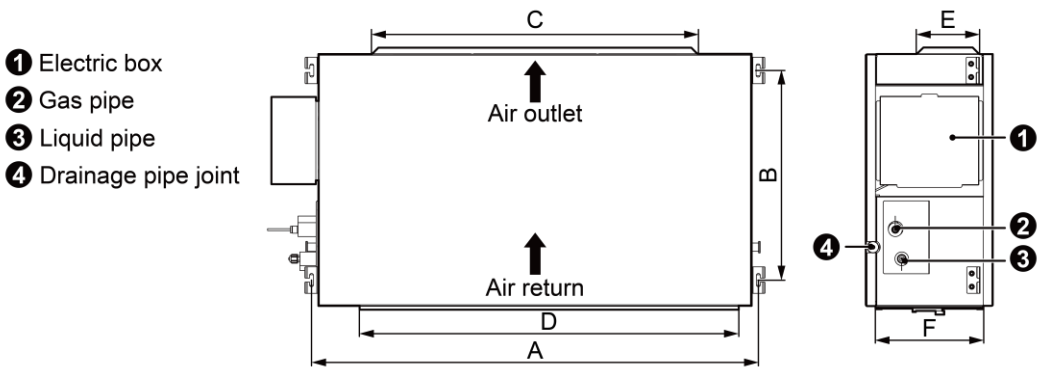

Below are dimensions of A, B, C, etc. for different models:

Unit: mm

Model	A	B	C	D	E	F
GMV-ND224PH/A-T	1353	632	992	1150	192	327
GMV-ND280PH/A-T	1563	707	992	1350	192	402

3.2.2 Installation space

GMV-ND56~140PHS/A-T

Unit: mm

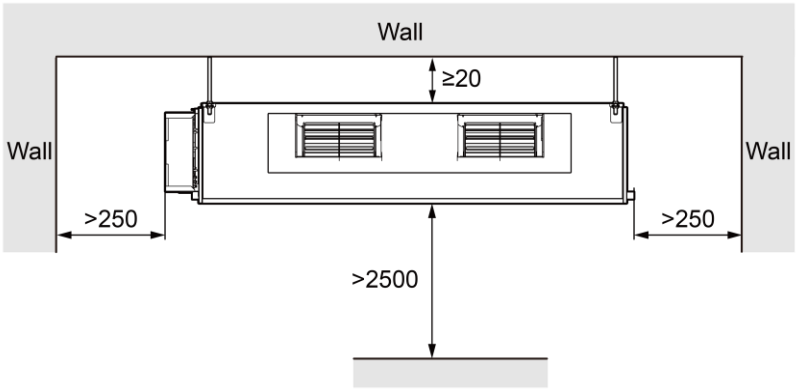

GMV-ND160PHS/A-T

Unit: mm

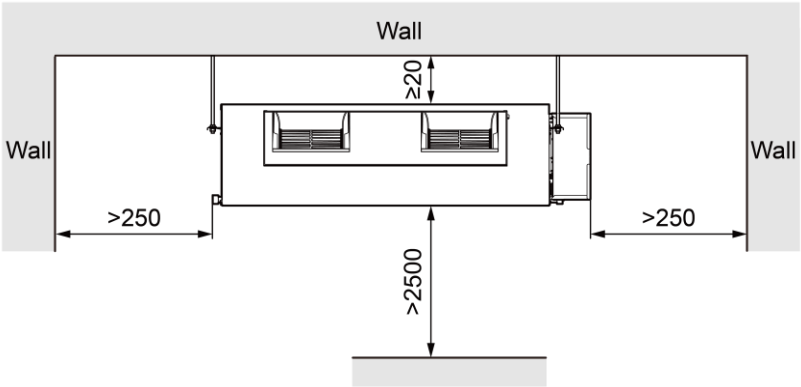

Model: GMV-ND224PH/A-T、GMV-ND280PH/A-T

Unit: mm

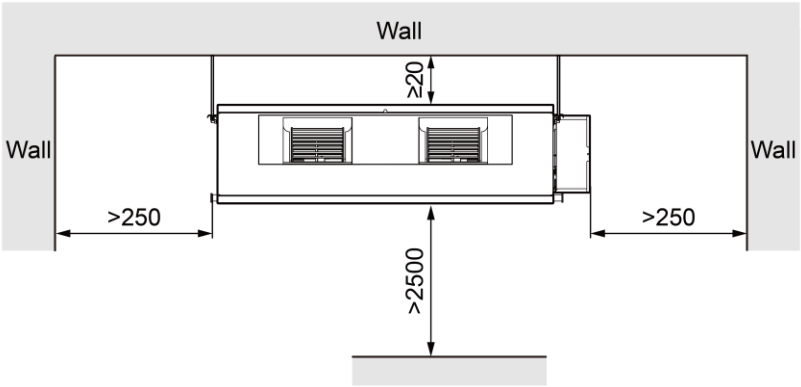

3.2.3 Installation notice

- The unit shall be installed by the professional personnel according to this installation instruction to ensure proper use.
- Please contact the local Gree appointed service center before installation. Any malfunction caused by the unit that is not installed by the Gree appointed service center would probably not be dealt with on time because of the inconvenience of the business contact.
- It should be guided under the professional personnel when the air conditioner unit is moved to other place.
- Installation of the unit must be in accordance with National Electric Codes and local regulations.
- Improper installation will affect unit's performance, so do not install the unit by yourself. Please contact local dealer to arrange professional technicians for the installation.
- Do not connect power until all installation work is finished.
- If the supply cord is damaged, it must be replaced by the manufacturer or its service agent or a similarly qualified person in order to avoid a hazard.

3.2.4 Selection of air switch and power cord

Model	Power Cord Size	Air Switch Capacity (A)	Minimum Sectional Area of Ground Wire (mm^2/AWG)	Minimum Sectional Area of Power Cord (mm^2/AWG)
GMV-ND56PHS/A-T	220-240V/50Hz 208-230V/60Hz	6	1.0/AWG18	1.0/AWG18
GMV-ND63PHS/A-T	220-240V/50Hz 208-230V/60Hz	6	1.0/AWG18	1.0/AWG18
GMV-ND71PHS/A-T	220-240V/50Hz 208-230V/60Hz	6	1.0/AWG18	1.0/AWG18
GMV-ND80PHS/A-T	220-240V/50Hz 208-230V/60Hz	6	1.0/AWG18	1.0/AWG18
GMV-ND90PHS/A-T	220-240V/50Hz 208-230V/60Hz	6	1.0/AWG18	1.0/AWG18
GMV-ND100PHS/A-T	220-240V/50Hz 208-230V/60Hz	6	1.0/AWG18	1.0/AWG18
GMV-ND112PHS/A-T	220-240V/50Hz 208-230V/60Hz	6	1.0/AWG18	1.0/AWG18
GMV-ND125PHS/A-T	220-240V/50Hz 208-230V/60Hz	6	1.0/AWG18	1.0/AWG18
GMV-ND140PHS/A-T	220~240V/50Hz 208~230V/60Hz	6	1.0/AWG18	1.0/AWG18
GMV-ND160PHS/A-T	220-240V/50Hz 208-230V/60Hz	6	1.0/AWG18	1.0/AWG18
GMV-ND224PH/A-T	220-240V/50Hz 208-230V/60Hz	10	1.0/AWG18	1.0/AWG18
GMV-ND280PH/A-T	220-240V/50Hz 208-230V/60Hz	10	1.0/AWG18	1.0/AWG18

3.3 Installation of Low Static Pressure Duct Type Unit

3.3.1 Outline and installation dimension

Model: GMV-ND22PLS/A-T~GMV-ND63PLS/A-T

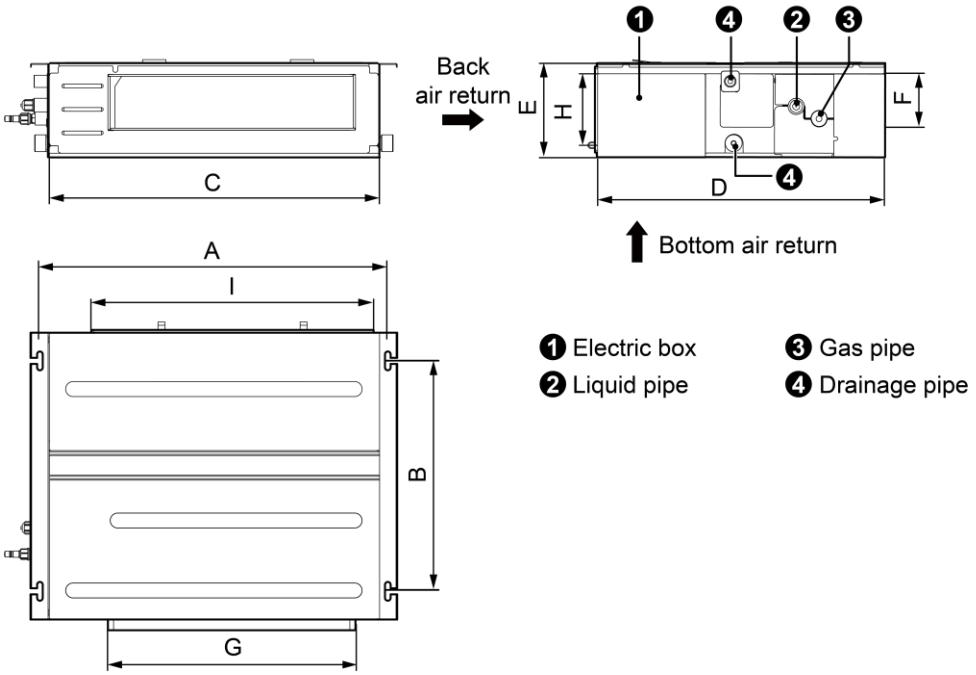

Below are dimensions of A, B, C etc. for different models:

Unit: mm

Model	A	B	C	D	E	F	G	H	I
GMV-ND22PLS/A-T	742	491	700	615	200	121	528	161	580
GMV-ND25PLS/A-T									
GMV-ND28PLS/A-T									
GMV-ND32PLS/A-T									
GMV-ND36PLS/A-T									
GMV-ND40PLS/A-T	942	491	900	615	200	121	728	161	780
GMV-ND45PLS/A-T									
GMV-ND50PLS/A-T									
GMV-ND56PLS/A-T	1142	491	1100	615	200	121	928	161	980
GMV-ND63PLS/A-T									

Model: GMV-ND71PLS/A-T~GMV-ND140PLS/A-T

Unit: mm

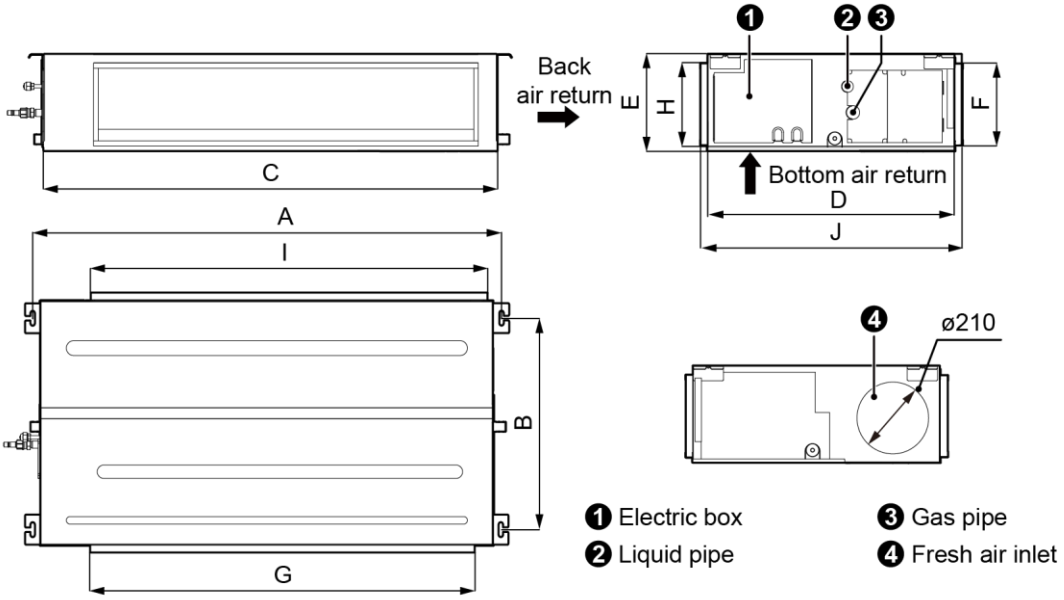

Below are dimensions of A, B, C etc. for different models:

Unit: mm

Model	A	B	C	D	E	F	G	H	I	J
GMV-ND71PLS/A-T	1236	565	1200	655	260	222	1016	220	1050	695
GMV-ND80PLS/A-T										
GMV-ND90PLS/A-T	1379	565	1340	655	260	207	1153	220	1188	716
GMV-ND100PLS/A-T										
GMV-ND112PLS/A-T										
GMV-ND125PLS/A-T										
GMV-ND140PLS/A-T										

Model: GMV-ND18PLS/C-T~GMV-ND71PLS/C-T

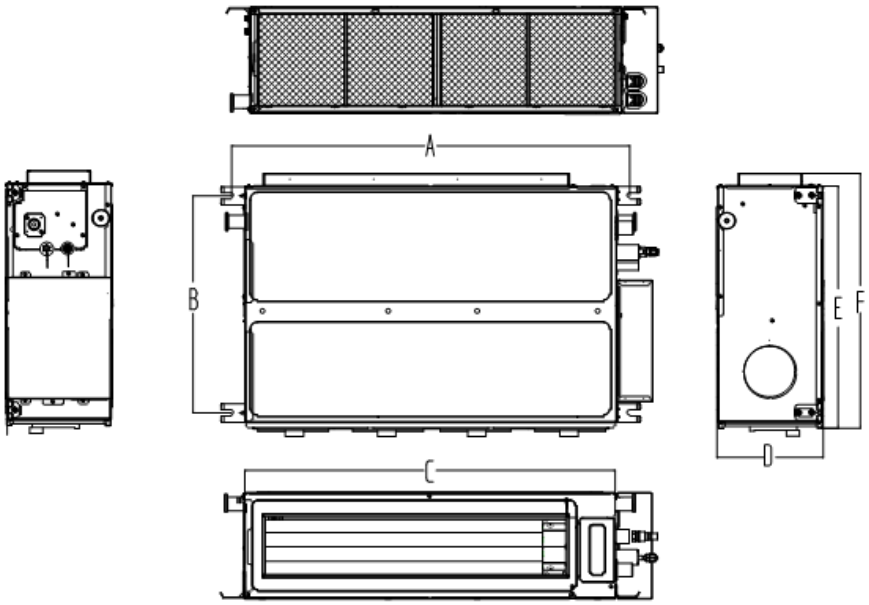

The table below lists the detailed dimensions.

Unit: mm

Model	A	B	C	D	E	F
GMV-ND18~36PLS/C-T	760	415	710	200	462	486
GMV-ND40~63PLS/C-T	1060	415	1010	200	462	486
GMV-ND71PLS/C-T	1360	415	1310	200	462	486

Model: GMV-ND80PLS/C-T~GMV-ND140PLS/C-T

Unit: mm

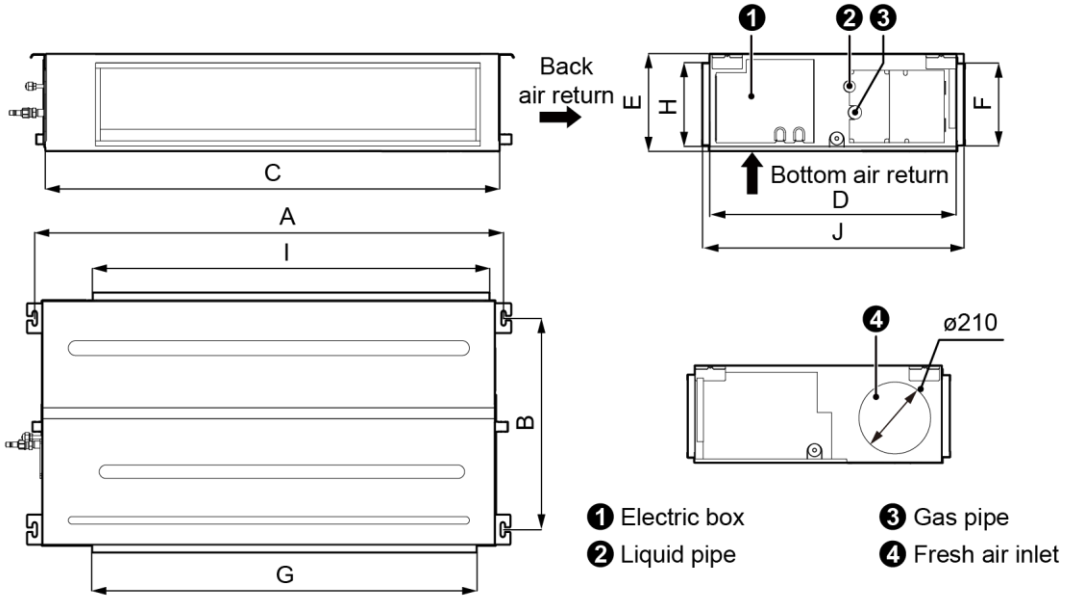

The table below lists the detailed dimensions.

Unit: mm

Model	A	B	C	D	E	F	G	H	I	J
GMV-ND80PLS/C-T	1236	565	1200	655	260	222	1016	220	1050	695
GMV-ND90PLS/C-T	1379	565	1340	655	260	207	1153	220	1188	716
GMV-ND100PLS/C-T										
GMV-ND112PLS/C-T										
GMV-ND125PLS/C-T										
GMV-ND140PLS/C-T										

Model: GMV-ND18PLS/C1-T~GMV-ND80PLS/C1-T

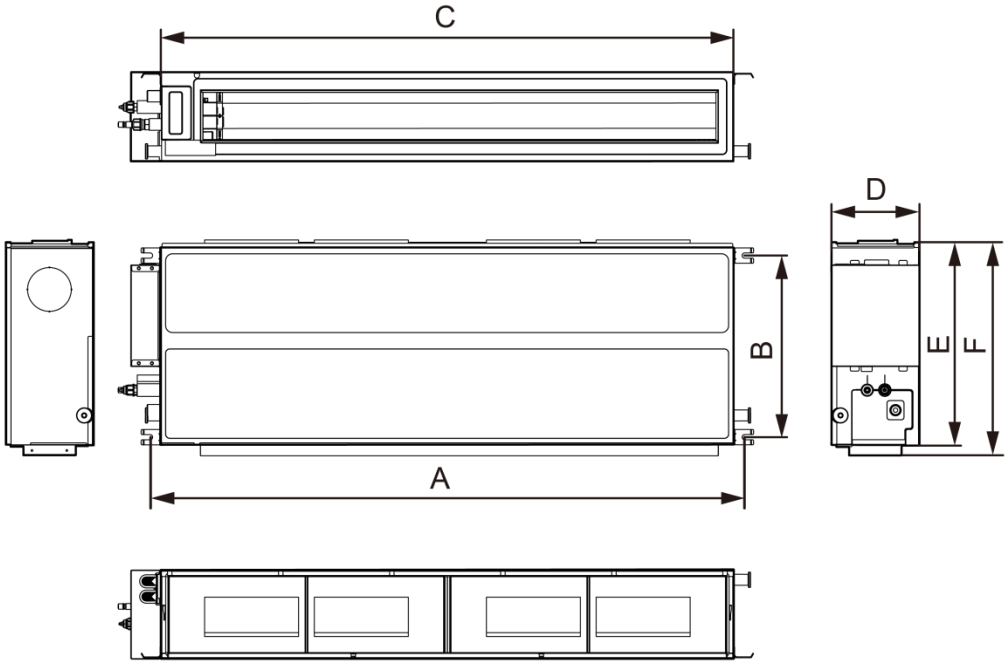

Below are dimensions of A, B, C, etc. for different models:

Unit: mm

Model	A	B	C	D	E	F
GMV-ND18~36PLS/C1-T	760	415	710	200	462	486
GMV-ND40~63PLS/C1-T	1060	415	1010	200	462	486
GMV-ND71~80PLS/C1-T	1360	415	1310	200	462	486

3.3.2 Installation space

Unit: mm

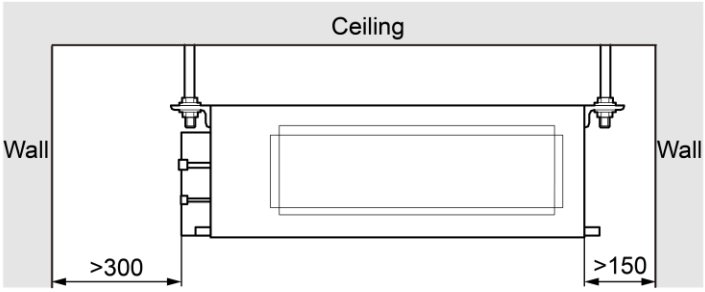

3.3.3 Installation notice

- The unit shall be installed by the professional personnel according to this installation instruction to ensure proper use.
- Please contact the local Gree appointed service center before installation. Any malfunction caused by the unit that is not installed by the Gree appointed service center would probably not be dealt with on time because of the inconvenience of the business contact.
- It should be guided under the professional personnel when the air conditioner unit is moved to other place.
- Installation of the unit must be in accordance with National Electric Codes and local regulations.
- Improper installation will affect unit’s performance, so do not install the unit by yourself. Please contact local dealer to arrange professional technicians for the installation.

◆ Do not connect power until all installation work is finished.

3.3.4 Selection of air switch and power cord

Model	Power Cord Size	Air Switch Capacity (A)	Minimum Sectional Area of Ground Wire (mm^2/AWG)	Minimum Sectional Area of Power Cord (mm^2/AWG)
GMV-ND22PLS/A-T	220-240V/50Hz 208-230V/60Hz	6	1.0/AWG18	1.0/AWG18
GMV-ND25PLS/A-T	220-240V/50Hz 208-230V/60Hz	6	1.0/AWG18	1.0/AWG18
GMV-ND28PLS/A-T	220-240V/50Hz 208-230V/60Hz	6	1.0/AWG18	1.0/AWG18
GMV-ND32PLS/A-T	220-240V/50Hz 208-230V/60Hz	6	1.0/AWG18	1.0/AWG18
GMV-ND36PLS/A-T	220-240V/50Hz 208-230V/60Hz	6	1.0/AWG18	1.0/AWG18
GMV-ND40PLS/A-T	220-240V/50Hz 208-230V/60Hz	6	1.0/AWG18	1.0/AWG18
GMV-ND45PLS/A-T	220-240V/50Hz 208-230V/60Hz	6	1.0/AWG18	1.0/AWG18
GMV-ND50PLS/A-T	220-240V/50Hz 208-230V/60Hz	6	1.0/AWG18	1.0/AWG18
GMV-ND56PLS/A-T	220-240V/50Hz 208-230V/60Hz	6	1.0/AWG18	1.0/AWG18
GMV-ND63PLS/A-T	220-240V/50Hz 208-230V/60Hz	6	1.0/AWG18	1.0/AWG18
GMV-ND71PLS/A-T	220-240V/50Hz 208-230V/60Hz	6	1.0/AWG18	1.0/AWG18
GMV-ND80PLS/A-T	220-240V/50Hz 208-230V/60Hz	6	1.0/AWG18	1.0/AWG18
GMV-ND90PLS/A-T	220-240V/50Hz 208~230V/60Hz	6	1.0/AWG18	1.0/AWG18
GMV-ND100PLS/A-T	220-240V/50Hz 208-230V/60Hz	6	1.0/AWG18	1.0/AWG18
GMV-ND112PLS/A-T	220-240V/50Hz 208-230V/60Hz	6	1.0/AWG18	1.0/AWG18
GMV-ND125PLS/A-T	220-240V/50Hz 208-230V/60Hz	6	1.0/AWG18	1.0/AWG18
GMV-ND140PLS/A-T	220-240V/50Hz 208-230V/60Hz	6	1.0/AWG18	1.0/AWG18
GMV-ND18PLS/C-T	220-240V/50Hz 208-230V/60Hz	6	1.0/AWG18	1.0/AWG18
GMV-ND22PLS/C-T	220-240V/50Hz 208-230V/60Hz	6	1.0/AWG18	1.0/AWG18
GMV-ND25PLS/C-T	220-240V/50Hz 208-230V/60Hz	6	1.0/AWG18	1.0/AWG18
GMV-ND28PLS/C-T	220-240V/50Hz 208-230V/60Hz	6	1.0/AWG18	1.0/AWG18
GMV-ND32PLS/C-T	220-240V/50Hz 208-230V/60Hz	6	1.0/AWG18	1.0/AWG18
GMV-ND36PLS/C-T	220-240V/50Hz 208-230V/60Hz	6	1.0/AWG18	1.0/AWG18
GMV-ND40PLS/C-T	220-240V/50Hz 208-230V/60Hz	6	1.0/AWG18	1.0/AWG18
GMV-ND45PLS/C-T	220-240V/50Hz 208-230V/60Hz	6	1.0/AWG18	1.0/AWG18
GMV-ND50PLS/C-T	220-240V/50Hz 208-230V/60Hz	6	1.0/AWG18	1.0/AWG18

Model	Power Cord Size	Air Switch Capacity (A)	Minimum Sectional Area of Ground Wire (mm^2/AWG)	Minimum Sectional Area of Power Cord (mm^2/AWG)
GMV-ND56PLS/C-T	220-240V/50Hz 208-230V/60Hz	6	1.0/AWG18	1.0/AWG18
GMV-ND63PLS/C-T	220-240V/50Hz 208-230V/60Hz	6	1.0/AWG18	1.0/AWG18
GMV-ND71PLS/C-T	220-240V/50Hz 208-230V/60Hz	6	1.0/AWG18	1.0/AWG18
GMV-ND80PLS/C-T	220-240V/50Hz 208-230V/60Hz	6	1.0/AWG18	1.0/AWG18
GMV-ND90PLS/C-T	220-240V/50Hz 208-230V/60Hz	6	1.0/AWG18	1.0/AWG18
GMV-ND100PLS/C-T	220-240V/50Hz 208-230V/60Hz	6	1.0/AWG18	1.0/AWG18
GMV-ND112PLS/C-T	220-240V/50Hz 208-230V/60Hz	6	1.0/AWG18	1.0/AWG18
GMV-ND125PLS/C-T	220-240V/50Hz 208-230V/60Hz	6	1.0/AWG18	1.0/AWG18
GMV-ND140PLS/C-T	220-240V/50Hz 208-230V/60Hz	6	1.0/AWG18	1.0/AWG18
GMV-ND18PLS/C1-T	220-240V/50Hz 208-230V/60Hz	6	1.0/AWG18	1.0/AWG18
GMV-ND22PLS/C1-T	220-240V/50Hz 208-230V/60Hz	6	1.0/AWG18	1.0/AWG18
GMV-ND25PLS/C1-T	220-240V/50Hz 208-230V/60Hz	6	1.0/AWG18	1.0/AWG18
GMV-ND28PLS/C1-T	220-240V/50Hz 208-230V/60Hz	6	1.0/AWG18	1.0/AWG18
GMV-ND32PLS/C1-T	220-240V/50Hz 208-230V/60Hz	6	1.0/AWG18	1.0/AWG18
GMV-ND36PLS/C1-T	220-240V/50Hz 208-230V/60Hz	6	1.0/AWG18	1.0/AWG18
GMV-ND40PLS/C1-T	220-240V/50Hz 208-230V/60Hz	6	1.0/AWG18	1.0/AWG18
GMV-ND45PLS/C1-T	220-240V/50Hz 208-230V/60Hz	6	1.0/AWG18	1.0/AWG18
GMV-ND50PLS/C1-T	220-240V/50Hz 208-230V/60Hz	6	1.0/AWG18	1.0/AWG18
GMV-ND56PLS/C1-T	220-240V/50Hz 208-230V/60Hz	6	1.0/AWG18	1.0/AWG18
GMV-ND63PLS/C1-T	220-240V/50Hz 208-230V/60Hz	6	1.0/AWG18	1.0/AWG18
GMV-ND71PLS/C1-T	220-240V/50Hz 208-230V/60Hz	6	1.0/AWG18	1.0/AWG18
GMV-ND80PLS/C1-T	220-240V/50Hz 208-230V/60Hz	6	1.0/AWG18	1.0/AWG18

3.4 Installation of 4-way Cassette Type Unit

3.4.1 Outline and installation dimension

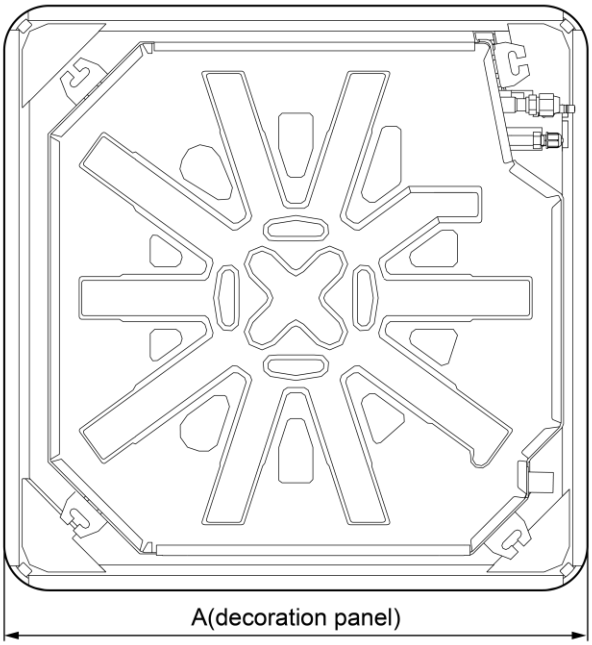

Unit: mm

Model	A
GMV-ND28~140T/A-T	950

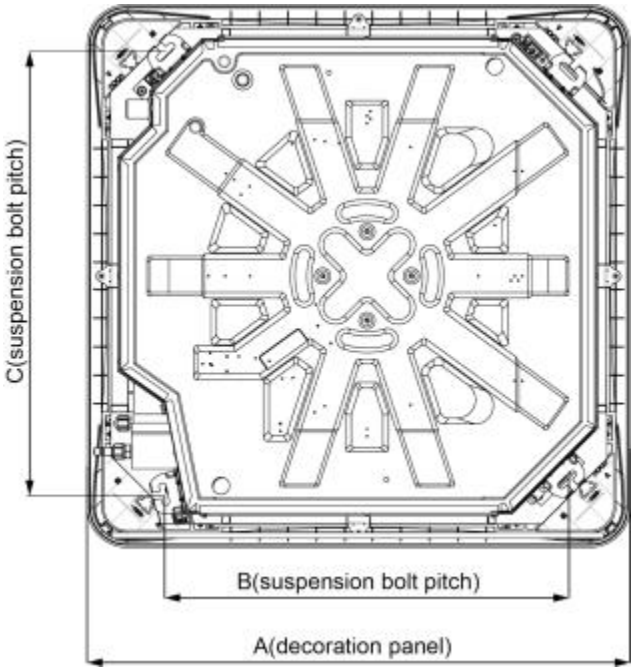

Unit: mm

Model	A	B	C
GMV-ND160T/A-T	1040	790	840

3.4.2 Installation space

Unit: mm

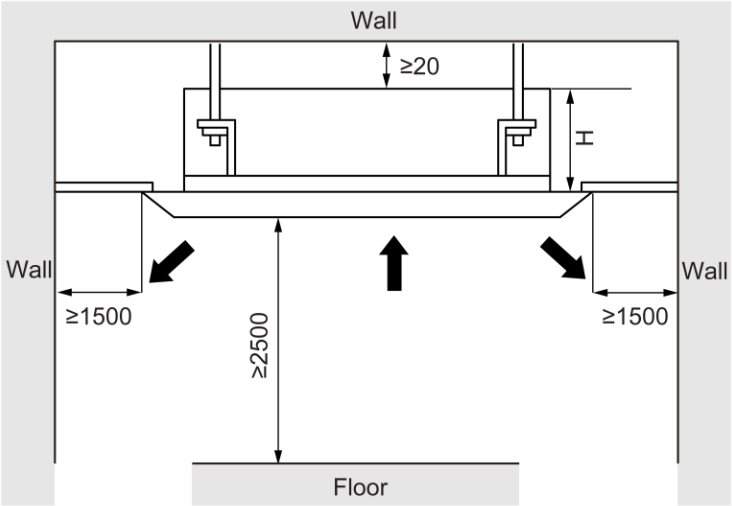

Unit: mm

Model	H
GMV-ND28~50T/A-T	220
GMV-ND56~80T/A-T	270
GMV-ND90~140T/A-T	350
GMV-ND160T/A-T	310

3.4.3 Installation notice

- The unit shall be installed by the professional personnel according to this installation instruction to ensure proper use.
- Please contact the local Gree appointed service center before installation. Any malfunction caused by the unit that is not installed by the Gree appointed service center would probably not be dealt with on time because of the inconvenience of the business contact.
- It should be guided under the professional personnel when the air conditioner unit is moved to other place.
- The unit shall be installed in accordance with national standards or local regulations.
- Only qualified personnel can carry out installation work, please contact with local dealer before installation.
- Make sure all the installation work completed before energizing.
- The appliances are not accessible to general public.

3.4.4 Selection of air switch and power cord

Model	Power Cord Size	Air Switch Capacity (A)	Minimum Sectional Area of Ground Wire (mm^2/AWG)	Minimum Sectional Area of Power Cord (mm^2/AWG)
GMV-ND28T/A-T	220-240V/50Hz 208-230V/60Hz	6	1.0/AWG18	1.0/AWG18
GMV-ND36T/A-T	220-240V/50Hz 208-230V/60Hz	6	1.0/AWG18	1.0/AWG18
GMV-ND45T/A-T	220-240V/50Hz 208-230V/60Hz	6	1.0/AWG18	1.0/AWG18

Model	Power Cord Size	Air Switch Capacity (A)	Minimum Sectional Area of Ground Wire (mm^2/AWG)	Minimum Sectional Area of Power Cord (mm^2/AWG)
GMV-ND50T/A-T	220-240V/50Hz 208-230V/60Hz	6	1.0/AWG18	1.0/AWG18
GMV-ND56T/A-T	220-240V/50Hz 208-230V/60Hz	6	1.0/AWG18	1.0/AWG18
GMV-ND63T/A-T	220-240V/50Hz 208-230V/60Hz	6	1.0/AWG18	1.0/AWG18
GMV-ND71T/A-T	220-240V/50Hz 208-230V/60Hz	6	1.0/AWG18	1.0/AWG18
GMV-ND80T/A-T	220-240V/50Hz 208-230V/60Hz	6	1.0/AWG18	1.0/AWG18
GMV-ND90T/A-T	220-240V/50Hz 208-230V/60Hz	6	1.0/AWG18	1.0/AWG18
GMV-ND100T/A-T	220-240V/50Hz 208-230V/60Hz	6	1.0/AWG18	1.0/AWG18
GMV-ND112T/A-T	220-240V/50Hz 208-230V/60Hz	6	1.0/AWG18	1.0/AWG18
GMV-ND125T/A-T	220-240V/50Hz 208-230V/60Hz	6	1.0/AWG18	1.0/AWG18
GMV-ND140T/A-T	220-240V/50Hz 208-230V/60Hz	6	1.0/AWG18	1.0/AWG18
GMV-ND160T/A-T	220-240V/50Hz 208-230V/60Hz	6	1.0/AWG18	1.0/AWG18

3.5 Installation of Compact 4-way Cassette Type Unit

3.5.1 Outline and installation dimension

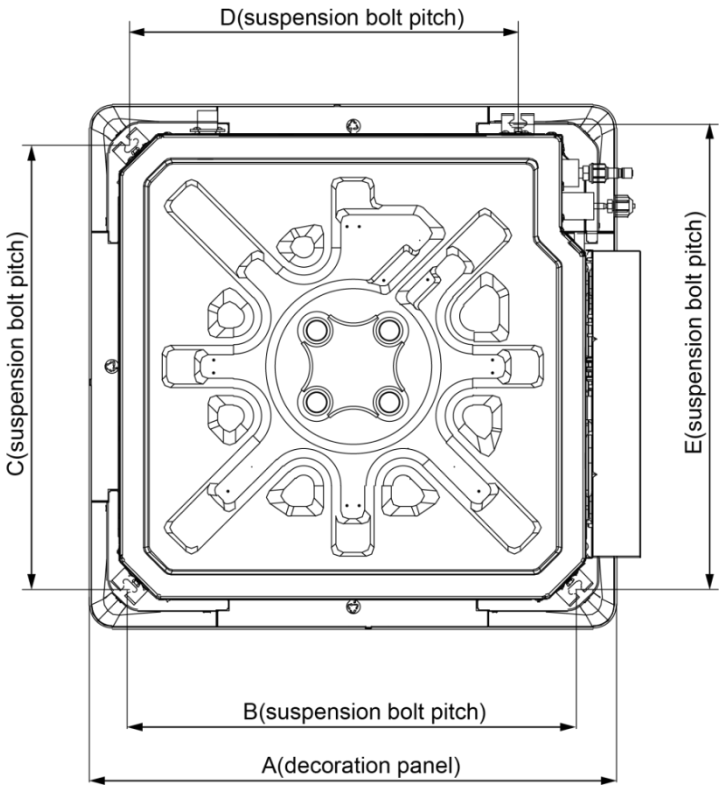

Below are dimensions of A, B, C etc. for different models:

Unit: mm

Model	A	B	C	D	E
GMV-ND22T/B-T	670	570	570	495	600
GMV-ND28T/B-T					
GMV-ND36T/B-T					
GMV-ND45T/B-T					
GMV-ND50T/B-T					
GMV-ND56T/B-T					

3.5.2 Installation space

Unit: mm

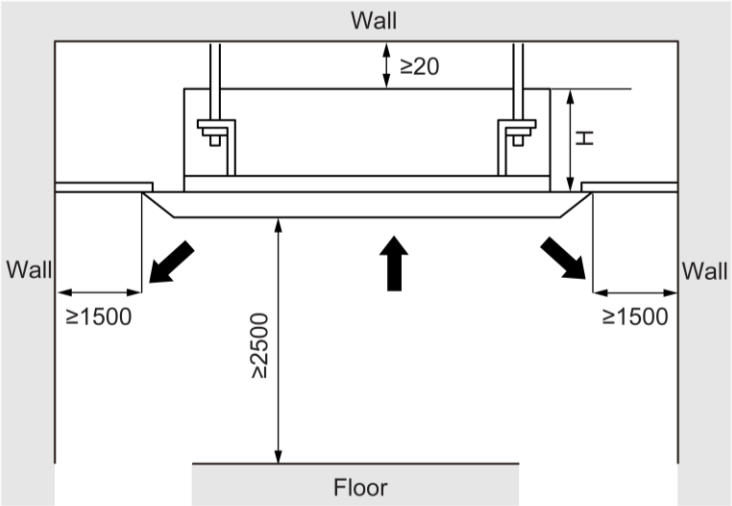

Unit: mm

Model	H
GMV-ND22T/B-T	255
GMV-ND28T/B-T	255
GMV-ND36T/B-T	255
GMV-ND45T/B-T	255
GMV-ND50T/B-T	255
GMV-ND56T/B-T	255

3.5.3 Installation notice

- The unit shall be installed by the professional personnel according to this installation instruction to ensure proper use.
- Please contact the local Gree appointed service center before installation. Any malfunction caused by the unit that is not installed by the Gree appointed service center would probably not be dealt with on time because of the inconvenience of the business contact.
- It should be guided under the professional personnel when the air conditioner unit is moved to other place.
- The unit shall be installed in accordance with national standards or local regulations.
- Only qualified personnel can carry out installation work, please contact with local dealer before installation.
- Make sure all the installation work completed before energizing.

3.5.4 Selection of air switch and power cord

Model	Power Cord Size	Air Switch Capacity (A)	Minimum Sectional Area of Ground Wire (mm²/AWG)	Minimum Sectional Area of Power Cord (mm²/AWG)
GMV-ND22T/B-T	220-240V/50Hz 208-230V/60Hz	6	1.0/AWG18	1.0/AWG18
GMV-ND28T/B-T	220-240V/50Hz 208-230V/60Hz	6	1.0/AWG18	1.0/AWG18
GMV-ND36T/B-T	220-240V/50Hz 208-230V/60Hz	6	1.0/AWG18	1.0/AWG18
GMV-ND45T/B-T	220-240V/50Hz 208-230V/60Hz	6	1.0/AWG18	1.0/AWG18
GMV-ND50T/B-T	220-240V/50Hz 208-230V/60Hz	6	1.0/AWG18	1.0/AWG18
GMV-ND56T/B-T	220-240V/50Hz 208-230V/60Hz	6	1.0/AWG18	1.0/AWG18

3.6 Installation of 360°Air Discharge Compact Cassette Type Unit

3.6.1 Outline and installation dimension

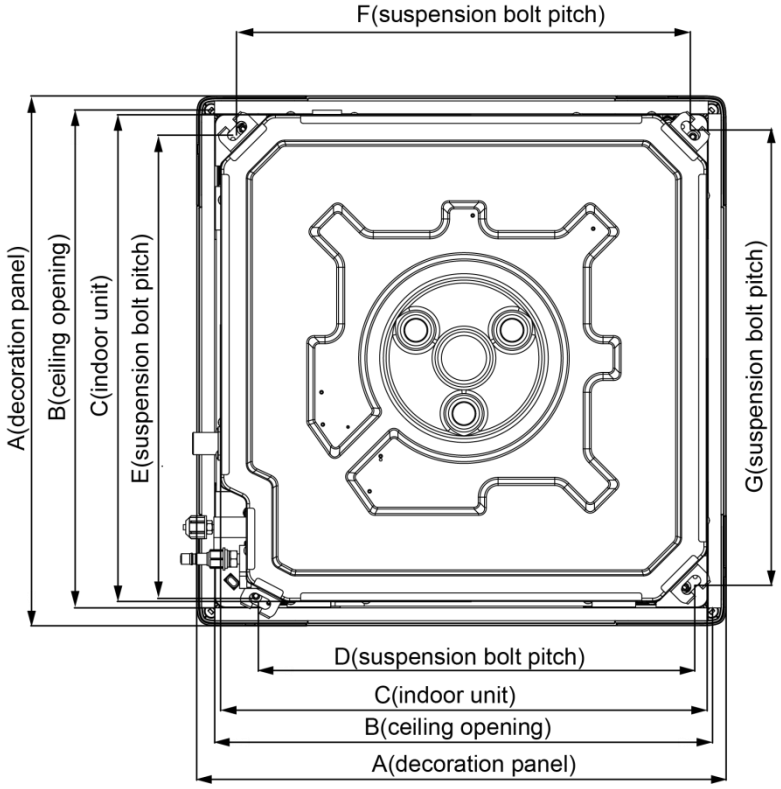

Unit: mm

Model	A	B	C	D	E	F	G
GMV-ND15T/E-T	620	580	570	505	550	530	530
GMV-ND18T/E-T							
GMV-ND22T/E-T							
GMV-ND28T/E-T							
GMV-ND36T/E-T							
GMV-ND45T/E-T							
GMV-ND50T/E-T							
GMV-ND56T/E-T							

3.6.2 Installation space

Unit: mm

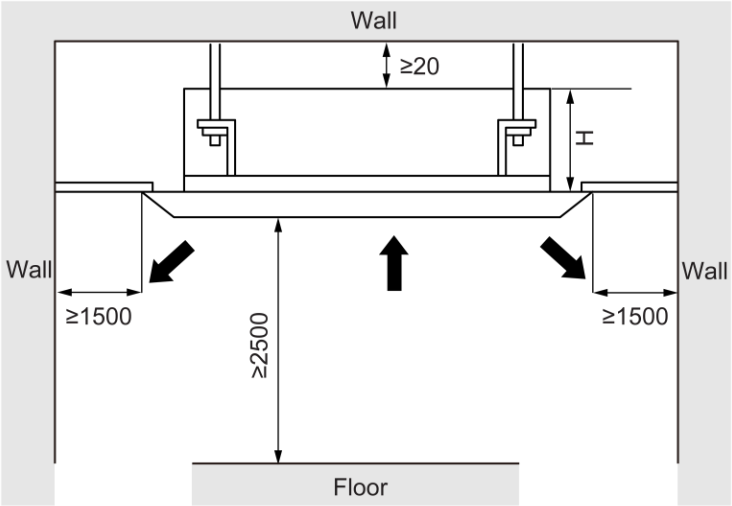

Unit: mm

Model	H
GMV-ND15T/E-T	305
GMV-ND18T/E-T	305
GMV-ND22T/E-T	305
GMV-ND28T/E-T	305
GMV-ND36T/E-T	305
GMV-ND45T/E-T	305
GMV-ND50T/E-T	305
GMV-ND56T/E-T	305

3.6.3 Installation notice

- The unit shall be installed by the professional personnel according to this installation instruction to ensure proper use.
- Please contact the local Gree appointed service center before installation. Any malfunction caused by the unit that is not installed by the Gree appointed service center would probably not be dealt with on time because of the inconvenience of the business contact.
- It should be guided under the professional personnel when the air conditioner unit is moved to other place.
- The unit shall be installed in accordance with national standards or local regulations.
- Only qualified personnel can carry out installation work, please contact with local dealer before installation.
- Make sure all the installation work completed before energizing.

3.6.4 Selection of air switch and power cord

Model	Power Cord Size	Air Switch Capacity (A)	Minimum Sectional Area of Ground Wire (mm²/AWG)	Minimum Sectional Area of Power Cord (mm²/AWG)
GMV-ND15T/E-T	220-240V/50Hz 208-230V/60Hz	6	1.0/AWG18	1.0/AWG18
GMV-ND18T/E-T	220-240V/50Hz 208-230V/60Hz	6	1.0/AWG18	1.0/AWG18
GMV-ND22T/E-T	220-240V/50Hz 208-230V/60Hz	6	1.0/AWG18	1.0/AWG18
GMV-ND28T/E-T	220-240V/50Hz 208-230V/60Hz	6	1.0/AWG18	1.0/AWG18
GMV-ND36T/E-T	220-240V/50Hz 208-230V/60Hz	6	1.0/AWG18	1.0/AWG18
GMV-ND45T/E-T	220-240V/50Hz 208-230V/60Hz	6	1.0/AWG18	1.0/AWG18
GMV-ND50T/E-T	220-240V/50Hz 208-230V/60Hz	6	1.0/AWG18	1.0/AWG18
GMV-ND56T/E-T	220-240V/50Hz 208-230V/60Hz	6	1.0/AWG18	1.0/AWG18

3.7 Installation of Compact 2-way Cassette Type Unit

3.7.1 Outline and installation dimension

Unit: mm

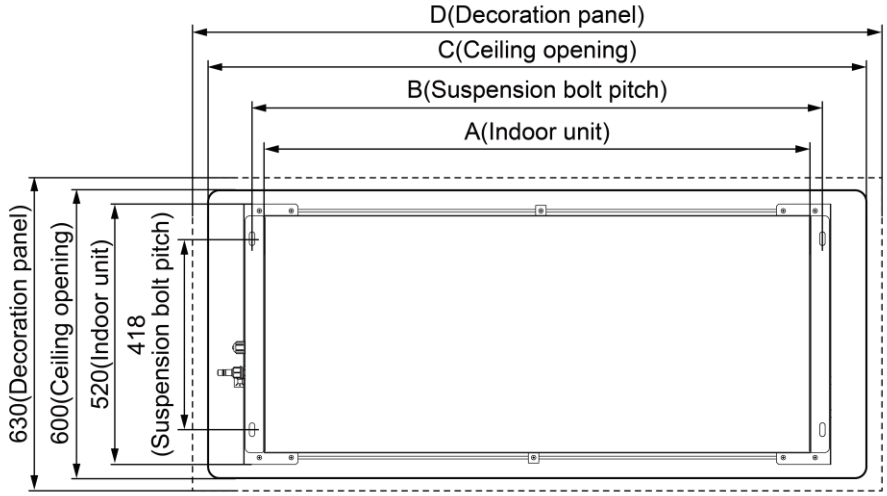

Below are dimensions of A, B, C etc. for different models:

Unit: mm

Model	Indoor unit(A)	Suspension bolt pitch(B)	Ceiling opening(C)	Decoration panel(D)	Outer diameter of connection pipe(mm)	
					Liquid pipe	Gas pipe
GMV-ND28TS/A-T	1200	1252	1386	1416	6.35	9.52
GMV-ND36TS/A-T GMV-ND45TS/A-T GMV-ND50TS/A-T	1200	1252	1386	1416	6.35	12.7
GMV-ND56TS/A-T GMV-ND63TS/A-T GMV-ND71TS/A-T	1200	1252	1386	1416	9.52	15.9

Unit: mm

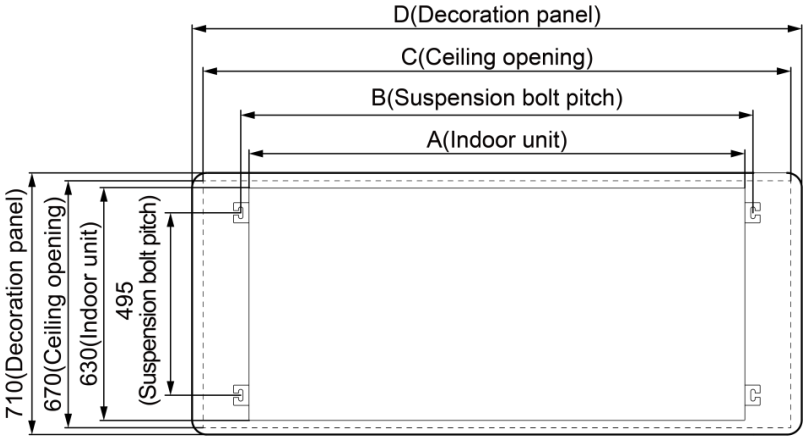

Below are dimensions of A, B, C etc. for different models:

Unit: mm

Model	Indoor unit(A)	Suspension bolt pitch(B)	Ceiling opening(C)	Decoration panel(D)	Outer diameter of connection pipe	
					Liquid pipe	Gas pipe
GMV-ND28TS/B-T	790	834	990	1100	6.35	9.52
GMV-ND36TS/B-T GMV-ND45TS/B-T GMV-ND50TS/B-T	790	834	990	1100	6.35	12.7
GMV-ND56TS/B-T GMV-ND63TS/B-T GMV-ND71TS/B-T GMV-ND80TS/B-T	790	834	990	1100	9.52	15.9

3.7.2 Installation space

GMV-ND**TS/A-T:

Unit: mm

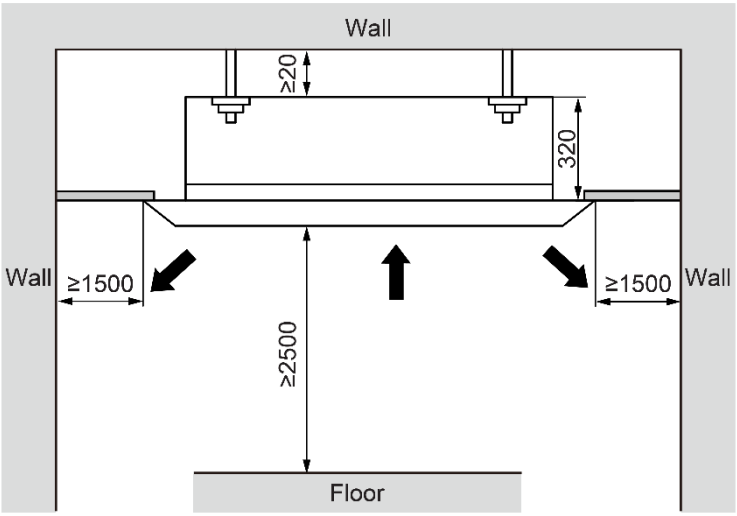

GMV-ND**TS/B-T:

Unit: mm

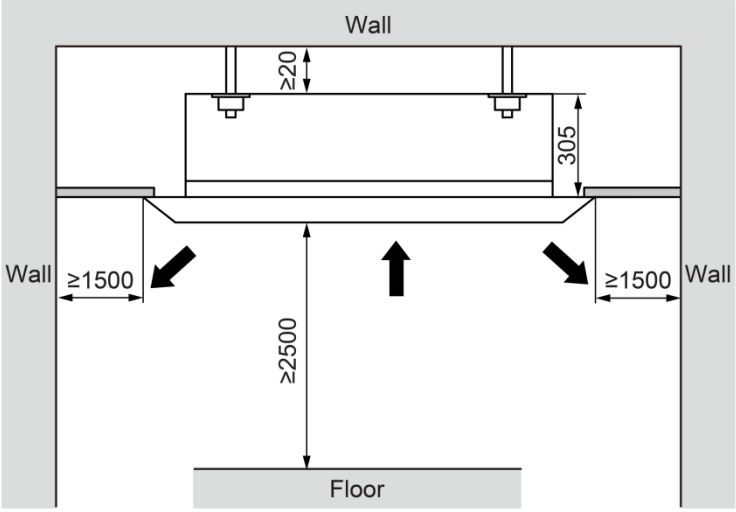

3.7.3 Installation notice

- The unit shall be installed by the professional personnel according to this installation instruction to ensure proper use.
- Please contact the local Gree appointed service center before installation. Any malfunction caused by the unit that is not installed by the Gree appointed service center would probably not be dealt with on time because of the inconvenience of the business contact.
- It should be guided under the professional personnel when the air conditioner unit is moved to other place.
- The unit shall be installed in accordance with national standards or local regulations.
- Only qualified personnel can carry out installation work, please contact with local dealer before installation.
- Make sure all the installation work completed before energizing.

3.7.4 Selection of air switch and power cord

Model	Power Cord Size	Air Switch Capacity(A)	Minimum Sectional Area of Ground Wire (mm²/AWG)	Minimum Sectional Area of Power Cord (mm²/AWG)
GMV-ND28TS/A-T	220-240V/50Hz 208-230V/60Hz	6	1.0/AWG18	1.0/AWG18
GMV-ND36TS/A-T	220-240V/50Hz 208-230V/60Hz	6	1.0/AWG18	1.0/AWG18
GMV-ND45TS/A-T	220-240V/50Hz 208-230V/60Hz	6	1.0/AWG18	1.0/AWG18
GMV-ND50TS/A-T	220-240V/50Hz 208-230V/60Hz	6	1.0/AWG18	1.0/AWG18
GMV-ND56TS/A-T	220-240V/50Hz 208-230V/60Hz	6	1.0/AWG18	1.0/AWG18
GMV-ND63TS/A-T	220-240V/50Hz 208-230V/60Hz	6	1.0/AWG18	1.0/AWG18
GMV-ND71TS/A-T	220-240V/50Hz 208-230V/60Hz	6	1.0/AWG18	1.0/AWG18

Model	Power Cord Size	Air Switch Capacity(A)	Minimum Sectional Area of Ground Wire (mm²/AWG)	Minimum Sectional Area of Power Cord (mm²/AWG)
GMV-ND28TS/B-T	220-240V/50Hz 208-230V/60Hz	6	1.0/AWG18	1.0/AWG18
GMV-ND36TS/B-T	220-240V/50Hz 208-230V/60Hz	6	1.0/AWG18	1.0/AWG18
GMV-ND45TS/B-T	220-240V/50Hz 208-230V/60Hz	6	1.0/AWG18	1.0/AWG18
GMV-ND50TS/B-T	220-240V/50Hz 208-230V/60Hz	6	1.0/AWG18	1.0/AWG18
GMV-ND56TS/B-T	220-240V/50Hz 208-230V/60Hz	6	1.0/AWG18	1.0/AWG18
GMV-ND63TS/B-T	220-240V/50Hz 208-230V/60Hz	6	1.0/AWG18	1.0/AWG18
GMV-ND71TS/B-T	220-240V/50Hz 208-230V/60Hz	6	1.0/AWG18	1.0/AWG18
GMV-ND80TS/B-T	220-240V/50Hz 208-230V/60Hz	6	1.0/AWG18	1.0/AWG18

3.8 Installation of Compact 1-way Cassette Type Unit

3.8.1 Outline and installation dimension

GMV-ND**TD/A-T：

Uint：mm

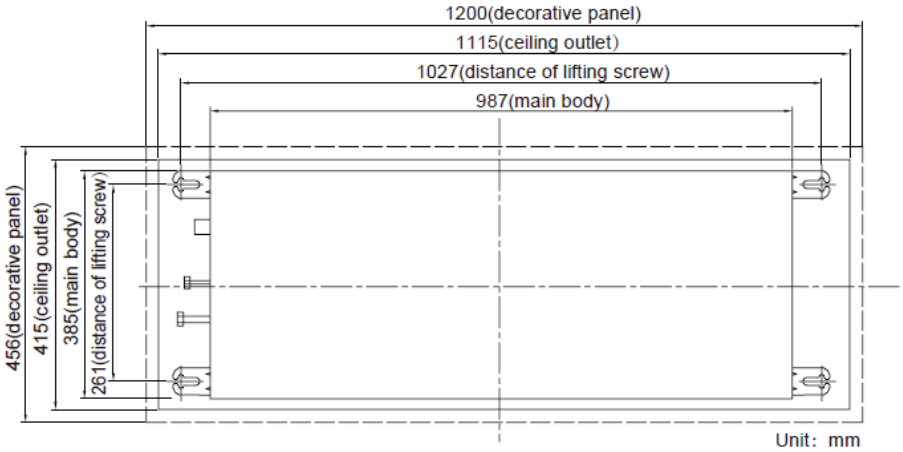

GMV-ND**TD/B-T：

Uint：mm

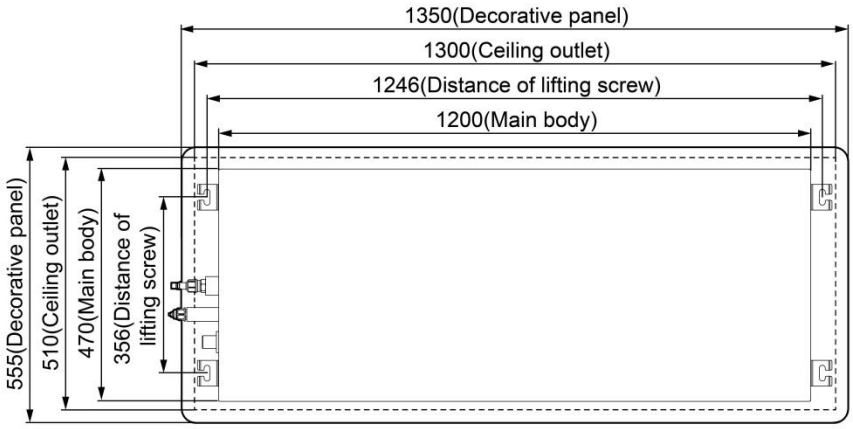

3.8.2 Installation space

GMV-ND**TD/A-T：

Uint：mm

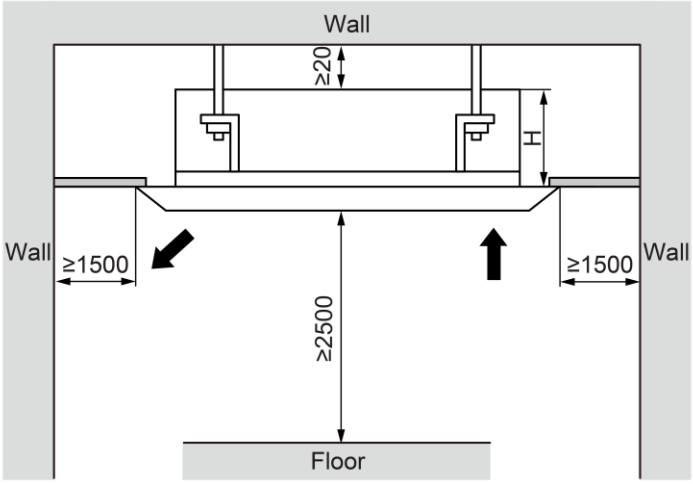

Models:	H(mm)
GMV-ND22~56TD/A-T	207

GMV-ND**TD/B-T：

Uint：mm

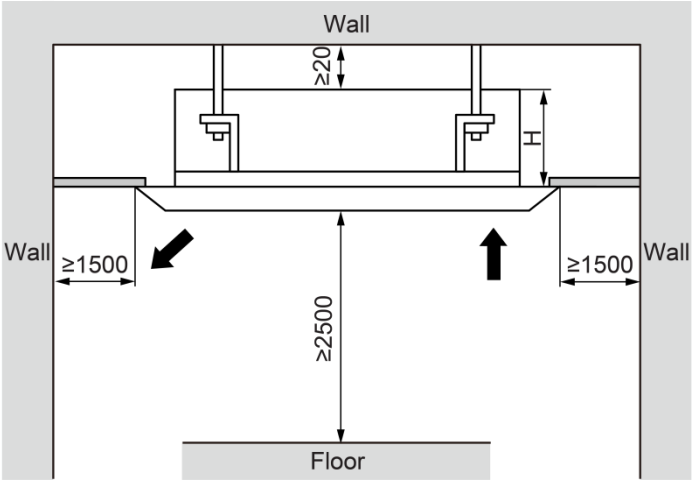

Models:	H(mm)
GMV-ND63~80TD/B-T	200

3.8.3 Installation notice

- The unit shall be installed by the professional personnel according to this installation instruction to ensure proper use.
- Please contact the local Gree appointed service center before installation. Any malfunction caused by the unit that is not installed by the Gree appointed service center would probably not be dealt with on time because of the inconvenience of the business contact.
- It should be guided under the professional personnel when the air conditioner unit is moved to other place.
- The unit shall be installed in accordance with national standards or local regulations.

- Only qualified personnel can carry out installation work, please contact with local dealer before installation.
- Make sure all the installation work completed before energizing.

3.8.4 Selection of air switch and power cord

Model	Power Cord Size	Air Switch Capacity (A)	Minimum Sectional Area of Ground Wire (mm²/AWG)	Minimum Sectional Area of Power Cord (mm²/AWG)
GMV-ND22TD/A-T	220-240V/50Hz 208-230V/60Hz	6	1.0/AWG18	1.0/AWG18
GMV-ND28TD/A-T	220-240V/50Hz 208-230V/60Hz	6	1.0/AWG18	1.0/AWG18
GMV-ND36TD/A-T	220-240V/50Hz 208-230V/60Hz	6	1.0/AWG18	1.0/AWG18
GMV-ND45TD/A-T	220-240V/50Hz 208-230V/60Hz	6	1.0/AWG18	1.0/AWG18
GMV-ND50TD/A-T	220-240V/50Hz 208-230V/60Hz	6	1.0/AWG18	1.0/AWG18
GMV-ND56TD/A-T	220-240V/50Hz 208-230V/60Hz	6	1.0/AWG18	1.0/AWG18
GMV-ND63TD/B-T	220-240V/50Hz 208-230V/60Hz	6	1.0/AWG18	1.0/AWG18
GMV-ND71TD/B-T	220-240V/50Hz 208-230V/60Hz	6	1.0/AWG18	1.0/AWG18
GMV-ND80TD/B-T	220-240V/50Hz 208-230V/60Hz	6	1.0/AWG18	1.0/AWG18

3.9 Installation of Floor Ceiling Type Unit

3.9.1 Outline and installation dimension

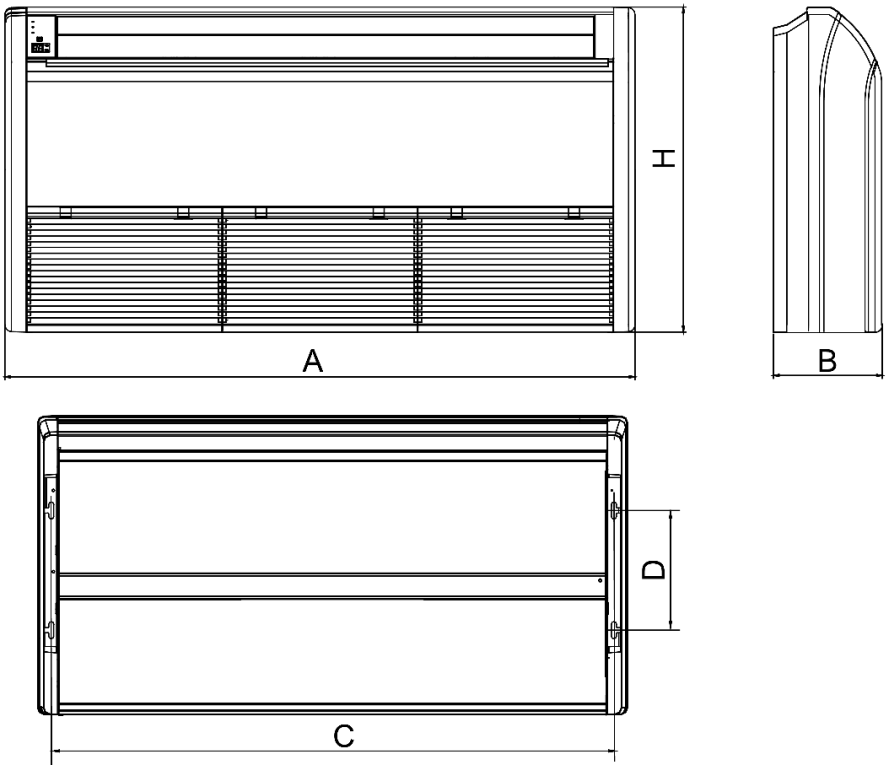

Below are dimensions of A, B, C, etc. for different models:

Unit: mm

Model	A	B	C	D	H	Drainage pipe(Outer Diameter × wall thickness)	Outer diameter of connection pipe	
							Liquid pipe	Gas pipe
GMV-ND28ZD/A-T	1220	225	1158	280	700	Φ17×1.75	6.35	9.52
GMV-ND36ZD/A-T GMV-ND50ZD/A-T							6.35	12.7
GMV-ND56ZD/A-T							9.52	15.9
GMV-ND63ZD/A-T GMV-ND71ZD/A-T GMV-ND90ZD/A-T	1420	245	1354	280	700		9.52	15.9
GMV-ND112ZD/A-T GMV-ND125ZD/A-T GMV-ND140ZD/A-T	1700	245	1634	280	700		9.52	15.9
GMV-ND160ZD/A-T							9.52	19.05

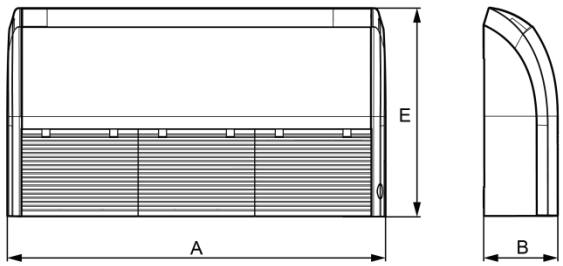

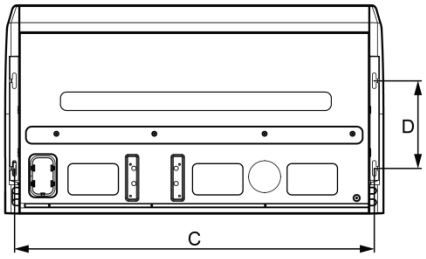

Below are dimensions of A, B, C, etc. for different models:

Models	A (mm)	B (mm)	C (mm)	D (mm)	E (mm)	Drainage pipe(Outer Diameter × wall thickness) (mm)	Outer diameter of connection pipe(mm)	
							Liquid pipe	Gas pipe
GMV-ND28ZD/B-T	870	235	812	280	665	Φ17×1.75	6.35	9.52
GMV-ND36ZD/B-T GMV-ND50ZD/B-T							6.35	12.7
GMV-ND56ZD/B-T							9.52	15.9
GMV-ND63ZD/B-T GMV-ND71ZD/B-T GMV-ND90ZD/B-T	1200	235	1142	280	665		9.52	15.9
GMV-ND112ZD/B-T GMV-ND125ZD/B-T GMV-ND140ZD/B-T	1570	235	1512	280	665		9.52	15.9
GMV-ND160ZD/B-T							9.52	19.05

3.9.2 Installation space

Unit: mm

GMV-ND**ZD/A-T：

◆ Floor type

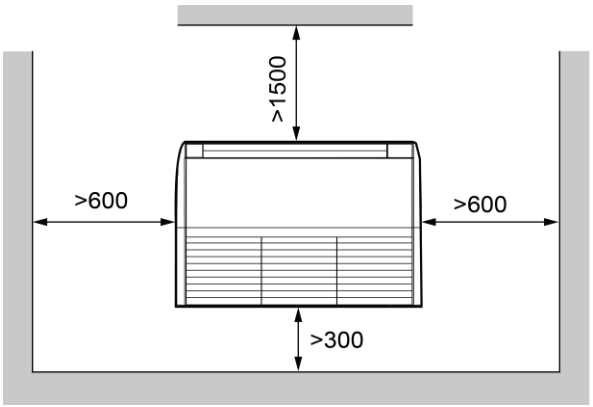

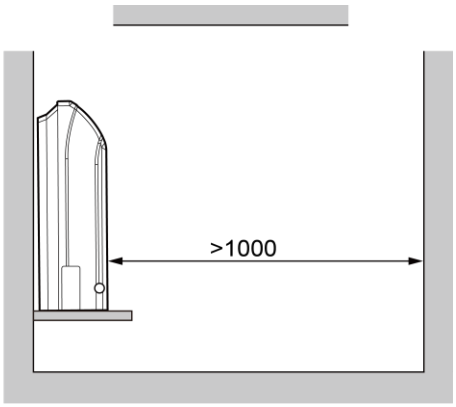

◆ Ceiling type

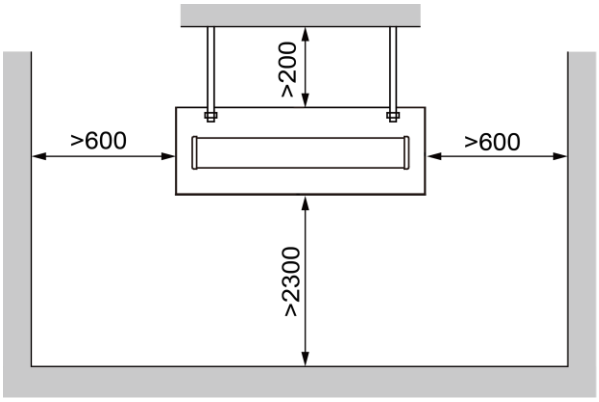

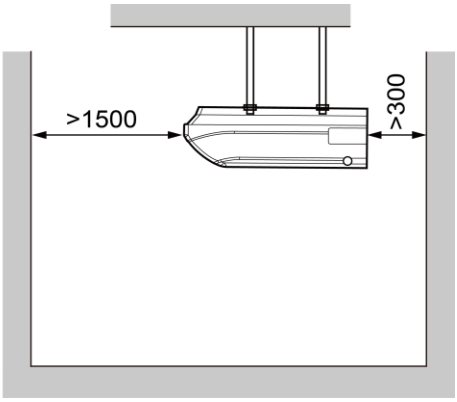

GMV-ND**ZD/B-T：

◆ Floor type

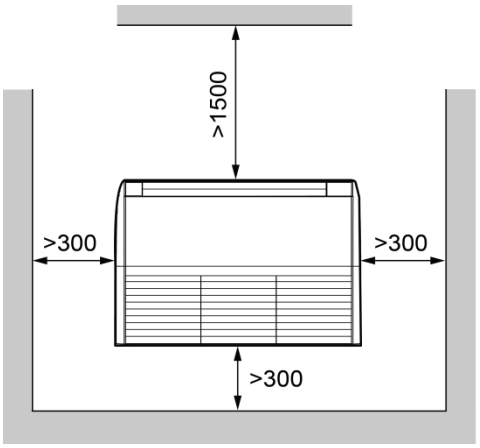

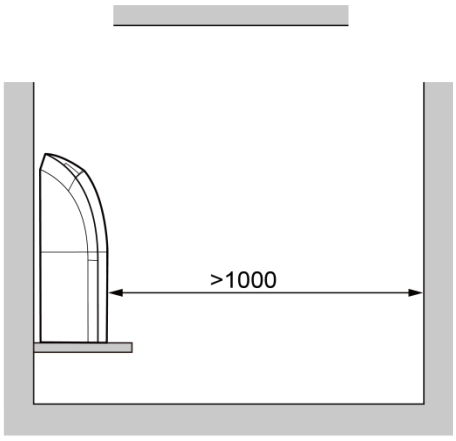

- Ceiling type

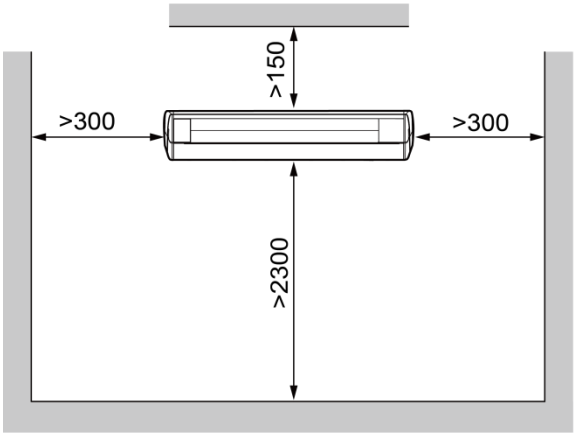

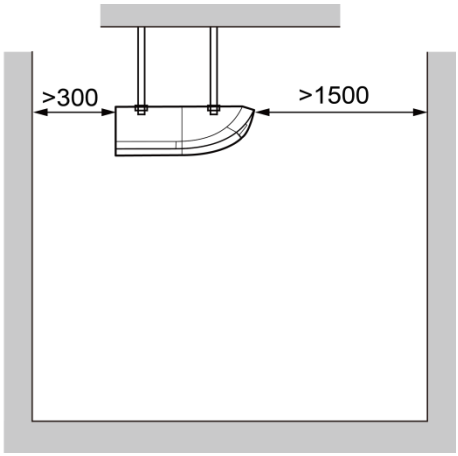

3.9.3 Installation notice

- The unit shall be installed by the professional personnel according to this installation instruction to ensure proper use.
- Please contact the local Gree appointed service center before installation. Any malfunction caused by the unit that is not installed by the Gree appointed service center would probably not be dealt with on time because of the inconvenience of the business contact.
- It should be guided under the professional personnel when the air conditioner unit is moved to other place.
- The unit shall be installed in accordance with national standards or local regulations.
- Only qualified personnel can carry out installation work, please contact with local dealer before installation.
- Make sure all the installation work completed before energizing.

3.9.4 Selection of air switch and power cord

Model	Power Cord Size	Air Switch capacity (A)	Minimum Sectional Area of Ground Wire (mm²/AWG)	Minimum Sectional Area of Power Cord (mm²/AWG)
GMV-ND28ZD/A-T	220-240V/50Hz 208-230V/60Hz	6	1.0/AWG18	1.0/AWG18
GMV-ND36ZD/A-T	220-240V/50Hz 208-230V/60Hz	6	1.0/AWG18	1.0/AWG18
GMV-ND50ZD/A-T	220-240V/50Hz 208-230V/60Hz	6	1.0/AWG18	1.0/AWG18
GMV-ND56ZD/A-T	220-240V/50Hz 208-230V/60Hz	6	1.0/AWG18	1.0/AWG18
GMV-ND63ZD/A-T	220-240V/50Hz 208-230V/60Hz	6	1.0/AWG18	1.0/AWG18
GMV-ND71ZD/A-T	220-240V/50Hz 208-230V/60Hz	6	1.0/AWG18	1.0/AWG18
GMV-ND90ZD/A-T	220-240V/50Hz 208-230V/60Hz	6	1.0/AWG18	1.0/AWG18
GMV-ND112ZD/A-T	220-240V/50Hz 208-230V/60Hz	6	1.0/AWG18	1.0/AWG18
GMV-ND125ZD/A-T	220-240V/50Hz 208-230V/60Hz	6	1.0/AWG18	1.0/AWG18

Model	Power Cord Size	Air Switch capacity (A)	Minimum Sectional Area of Ground Wire (mm^2/AWG)	Minimum Sectional Area of Power Cord (mm^2/AWG)
GMV-ND140ZD/A-T	220-240V/50Hz 208-230V/60Hz	6	1.0/AWG18	1.0/AWG18
GMV-ND160ZD/A-T	220-240V/50Hz 208-230V/60Hz	6	1.0/AWG18	1.0/AWG18

Model	Power Supply	Circuit Breaker Capacity (A)	Minimum Sectional Area of Ground Wire (mm^2/AWG)	Minimum Sectional Area of Power Cord (mm^2/AWG)
GMV-ND28ZD/B-T	220-240V/50Hz 208-230V/60Hz	6	1.0/AWG18	1.0/AWG18
GMV-ND36ZD/B-T	220-240V/50Hz 208-230V/60Hz	6	1.0/AWG18	1.0/AWG18
GMV-ND50ZD/B-T	220-240V/50Hz 208-230V/60Hz	6	1.0/AWG18	1.0/AWG18
GMV-ND56ZD/B-T	220-240V/50Hz 208-230V/60Hz	6	1.0/AWG18	1.0/AWG18
GMV-ND63ZD/B-T	220-240V/50Hz 208-230V/60Hz	6	1.0/AWG18	1.0/AWG18
GMV-ND71ZD/B-T	220-240V/50Hz 208-230V/60Hz	6	1.0/AWG18	1.0/AWG18
GMV-ND90ZD/B-T	220-240V/50Hz 208-230V/60Hz	6	1.0/AWG18	1.0/AWG18
GMV-ND112ZD/B-T	220-240V/50Hz 208-230V/60Hz	6	1.0/AWG18	1.0/AWG18
GMV-ND125ZD/B-T	220-240V/50Hz 208-230V/60Hz	6	1.0/AWG18	1.0/AWG18
GMV-ND140ZD/B-T	220-240V/50Hz 208-230V/60Hz	6	1.0/AWG18	1.0/AWG18
GMV-ND160ZD/B-T	220-240V/50Hz 208-230V/60Hz	6	1.0/AWG18	1.0/AWG18

3.10 Installation of Fresh air Processing Unit

3.10.1 Outline and installation dimension

GMV-NX140P/A(X1.2)-K

Unit: mm

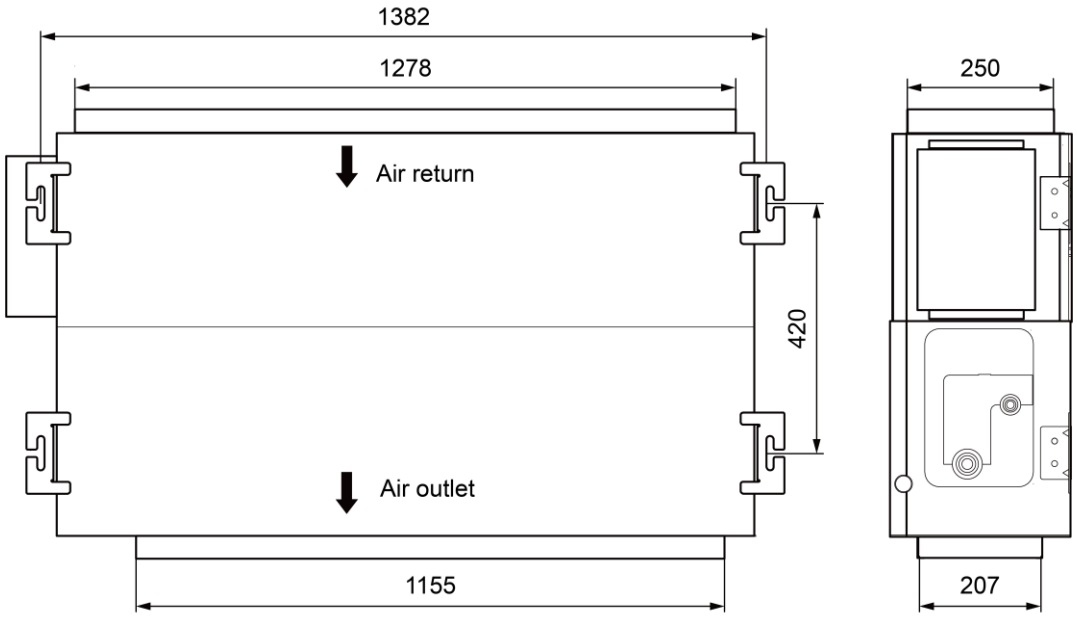

GMV-NX224P/A(X2.0)-M; GMV-NX280P/A(X2.5)-M; GMV-NX280P/A(X3.0)-M

Unit: mm

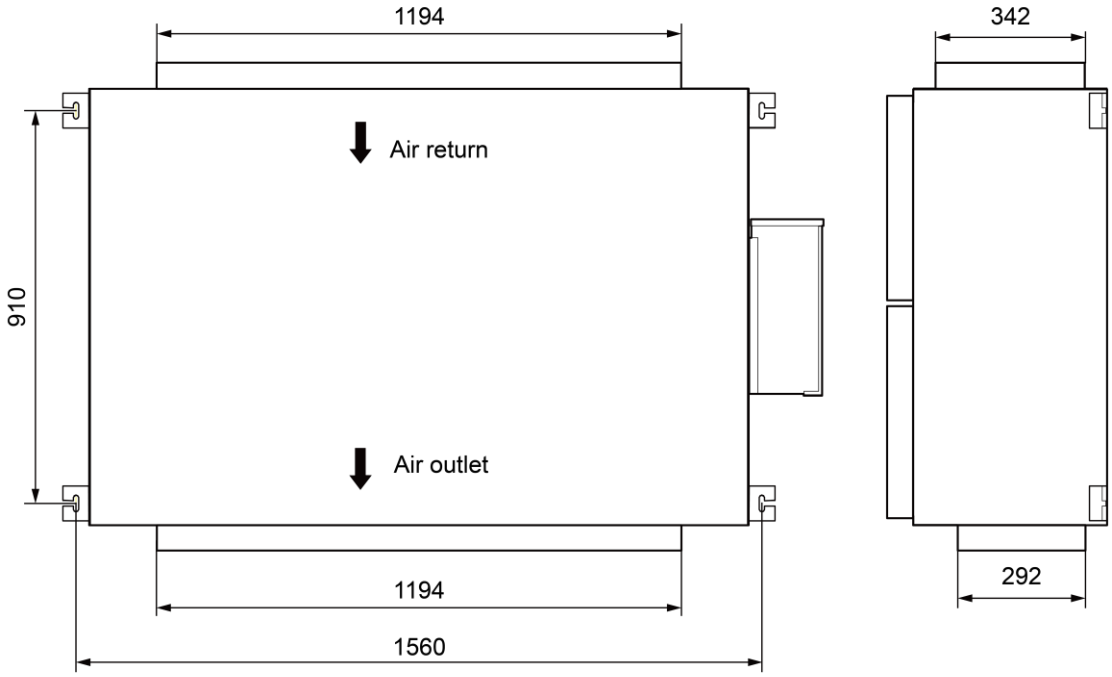

GMV-NX450P/A(X4.0)-M

Unit: mm

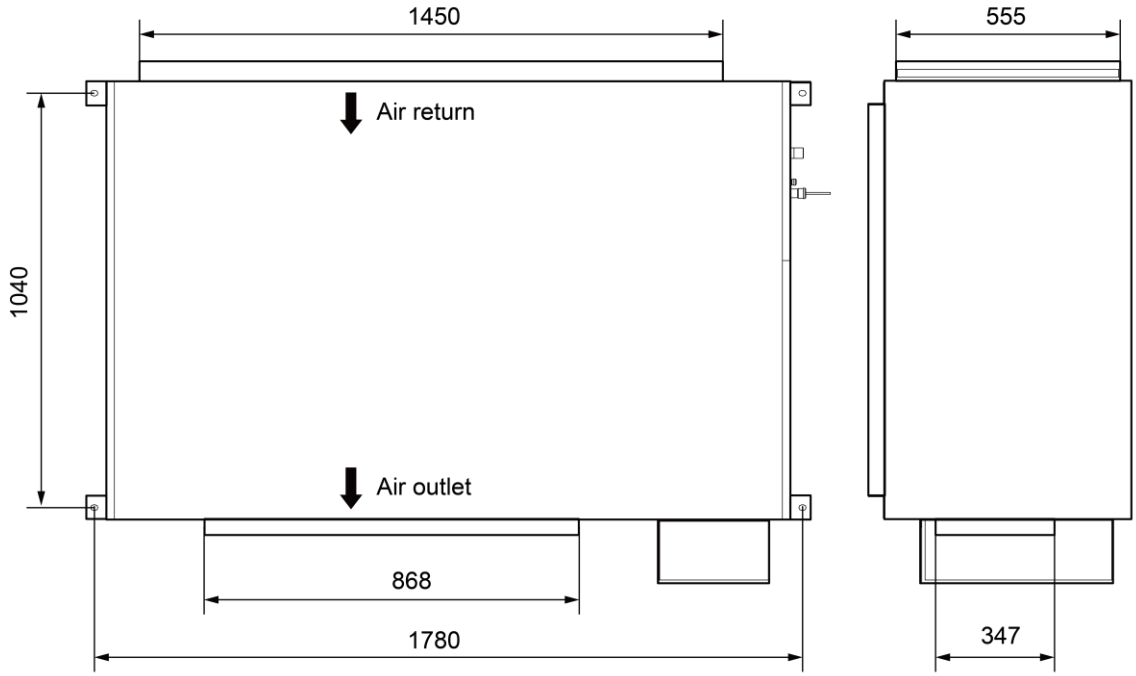

GMV-NDX125P/A-T、GMV-NDX140P/A-T

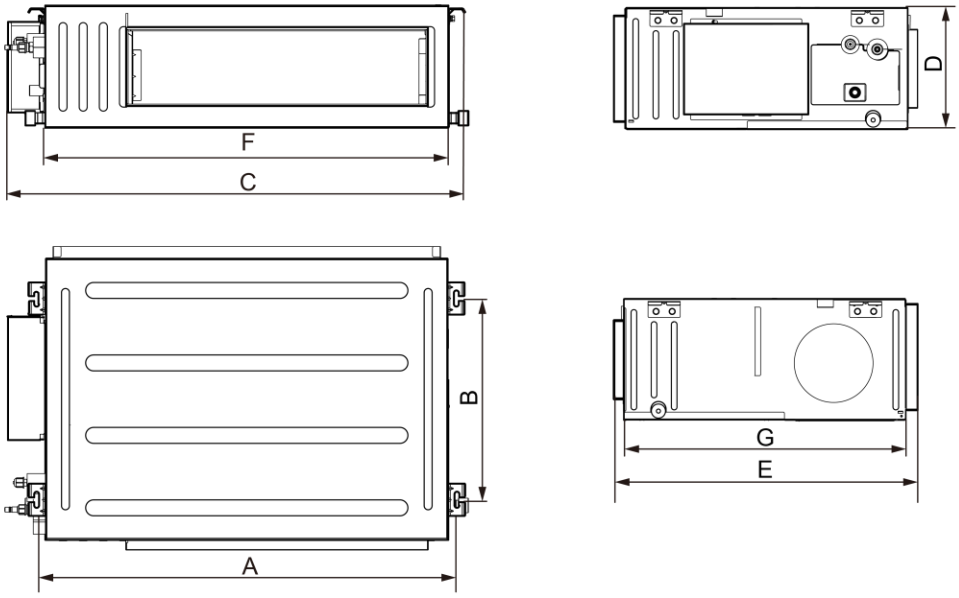

The table below lists the detailed dimensions.

Unit: mm

Model	A	B	C	D	E	F	G
GMV-NDX125P/A-T	1440	500	1530	300	754	1400	700
GMV-NDX140P/A-T	1440	500	1530	300	754	1400	700

GMV-NDX224P/A-T、GMV-NDX250P/A-T 、GMV-NDX280P/A-T

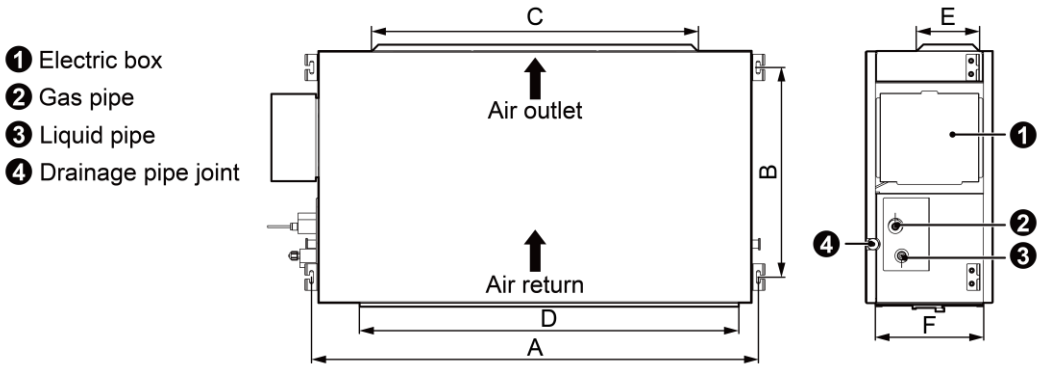

The table below lists the detailed dimensions.

Unit: mm

Model	A	B	C	D	E	F
GMV-NDX224P/A-T	1353	632	992	1150	192	327
GMV-NDX250P/A-T	1353	632	992	1150	192	327
GMV-NDX280P/A-T	1353	632	992	1150	192	327

3.10.2 Installation space

Unit: mm

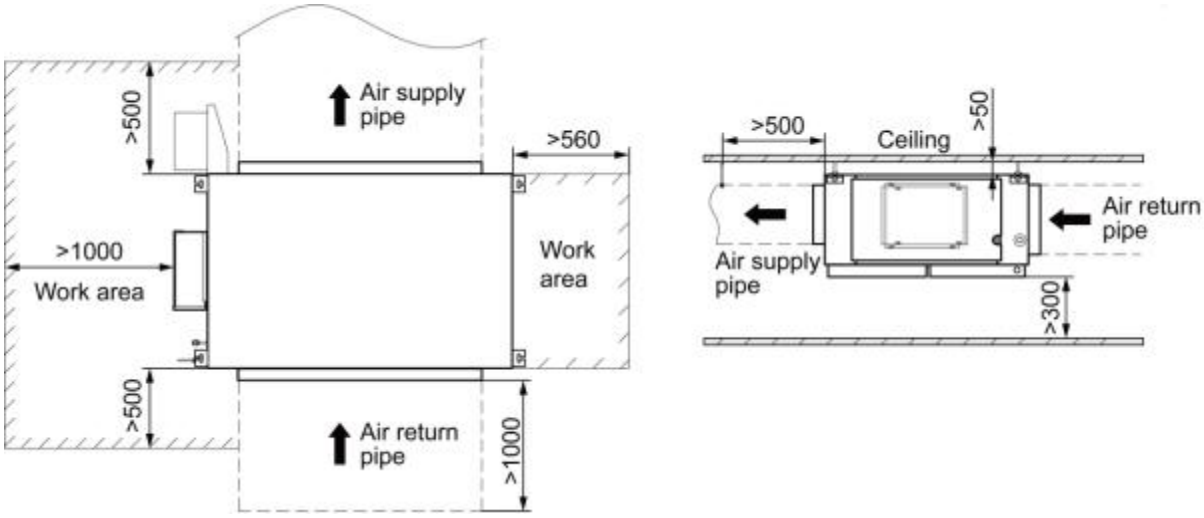

Notes:

① Installation of the unit must be in accordance with National Electric Codes and local safety regulations.

② Improper installation will affect unit's performance, so do not install the unit by yourself. Please contact local dealer to arrange professional technicians for the installation.

③ Do not connect power until all installation work is finished.

3.10.3 Installation notice

- The unit shall be installed by the professional personnel according to this installation instruction to ensure proper use.
- Please contact the local Gree appointed service center before installation. Any malfunction caused by the unit that is not installed by the Gree appointed service center would probably not be dealt with on time because of the inconvenience of the business contact.
- It should be guided under the professional personnel when the air conditioner unit is moved to other place.

3.10.4 Selection of air switch and power cord

Model	Power Cord Size	Air Switch capacity (A)	Minimum Sectional Area of Ground Wire (mm²/AWG)	Minimum Sectional Area of Power Cord (mm²/AWG)
GMV-NX140P/A(X1.2)-K	220-240V~50Hz	6	1.0/AWG18	1.0/AWG18
GMV-NX224P/A(X2.0)-M	380-415V 3N~50Hz	6	1.0/AWG18	1.0/AWG18
GMV-NX280P/A(X2.5)-M	380-415V 3N~50Hz	6	1.0/AWG18	1.0/AWG18
GMV-NX280P/A(X3.0)-M	380-415V 3N~50Hz	6	1.0/AWG18	1.0/AWG18
GMV-NX450P/A(X4.0)-M	380-415V 3N~50Hz	6	1.0/AWG18	1.0/AWG18
GMV-NDX125P/A-T	220-240V ~50Hz 208-230V ~60Hz	6	1.0/AWG18	1.0/AWG18
GMV-NDX140P/A-T	220-240V ~50Hz 208-230V ~60Hz	6	1.0/AWG18	1.0/AWG18
GMV-NDX224P/A-T	220-240V ~50Hz 208-230V ~60Hz	10	1.0/AWG18	1.0/AWG18
GMV-NDX250P/A-T	220-240V ~50Hz 208-230V ~60Hz	10	1.0/AWG18	1.0/AWG18
GMV-NDX280P/A-T	220-240V ~50Hz 208-230V ~60Hz	10	1.0/AWG18	1.0/AWG18

3.11 Installation of Slim Duct Type Unit

3.11.1 Outline and installation dimension

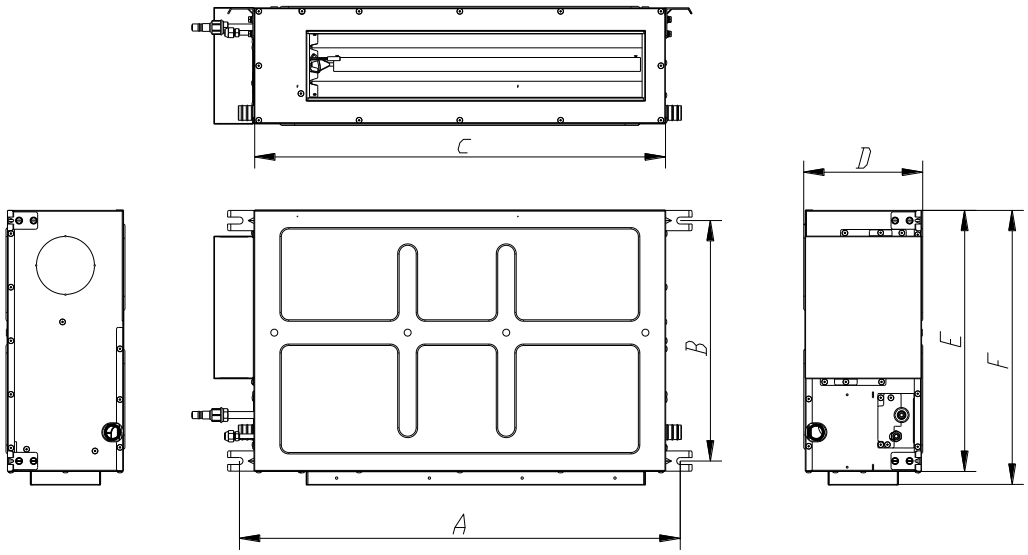

Unit: mm

Model	A	B	C	D	E	F
GMV-ND22~36PL/B-T GMV-ND22~36PLS/B1-T	760	415	710	200	450	475
GMV-ND40~63PL/B-T GMV-ND40~63PLS/B1-T	1060	415	1010	200	450	475
GMV-ND72PL/B-T GMV-ND40~63PLS/B1-T	1360	415	1310	200	450	475

3.11.2 Installation space

Unit: mm

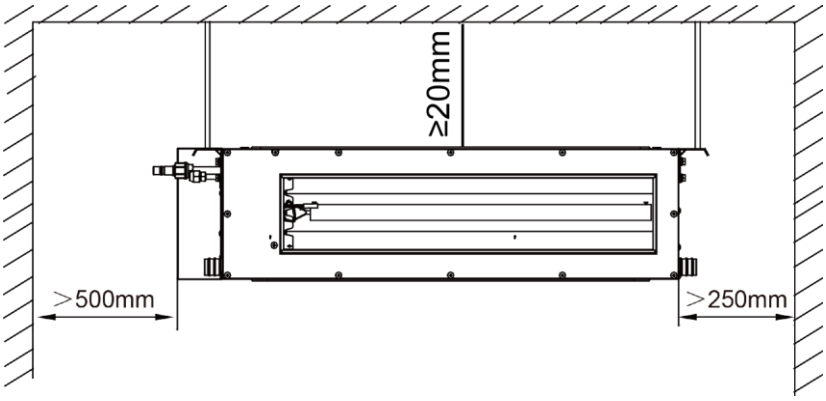

3.11.3 Installation notice

- The unit shall be installed by the professional personnel according to this installation instruction to ensure proper use.
- Please contact the local Gree appointed service center before installation. Any malfunction caused by the unit that is not installed by the Gree appointed service center would probably not be dealt with on time because of the inconvenience of the business contact.
- It should be guided under the professional personnel when the air conditioner unit is moved to other place.
- Installation of the unit must be in accordance with National Electric Codes and local regulations.
- Improper installation will affect unit's performance, so do not install the unit by yourself. Please contact local dealer to arrange professional technicians for the installation.
- Do not connect power until all installation work is finished.

3.11.4 Selection of air switch and power cord

Model	Power Cord Size	Air Switch capacity (A)	Minimum Sectional Area of Ground Wire (mm^2/AWG)	Minimum Sectional Area of Power Cord (mm^2/AWG)
GMV-ND22PL/B-T	220-240V~50Hz/ 208-230V~60Hz	6	1.0/AWG18	1.0/AWG18
GMV-ND25PL/B-T	220-240V~50Hz/ 208-230V~60Hz	6	1.0/AWG18	1.0/AWG18
GMV-ND28PL/B-T	220-240V~50Hz/ 208-230V~60Hz	6	1.0/AWG18	1.0/AWG18
GMV-ND32PL/B-T	220-240V~50Hz/ 208-230V~60Hz	6	1.0/AWG18	1.0/AWG18
GMV-ND36PL/B-T	220-240V~50Hz/ 208-230V~60Hz	6	1.0/AWG18	1.0/AWG18

Model	Power Cord Size	Air Switch capacity (A)	Minimum Sectional Area of Ground Wire (mm²/AWG)	Minimum Sectional Area of Power Cord (mm²/AWG)
GMV-ND40PL/B-T	220-240V~50Hz/ 208-230V~60Hz	6	1.0/AWG18	1.0/AWG18
GMV-ND45PL/B-T	220-240V~50Hz/ 208-230V~60Hz	6	1.0/AWG18	1.0/AWG18
GMV-ND50PL/B-T	220-240V~50Hz/ 208-230V~60Hz	6	1.0/AWG18	1.0/AWG18
GMV-ND56PL/B-T	220-240V~50Hz/ 208-230V~60Hz	6	1.0/AWG18	1.0/AWG18
GMV-ND63PL/B-T	220-240V~50Hz/ 208-230V~60Hz	6	1.0/AWG18	1.0/AWG18
GMV-ND72PL/B-T	220-240V~50Hz/ 208-230V~60Hz	6	1.0/AWG18	1.0/AWG18

3.12 Installation of Air Handler type Indoor Unit

3.12.1 Outline and installation dimension

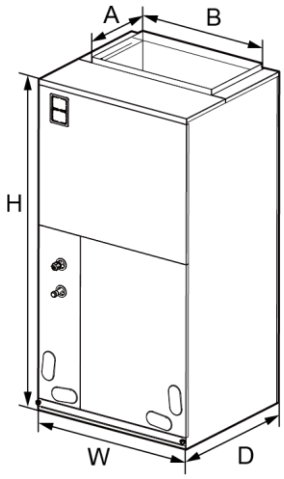

Below are dimensions of A, B, C, etc. for different models:

Unit: mm

Model	W	D	H	A	B
GMV-NR71A/A-D	460	540	1105	295	426
GMV-NR90A/A-D	460	540	1105	295	426
GMV-NR100A/A-D	540	540	1224	295	508
GMV-NR112A/A-D	540	540	1224	295	508
GMV-NR140A/A-D	630	540	1224	295	508

3.12.2 Installation notice

When installing the air handler, take consideration to minimize the length of refrigerant tubing as much as possible. Do not install the air handler in a location either above or below the condenser that violates the instructions provided with the condenser. Service clearance is to take precedence. Allow a minimum of 24” in front of the unit for service clearance. When installing in an area directly over a finished ceiling (such as an attic), an emergency drain pan is required directly under the unit. See local and state codes for requirements. When installing this unit in an area that may become wet, elevate the unit with a sturdy, non-porous material. In installations that may lead to physical damage (i.e. a garage) it is advised to install a protective barrier to prevent such damage.

This air handler is designed for a complete supply and return ductwork system. Do not operate this product without all ductwork attached.

Based upon the actual conditions, if air handler is installed as type (A), the air handler should be concealed in a specific room or space and make sure the air handler is not accessible to the general public.

Based upon the actual conditions, if air handler is installed as type (B), make sure that there is enough space for care and maintenance and the height between the air handler and ground is above 2500mm. And the air handler is not accessible to the general public.

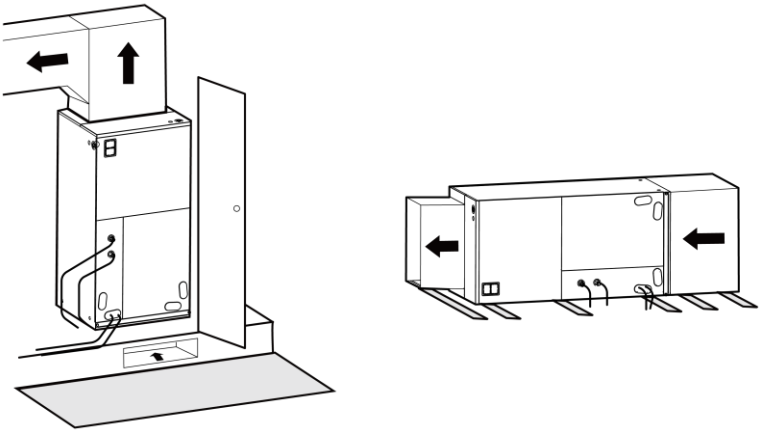

3.12.3 Selection of air switch and power cord

Model	Power Supply	Circuit Breaker Capacity (A)	Minimum Sectional Area of Ground Wire (mm²/AWG)	Minimum Sectional Area of Power Cord (mm²/AWG)
GMV-NR71A/A-D	208-230V~60Hz	6	1.0/AWG18	1.0/AWG18
GMV-NR90A/A-D	208-230V~60Hz	6	1.0/AWG18	1.0/AWG18
GMV-NR100A/A-D	208-230V~60Hz	6	1.0/AWG18	1.0/AWG18
GMV-NR112A/A-D	208-230V~60Hz	6	1.0/AWG18	1.0/AWG18
GMV-NR140A/A-D	208-230V~60Hz	6	1.0/AWG18	1.0/AWG18

3.13 Installation of Wall-Mounted Unit

3.13.1 Outline and installation dimension

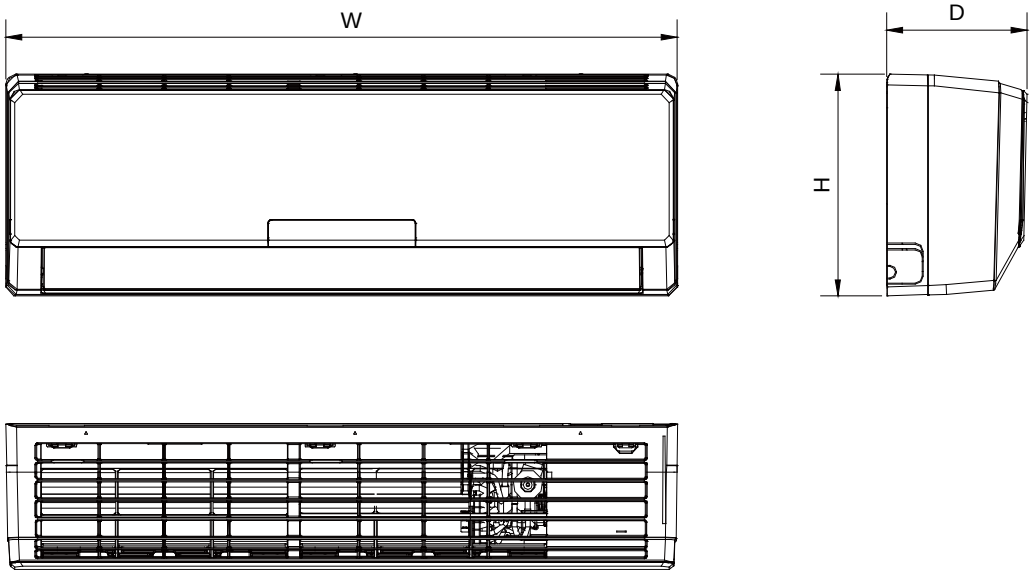

The table below lists the detailed dimensions.

Unit: mm

Model	W	H	D
GMV-N22G/A3A-K, GMV-N28G/A3A-K, GMV-N22G/A2A-K, GMV-N28G/A2A-K, GMV-N22G/A4A-K, GMV-N28G/A4A-K, GMV-N22G/A8A-K, GMV-N28G/A8A-K, GMV-N22G/C9A-K, GMV-N28G/C9A-K, GMV-N22G/E3A-K, GMV-N28G/E3A-K, GMV-N22G/B3A-K, GMV-N28G/B3A-K, GMV-N22G/A3A-D, GMV-N28G/A3A-D, GMV-N22G/A2A-D, GMV-N28G/A2A-D, GMV-N22G/A4A-D, GMV-N28G/A4A-D, GMV-N22G/A8A-D, GMV-N28G/A8A-D, GMV-N22G/C9A-D, GMV-N28G/C9A-D, GMV-N22G/E3A-D, GMV-N28G/E3A-D, GMV-N22G/B3A-D, GMV-N28G/B3A-D, GMV-ND22G/A3A-T, GMV-ND28G/A3A-T, GMV-ND22G/A8A-T, GMV-ND28G/A8A-T	843	275	180
GMV-N36G/A3A-K, GMV-N45G/A3A-K, GMV-N50G/A3A-K, GMV-N36G/A2A-K, GMV-N45G/A2A-K, GMV-N50G/A2A-K, GMV-N36G/A4A-K, GMV-N45G/A4A-K, GMV-N50G/A4A-K, GMV-N36G/A8A-K, GMV-N45G/A8A-K, GMV-N50G/A8A-K GMV-N36G/C9A-K, GMV-N45G/C9A-K, GMV-N50G/C9A-K, GMV-N36G/E3A-K, GMV-N45G/E3A-K, GMV-N50G/E3A-K, GMV-N36G/B3A-K, GMV-N45G/B3A-K, GMV-N50G/B3A-K, GMV-N36G/A3A-D, GMV-N45G/A3A-D, GMV-N50G/A3A-D GMV-N36G/A2A-D, GMV-N45G/A2A-D, GMV-N50G/A2A-D, GMV-N36G/A4A-D, GMV-N45G/A4A-D, GMV-N50G/A4A-D, GMV-N36G/A8A-D, GMV-N45G/A8A-D, GMV-N50G/A8A-D, GMV-N36G/C9A-D, GMV-N45G/C9A-D, GMV-N50G/C9A-D, GMV-N36G/E3A-D, GMV-N45G/E3A-D, GMV-N50G/E3A-D, GMV-N36G/B3A-D, GMV-N45G/B3A-D, GMV-N50G/B3A-D, GMV-ND36G/A3A-T, GMV-ND45G/A3A-T, GMV-ND50G/A3A-T, GMV-ND36G/A8A-T, GMV-ND45G/A8A-T, GMV-ND50G/A8A-T	940	298	200
GMV-N56G/A3A-K, GMV-N63G/A3A-K, GMV-N71G/A3A-K, GMV-N56G/A2A-K, GMV-N63G/A2A-K, GMV-N71G/A2A-K, GMV-N56G/A4A-K, GMV-N63G/A4A-K, GMV-N71G/A4A-K, GMV-N56G/A8A-K, GMV-N63G/A8A-K, GMV-N71G/A8A-K GMV-N56G/C9A-K, GMV-N63G/C9A-K, GMV-N71G/C9A-K, GMV-N56G/E3A-K, GMV-N63G/E3A-K, GMV-N71G/E3A-K, GMV-N56G/B3A-K, GMV-N63G/B3A-K, GMV-N71G/B3A-K, GMV-N56G/A3A-D, GMV-N63G/A3A-D, GMV-N71G/A3A-D GMV-N56G/A2A-D, GMV-N63G/A2A-D, GMV-N71G/A2A-D, GMV-N56G/A4A-D, GMV-N63G/A4A-D, GMV-N71G/A4A-D, GMV-N56G/A8A-D, GMV-N63G/A8A-D, GMV-N71G/A8A-D, GMV-N56G/C9A-D, GMV-N63G/C9A-D, GMV-N71G/C9A-D GMV-N56G/E3A-D, GMV-N63G/E3A-D, GMV-N71G/E3A-D, GMV-N56G/B3A-D, GMV-N63G/B3A-D, GMV-N71G/B3A-D, GMV-ND56G/A3A-T, GMV-ND63G/A3A-T, GMV-ND71G/A3A-T, GMV-ND56G/A8A-T, GMV-ND63G/A8A-T, GMV-ND71G/A8A-T	1008	221	319
GMV-ND80G/A3A-T, GMV-ND90G/A3A-T, GMV-ND100G/A3A-T GMV-ND80G/A8A-T, GMV-ND90G/A8A-T, GMV-ND100G/A8A-T	1350	326	258

Model	W	H	D
GMV-ND15G/B6B-T, GMV-ND18G/B6B-T GMV-ND22G/B6B-T, GMV-ND28G/B6B-T, GMV-ND36G/B6B-T GMV-ND15G/B4B-T, GMV-ND18G/B4B-T GMV-ND22G/B4B-T, GMV-ND28G/B4B-T, GMV-ND36G/B4B-T GMV-ND22G/C4B-T, GMV-ND28G/C4B-T, GMV-ND36G/C4B-T GMV-ND22G/C2B-T, GMV-ND28G/C2B-T, GMV-ND36G/C2B-T GMV-ND22G/D2B-T, GMV-ND28G/D2B-T, GMV-ND36G/D2B-T	845	289	209
GMV-ND45G/B6B-T, GMV-ND50G/B6B-T GMV-ND45G/B4B-T, GMV-ND50G/B4B-T GMV-ND45G/C4B-T, GMV-ND50G/C4B-T GMV-ND45G/C2B-T, GMV-ND50G/C2B-T GMV-ND45G/D2B-T, GMV-ND50G/D2B-T	970	300	224
GMV-ND56G/B6B-T, GMV-ND63G/B6B-T, GMV-ND71G/B6B-T GMV-ND56G/B4B-T, GMV-ND63G/B4B-T, GMV-ND71G/B4B-T GMV-ND56G/C2B-T, GMV-ND63G/C2B-T, GMV-ND71G/C2B-T GMV-ND56G/C4B-T, GMV-ND63G/C4B-T, GMV-ND71G/C4B-T GMV-ND56G/D2B-T, GMV-ND63G/D2B-T, GMV-ND71G/D2B-T	1078	325	246
GMV-ND80G/B4B-T, GMV-ND90G/B4B-T, GMV-ND100G/B4B-T	1350	326	258

3.13.2 Installation space

Unit: mm

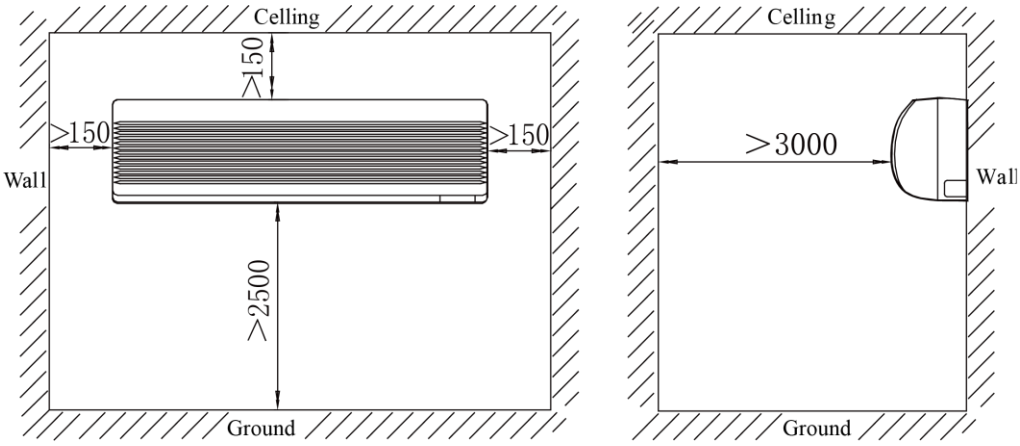

3.13.3 Installation notice

Connect the ends of the connection pipe with two leading pipes, and then tighten the joint nuts tightly.

Connect the connect pipe with the two relative leading pipe, tie the nut on tie –in of the connect pipe tightly.

Notes:

① Be careful in bending the connection pipes, or you would damage the pipes.

② If the tightening torque for the flare nut is too great, leakage would happen.

3.13.4 Selection of air switch and power cord

Model	Power Cord Size	Air Switch Capacity (A)	Minimum Sectional Area of Ground Wire (mm²/AWG)	Minimum Sectional Area of Power Cord (mm²/AWG)
GMV-N22G/A3A-K GMV-N22G/A2A-K GMV-N22G/A4A-K GMV-N22G/A8A-K GMV-N22G/C9A-K GMV-N22G/E3A-K GMV-N22G/B3A-K	220-240V ~ 50Hz	6	1.0/AWG18	1.0/AWG18
GMV-N28G/A3A-K GMV-N28G/A2A-K GMV-N28G/A4A-K GMV-N28G/A8A-K GMV-N28G/C9A-K GMV-N28G/E3A-K GMV-N28G/B3A-K	220-240V ~ 50Hz	6	1.0/AWG18	1.0/AWG18
GMV-N36G/A3A-K GMV-N36G/A2A-K GMV-N36G/A4A-K GMV-N36G/A8A-K GMV-N36G/C9A-K GMV-N36G/E3A-K GMV-N36G/B3A-K	220-240V ~ 50Hz	6	1.0/AWG18	1.0/AWG18

Model	Power Cord Size	Air Switch Capacity (A)	Minimum Sectional Area of Ground Wire (mm²/AWG)	Minimum Sectional Area of Power Cord (mm²/AWG)
GMV-N45G/A3A-K GMV-N45G/A2A-K GMV-N45G/A4A-K GMV-N45G/A8A-K GMV-N45G/C9A-K GMV-N45G/E3A-K GMV-N45G/B3A-K	220-240V ~ 50Hz	6	1.0/AWG18	1.0/AWG18
GMV-N50G/A3A-K GMV-N50G/A2A-K GMV-N50G/A4A-K GMV-N50G/A8A-K GMV-N50G/C9A-K GMV-N50G/E3A-K GMV-N50G/B3A-K	220-240V ~ 50Hz	6	1.0/AWG18	1.0/AWG18
GMV-N56G/A3A-K GMV-N56G/A2A-K GMV-N56G/A4A-K GMV-N56G/A8A-K GMV-N56G/C9A-K GMV-N56G/E3A-K GMV-N56G/B3A-K	220-240V ~ 50Hz	6	1.0/AWG18	1.0/AWG18
GMV-N63G/A3A-K GMV-N63G/A2A-K GMV-N63G/A4A-K GMV-N63G/A8A-K GMV-N63G/C9A-K GMV-N63G/E3A-K GMV-N63G/B3A-K	220-240V ~ 50Hz	6	1.0/AWG18	1.0/AWG18
GMV-N71G/A3A-K GMV-N71G/A2A-K GMV-N71G/A4A-K GMV-N71G/A8A-K GMV-N71G/C9A-K GMV-N71G/E3A-K GMV-N71G/B3A-K	220-240V ~ 50Hz	6	1.0/AWG18	1.0/AWG18
GMV-N22G/A3A-D GMV-N22G/A2A-D GMV-N22G/A4A-D GMV-N22G/A8A-D GMV-N22G/C9A-D GMV-N22G/E3A-D GMV-N22G/B3A-D	208~230V ~ 60Hz	6	1.0/AWG18	1.0/AWG18
GMV-N28G/A3A-D GMV-N28G/A2A-D GMV-N28G/A4A-D GMV-N28G/A8A-D GMV-N28G/C9A-D GMV-N28G/E3A-D GMV-N28G/B3A-D	208~230V ~ 60Hz	6	1.0/AWG18	1.0/AWG18
GMV-N36G/A3A-D GMV-N36G/A2A-D GMV-N36G/A4A-D GMV-N36G/A8A-D GMV-N36G/C9A-D GMV-N36G/E3A-D GMV-N36G/B3A-D	208~230V ~ 60Hz	6	1.0/AWG18	1.0/AWG18

Model	Power Cord Size	Air Switch Capacity (A)	Minimum Sectional Area of Ground Wire (mm²/AWG)	Minimum Sectional Area of Power Cord (mm²/AWG)
GMV-N45G/A3A-D GMV-N45G/A2A-D GMV-N45G/A4A-D GMV-N45G/A8A-D GMV-N45G/C9A-D GMV-N45G/E3A-D GMV-N45G/B3A-D	208~230V ~ 60Hz	6	1.0/AWG18	1.0/AWG18
GMV-N50G/A3A-D GMV-N50G/A2A-D GMV-N50G/A4A-D GMV-N50G/A8A-D GMV-N50G/C9A-D GMV-N50G/E3A-D GMV-N50G/B3A-D	208~230V ~ 60Hz	6	1.0/AWG18	1.0/AWG18
GMV-N56G/A3A-D GMV-N56G/A2A-D GMV-N56G/A4A-D GMV-N56G/A8A-D GMV-N56G/C9A-D GMV-N56G/E3A-D GMV-N56G/B3A-D	208~230V ~ 60Hz	6	1.0/AWG18	1.0/AWG18
GMV-N63G/A3A-D GMV-N63G/A2A-D GMV-N63G/A4A-D GMV-N63G/A8A-D GMV-N63G/C9A-D GMV-N63G/E3A-D GMV-N63G/B3A-D	208~230V ~ 60Hz	6	1.0/AWG18	1.0/AWG18
GMV-N71G/A3A-D GMV-N71G/A2A-D GMV-N71G/A4A-D GMV-N71G/A8A-D GMV-N71G/C9A-D GMV-N71G/E3A-D GMV-N71G/B3A-D	208~230V ~ 60Hz	6	1.0/AWG18	1.0/AWG18

Model	Power Cord Size	Air Switch Capacity (A)	Minimum Sectional Area of Ground Wire (mm²/AWG)	Minimum Sectional Area of Power Cord (mm²/AWG)
GMV-ND15G/B6B-T GMV-ND15G/B4B-T	220-240V~50Hz /208-230V~60Hz	6	1.0/AWG18	1.0/AWG18
GMV-ND18G/B6B-T GMV-ND18G/B4B-T	220-240V~50Hz /208-230V~60Hz	6	1.0/AWG18	1.0/AWG18
GMV-ND22G/A3A-T GMV-ND22G/A8A-T GMV-ND22G/B6B-T GMV-ND22G/B4B-T GMV-ND22G/C4B-T GMV-ND22G/C2B-T GMV-ND22G/D2B-T	220-240V~50Hz /208-230V~60Hz	6	1.0/AWG18	1.0/AWG18
GMV-ND28G/A3A-T GMV-ND28G/A8A-T GMV-ND28G/B6B-T GMV-ND28G/B4B-T GMV-ND28G/C4B-T GMV-ND28G/C2B-T GMV-ND28G/D2B-T	220-240V~50Hz /208-230V~60Hz	6	1.0/AWG18	1.0/AWG18

Model	Power Cord Size	Air Switch Capacity (A)	Minimum Sectional Area of Ground Wire (mm²/AWG)	Minimum Sectional Area of Power Cord (mm²/AWG)
GMV-ND36G/A3A-T GMV-ND36G/A8A-T GMV-ND36G/B6B-T GMV-ND36G/B4B-T GMV-ND36G/C4B-T GMV-ND36G/C2B-T GMV-ND36G/D2B-T	220-240V~50Hz /208-230V~60Hz	6	1.0/AWG18	1.0/AWG18
GMV-ND45G/A3A-T GMV-ND45G/A8A-T GMV-ND45G/B6B-T GMV-ND45G/B4B-T GMV-ND45G/C4B-T GMV-ND45G/C2B-T GMV-ND45G/D2B-T	220-240V~50Hz /208-230V~60Hz	6	1.0/AWG18	1.0/AWG18
GMV-ND50G/A3A-T GMV-ND50G/A8A-T GMV-ND50G/B6B-T GMV-ND50G/B4B-T GMV-ND50G/C4B-T GMV-ND50G/C2B-T GMV-ND50G/D2B-T	220-240V~50Hz /208-230V~60Hz	6	1.0/AWG18	1.0/AWG18
GMV-ND56G/A3A-T GMV-ND56G/A8A-T GMV-ND56G/B6B-T GMV-ND56G/B4B-T GMV-ND56G/C4B-T GMV-ND56G/C2B-T GMV-ND56G/D2B-T	220-240V~50Hz /208-230V~60Hz	6	1.0/AWG18	1.0/AWG18
GMV-ND63G/A3A-T GMV-ND63G/A8A-T GMV-ND63G/B6B-T GMV-ND63G/B4B-T GMV-ND63G/C4B-T GMV-ND63G/C2B-T GMV-ND63G/D2B-T	220-240V~50Hz /208-230V~60Hz	6	1.0/AWG18	1.0/AWG18
GMV-ND71G/A3A-T GMV-ND71G/A8A-T GMV-ND71G/B6B-T GMV-ND71G/B4B-T GMV-ND71G/C4B-T GMV-ND71G/C2B-T GMV-ND71G/D2B-T	220-240V~50Hz /208-230V~60Hz	6	1.0/AWG18	1.0/AWG18
GMV-ND80G/A3A-T GMV-ND80G/A8A-T GMV-ND80G/B4B-T	220-240V~50Hz /208-230V~60Hz	6	1.0/AWG18	1.0/AWG18
GMV-ND90G/A3A-T GMV-ND90G/A8A-T GMV-ND90G/B4B-T	220-240V~50Hz /208-230V~60Hz	6	1.0/AWG18	1.0/AWG18
GMV-ND100G/A3A-T GMV-ND100G/A8A-T GMV-ND100G/B4B-T	220-240V~50Hz /208-230V~60Hz	6	1.0/AWG18	1.0/AWG18

3.14 Console Type Indoor Unit

3.14.1 Outline and installation dimension

The table below lists the detailed dimensions.

Unit: mm

Model	W	H	D
GMV-ND22C/A-T GMV-ND28C/A-T GMV-ND36C/A-T GMV-ND45C/A-T GMV-ND50C/A-T	700	600	215

3.14.2 Installation space

Unit:mm

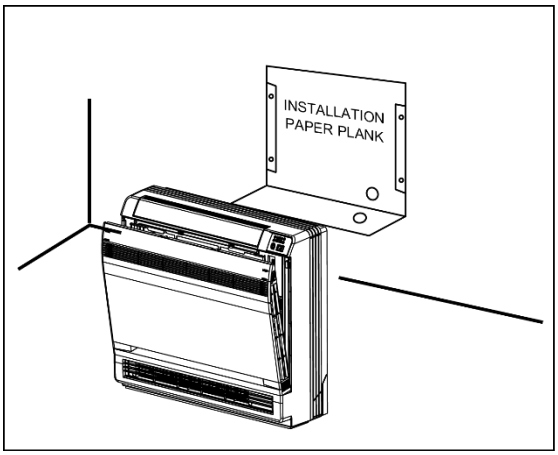

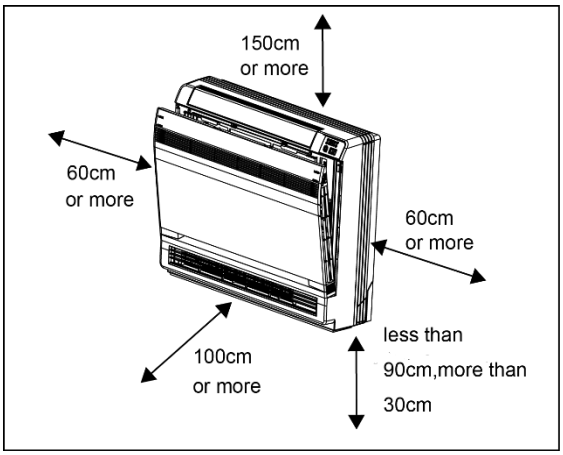

3.14.3 Installation notice

Connect the ends of the connection pipe with two leading pipes, and then tighten the joint nuts tightly.

Connect the connect pipe with the two relative leading pipe, tie the nut on tie –in of the connect pipe tightly.

Notes:

① Be careful in bending the connection pipes, or you would damage the pipes.

② If the tightening torque for the flare nut is too great, leakage would happen.

3.14.4 Selection of air switch and power cord

Model	Power Cord Size	Air Switch Capacity (A)	Minimum Sectional Area of Ground Wire (mm²/AWG)	Minimum Sectional Area of Power Cord (mm²/AWG)
GMV-ND22C/A-T, GMV-ND28C/A-T GMV-ND36C/A-T, GMV-ND45C/A-T GMV-ND50C/A-T	220-240V ~ 50Hz	6	1.0/AWG18	1.0/AWG18

3.15 Installation of Super High Static Pressure Duct Type Indoor Unit

3.15.1 Outline and installation dimension

Model: GMV-ND22PHS/B-T~ GMV-ND180PHS/B-T

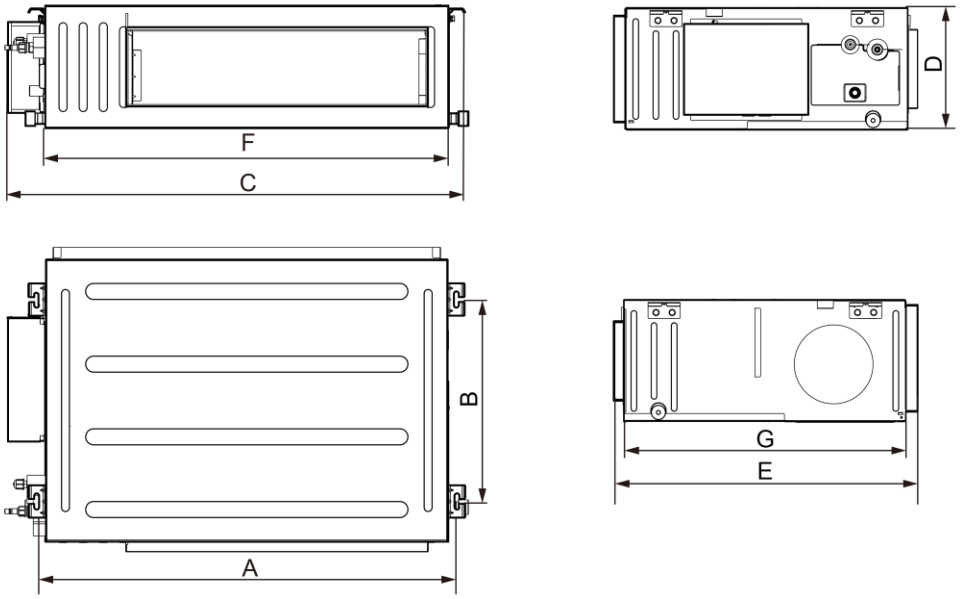

Model：GMV-ND400PH/AR-X

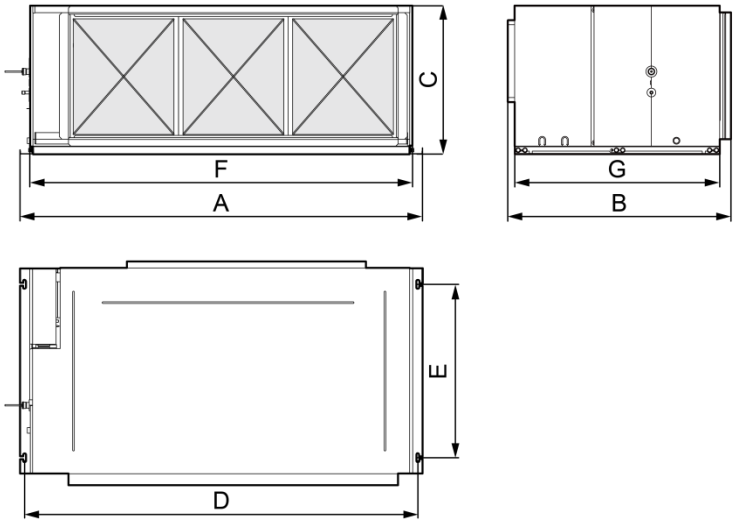

Model： GMV-ND450PH/AR-X

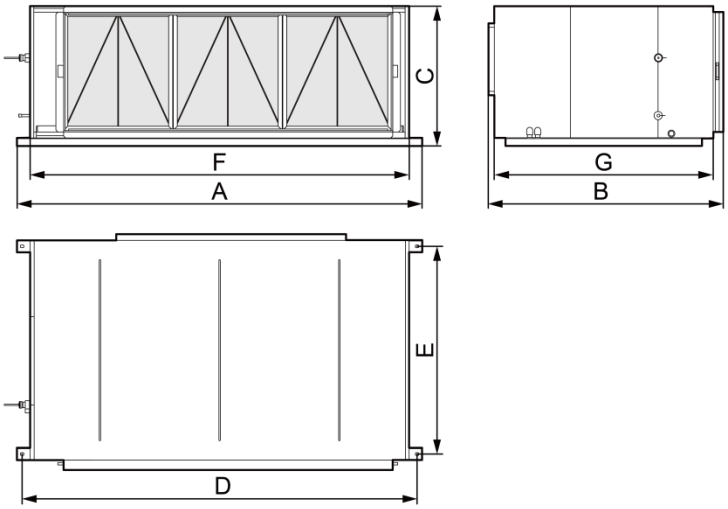

Model：GMV-N560PH/AR-M

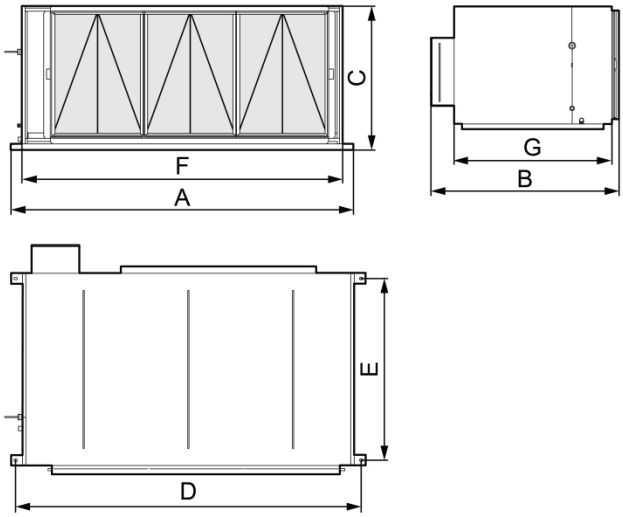

Below are dimensions of A, B, C, etc. for different models:

Unit: mm

Model	A	B	C	D	E	F	G
GMV-ND22PHS/B-T GMV-ND25PHS/B-T GMV-ND28PHS/B-T GMV-ND32PHS/B-T GMV-ND36PHS/B-T GMV-ND40PHS/B-T GMV-ND45PHS/B-T GMV-ND50PHS/B-T	740	500	830	300	754	700	700
GMV-ND56PHS/B-T GMV-ND63PHS/B-T GMV-ND71PHS/B-T GMV-ND80PHS/B-T	1040	500	1130	300	754	1000	700
GMV-ND90PHS/B-T GMV-ND100PHS/B-T GMV-ND112PHS/B-T GMV-ND125PHS/B-T GMV-ND140PHS/B-T GMV-ND160PHS/B-T	1440	500	1530	300	754	1400	700

Model	A	B	C	D	E	F	G
GMV-ND180PHS/B-T	1440	500	1580	300	754	1400	700
GMV-ND400PH/AR-X	1770	982	650	1730	760	1680	900
GMV-ND450PH/AR-X	2030	1179	700	1980	1040	1900	1100
GMV-N560PH/AR-M	2030	1309	850	1980	1040	1900	1100

3.15.2 Installation space

Model: GMV-ND22PHS/B-T~ GMV-ND180PHS/B-T

Unit: mm

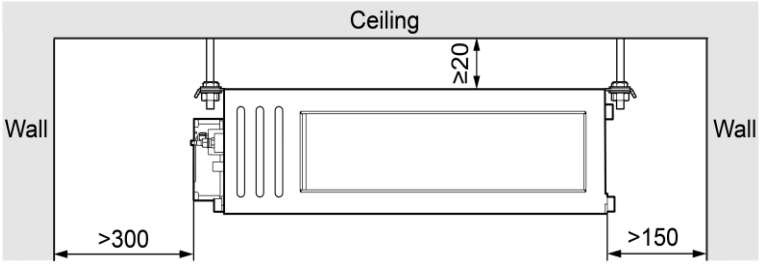

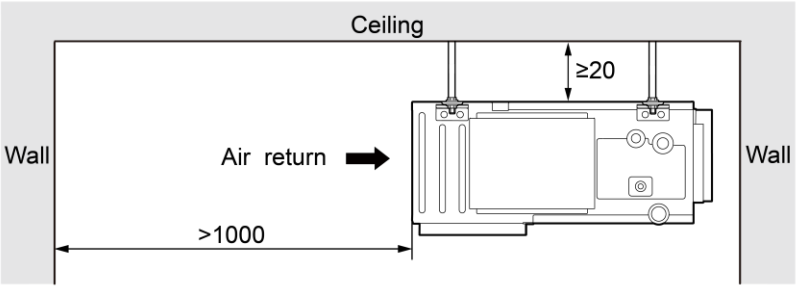

Model:GMV-ND400PH/AR-X

Unit: mm

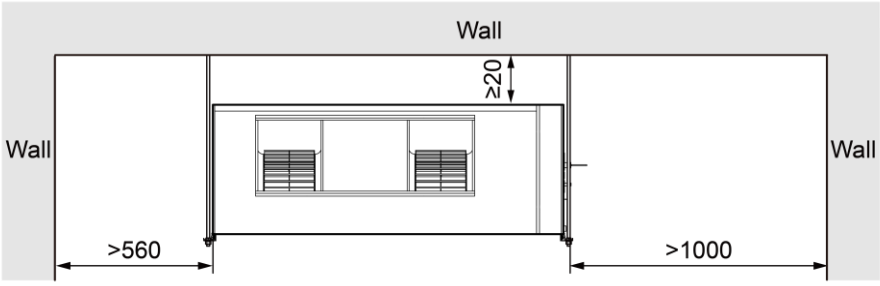

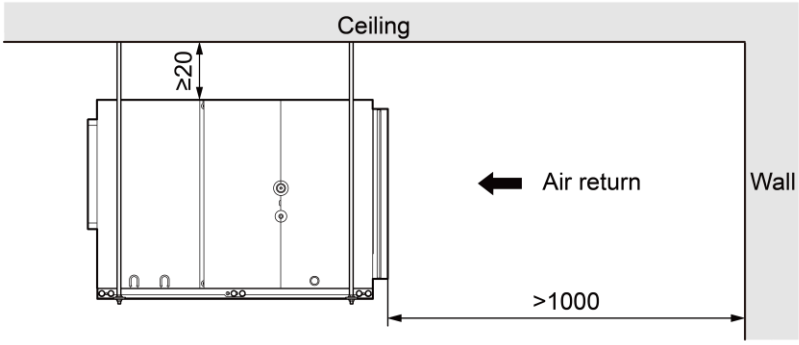

Model:GMV-ND450PH/AR-X

Unit: mm

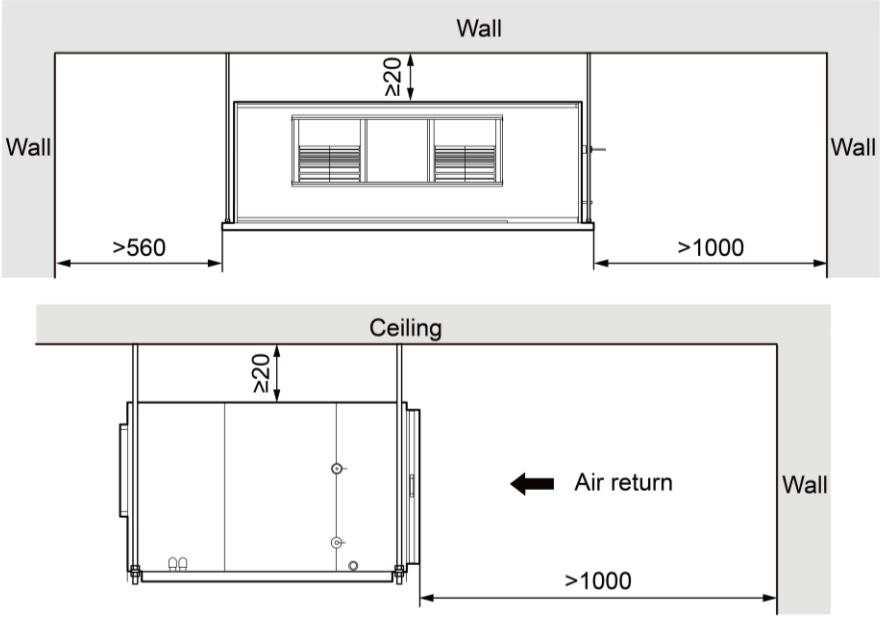

Model:GMV-N560PH/AR-M

Unit: mm

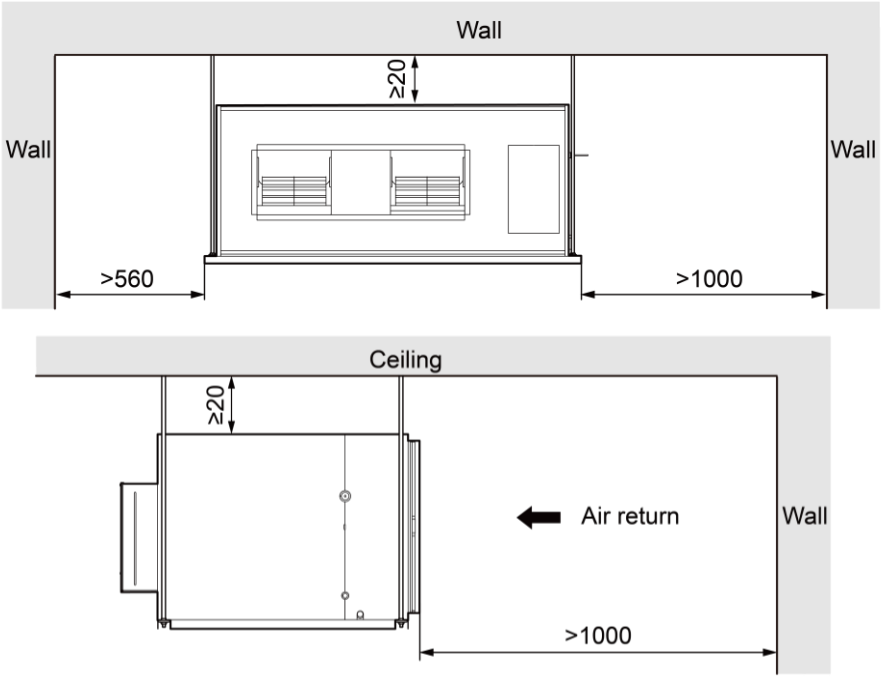

3.15.3 Installation notice

- The unit shall be installed by the professional personnel according to this installation instruction to ensure proper use.
- Please contact the local Gree appointed service center before installation. Any malfunction caused by the unit that is not installed by the Gree appointed service center would probably not be dealt with on time because of the inconvenience of the business contact.
- It should be guided under the professional personnel when the air conditioner unit is moved to other place.

- Installation of the unit must be in accordance with National Electric Codes and local regulations.
- Improper installation will affect unit's performance, so do not install the unit by yourself. Please contact local dealer to arrange professional technicians for the installation.
- Do not connect power until all installation work is finished.
- If the supply cord is damaged, it must be replaced by the manufacturer or its service agent or a similarly qualified person in order to avoid a hazard.

3.15.4 Selection of air switch and power cord

Model	Power Cord Size	Air Switch Capacity (A)	Minimum Sectional Area of Ground Wire (mm²/AWG)	Minimum Sectional Area of Power Cord (mm²/AWG)
GMV-ND22PHS/B-T	220-240V/50Hz 208-230V/60Hz	6	1.0/AWG18	1.0/AWG18
GMV-ND25PHS/B-T	220-240V/50Hz 208-230V/60Hz	6	1.0/AWG18	1.0/AWG18
GMV-ND28PHS/B-T	220-240V/50Hz 208-230V/60Hz	6	1.0/AWG18	1.0/AWG18
GMV-ND32PHS/B-T	220-240V/50Hz 208-230V/60Hz	6	1.0/AWG18	1.0/AWG18
GMV-ND36PHS/B-T	220-240V/50Hz 208-230V/60Hz	6	1.0/AWG18	1.0/AWG18
GMV-ND40PHS/B-T	220-240V/50Hz 208-230V/60Hz	6	1.0/AWG18	1.0/AWG18
GMV-ND45PHS/B-T	220-240V/50Hz 208-230V/60Hz	6	1.0/AWG18	1.0/AWG18
GMV-ND50PHS/B-T	220-240V/50Hz 208-230V/60Hz	6	1.0/AWG18	1.0/AWG18
GMV-ND56PHS/B-T	220-240V/50Hz 208-230V/60Hz	6	1.0/AWG18	1.0/AWG18
GMV-ND63PHS/B-T	220-240V/50Hz 208-230V/60Hz	6	1.0/AWG18	1.0/AWG18
GMV-ND71PHS/B-T	220-240V/50Hz 208-230V/60Hz	6	1.0/AWG18	1.0/AWG18
GMV-ND80PHS/B-T	220-240V/50Hz 208-230V/60Hz	6	1.0/AWG18	1.0/AWG18
GMV-ND90PHS/B-T	220-240V/50Hz 208-230V/60Hz	6	1.0/AWG18	1.0/AWG18
GMV-ND100PHS/B-T	220-240V/50Hz 208-230V/60Hz	6	1.0/AWG18	1.0/AWG18
GMV-ND112PHS/B-T	220-240V/50Hz 208-230V/60Hz	6	1.0/AWG18	1.0/AWG18
GMV-ND125PHS/B-T	220-240V/50Hz 208-230V/60Hz	6	1.0/AWG18	1.0/AWG18
GMV-ND140PHS/B-T	220-240V/50Hz 208-230V/60Hz	6	1.0/AWG18	1.0/AWG18
GMV-ND160PHS/B-T	220-240V/50Hz 208-230V/60Hz	6	1.0/AWG18	1.0/AWG18
GMV-ND180PHS/B-T	220-240V/50Hz 208-230V/60Hz	6	1.0/AWG18	1.0/AWG18
GMV-ND400PH/AR-X	380-415V 3N~50/60Hz	10	1.0/AWG18	1.0/AWG18
GMV-ND450PH/AR-X	380-415V 3N~50/60Hz	10	1.0/AWG18	1.0/AWG18
GMV-N560PH/AR-M	380V 3N~50Hz	10	1.0/AWG18	1.0/AWG18

3.16 Installation of AHU-KIT Type

3.16.1 Outline and installation dimension

Unit: mm

(1) Size of control box for GMV-N36U/A-T, GMV-N71U/A-T, GMV-N140U/A-T, GMV-N280U/A-T, GMV-N560U/A-T, GMV-N36U/B-T, GMV-N71U/B-T, GMV-N140U/B-T, GMV-N280U/B-T and GMV-N560U/B-T:

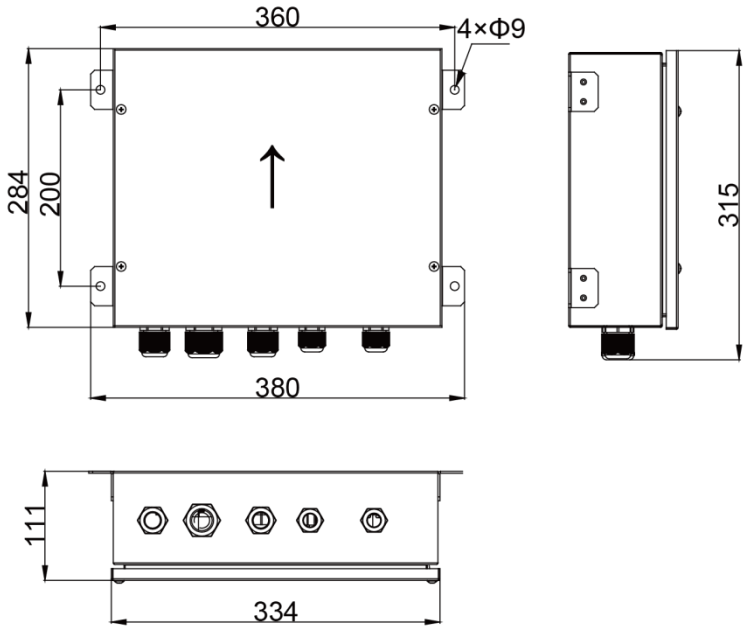

(2) Size of control box for GMV-N36U/C-T, GMV-N71U/C-T, GMV-N140U/C-T, GMV-N280U/C-T and GMV-N560U/C-T:

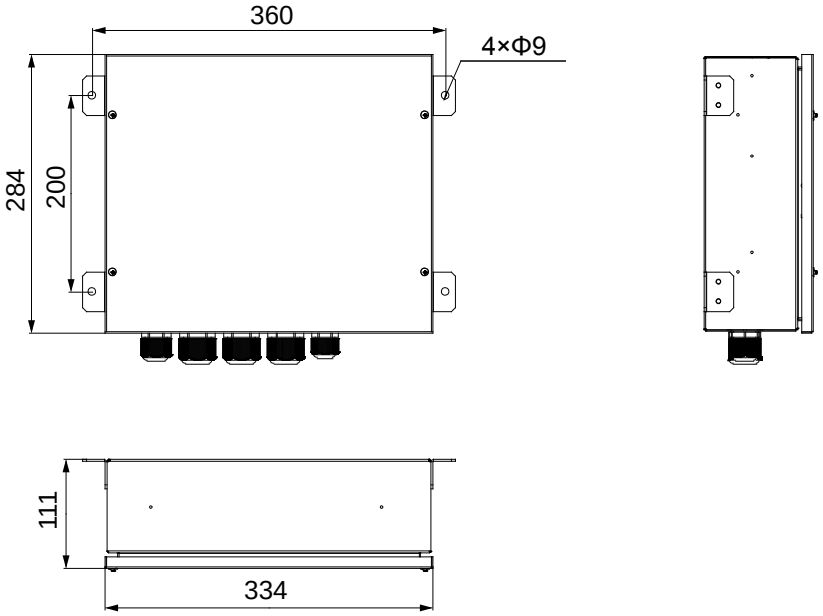

(3) Size of EXV box for GMV-N36U/A-T, GMV-N71U/A-T, GMV-N140U/A-T and GMV-N280U/A-T:

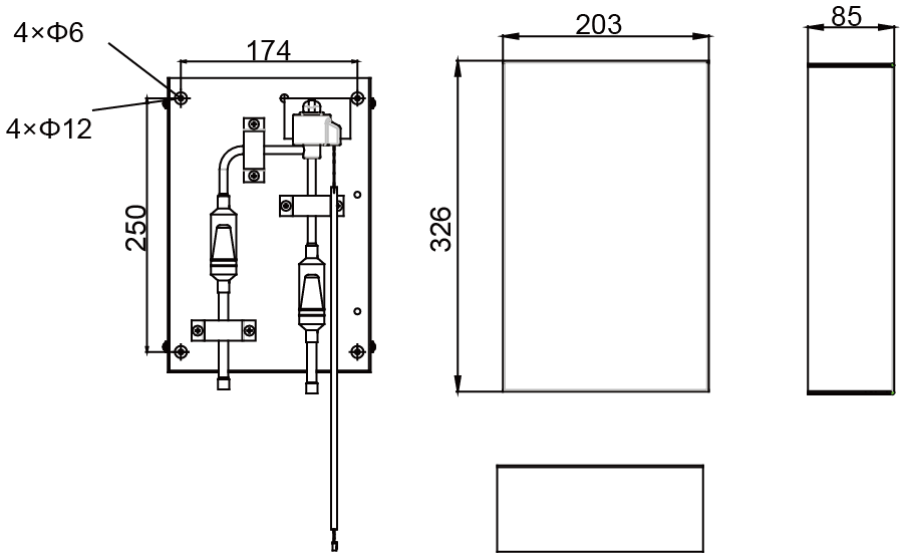

(4) Size of EXV box for GMV-N560U/A-T:

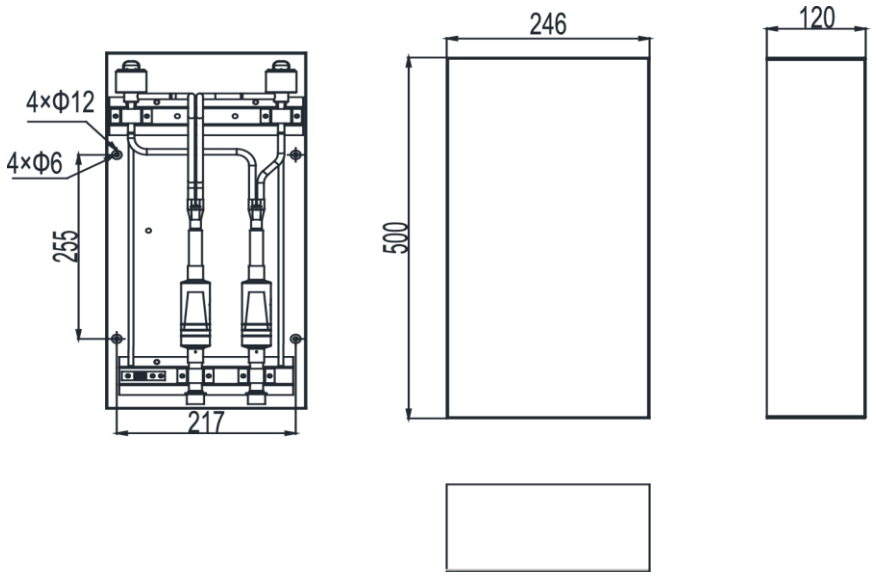

(5) Size of EXV box for GMV-N36U/B-T and GMV-N36U/C-T:

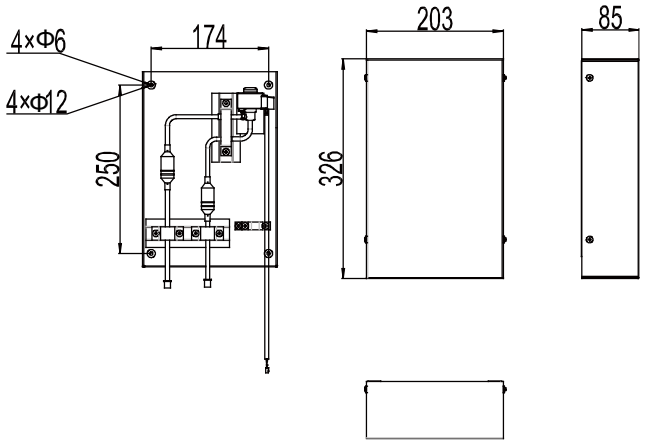

(6) Size of EXV box for GMV-N71U/B-T, GMV-N140U/B-T, GMV-N280U/B-T, GMV-N71U/C-T,GMV-N140U/C-T and GMV-N280U/C-T:

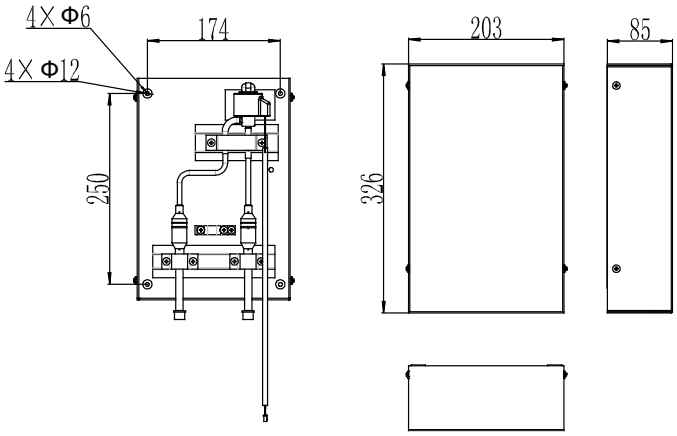

(7) Size of EXV box for GMV-N560U/B-T and GMV-N560U/C-T:

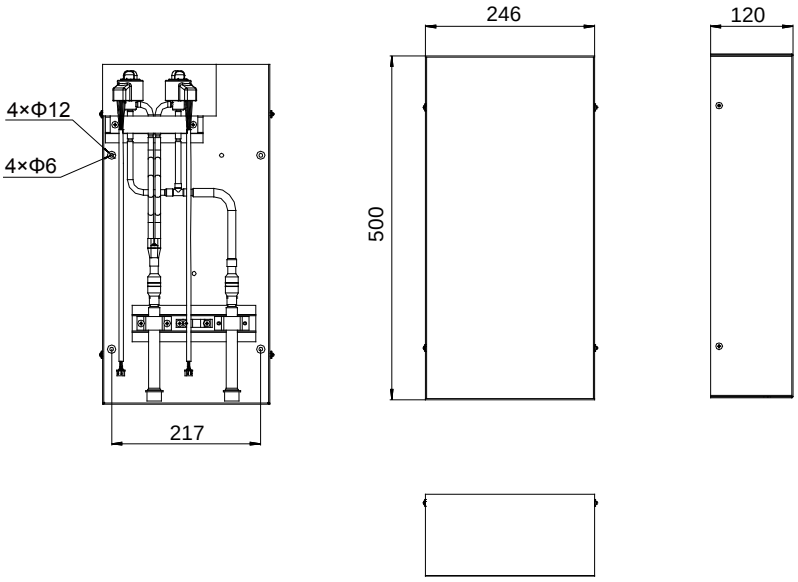

3.16.2 Installation space

Unit: mm

(1) Maintenance space of control space :

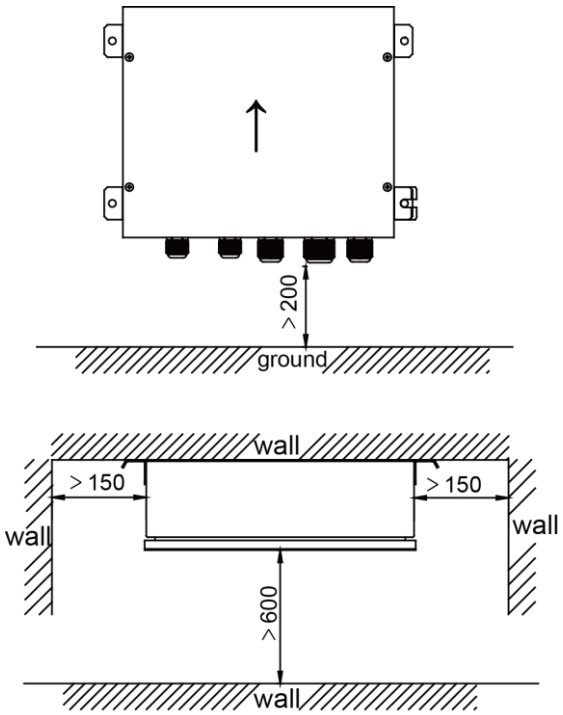

The control box must be installed upwards as the direction of the arrow shown in the figure

(2) Maintenance space of EXV box:

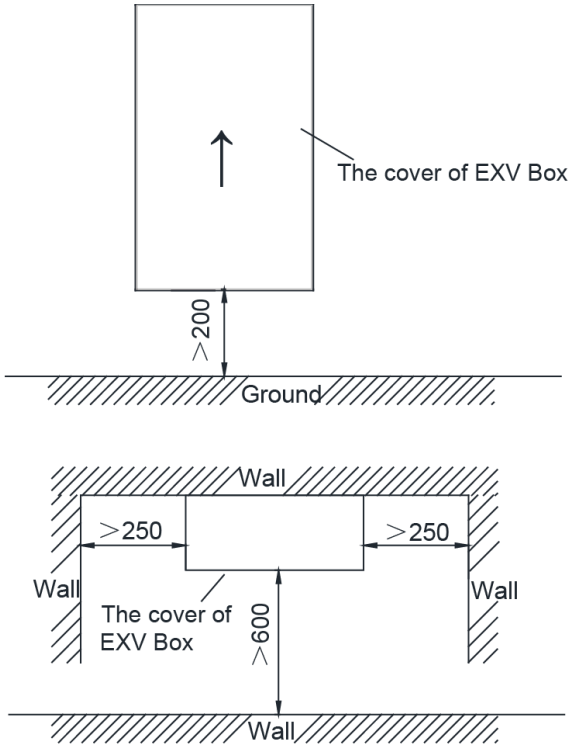

The EXV box must be installed upwards as the direction of the arrow shown in the figure

3.16.3 Installation notice

- The EXV box can be installed inside and outside. The control box should be installed inside.
- Do not install the EXV box in or on the outdoor unit.
- Do not put the option boxes in direct sunlight. Direct sunlight will increase the temperature inside the option boxes and may reduce its lifetime and influence its operation.
- Choose a flat and strong mounting surface.
- Make sure there is enough free space in front and in the side of the AHU-KIT unit for future maintenance.
- The installation site should be far away from heat source, inflammable gas and smoke.
- Keep the air handling unit, power supply wiring and transmission wiring at least 1 m away from televisions and radios. This is to prevent image interference and noise in those electrical appliances (Noise may be generated depending on the conditions under which the electric wave is generated, even if 1 m is kept).
- Make sure the electronic expansion valve is installed in an upright position.

3.16.4 EXV Installation

3.16.4.1 Mechanical Installation

(1) Remove the EXV box cover by unscrewing screws.

(2) Drill 4 holes on correct position (measurements as indicated in figure below) and fix the valve kit box securely with 4 screws through the provided holes Ø12 mm.

Notes:

① Make sure that the EXV box is installed upwards.

② Make sure there is enough free space in front and in the side of the box for future maintenance.

3.16.4.2 Brazing Work

Unit: mm

(1) Prepare the inlet/outlet field piping just in front of the connection (do not braze yet).

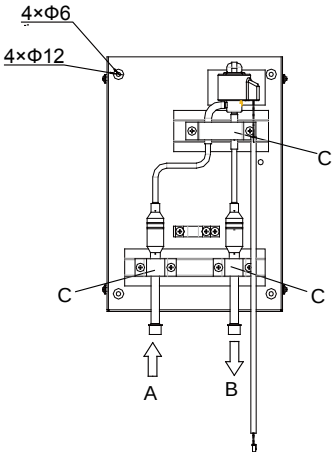

A: Inlet coming from the outdoor unit

B: Outlet to air handling unit

C: Wire clamp

(2) Remove the wire clamp (C) by unscrewing 6xM4.2.

(3) Braze the field piping.

Notes:

① Make sure there is nitrogen protection during welding.

Brazing without carrying out nitrogen replacement or releasing nitrogen into the piping will create large quantities of oxidized film on the inside of the pipes, adversely affecting valves and compressors in the refrigerating system and preventing normal operation.

② When brazing while inserting nitrogen into the piping, nitrogen must be set to 0.02 MPa with a pressure-reducing valve (=just enough so that it can be felt on the skin).

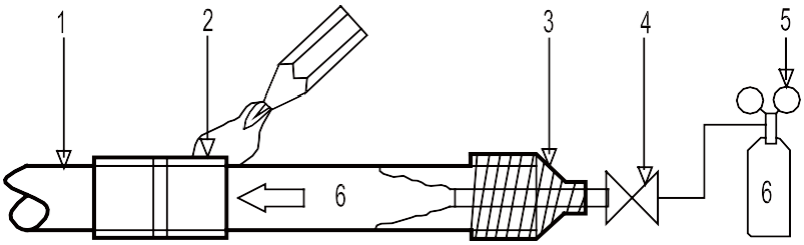

1: Refrigerant piping

2: Part to be brazed

3: Taping

4: Hands valve

5: Pressure-reducing valve

6: Nitrogen

For details, see manual of the outdoor unit.

③ Make sure to cool the filters and valve body with a wet cloth and make sure the body temperature does not exceed 120°C during brazing.

④ Make sure that the other parts such as electrical box, tie wraps and wires are protected from direct brazing flames during brazing.

⑤ The EXV box is required to be installed in a vertical direction within the range of 90±15° (not allowed for horizontal work).Welding the connection tubes first before refrigerant pipes in order to avoid face-down soldering.

⑥ All field piping must be provided by a licensed refrigeration technician and must comply with the relevant local and national codes.

a) For refrigerant piping of outdoor unit, refer to the installation manual supplied with the outdoor unit.

b) The maximum allowed piping length depends on the connected outdoor model.

⑦ Secure the wire clamp (C) in place again (6xM4.2).

⑧ Make sure that field pipes are fully insulated. Make sure that there is no gap between both ends in order to avoid condensation dripping (finish the connection with tape eventually).

3.16.5 Piping Installation

When one AHU-KIT is connected to one AHU, the piping installation diagram is as follows:

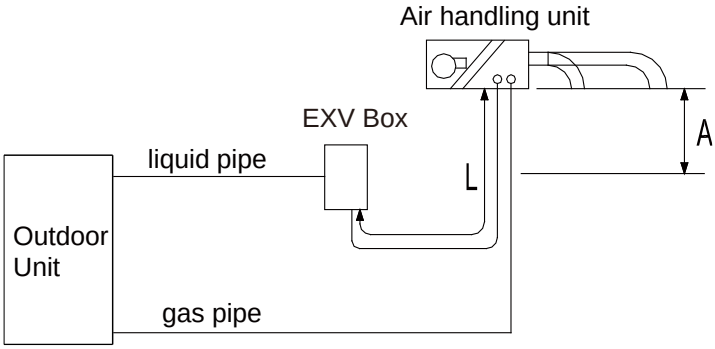

When several AHU-KITs are connected to one AHU, the piping installation diagram is as follows:

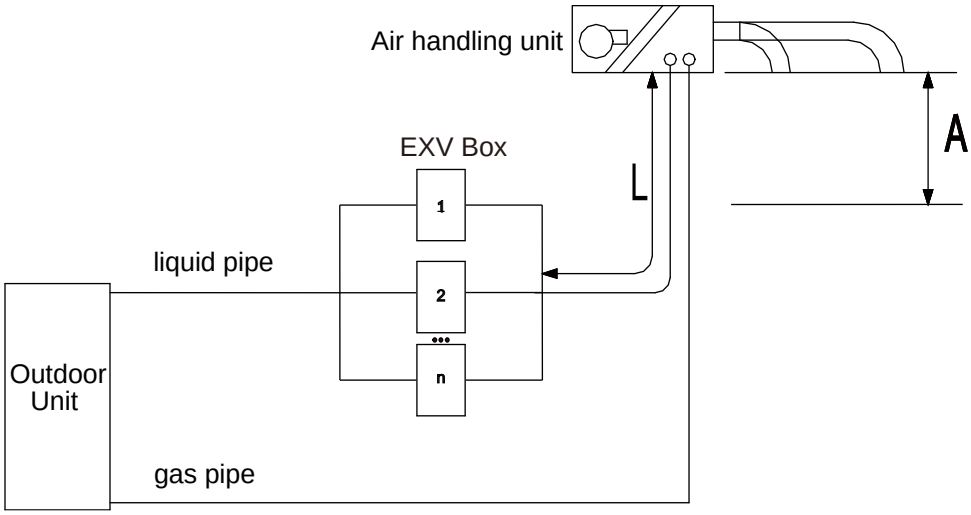

Notes:

A: When the air handling unit is installed at the top of the EXV box, vertical distance between the bottom of the air handling unit to the EXV box is no more than 2 m; if the air handling unit is installed under the EXV box, vertical distance between the bottom of the air handling unit to the EXV box is no more than 2 m.

L: The length of liquid pipe between the air handling unit to EXV box is no more than 2 m.

L is to be considered as a part of the total maximum piping length. See installation manual of the outdoor unit for piping installation.

3.16.6 Installation of the Control Box

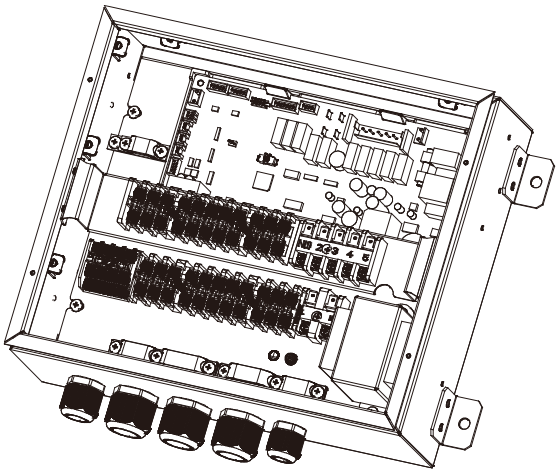

3.16.6.1 Mechanical Installation

(1) Fix the control box with its hanger brackets to the mounting surface.

(2) Open the lid of the control box.

(3) For electrical wiring: refer to the following contents.

(4) Install the screw nuts.

(5) Close the unnecessary openings.

(6) Close the lid securely after installation to ensure that the control box is watertight.

3.16.6.2 Wire connection Inside the Control Box

Wring of Control Accessories when One AHU-KIT is Connected to One AHU

Notes:

① Pull the wires inside through the screw nut and close the nut firmly in order to ensure a good pull relieve and water protection.

② The cables require an additional pull relief. Fixing the cable with the wire clamp.

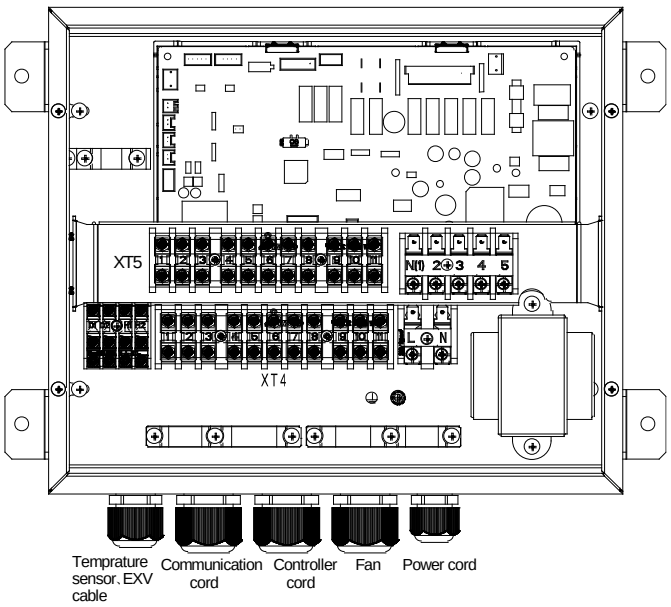

Precautions:

① Temperature sensor cable and remote controller wire should be kept away from power cable in a distance of at least 50mm. Violating this rule may generate electric noise and lead to malfunctions.

② Use wires as specified and connect them tightly with wiring terminals. Keep the wires in order and do not obstruct other devices. Insecure connection may result in overheating or even cause electric shock or fire hazard.

Wiring connection:

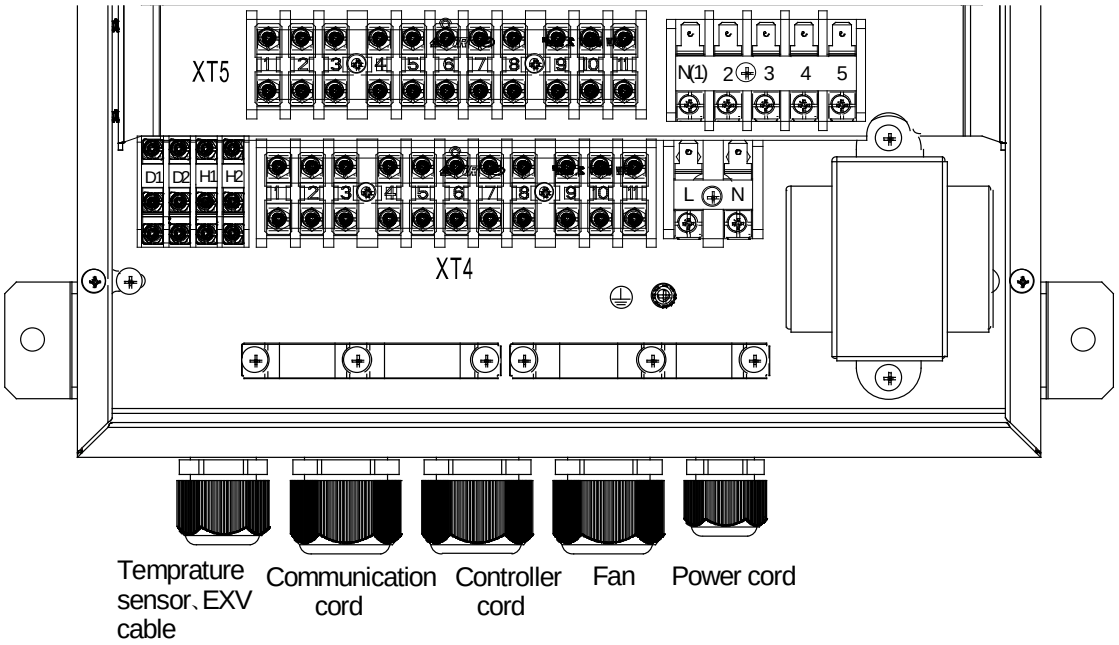

Connecting cables according to the following instructions, as figure shown above.

L..... Live

N..... Neutral

PE..... Protective earth (screw)

2.....High gear of fan

3.....Middle gear of fan

4..... Low gear of fan

D1/D2.....Communication wires

H1/H2.....Wired controller

Notes:

① The 2, 3, 4 of fan gear lines are shorted by the factory default.

② Neutral line of fan connects to the N (1).

③ It can be connected to any of them (2, 3, 4) when there is only one gear.

④ Disconnect the short cable between 2 and 3 when there are two gears, then connect the high gear cable to 2, and connect low gear cable to either 3 or 4.

⑤ When there are three gears, disconnect the short cables between 2 and 3, 3 and 4, then connect the high gear cable, middle gear cable and low gear cable to 2,3,4 for each.

⑥ Pull the wires inside through the screw nut and close the nut firmly in order to ensure a good pull relieve and water protection.

⑦ Put through the wires to the coil, tighten the coil while maintaining loose condition of wires to ensure it is not closely tied up and is waterproof.

⑧ Wiring connection of XT4 and XT5 refer to the following contents.

Wiring of Control Accessories when Several AHU-KITs are in Parallel Connection with One AHU

For the wring of control accessories when several AHU-KITs are in parallel connection with one AHU, connect fan control wire and external signal feedback signal wire of air handling unit to any one AHU-KIT. Please refer to the wiring method of AHU-KIT for the connection method.

3.16.7 Installation of the Temperature Sensors

3.16.7.1 Refrigerant Temperature Sensors

Location of the temperature sensor: A correct installation of the temperature sensors is required to ensure a good operation:

(1) IN Temp. sensor(Liquid Temp. sensor)

Install the IN temperature sensor after the distributor and on the coldest temperature pipe of a heat exchanger.

(2) OUT Temp. sensor (Gas Temp. sensor)

Install the OUT temperature sensor 200mm after the outlet of the heat exchanger.

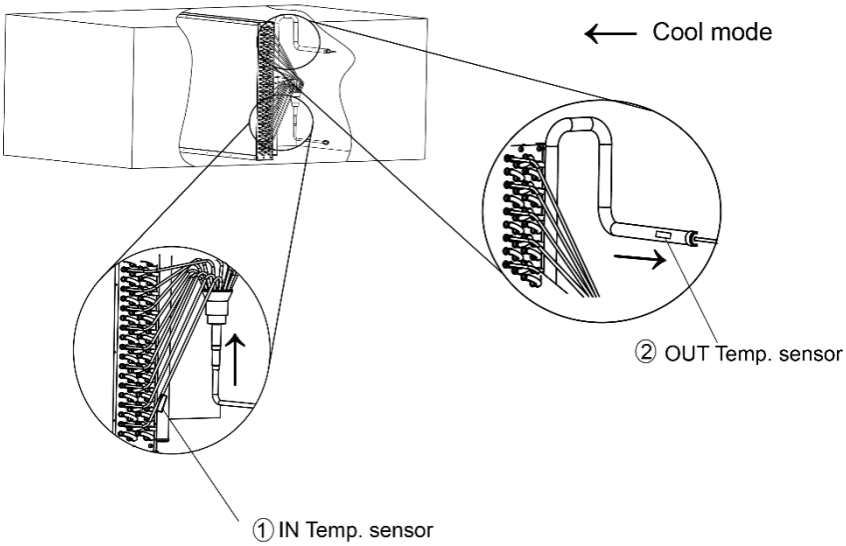

① IN Temp. sensor (Liquid Temp. sensor)

② OUT Temp. sensor (Gas Temp. sensor)

Installation of the temperature sensor cable:

(1) The length of temperature sensor wire is 10 m.

(2) Put the temperature sensor cable in an individual protective tube.

(3) Apply stress release in the temperature sensor wire to prevent the temperature sensor wire from getting loose due to stress. Stress or looseness of temperature sensor wire will lead to poor contact and inaccuracy of temperature measuring.

Fixation of the temperature sensor:

a) Put the temperature sensor wire slightly down to avoid water accumulation on top of the temperature sensor.

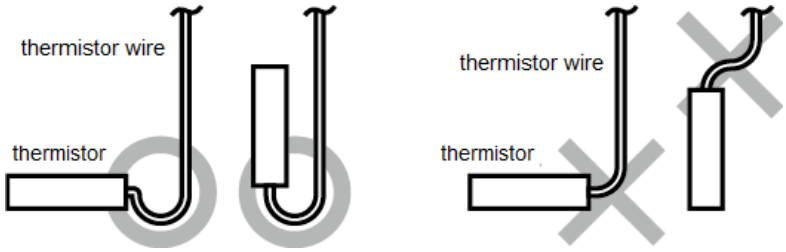

b) Keep the temperature sensor and air handling unit in good contact. Put the top of the temperature sensor on the air handling unit, because the top of temperature sensor is the most sensitive part. Please fixing the temperature sensor on the horizontal plane of copper tube (within ±30°), and make them close together.

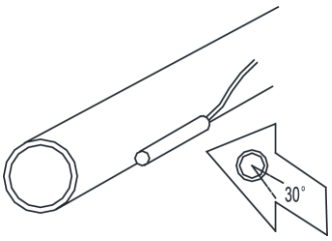

c) Fix the temperature sensor with insulating aluminum tape in order to ensure good heat transference.

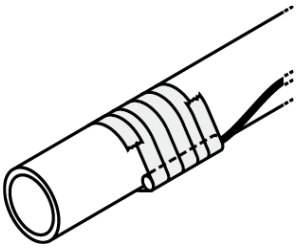

d) Cover the temperature sensor with rubber belt to prevent looseness of temperature sensor.

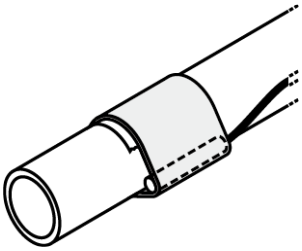

e) Use two wire ties to bind the temperature sensor securely.

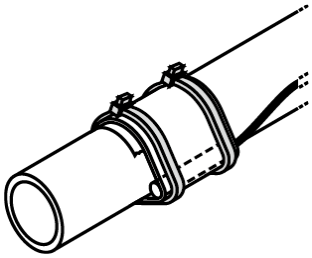

f) Wrap the temperature sensor with insulator.

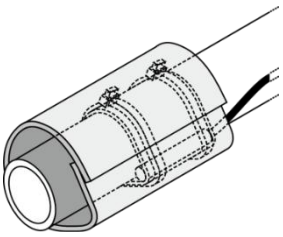

3.16.7.2 Air Temperature Sensor and Air Outlet Temperature Sensor

The air temperature sensor can be installed in the space which needs temperature control, or the inlet scoop of air handling unit.

The air temperature outlet sensor can be installed in the outlet scoop of air handling unit.

Notes:

① For connection to outdoor unit and to AHU-KIT unit: Pull the wires inside through the screw nut and close the nut firmly in order to ensure a good pull relieve and water protection.

② The cables require an additional pull relief. Fixing the cable with the wire clamp.

③ The connection of temperature sensor requires enough space.

3.16.7.3 Installation of Temperature Sensor When Several AHU-KITs are in Parallel Connection with One AHU

When several AHU-KITs are in parallel connection with one AHU, all linkage AHU-KIT inlet pipes' and outlet pipes' temperature sensor must be installed at the position of corresponding pipeline of air handling unit. Install the ambient temperature sensor at the same position of air return outlet. Please refer to above installation method of single AHU-KIT temperature sensor. The installation diagram is as below:

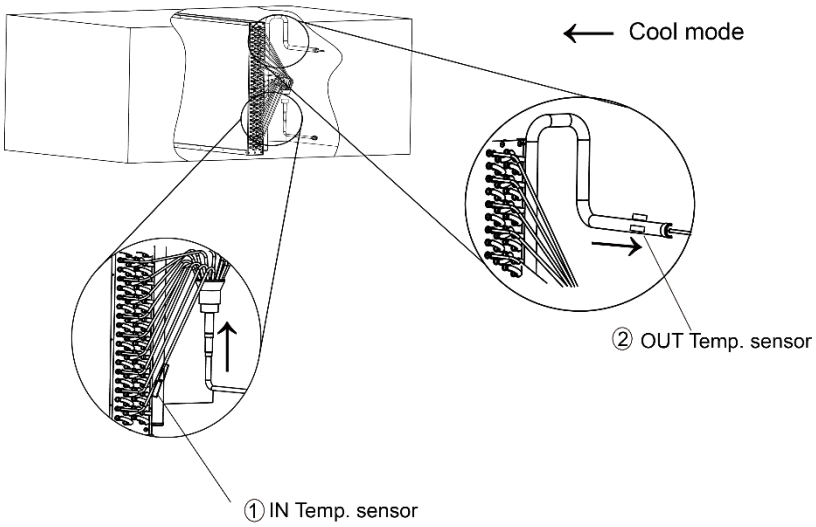

① IN Temp. sensor (Liquid Temp. sensor)

② OUT Temp. sensor (Gas Temp. sensor)

3.16.8 Installation of the EXV Cable

Installation steps:

(1) Making the cable terminal through the Cable-Cross Loop , and then winding the cable on the magnetic ring for three times, at last inserting the terminal into a corresponding slot(see circuit diagram).

(2) Using bundles to fix the magnetic ring is required. It's also need to insert the bundle into the reserved hole on the control box.

(3) Fixing the cable with the wire clamp, and tightening the Cable-Cross Loop.

Installation requirements:

(1) Ensure that the cable in the control box is in a relaxed state, and both the joint of terminal and the fixed place of magnetic ring are all not under a stress.

(2) Ensure that the cable sheath port is located in the control box in order to prevent the rain.

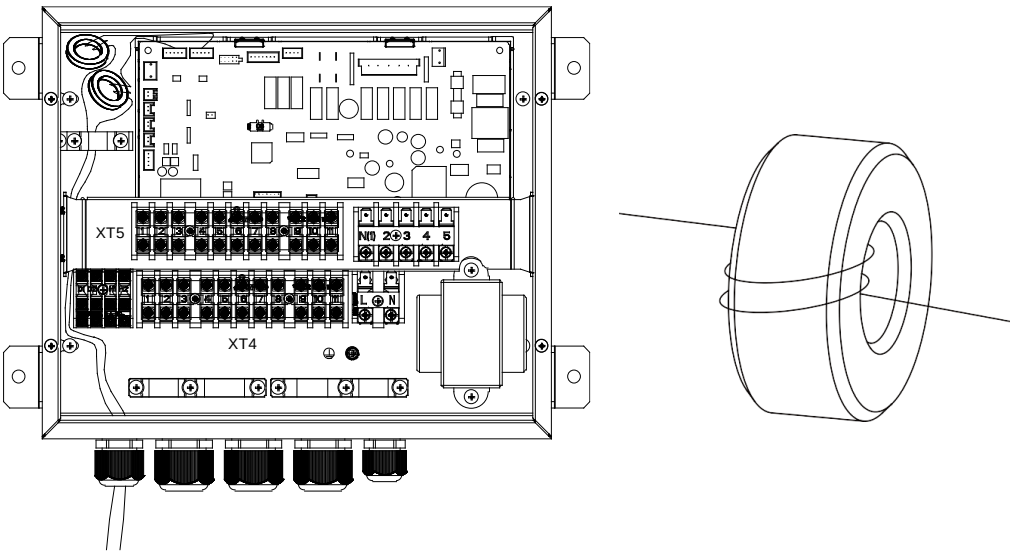

The quantity of expansion valve coil is determined by the actual number of fittings，The length of EXV Cable wire is 10 m (71,140,280,560 type) or 2.5 m (36 type).

3.16.9 Selection of air switch and power cord

Model	Power Cord Size	Air Switch Capacity(A)	Ground Wire	Power Cord
			Minimum Sectional Area(mm²)	Minimum Sectional Area(mm²)
GMV-N36U/A-T	220-240V/1ph/50Hz & 208-230V/1ph/60Hz	6	1.0	1.0
GMV-N71U/A-T		6	1.0	1.0
GMV-N140U/A-T		6	1.0	1.0
GMV-N280U/A-T		6	1.0	1.0
GMV-N560U/A-T		6	1.0	1.0
GMV-N36U/B-T		6	1.0	1.0
GMV-N71U/B-T		6	1.0	1.0
GMV-N140U/B-T		6	1.0	1.0
GMV-N280U/B-T		6	1.0	1.0
GMV-N560U/B-T		6	1.0	1.0
GMV-N36U/C-T		6	1.0	1.0
GMV-N71U/C-T		6	1.0	1.0
GMV-N140U/C-T		6	1.0	1.0
GMV-N280U/C-T		6	1.0	1.0
GMV-N560U/C-T		6	1.0	1.0

3.17 Installation of Concealed Floor Standing Type

3.17.1 Outline and installation dimension

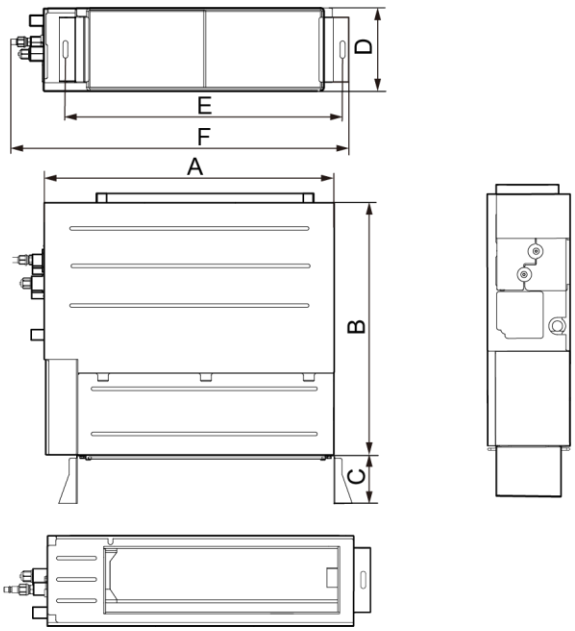

Below are dimensions of A, B, C, etc. for different models:

Unit: mm

Model	A	B	C	D	E	F
GMV-ND22ZA/A-T GMV-ND28ZA/A-T GMV-ND36ZA/A-T	700	615	120	200	665.5	837
GMV-ND45ZA/A-T	900	615	120	200	865.5	1045
GMV-ND56ZA/A-T GMV-ND63ZA/A-T GMV-ND71ZA/A-T	1100	615	120	200	1065.5	1236

3.17.2 Installation space

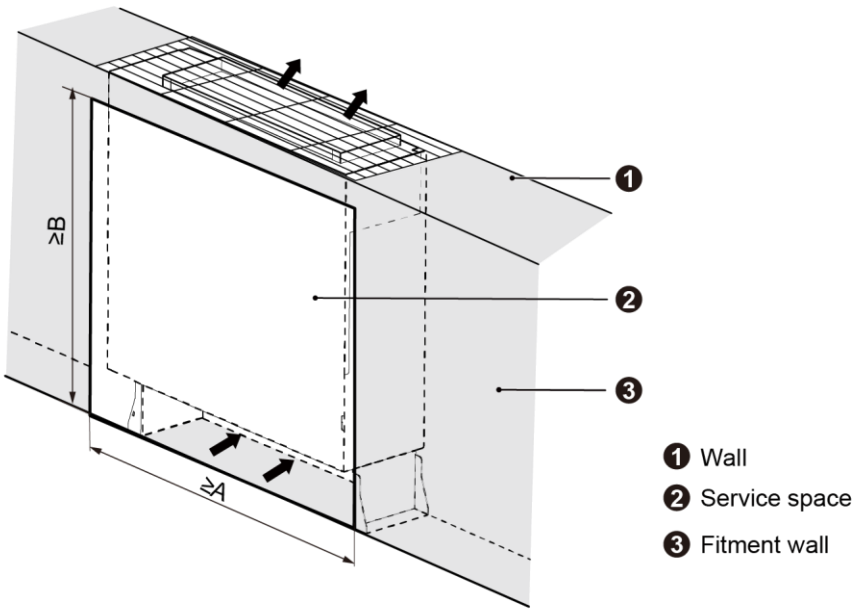

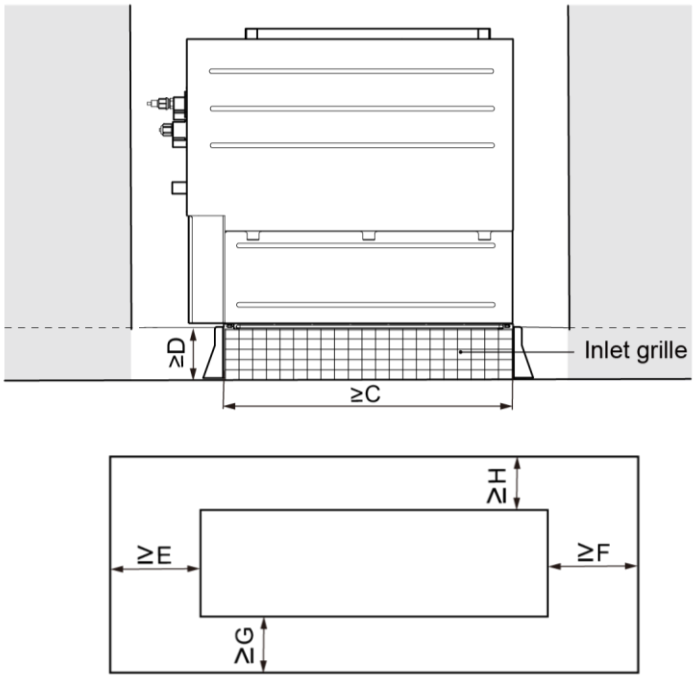

Below are dimensions of A, B, C, etc. for different models:

Unit: mm

Model	A	B	C	D	E	F	G	H
GMV-ND22ZA/A-T GMV-ND28ZA/A-T GMV-ND36ZA/A-T	1200	665	615	120	200	200	20	20
GMV-ND45ZA/A-T	1400	665	815	120	200	200	20	20
GMV-ND56ZA/A-T GMV-ND63ZA/A-T GMV-ND71ZA/A-T	1600	665	1015	120	200	200	20	20

3.17.3 Installation notice

- The unit shall be installed by the professional personnel according to this installation instruction to ensure proper use.
- Please contact the local Gree appointed service center before installation. Any malfunction caused by the unit that is not installed by the Gree appointed service center would probably not be dealt with on time because of the inconvenience of the business contact.
- It should be guided under the professional personnel when the air conditioner unit is moved to other place.
- Installation of the unit must be in accordance with National Electric Codes and local regulations.
- Improper installation will affect unit’s performance, so do not install the unit by yourself. Please contact local dealer to arrange professional technicians for the installation.
- Do not connect power until all installation work is finished.
- The height of ex-factory supporter is 120mm. If user wants to increase or decrease unit installation height, please purchase the supporter of different height. Other height of supporter is 80mm, or 160mm.
- Default height of inlet grille is 120mm. If the supporter of 80mm or 160mm high is selected, please change the height of inlet grille to 80mm or 160mm accordingly.

3.17.4 Selection of air switch and power cord

Model	Power Cord Size	Air Switch Capacity (A)	Minimum Sectional Area of Ground Wire (mm²/AWG)	Minimum Sectional Area of Power Cord (mm²/AWG)
GMV-ND22ZA/A-T	220-240V/50Hz 208-230V/60Hz	6	1.0/AWG18	1.0/AWG18
GMV-ND28ZA/A-T	220-240V/50Hz 208-230V/60Hz	6	1.0/AWG18	1.0/AWG18
GMV-ND36ZA/A-T	220-240V/50Hz 208-230V/60Hz	6	1.0/AWG18	1.0/AWG18
GMV-ND45ZA/A-T	220-240V/50Hz 208-230V/60Hz	6	1.0/AWG18	1.0/AWG18
GMV-ND56ZA/A-T	220-240V/50Hz 208-230V/60Hz	6	1.0/AWG18	1.0/AWG18
GMV-ND63ZA/A-T	220-240V/50Hz 208-230V/60Hz	6	1.0/AWG18	1.0/AWG18
GMV-ND71ZA/A-T	220-240V/50Hz 208-230V/60Hz	6	1.0/AWG18	1.0/AWG18

3.18 Installation of 360°Air Discharge Cassette Type Unit

3.18.1 Outline and installation dimension

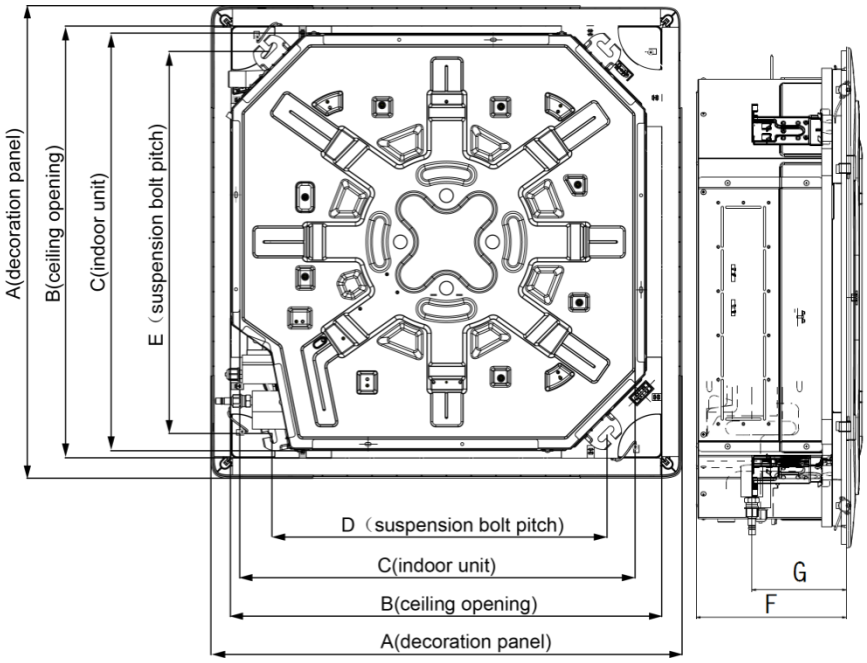

Model	A (mm)	B (mm)	C (mm)	D (mm)	E (mm)	F (mm)	G (mm)	Drainage Pipe(Outer Diameter× wall thickness) (mm)	Outer Diameter of Connection Pipe(mm)	
									Liquid pipe	Gas pipe
GMV-ND22T/C-T	950	890	840	680	780	275	180	Φ25×2.5	6.35	9.52
GMV-ND28T/C-T									6.35	9.52
GMV-ND36T/C-T									6.35	12.7
GMV-ND45T/C-T									6.35	12.7
GMV-ND50T/C-T									6.35	12.7
GMV-ND56T/C-T									9.52	15.9
GMV-ND63T/C-T									9.52	15.9
GMV-ND71T/C-T									9.52	15.9
GMV-ND80T/C-T									9.52	15.9
GMV-ND90T/C-T									9.52	15.9
GMV-ND100T/C-T									9.52	15.9
GMV-ND112T/C-T	950	890	840	680	780	325	180	Φ25×2.5	9.52	15.9
GMV-ND125T/C-T										
GMV-ND140T/C-T										
GMV-ND160T/C-T									9.52	19.05

Model	A (mm)	B (mm)	C (mm)	D (mm)	E (mm)	F (mm)	G (mm)	Drainage Pipe(Outer Diameter× wall thickness) (mm)	Outer Diameter of Connection Pipe(mm)	
									Liquid pipe	Gas pipe
GMV-ND22T/C1-T	950	890	840	680	780	200	174	Φ25×2.5	6.35	9.52
GMV-ND28T/C1-T	950	890	840	680	780	200	174		6.35	9.52
GMV-ND36T/C1-T	950	890	840	680	780	200	174		6.35	12.7
GMV-ND45T/C1-T	950	890	840	680	780	200	174		6.35	12.7
GMV-ND50T/C1-T	950	890	840	680	780	200	174		6.35	12.7

Model	A (mm)	B (mm)	C (mm)	D (mm)	E (mm)	F (mm)	G (mm)	Drainage Pipe(Outer Diameter× wall thickness) (mm)	Outer Diameter of Connection Pipe(mm)	
									Liquid pipe	Gas pipe
GMV-ND22T/D1-T	950	890	840	680	780	200	180	Φ25×2.5	6.35	9.52
GMV-ND28T/D1-T									6.35	9.52
GMV-ND36T/D1-T									6.35	12.7
GMV-ND45T/D1-T									6.35	12.7
GMV-ND50T/D1-T									6.35	12.7
GMV-ND56T/D1-T									9.52	15.9
GMV-ND63T/D1-T									9.52	15.9
GMV-ND71T/D1-T									9.52	15.9

Model	A (mm)	B (mm)	C (mm)	D (mm)	E (mm)	F (mm)	G (mm)	Drainage Pipe(Outer Diameter× wall thickness) (mm)	Outer Diameter of Connection Pipe(mm)	
									Liquid pipe	Gas pipe
GMV-ND80T/D1-T	950	890	840	680	780	240	175	Φ25×2.5	9.52	15.9
GMV-ND90T/D1-T									9.52	15.9
GMV-ND100T/D1-T									9.52	15.9
GMV-ND112T/D1-T									9.52	15.9
GMV-ND125T/D1-T	950	890	840	680	780	290	177			
GMV-ND140T/D1-T										

3.18.2 Installation space

Unit: mm

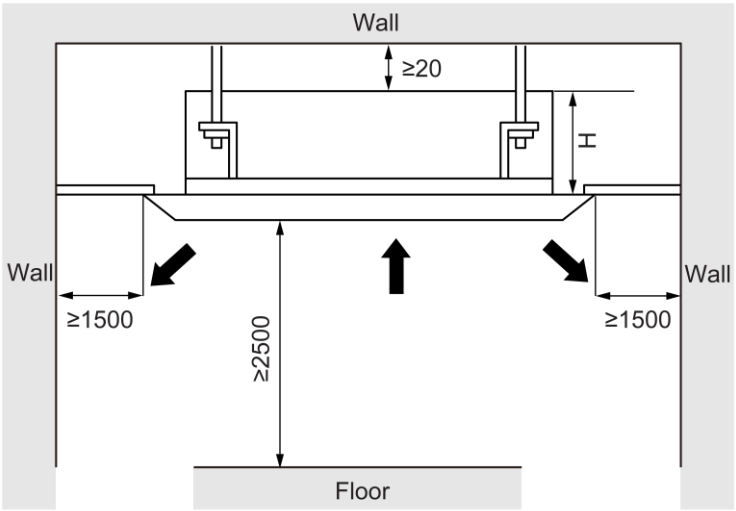

Model	H(mm)
GMV-ND22~100T/C-T	275
GMV-ND112~160T/C-T	325

Model	H(mm)
GMV-ND22~50T/C1-T	200

Model	H(mm)
GMV-ND22~71T/D1-T	235
GMV-ND80~112T/D1-T	275
GMV-ND125~140T/D1-T	325

3.18.3 Installation notice

- The unit shall be installed by the professional personnel according to this installation instruction to ensure proper use.
- Please contact the local Gree appointed service center before installation. Any malfunction caused by the unit that is not installed by the Gree appointed service center would probably not be dealt with on time because of the inconvenience of the business contact.
- It should be guided under the professional personnel when the air conditioner unit is moved to other place.
- The unit shall be installed in accordance with national standards or local regulations.

- Only qualified personnel can carry out installation work, please contact with local dealer before installation.
- Make sure all the installation work completed before energizing.

3.18.4 Selection of air switch and power cord

Model	Power Cord Size	Air Switch Capacity(A)	Minimum Sectional Area of Ground Wire (mm²)	Minimum Sectional Area of Power Cord (mm²)
GMV-ND22~160T/C-T	220-240V/50Hz 208-230V/60Hz	6	1.0/AWG18	1.0/AWG18

Model	Power Cord Size	Air Switch Capacity(A)	Minimum Sectional Area of Ground Wire (mm²)	Minimum Sectional Area of Power Cord (mm²)
GMV-ND22~50T/C1-T	220-240V/50Hz 208-230V/60Hz	6	1.0/AWG18	1.0/AWG18

Model	Power Cord Size	Air Switch Capacity(A)	Minimum Sectional Area of Ground Wire (mm²)	Minimum Sectional Area of Power Cord (mm²)
GMV-ND22~140T/D1-T	220-240V/50Hz 208-230V/60Hz	6	1.0/AWG18	1.0/AWG18

3.19 Installation of Heat Storage Module

3.19.1 Outline and installation dimension

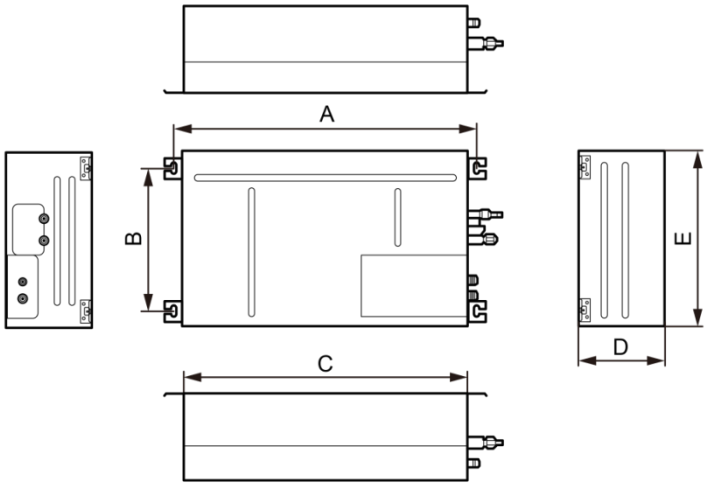

Fig 4.1

Model	A（mm）	B（mm）	C（mm）	D（mm）	E（mm）
XRZ180L/A-T	780	364	730	220	450

3.19.2 Installation space

Unit: mm

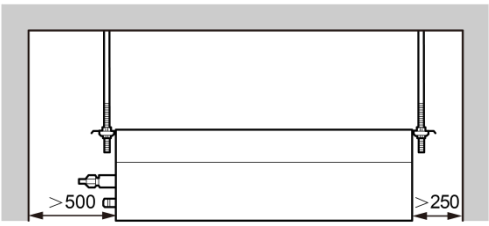

3.19.3 Installation notice

- The unit shall be installed by the professional personnel according to this installation instruction to ensure proper use.
- Please contact the local Gree appointed service center before installation. Any malfunction caused by the unit that is not installed by the Gree appointed service center would probably not be dealt with on time because of the inconvenience of the business contact.
- It should be guided under the professional personnel when the unit is moved to other place.
- The unit shall be installed in accordance with national standards or local regulations.
- Only qualified personnel can carry out installation work, please contact with local dealer before installation.
- Make sure all the installation work completed before energizing.

3.19.4 Selection of air switch and power cord

Model	Power Cord Size	Air Switch Capacity (A)	Minimum Sectional Area of Ground Wire (mm²)	Minimum Sectional Area of Power Cord (mm²)
XRZ180L/A-T	220-240V/50Hz 208-230V/60Hz	6	1.0/AWG18	1.0/AWG18

3.20 Installation of High Static Pressure Duct Type Indoor Unit

3.20.1 Outline and installation dimension

Model: GMV-ND22PHS/D-T ~ GMV-ND180PHS/D-T

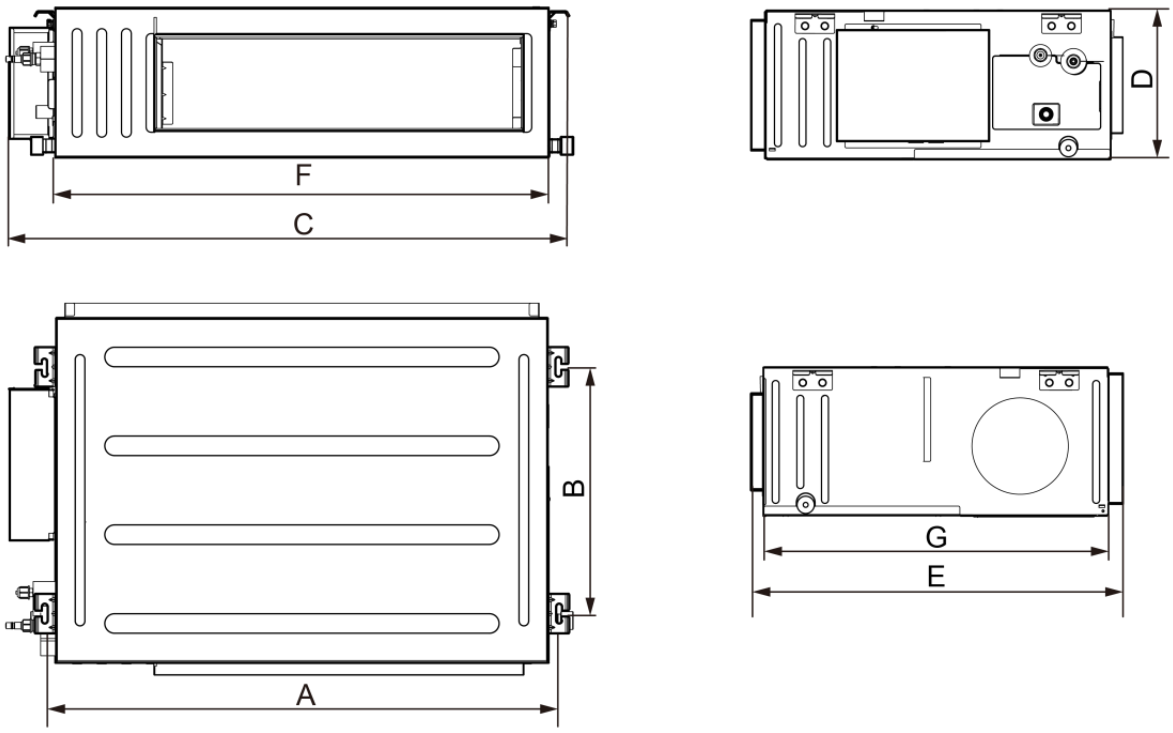

Below are dimensions of A, B, C, etc. for different models:

Unit: mm

Model	A	B	C	D	E	F	G
GMV-ND22~50PHS/D-T	740	500	830	300	754	700	700
GMV-ND56~80PHS/D-T	1040	500	1130	300	754	1000	700
GMV-ND90~160PHS/D-T	1440	500	1540	300	754	1400	700
GMV-ND180PHS/D-T	1440	500	1580	300	754	1400	700

3.20.2 Installation space

Unit: mm

Model: GMV-ND22PHS/D-T~ GMV-ND180PHS/D-T

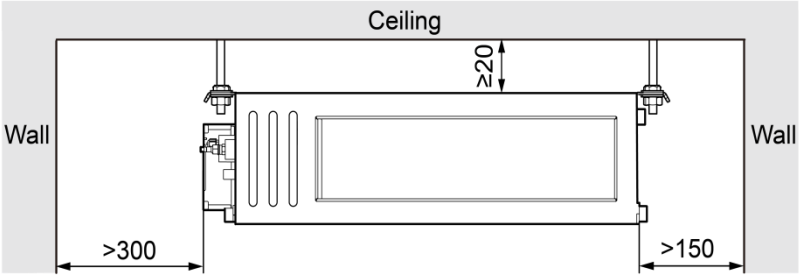

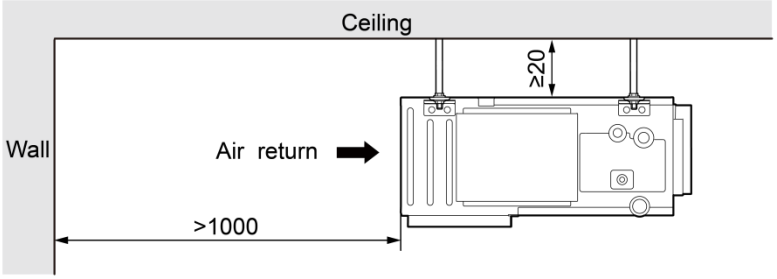

3.20.3 Installation notice

- The unit shall be installed by the professional personnel according to this installation instruction to ensure proper use.
- Please contact the local Gree appointed service center before installation. Any malfunction caused by the unit that is not installed by the Gree appointed service center would probably not be dealt with on time because of the inconvenience of the business contact.
- It should be guided under the professional personnel when the air conditioner unit is moved to other place.
- Installation of the unit must be in accordance with National Electric Codes and local regulations.
- Improper installation will affect unit's performance, so do not install the unit by yourself. Please contact local dealer to arrange professional technicians for the installation.
- Do not connect power until all installation work is finished.
- If the supply cord is damaged, it must be replaced by the manufacturer or its service agent or a similarly qualified person in order to avoid a hazard.

3.20.4 Selection of air switch and power cord

Model	Power Cord Size	Air Switch Capacity (A)	Minimum Sectional Area of Ground Wire (mm²/AWG)	Minimum Sectional Area of Power Cord (mm²/AWG)
GMV-ND22PHS/D-T	220-240V/50Hz 208-230V/60Hz	6	1.0/AWG18	1.0/AWG18
GMV-ND25PHS/D-T	220-240V/50Hz 208-230V/60Hz	6	1.0/AWG18	1.0/AWG18
GMV-ND28PHS/D-T	220-240V/50Hz 208-230V/60Hz	6	1.0/AWG18	1.0/AWG18
GMV-ND32PHS/D-T	220-240V/50Hz 208-230V/60Hz	6	1.0/AWG18	1.0/AWG18
GMV-ND36PHS/D-T	220-240V/50Hz 208-230V/60Hz	6	1.0/AWG18	1.0/AWG18
GMV-ND40PHS/D-T	220-240V/50Hz 208-230V/60Hz	6	1.0/AWG18	1.0/AWG18
GMV-ND45PHS/D-T	220-240V/50Hz 208-230V/60Hz	6	1.0/AWG18	1.0/AWG18
GMV-ND50PHS/D-T	220-240V/50Hz 208-230V/60Hz	6	1.0/AWG18	1.0/AWG18
GMV-ND56PHS/D-T	220-240V/50Hz 208-230V/60Hz	6	1.0/AWG18	1.0/AWG18
GMV-ND63PHS/D-T	220-240V/50Hz 208-230V/60Hz	6	1.0/AWG18	1.0/AWG18
GMV-ND71PHS/D-T	220-240V/50Hz 208-230V/60Hz	6	1.0/AWG18	1.0/AWG18
GMV-ND80PHS/D-T	220-240V/50Hz 208-230V/60Hz	6	1.0/AWG18	1.0/AWG18
GMV-ND90PHS/D-T	220-240V/50Hz 208-230V/60Hz	6	1.0/AWG18	1.0/AWG18
GMV-ND100PHS/D-T	220-240V/50Hz 208-230V/60Hz	6	1.0/AWG18	1.0/AWG18
GMV-ND112PHS/D-T	220-240V/50Hz 208-230V/60Hz	6	1.0/AWG18	1.0/AWG18
GMV-ND125PHS/D-T	220-240V/50Hz 208-230V/60Hz	6	1.0/AWG18	1.0/AWG18
GMV-ND140PHS/D-T	220-240V/50Hz 208-230V/60Hz	6	1.0/AWG18	1.0/AWG18
GMV-ND160PHS/D-T	220-240V/50Hz 208-230V/60Hz	6	1.0/AWG18	1.0/AWG18
GMV-ND180PHS/D-T	220-240V/50Hz 208-230V/60Hz	6	1.0/AWG18	1.0/AWG18

4 Installation of Drain Pipe

4.1 Precautions When Doing the Piping Work

(1) It is not allowed to connect the condensate drain pipe into waste pipe or other pipelines which are likely to produce corrosive or peculiar smell to prevent the smell from entering indoors or corrupt the unit.

(2) It is not allowed to connect the condensate drain pipe into rain pipe to prevent rain water from pouring in and cause property loss or personal injury.

(3) Condensate drain pipe should be connected into special drain system for air conditioner.

(4) Keep piping as short as possible and slope it downwards at a gradient of at least 1/100 so that air may not remain trapped inside the pipe.

(5) For example:

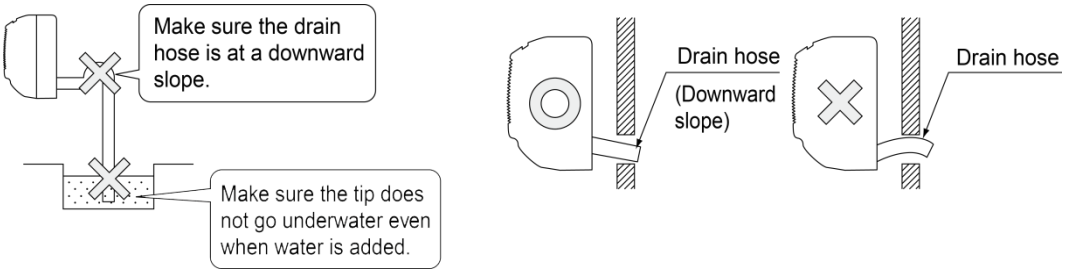

(6) Keep pipe size equal to or greater than that of the connecting pipe.

(7) Install the drain piping as shown and take measures against condensation. Improperly rigged piping could lead to leaks and eventually wet furniture and belongings.

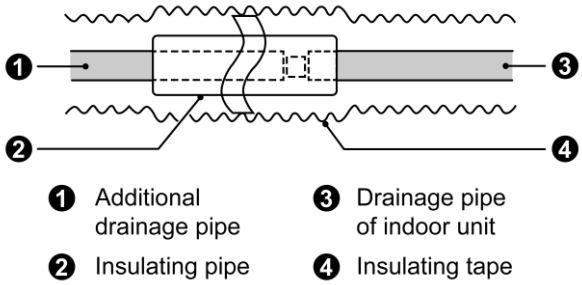

(8) When directly connecting a hard vinyl chloride pipe joint to the drain hose connected to the indoor unit, use a commercially available hard vinyl chloride pipe joint (nominal diameter 13mm).

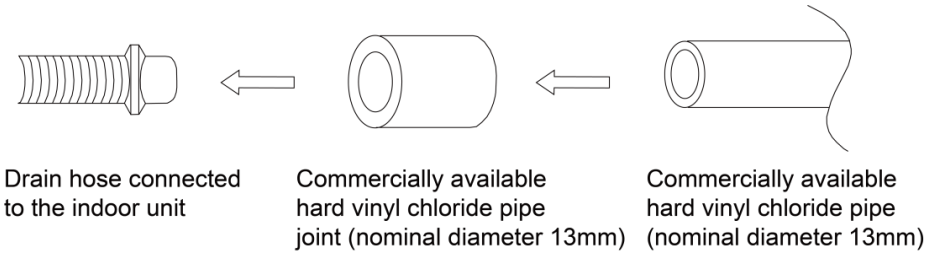

(9) Drain hose connected to the indoor unit commercially available hard vinyl chloride pipe joint (nominal diameter 13mm) commercially available hard vinyl chloride pipe (nominal diameter 13mm).

(10) Do not connect the drain piping directly to sewage pipes that smell of ammonia. The ammonia in the sewage might enter the indoor unit through the drain pipes and corrode the heat exchanger.

4.2 Installing the Drain Pipes

- Insert the drain hose into the drain outlet, and tighten the clamp securely with tape.
- Tighten the clamp until the screw head is less than 4 mm from the hose.

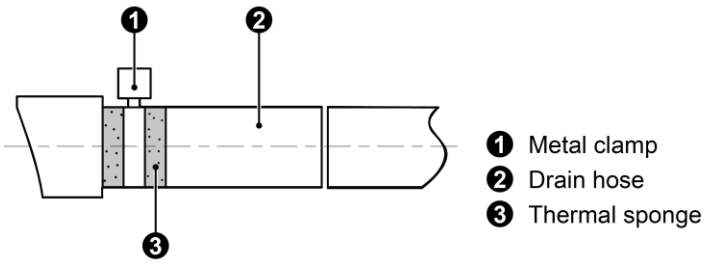

- Insulate the pipe clamp and the drain hose using heat insulation sponge.

Unit: mm

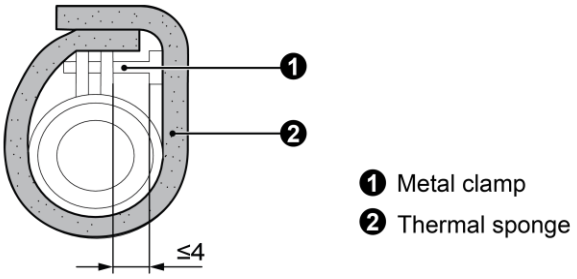

- Install water trap as shown below.
- Install one water trap for each unit.
- Installation of water trap shall consider easy cleaning in the future.

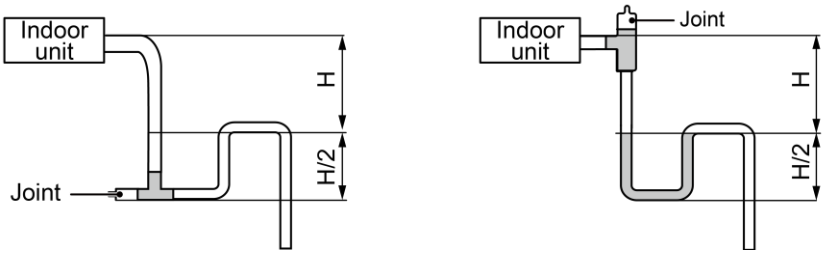

- Connection of drainage branch pipe to the standpipe or horizontal pipe of drainage main pipe.
- The horizontal pipe cannot be connected to the vertical pipe at a same height. It can be connected in a manner as shown below:

  No.1: Connection of drainage pipe joints.

  No.2: Connection of downspout elbow.

  No.3: Inserting pipe connection.

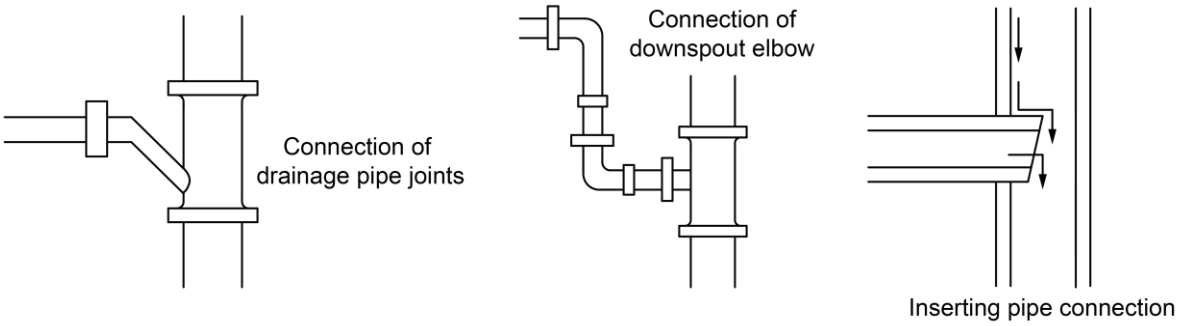

- When unifying multiple drain pipes, install the pipes as shown below. Select converging drain pipes whose gauge is suitable for the operating capacity of the unit (take the cassette type unit for example).

Unit: mm

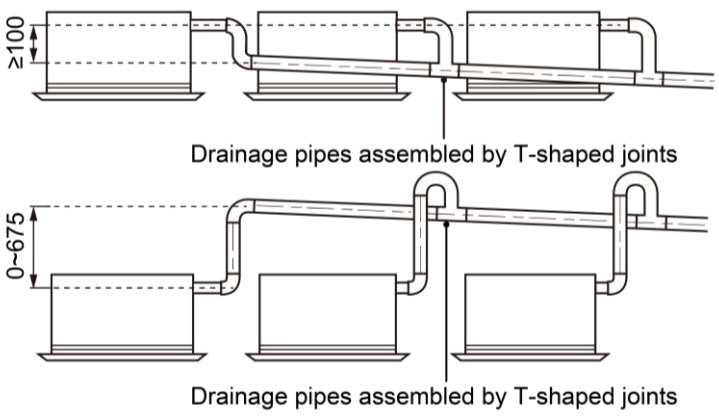

4.3 Precautions When Doing Riser Piping Work

- Make sure that heat insulation work is executed on the following 2 spots to prevent any possible water leakage due to dew condensation.
  a) Connect the drain hose to the drain raiser pipe, and insulate them.
  b) Connect the drain hose to the drain outlet on the indoor unit, and tighten it with the clamp (take the cassette type unit for example).

Unit: mm

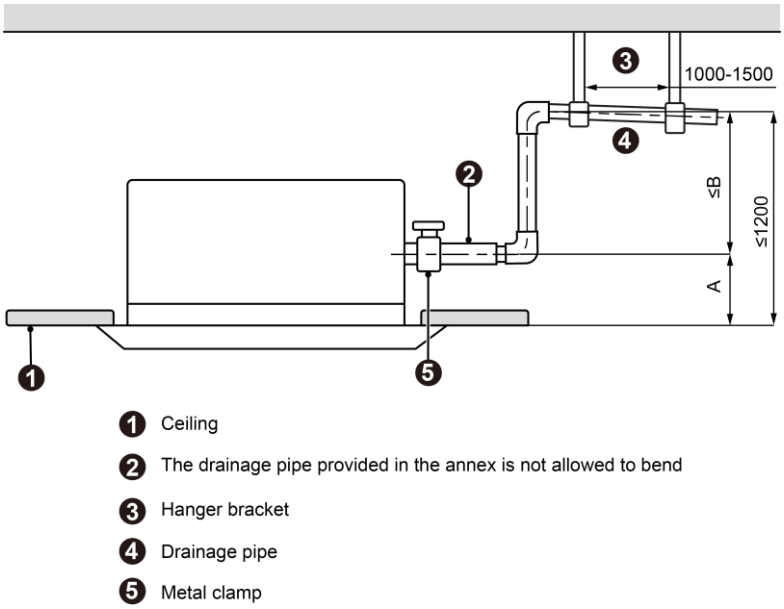

- Drainage pipes should have a downward slope of at least 1%~2%, in order to prevent pipes from sagging; install hanger bracket at intervals of 1000~1500mm. (take the cassette type unit for example).

Unit: mm

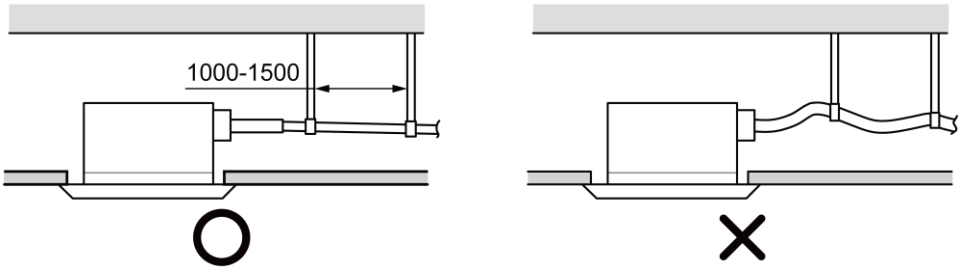

4.4 Testing of Drain Piping

- After piping work is finished, check if drainage flows smoothly.
- Shown in the figure, Add approximately 1liter of water slowly into the drain pan and check drainage flow during COOL running.

5 Electrical Installation

- The wiring must be in accordance with the local rules.
- Rated supply voltage and special circuit for air conditioner must be used.
- Do not pull the power cord forcefully.
- All the electric installations must be carried out by specialist technicians in accordance with the local laws, rules and these instructions.
- The diameter of flexible wire should be wide enough. Replace the damaged power cord and connecting wire with special flexible wire.
- The earthing shall be reliable and connected to the special earthing device on the construction. The installation must be done by specialist technicians. The leak protection switch and air switch with enough capacity must be installed. The air switch shall have both the magnetic tripping and thermal tripping functions to ensure protection against the short circuit and overload.
- Earthed Requirements.
- The air conditioner belongs to I type electric appliances. The reliable earthed action is a must.
- The yellow and green wire inside the air conditioner is the earthed wire. Do not use it for other purpose or even cut off it. Do not fix it with tapping screw. Otherwise, it may cause electric shock.
- The earthed resistance must meet the requirements of national standard GB17790.
- There should be reliable earthed terminal for the power supply. Never connect the earth lead to the following articles:

  ①water pipe; ②gas pipe; ③drain pipe; ④unreliable place considered by professionals.

MAINTENANCE

1 Troubleshooting

1.1 Malfunction List for the Wired Controller

Error Code	Content	Error Code	Content	Error Code	Content
L0	Indoor Unit Error	L9	Quantity Of Group Control Indoor Units Setting Error	d7	Humidity Sensor Error
L1	Indoor Fan Protection	LA	Indoor Units Incompatibility Error	d8	Water Temperature Sensor Error
L2	E-heater Protection	LH	Low Air Quality Warning	d9	Jumper Cap Error
L3	Water Full Protection	LC	Outdoor-Indoor Incompatibility Error	dA	Indoor Unit Hardware Address Error
L4	Wired Controller Power Supply Error	d1	Indoor Unit Circuit Board Error	dH	Wired Controller Circuit Board Error
L5	Anti-freezing Protection	d3	Ambient Temperature Sensor Error	dC	Capacity DIP Switch Setting Error
L7	No Master Indoor Unit Error	d4	Inlet Pipe Temperature Sensor Error	dL	Outlet Air Temperature Sensor Error
L8	Power Insufficiency Protection	d6	Outlet Pipe Temperature Sensor Error	dE	Indoor Unit CO_2 Sensor Error
o1	Over low voltage of IDU bus	o2	Over high voltage of IDU bus	o3	IDU IPM module protection
o4	IDU startup failure	o5	IDU overcurrent protection	o6	IDU current detecting circuit error
o7	IDU non-synchronism protection	o8	IDU drive communication error	o9	Communication error of IDU master controller
oA	Over high temperature of IDU module	ob	Temperature sensor error of IDU module	oC	IDU charging circuit error
o0	Other drive error	db	Special Code: Field Debugging Code	-	-

1.2 Exception Analyzing and Troubleshooting

1.2.1 “d1” Indoor circuit board error

Error display: IDU wired controller and IDU receive light board will display

Error judgment condition and method:

Check if the reading of address chip and memory chip of IDU mainboard is normal. If the data of address chip and memory chip cannot be read, it is abnormal.

Possible reason:

■Address chip is abnormal

■Memory chip is abnormal. Replace main control board directly

Troubleshooting:

Replace main control board directly

1.2.2 “d3” Ambient temperature sensor error

Error display: IDU wired controller and IDU receive light board will display

Error judgment condition and method:

Sample the AD value of temperature sensor through temperature sensor detecting circuit and judge the range of AD value, If the sampling AD value exceeds upper limit and lower limit in 5 seconds continuously, report the error.

Possible reason:

■Poor contact between ambient temperature sensor and terminal in mainboard interface

■Ambient temperature sensor is abnormal

■Detecting circuit is abnormal

Troubleshooting:

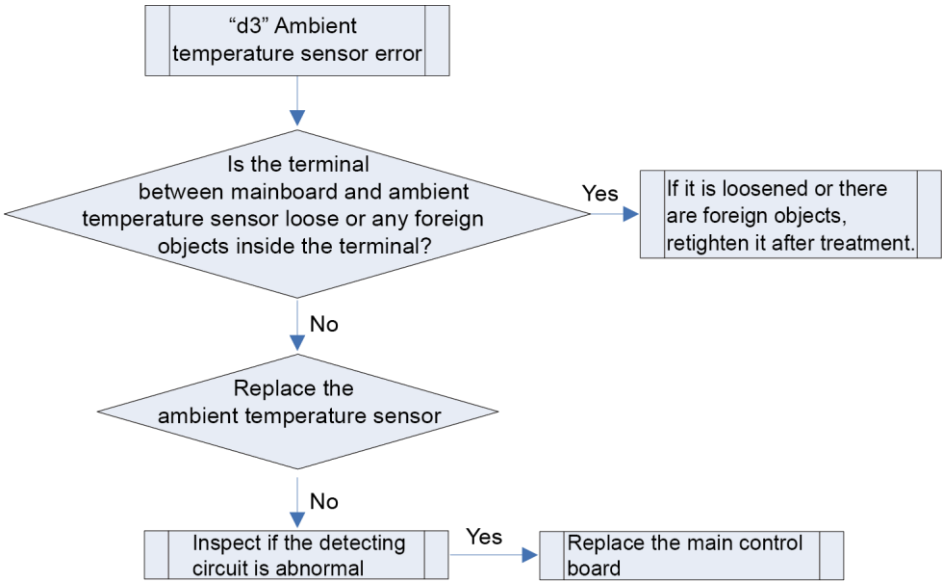

1.2.3 “d4” Inlet pipe temperature sensor error

Error display: IDU wired controller and IDU receive light board will display

Error judgment condition and method:

Sample the AD value of temperature sensor through temperature sensor detecting circuit and judge the range of AD value. If the sampling AD value exceeds upper limit and lower limit in 5 seconds continuously, report the error.

Possible reason:

■Poor contact between inlet pipe temperature sensor and terminal in mainboard interface

■Inlet pipe temperature sensor is abnormal

■Detecting circuit is abnormal

Troubleshooting:

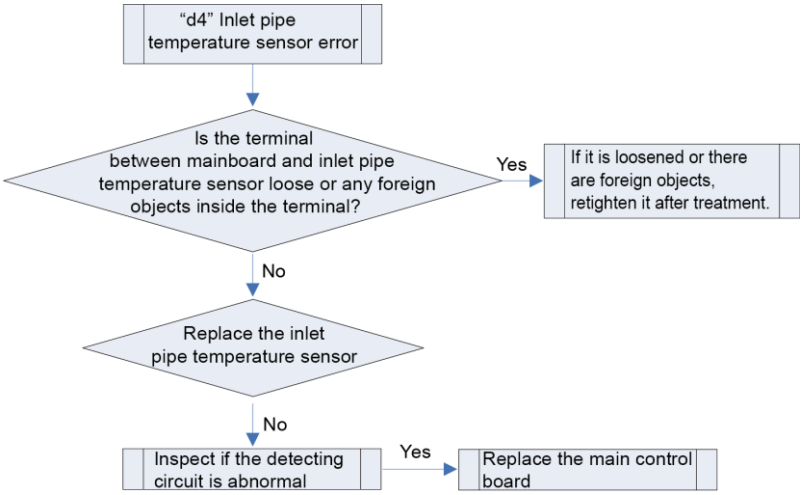

1.2.4 "d6" Outlet pipe temperature sensor error

Error display: IDU wired controller and IDU receive light board will display

Error judgment condition and method:

Sample the AD value of temperature sensor through temperature sensor detecting circuit and judge the range of AD value. If the sampling AD value exceeds upper limit and lower limit in 5 seconds continuously, report the error.

Possible reason:

■Poor contact between outlet pipe temperature sensor and terminal in mainboard interface

■Outlet pipe temperature sensor is abnormal

■Detecting circuit is abnormal

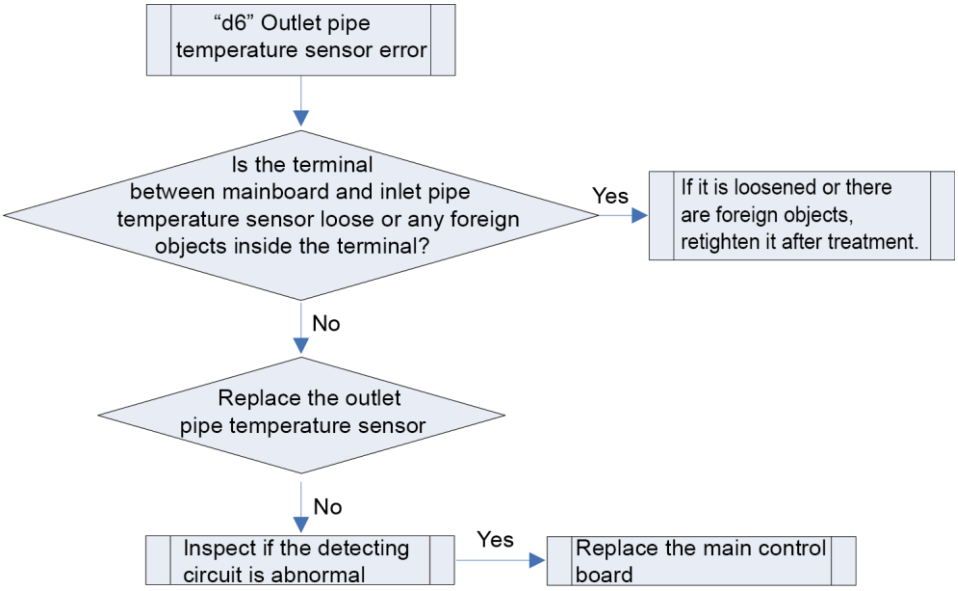

1.2.5 “d7” Humidity sensor error

Error display: IDU wired controller and IDU receive light board will display

Error judgment condition and method:

Sample the AD value of temperature sensor through temperature sensor detecting circuit and judge the range of AD value. If the sampling AD value exceeds upper limit and lower limit in 5 seconds continuously, report the error.

Possible reason:

■Poor contact between humidity sensor and terminal in mainboard interface

■Humidity sensor is abnormal

■Detecting circuit is abnormal

Troubleshooting:

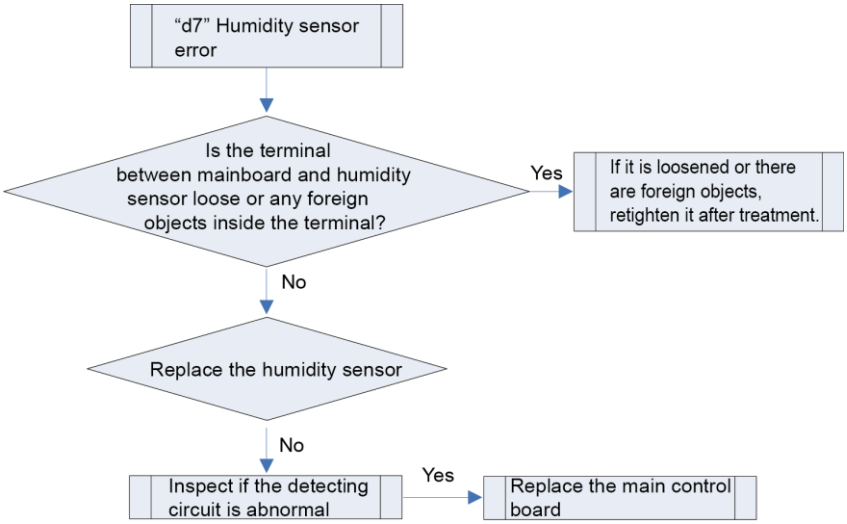

1.2.6 “d9” Jumper cap error

Error display: IDU wired controller and IDU receive light board will display

Error judgment condition and method:

Possible reason:

If jumper cap model doesn’t match with mainboard, report the error

■Jumper cap is not installed

■Jumper cap model is wrong

■Detecting circuit is abnormal

Troubleshooting:

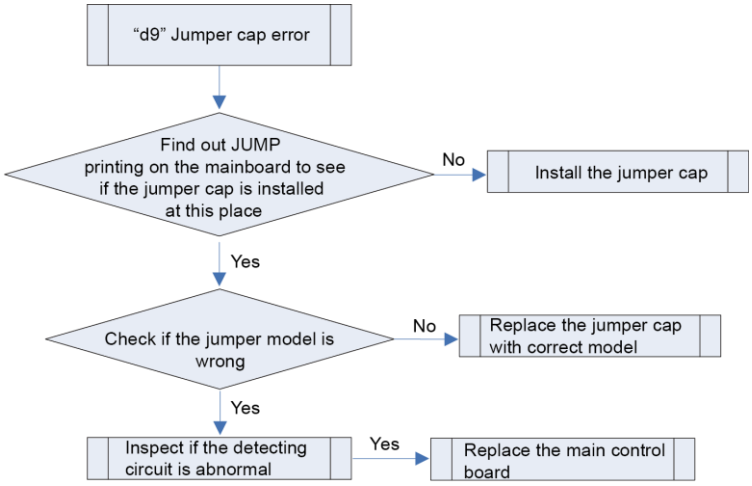

1.2.7 "dA" IDU network address error

Error display: IDU wired controller and IDU receive light board will display

Error judgment condition and method:

Through testing the IDU address chip and IP address, if address chip cannot be read, IDU IP is 0 or IP is in conflict, report the error.

Possible reason:

■ODU allocated address is wrong

■IDU treatment is wrong

■Address chip is abnormal

Troubleshooting:

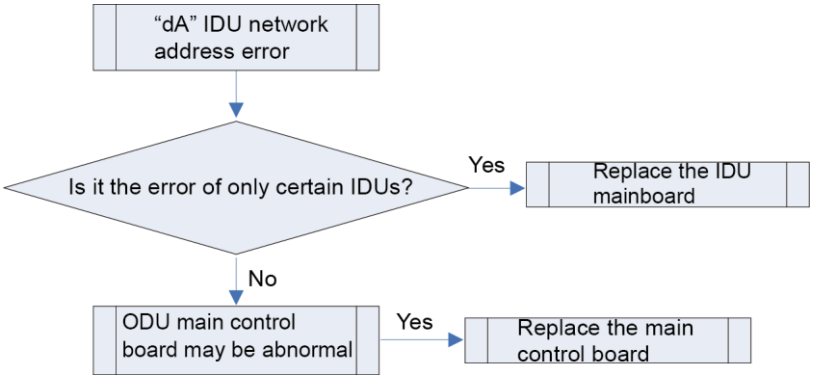

1.2.8 "dH" wired controller circuit board error

Error display: IDU wired controller and IDU receive light board will display

Error judgment condition and method:

Wired controller IIC communication is abnormal

Possible reason:

■Communication of wired controller touch button board and display board IIC is abnormal;

■Read and write of wired controller memory chip IIC is abnormal (when memory chip is existed);

Troubleshooting:

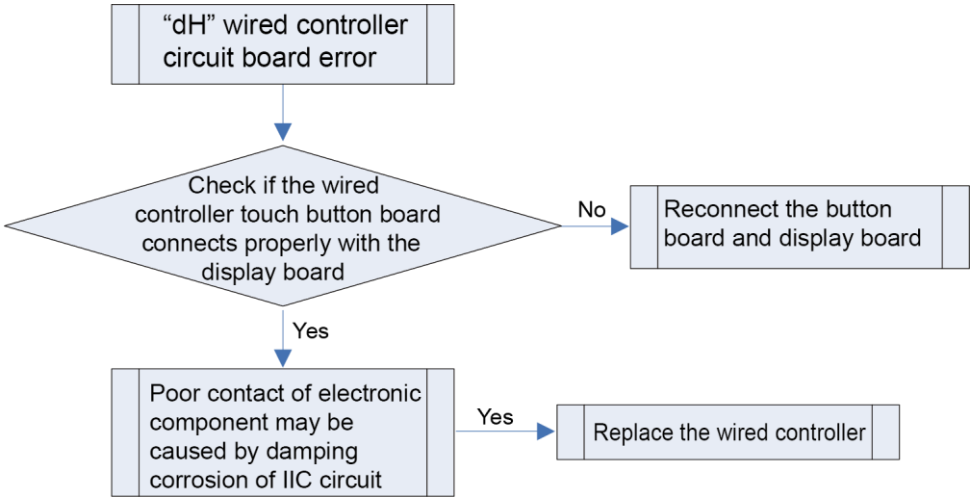

1.2.9 "dC" Capacity DIP switch setting error

Error display: IDU wired controller and IDU receive light board will display

Error judgment condition and method:

If capacity DIP switch is set to the wrong position, report the error.

Possible reason:

■Capacity DIP switch is set to the wrong position

■Detecting circuit is abnormal

Troubleshooting:

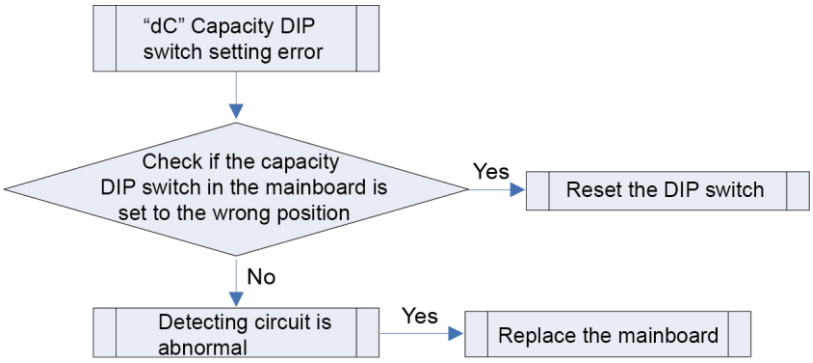

1.2.10 "dL" Air outlet temperature sensor error

Error display: IDU wired controller and IDU receive light board will display

Error judgment condition and method:

Sample the AD value of temperature sensor through temperature sensor detecting circuit and judge the range of AD value. If the sampling AD value exceeds upper limit and lower limit in 5 seconds continuously, report the error.

Possible reason:

■Poor contact between air outlet temperature sensor and terminal in mainboard interface

■Air outlet temperature sensor is abnormal

■Detecting circuit is abnormal

Troubleshooting:

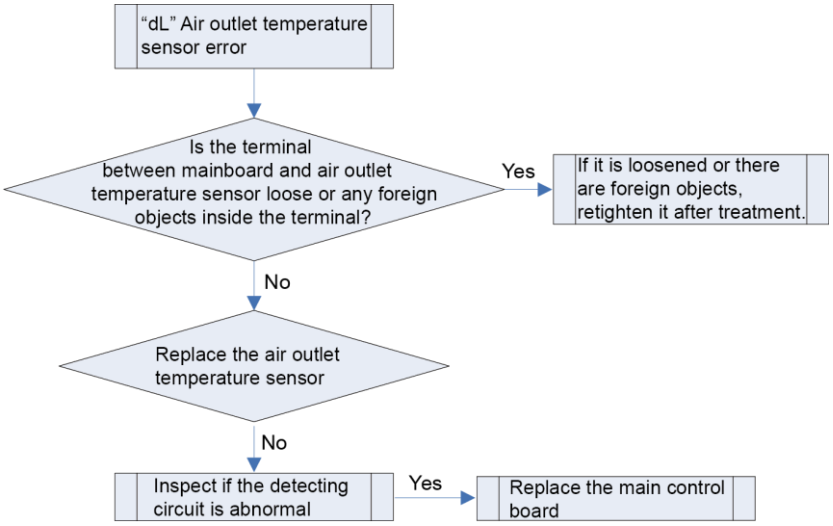

1.2.11 "db" Project debugging

Error display: ODU mainboard, IDU wired controller and IDU receive light board will display

Error judgment condition and method:

This is a status code of project debugging, not an error code. When IDU or ODU displays this code, it means the unit is under debugging status and the IDU cannot be operated.

Troubleshooting: ——

Possible reason: ——

1.2.12 "L1" Indoor fan protection

Error display: IDU wired controller and IDU receive light board will display

Error judgment condition and method:

Check if the rotation speed of IDU is too slow, or it stops rotation, or protection signal of outdoor fan is transferred. If yes, it is judged that indoor fan protection occurs.

Possible reason:

■Motor stops operation or it is blocked

■IDU mainboard is abnormal

Troubleshooting:

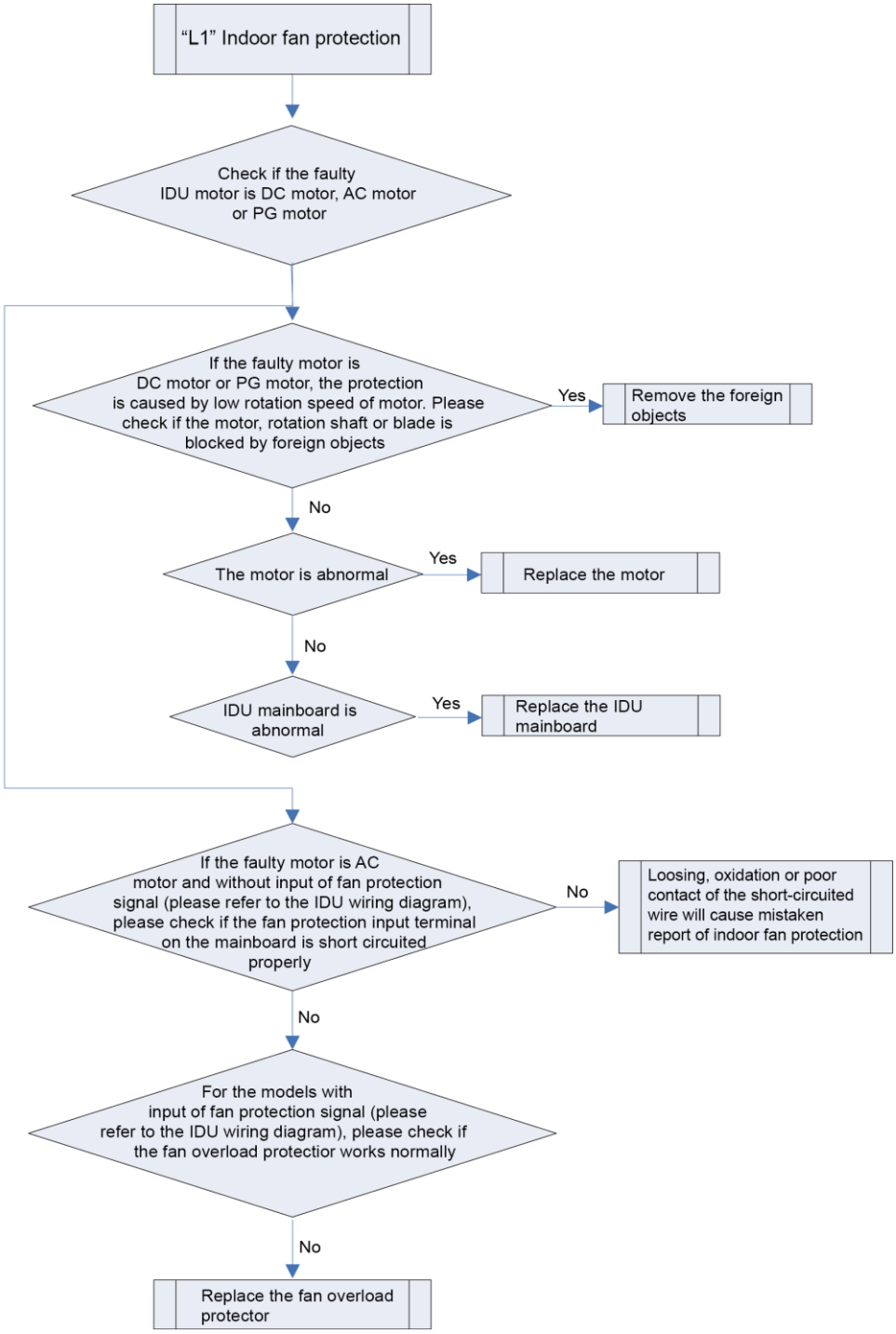

1.2.13 "L3" Water full protection

Error display: IDU wired controller and IDU receive light board will display

Error judgment condition and method:

Check the status of IDU float switch. When water level is too high, float switch is activated, so water full protection happens.

Possible reason:

■IDU is installed improperly

■Drainage pump is broken

■Float switch operates abnormally

■IDU mainboard is abnormal

Troubleshooting:

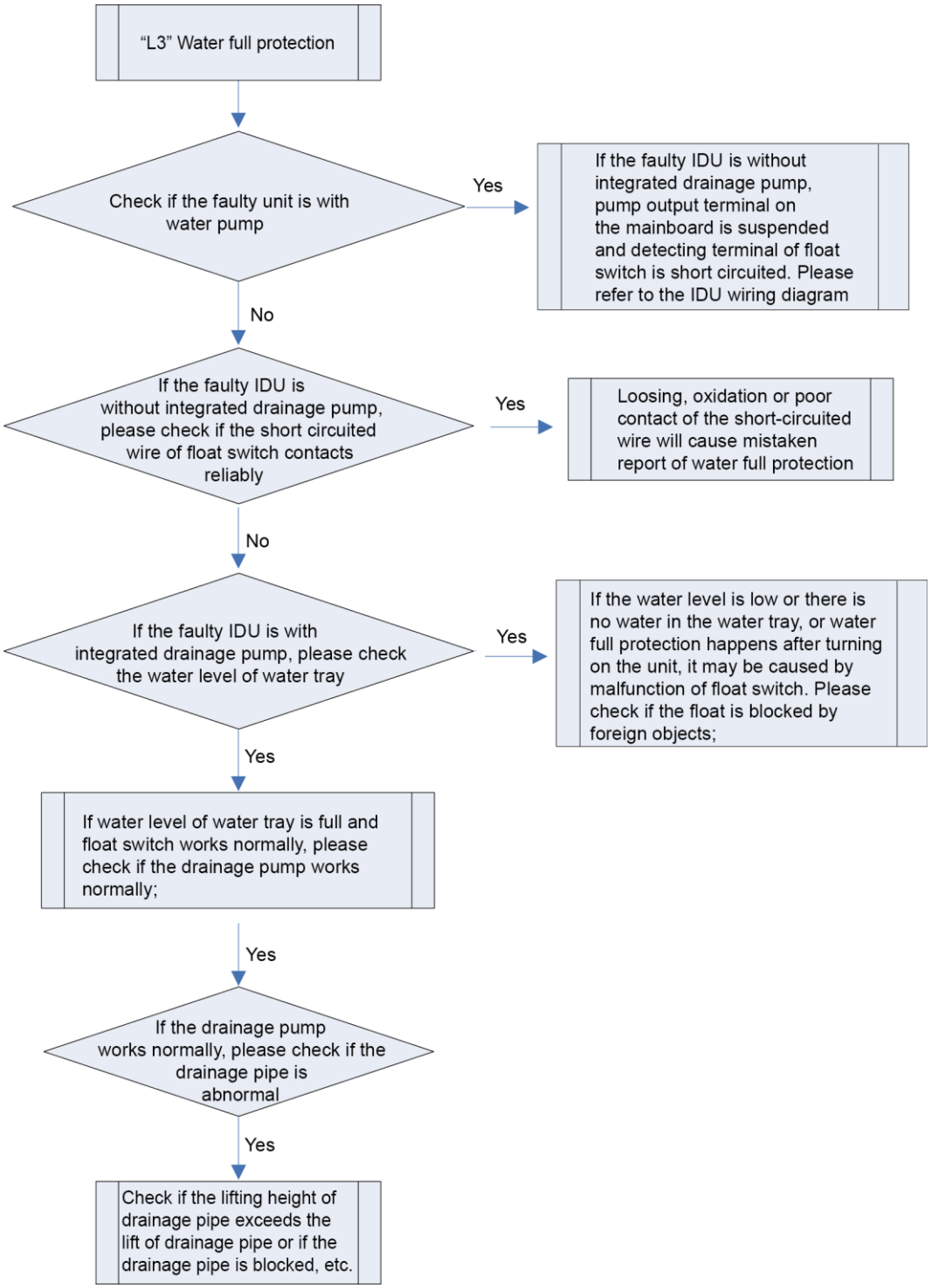

1.2.14 “L4” Power supply overcurrent protection

Error display: IDU wired controller and IDU receive light board will display

Error judgment condition and method:

Check if the power supply current from IDU to wired controller is normal. If power supply current is too big, it is judged that the current is abnormal.

Possible reason:

■Power supply conducting wire of wired controller is short circuited

■IDU mainboard is abnormal

■Mainboard of wired controller is abnormal

Troubleshooting:

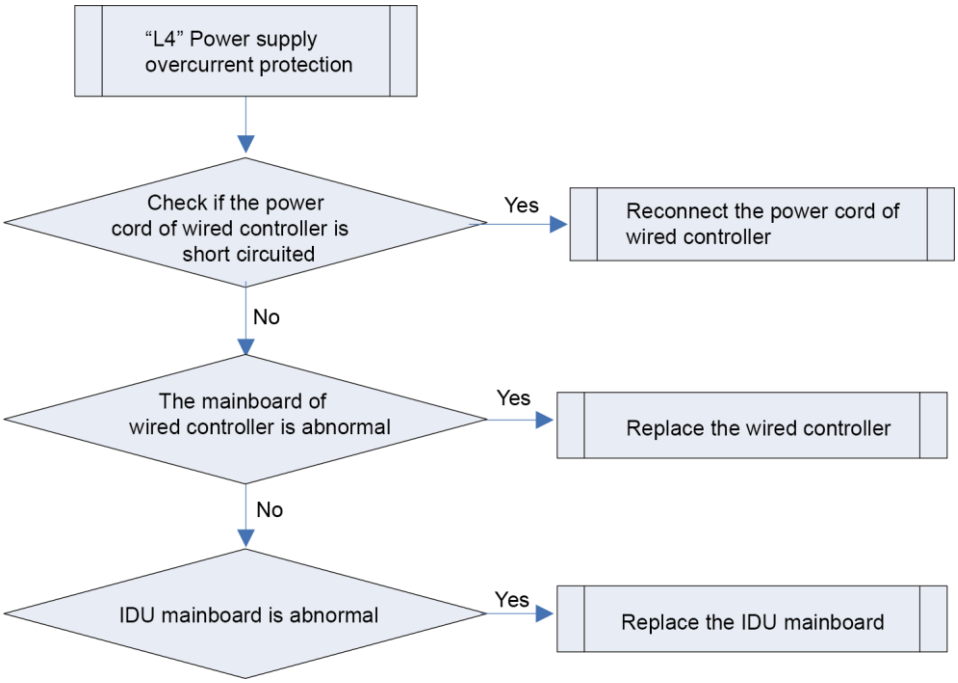

1.2.15 “L5” Freeze protection

Error display: IDU wired controller and IDU receive light board will display

Error judgment condition and method:

Check IDU pipe temperature. When pipe temperature is too low, freeze protection will be activated to prevent freezing damage of evaporator.

Possible reason:

■IDU filter and evaporator are dirty

■IDU motor is blocked

■Refrigerant amount is insufficient

■Ambient temperature of IDU and ODU is too low