MULTI VRF-Ⅱ INDOOR UNIT SERVICE MANUAL

EUROPEAN/LATIN AMETICA (R410A)

GREE ELECTRIC APPLIANCES, INC.OF ZHUHAI

CONTENTS

PRODUCT 2
1 PRODUCT LIST 2
1.1 Floor Standing Type 2
1.2 High Static Pressure Duct Type 2
1.3 Low Static Pressure Duct Type 3
1.4 4-way Cassette 3
1.5 Compact 4-way Cassette 4
1.6 2-way Cassette 4
1.7 1-way Cassette 4
1.8 Floor Ceiling 4
1.9 Fresh air Processing 5
1.10 Slim Duct Type 5
1.11 Air Handler type Indoor Unit 5
1.12 Console Type Indoor Unit 6
1.13 Wall Mounted type Indoor Unit 6
1.14 Super High Static Pressure Duct Type Indoor Unit 9
2 NOMENCLATURE 10
2.1 Nomenclature of indoor units 10
3 SPECIFICATIONS 11
3.1 Floor Standing Type 11
3.2 High Static Pressure Duct Type 12
3.3 Low Static Pressure Duct Type 13
3.4 4-way Cassette Type 15
3.5 Compact 4-way Cassette Type 16
3.6 2-way Cassette Type 17
3.7 1-way Cassette Type 18
3.8 Floor Ceiling Type 19
3.9 Fresh air Processing Unit 20
3.10 Slim Duct Type 22
3.11 Air Handler type Indoor Unit 23
3.12 Console Type Indoor Unit 24
3.13 Wall Mounted type Indoor Unit 26
3.14 Super High Static Pressure Duct Type Indoor Unit 32
CONTROL 36
1 OPERATION FLOWCHART 36
2 WIRED CONTROLLER 37
2.1 Control panel 37
2.2 Installation and removal 39
3 REMOTE CONTROLLER 42
3.1 Remote controller YAP1F 42
3.2 Remote controller YV1L1 43
4 PANEL DISPLAY 44
4.1 Control Panel 44
4.2 Operational Instruction 44
5 INTRODUCTION TO UNIT FUNCTIONS 48
INSTALLATION 71
1 ENGINEERING INSTALLATION PREPARATION AND NOTICE 72
1.1 Installation notice 72
1.2 Installation key points and importance 72
2 INSTALLATION MATERIALS SELECTION 73
2.1 Refrigerant piping 73
2.2 Condensate water pipe 74
2.3 Insulation material 74
2.4 Communication cable and control cable 74
2.5 Power cable 75
2.6 Hanger rod and support 75
3 INSTALLATION OF INDOOR UNIT 75

3.1 Installation of Floor Standing indoor unit 75
3.2 Installation of High Static Pressure Duct Type unit 77
3.3 Installation of Low Static Pressure Duct Type unit 80
3.4 Installation of 4-way Cassette Type unit 83
3.5 Installation of Compact 4-way Cassette Type unit 85
3.6 Installation of Compact 2-way Cassette Type unit 87
3.7 Installation of Compact 1-way Cassette Type unit 89
3.8 Installation of Floor Ceiling Type unit 90
3.9 Installation of Fresh air Processing unit 92
3.10 Installation of Slim Duct Type unit 95
3.11 Installation of Air Handler type Indoor Unit 97
3.12 Console Type Indoor Unit 102
3.13 Installation of Super High Static Pressure Duct Type Indoor Unit 103
4 INSTALLATION OF DRAIN PIPE 106
4.1 Precautions When Doing the Piping Work 106
4.2 Installing the Drain Pipes 106
4.3 Precautions when doing riser piping work 108
4.4 Testing of Drain Piping 109
5 ELECTRICAL INSTALLATION 110

MAINTENANCE 112

1 TROUBLESHOOTING 112
2 AFTER-SALES EMERGENCY MASURES 112
3 WIRING DIAGRAM 112
3.1 Floor Standing Type 113
3.2 High Static Pressure Duct Type 113
3.3 Low Static Pressure Duct Type 115
3.4 4-way Cassette Type 116
3.5 Compact 4-way Cassette Type 117
3.6 2-way Cassette Type 118
3.7 1-way Cassette Type 118
3.8 Floor Ceiling Type 119
3.9 Fresh air Processing Unit 119
3.10 Slim Duct Type 121
3.11 Air Handler type Indoor Unit 122
3.12 Console Type Indoor Unit 123
3.13 Wall Mounted type Indoor Unit 123
3.14 Super High Static Pressure Duct Type Indoor Unit 124
4 DISASSEMBLY AND ASSEMBLY PROCEDURE OF MAIN PARTS 126
4.1 Floor Standing Type 126
4.2 High Static Pressure Duct Type 126
4.3 Low Static Pressure Duct Type 128
4.4 4-way Cassette Type 129
4.5 Compact 4-way Cassette Type 132
4.6 2-way Cassette Type 136
4.7 1-way Cassette Type 138
4.8 Floor Ceiling Type 141
4.9 Fresh air Processing Unit 143
4.10 Slim Duct Type 147
4.11 Console Type Indoor Unit 148
4.12 Wall Mounted type Indoor Unit 149
4.13 Super High Static Pressure Duct Type Indoor Unit 151
5 EXPLODED VIEWS AND PART LIST 152
5.1 Floor Standing Type 152
5.2 High Static Pressure Duct Type 153
5.3 Low Static Pressure Duct Type 161
5.4 4-way Cassette Type 171
5.5 Compact 4-way Cassette Type 177
5.6 2-way Cassette Type 179
5.7 1-way Cassette Type 181
5.8 Floor Ceiling Type 184

5.9 Fresh air Processing Unit 191
5.10 Slim Duct Type 198
5.11 Air Handler type Indoor Unit 202
5.12 Console Type Indoor Unit 206
5.13 Wall Mounted type Indoor Unit 208
5.14 Super High Static Pressure Duct Type Indoor Unit 213

PRODUCT

PRODUCT

1 Product List

1.1 Floor Standing Type

Model	Product Code	Cooling Capacity	Heating Capacity	Power Supply	Refrigerant	Appearance
		kW	kW			
GMV-ND100L/A-T	CM300N0060	10.0	11.0	220-240V~50Hz 208-230V~60Hz	R410A	
GMV-ND140L/A-T	CM300N0070	14.0	15.0			

1.2 High Static Pressure Duct Type

Model	Product Code	Cooling Capacity	Heating Capacity	Power Supply	Refrigerant	Appearance
		kW	kW			
GMV-ND56PHS/A-T	CM800N3690	5.6	6.3	220-240V~50Hz 208-230V~60Hz	R410A	
GMV-ND63PHS/A-T	CM800N3700	6.3	7.1			
GMV-ND71PHS/A-T	CM800N3540	7.1	8.0			
GMV-ND80PHS/A-T	CM800N3710	8.0	9.0			
GMV-ND90PHS/A-T	CM800N3550	9.0	10.0			
GMV-ND100PHS/A-T	CM800N3650	10.0	11.2			
GMV-ND112PHS/A-T	CM800N3660	11.2	12.5			
GMV-ND125PHS/A-T	CM800N3670	12.5	14.0			
GMV-ND140PHS/A-T	CM800N3680	14.0	16.0			
GMV-ND160PHS/A-T	CM810N0250	16.0	18.0			
GMV-ND224PH/A-T	CM800N3721	22.4	25.0			
GMV-ND280PH/A-T	CM800N3731	28.0	31.0			

1.3 Low Static Pressure Duct Type

Model	Product Code	Cooling Capacity	Heating Capacity	Power Supply	Refrigerant	Appearance
		kW	kW			
GMV-ND22PLS/A-T	CM800N3370	2.2	2.5	220-240V~50Hz 208-230V~60Hz	R410A	
GMV-ND25PLS/A-T	CM800N3380	2.5	2.8			
GMV-ND28PLS/A-T	CM800N3490	2.8	3.2			
GMV-ND32PLS/A-T	CM800N3390	3.2	3.6			
GMV-ND36PLS/A-T	CM800N3500	3.6	4.0			
GMV-ND40PLS/A-T	CM800N3400	4.0	4.5			
GMV-ND45PLS/A-T	CM800N3410	4.5	5.0			
GMV-ND50PLS/A-T	CM800N3420	5.0	5.6			
GMV-ND56PLS/A-T	CM800N3510	5.6	6.3			
GMV-ND63PLS/A-T	CM800N3430	6.3	7.1			
GMV-ND71PLS/A-T	CM800N3520	7.1	8.0			
GMV-ND80PLS/A-T	CM800N3440	8.0	9.0			
GMV-ND90PLS/A-T	CM800N3450	9.0	10.0			
GMV-ND100PLS/A-T	CM800N3460	10.0	11.2			
GMV-ND112PLS/A-T	CM800N3530	11.2	12.5			
GMV-ND125PLS/A-T	CM800N3480	12.5	14.0			
GMV-ND140PLS/A-T	CM800N3470	14.0	16.0			

1.4 4-way Cassette

Model	Product Code	Cooling Capacity	Heating Capacity	Power Supply	Refrigerant	Appearance
		kW	kW			
GMV-ND28T/A-T	CM500N0380	2.8	3.2	220-240V~50Hz 208-230V~60Hz	R410A	
GMV-ND36T/A-T	CM500N0390	3.6	4.0			
GMV-ND45T/A-T	CM500N0400	4.5	5.0			
GMV-ND50T/A-T	CM500N0410	5.0	5.6			
GMV-ND56T/A-T	CM500N0420	5.6	6.3			
GMV-ND63T/A-T	CM500N0430	6.3	7.1			
GMV-ND71T/A-T	CM500N0440	7.1	8.0			
GMV-ND80T/A-T	CM500N0450	8.0	9.0			
GMV-ND90T/A-T	CM500N0460	9.0	10.0			
GMV-ND100T/A-T	CM500N0470	10.0	11.2			
GMV-ND112T/A-T	CM500N0480	11.2	12.5			
GMV-ND125T/A-T	CM500N0490	12.5	14.0			
GMV-ND140T/A-T	CM500N0500	14.0	16.0			
GMV-ND160T/A-T	CM500N0660	16.0	17.5			

1.5 Compact 4-way Cassette

Model	Product Code	Cooling Capacity	Heating Capacity	Power Supply	Refrigerant	Appearance
		kW	kW			
GMV-ND22T/B-T	CM500N0610	2.2	2.5	220-240V~ 50Hz 208-230V~ 60Hz	R410A	
GMV-ND28T/B-T	CM500N0620	2.8	3.2			
GMV-ND36T/B-T	CM500N0630	3.6	4.0			
GMV-ND45T/B-T	CM500N0640	4.5	5.0			
GMV-ND50T/B-T	CM500N0600	5.0	5.6			
GMV-ND56T/B-T	CM500N0650	5.6	6.3			

1.6 2-way Cassette

Model	Product Code	Cooling Capacity	Heating Capacity	Power Supply	Refrigerant	Appearance
		kW	kW			
GMV-ND28TS/A-T	CM500N0680	2.8	3.2	220-240V~ 50Hz 208-230V~ 60Hz	R410A	
GMV-ND36TS/A-T	CM500N0690	3.6	4.0			
GMV-ND45TS/A-T	CM500N0700	4.5	5.0			
GMV-ND50TS/A-T	CM500N0710	5.0	5.6			
GMV-ND56TS/A-T	CM500N0720	5.6	6.3			
GMV-ND63TS/A-T	CM500N0730	6.3	7.1			
GMV-ND71TS/A-T	CM500N0740	7.1	8.0			

1.7 1-way Cassette

Model	Product Code	Cooling Capacity	Heating Capacity	Power Supply	Refrigerant	Appearance
		kW	kW			
GMV-ND22TD/A-T	CM502N0140	2.2	2.5	220-240V~ 50Hz 208-230V~ 60Hz	R410A	
GMV-ND28TD/A-T	CM502N0100	2.8	3.2			
GMV-ND36TD/A-T	CM502N0110	3.6	4.0			
GMV-ND45TD/A-T	CM502N0120	4.5	5.0			
GMV-ND50TD/A-T	CM502N0130	5.0	5.6			

1.8 Floor Ceiling

Model	Product Code	Cooling Capacity	Heating Capacity	Power Supply	Refrigerant	Appearance
		kW	kW			
GMV-ND28ZD/A-T	CM600N0350	2.8	3.2	220-240V~50 Hz 208-230V~60 Hz	R410A	
GMV-ND36ZD/A-T	CM600N0360	3.6	4.0			
GMV-ND50ZD/A-T	CM600N0320	5.0	5.6			
GMV-ND63ZD/A-T	CM600N0400	6.3	7.1			
GMV-ND71ZD/A-T	CM600N0410	7.1	8.0			
GMV-ND90ZD/A-T	CM600N0370	9.0	10.0			
GMV-ND112ZD/A-T	CM600N0330	11.2	12.5			
GMV-ND125ZD/A-T	CM600N0380	12.5	14.0			
GMV-ND140ZD/A-T	CM600N0390	14.0	16.0			

1.9 Fresh air Processing

Model	Product Code	Cooling Capacity	Heating Capacity	Power Supply	Refrigerant	Appearance
		kW	kW			
GMV-NX140P/A(X1.2)-K	CM800N3610	14.0	10.0	220-240V/1~50Hz	R410A	
GMV-NX224P/A(X2.0) -M	CM800N3620	22.4	16.0	380-415V/3~50Hz		
GMV-NX280P/A(X2.5) -M	CM800N3630	28.0	20.0			
GMV-NX280P/A(X3.0) -M	CM800N3640	28.0	20.0			
GMV-NX450P/A(X4.0) -M	CM800N3740	45.0	32.0			
GMV-NDX224P/A-T	CM810N0260	22.4	16.0	220-240V~50Hz 208-230V~60Hz		
GMV-NDX280P/A-T	CM810N0270	28.0	20.0			

1.10 Slim Duct Type

Model	Product Code	Cooling Capacity	Heating Capacity	Power Supply	Refrigerant	Appearance
		kW	kW			
GMV-ND22PL/B-T	CM800N3560	2.2	2.5	220-240V~50Hz 208-230V~60Hz	R410A	
GMV-ND25PL/B-T	CM810N0010	2.5	2.8			
GMV-ND28PL/B-T	CM810N0020	2.8	3.2			
GMV-ND32PL/B-T	CM800N3570	3.2	3.6			
GMV-ND36PL/B-T	CM810N0030	3.6	4.0			
GMV-ND40PL/B-T	CM800N3580	4.0	4.5			
GMV-ND45PL/B-T	CM810N0040	4.5	5.0			
GMV-ND50PL/B-T	CM810N0050	5.0	5.6			
GMV-ND56PL/B-T	CM800N3590	5.6	6.3			
GMV-ND63PL/B-T	CM810N0060	6.3	7.0			
GMV-ND72PL/B-T	CM800N3600	7.2	8.0			

1.11 Air Handler type Indoor Unit

Model	Product Code	Cooling Capacity	Heating Capacity	Power Supply	Refrigerant	Appearance
		kW	kW			
GMV-NR71A/A-D	CM810N0200	7.1	8.0	208-230V~60Hz	R410A	
GMV-NR90A/A-D	CM810N0210	9.0	10.0			
GMV-NR100A/A-D	CM810N0220	10.0	11.0			
GMV-NR112A/A-D	CM810N0230	11.2	12.5			
GMV-NR140A/A-D	CM810N0240	14.0	15.0			

1.12 Console Type Indoor Unit

Model	Product Code	Cooling Capacity	Heating Capacity	Power Supply	Refrigerant	Appearance
		kW	kW			
GMV-ND22C/A-T	CM400N0140	2.2	2.5	220-240V~ 50Hz 208-230V~ 60Hz	R410A	
GMV-ND28C/A-T	CM400N0070	2.8	3.2			
GMV-ND36C/A-T	CM400N0080	3.6	4.0			
GMV-ND45C/A-T	CM400N0150	4.5	5.0			
GMV-ND50C/A-T	CM400N0090	5.0	5.5			

1.13 Wall Mounted type Indoor Unit

Model	Product Code	Cooling Capacity	Heating Capacity	Power Supply	Refrigerant	Appearance
		kW	kW			
GMV-N22G/A3A-K	CM100N1350	2.2	2.5	208-230V~ 60Hz	R410A	
GMV-N28G/A3A-K	CM100N1340	2.8	3.2			
GMV-N36G/A3A-K	CM100N1360	3.6	4.0			
GMV-N45G/A3A-K	CM100N1370	4.5	5.0			
GMV-N50G/A3A-K	CM100N1330	5.0	5.8			
GMV-N56G/A3A-K	CM100N1380	5.6	6.3			
GMV-N63G/A3A-K	CM100N1390	6.3	7.0			
GMV-N71G/A3A-K	CM100N1320	7.1	7.5			
GMV-N22G/A2A-K	CM100N1690	2.2	2.5	208-230V~ 60Hz		
GMV-N28G/A2A-K	CM100N1700	2.8	3.2			
GMV-N36G/A2A-K	CM100N1710	3.6	4.0			
GMV-N45G/A2A-K	CM100N1720	4.5	5.0			
GMV-N50G/A2A-K	CM100N1730	5.0	5.8			
GMV-N56G/A2A-K	CM100N1740	5.6	6.3			
GMV-N63G/A2A-K	CM100N1750	6.3	7.0			
GMV-N71G/A2A-K	CM100N1760	7.1	7.5			
GMV-N22G/A4A-K	CM100N1530	2.2	2.5	208-230V~ 60Hz		
GMV-N28G/A4A-K	CM100N1540	2.8	3.2			
GMV-N36G/A4A-K	CM100N1550	3.6	4.0			
GMV-N45G/A4A-K	CM100N1560	4.5	5.0			
GMV-N50G/A4A-K	CM100N1570	5.0	5.8			
GMV-N56G/A4A-K	CM100N1580	5.6	6.3			
GMV-N63G/A4A-K	CM100N1590	6.3	7.0			

GMV-N71G/A4A-K	CM100N1600	7.1	7.5			
GMV-N22G/A8A-K	CM100N1770	2.2	2.5	208-230V~60Hz		
GMV-N28G/A8A-K	CM100N1780	2.8	3.2			
GMV-N36G/A8A-K	CM100N1790	3.6	4.0			
GMV-N45G/A8A-K	CM100N1800	4.5	5.0			
GMV-N50G/A8A-K	CM100N1810	5.0	5.8			
GMV-N56G/A8A-K	CM100N1820	5.6	6.3			
GMV-N63G/A8A-K	CM100N1830	6.3	7.0			

Model	Product Code	Cooling Capacity	Heating Capacity	Power Supply	Refrigerant	Appearance
		kW	kW			
GMV-N71G/A8A-K	CM100N1840	7.1	7.5	208-230V~60Hz		
GMV-N22G/C9A-K	CM100N1850	2.2	2.5			
GMV-N28G/C9A-K	CM100N1860	2.8	3.2			
GMV-N36G/C9A-K	CM100N1870	3.6	4.0			
GMV-N45G/C9A-K	CM100N1880	4.5	5.0			
GMV-N50G/C9A-K	CM100N1890	5.0	5.8			
GMV-N56G/C9A-K	CM100N1900	5.6	6.3			
GMV-N63G/C9A-K	CM100N1910	6.3	7.0			
GMV-N71G/C9A-K	CM100N1920	7.1	7.5			
GMV-N22G/E3A-K	CM100N2170	2.2	2.5	208-230V~60Hz		
GMV-N28G/E3A-K	CM100N2180	2.8	3.2			
GMV-N36G/E3A-K	CM100N2190	3.6	4.0			
GMV-N45G/E3A-K	CM100N2200	4.5	5.0			
GMV-N50G/E3A-K	CM100N2210	5.0	5.8			
GMV-N56G/E3A-K	CM100N2220	5.6	6.3			
GMV-N63G/E3A-K	CM100N2230	6.3	7.0			
GMV-N71G/E3A-K	CM100N2240	7.1	7.5			

Model	Product Code	Cooling Capacity	Heating Capacity	Power Supply	Refrigerant	Appearance
		kW	kW			
GMV-N22G/A3A-D	CM100N1430	2.2	2.5	208-230V~60Hz	R410A	
GMV-N28G/A3A-D	CM100N1400	2.8	3.2			
GMV-N36G/A3A-D	CM100N1440	3.6	4.0			
GMV-N45G/A3A-D	CM100N1450	4.5	5.0			
GMV-N50G/A3A-D	CM100N1410	5.0	5.8			

GMV-N56G/A3A-D	CM100N1460	5.6	6.3			
GMV-N63G/A3A-D	CM100N1470	6.3	7.0			
GMV-N71G/A3A-D	CM100N1420	7.1	7.5			
GMV-N22G/A2A-D	CM100N1930	2.2	2.5	208-230V~60Hz		
GMV-N28G/A2A-D	CM100N1940	2.8	3.2			
GMV-N36G/A2A-D	CM100N1950	3.6	4.0			
GMV-N45G/A2A-D	CM100N1960	4.5	5.0			
GMV-N50G/A2A-D	CM100N1970	5.0	5.8			
GMV-N56G/A2A-D	CM100N1980	5.6	6.3			
GMV-N63G/A2A-D	CM100N1990	6.3	7.0			
GMV-N71G/A2A-D	CM100N2000	7.1	7.5			

Model	Product Code	Cooling Capacity (kW)	Heating Capacity (kW)	Power Supply	Refrigerant	Appearance
GMV-N22G/A4A-D	CM100N1610	2.2	2.5	208-230V~60Hz	R410A	
GMV-N28G/A4A-D	CM100N1620	2.8	3.2			
GMV-N36G/A4A-D	CM100N1630	3.6	4.0			
GMV-N45G/A4A-D	CM100N1640	4.5	5.0			
GMV-N50G/A4A-D	CM100N1650	5.0	5.8			
GMV-N56G/A4A-D	CM100N1660	5.6	6.3			
GMV-N63G/A4A-D	CM100N1670	6.3	7.0			
GMV-N71G/A4A-D	CM100N1680	7.1	7.5			
GMV-N22G/A8A-D	CM100N2010	2.2	2.5	208-230V~60Hz		
GMV-N28G/A8A-D	CM100N2020	2.8	3.2			
GMV-N36G/A8A-D	CM100N2030	3.6	4.0			
GMV-N45G/A8A-D	CM100N2040	4.5	5.0			
GMV-N50G/A8A-D	CM100N2050	5.0	5.8			
GMV-N56G/A8A-D	CM100N2060	5.6	6.3			
GMV-N63G/A8A-D	CM100N2070	6.3	7.0			
GMV-N71G/A8A-D	CM100N2080	7.1	7.5			
GMV-N22G/C9A-D	CM100N2090	2.2	2.5	208-230V~60Hz		
GMV-N28G/C9A-D	CM100N2100	2.8	3.2			
GMV-N36G/C9A-D	CM100N2110	3.6	4.0			
GMV-N45G/C9A-D	CM100N2120	4.5	5.0			
GMV-N50G/C9A-D	CM100N2130	5.0	5.8			
GMV-N56G/C9A-D	CM100N2140	5.6	6.3			
GMV-N63G/C9A-D	CM100N2150	6.3	7.0			
GMV-N71G/C9A-D	CM100N2160	7.1	7.5			
GMV-N22G/E3A-D	CM100N2250	2.2	2.5	208-230V~60Hz		
GMV-N28G/E3A-D	CM100N2260	2.8	3.2			
GMV-N36G/E3A-D	CM100N2270	3.6	4.0			
GMV-N45G/E3A-D	CM100N2280	4.5	5.0			
GMV-N50G/E3A-D	CM100N2290	5.0	5.8			
GMV-N56G/E3A-D	CM100N2300	5.6	6.3			

GMV-N63G/E3A-D	CM100N2310	6.3	7.0			
GMV-N71G/E3A-D	CM100N2320	7.1	7.5			

1.14 Super High Static Pressure Duct Type Indoor Unit

Model	Product Code	Cooling Capacity	Heating Capacity	Power Supply	Refrigerant	Appearance
		kW	kW			
GMV-ND22PHS/B-T	CM810N0300	2.2	2.5	220-240V~50Hz 208-230V~60Hz	R410A	
GMV-ND25PHS/B-T	CM810N0310	2.5	2.8			
GMV-ND28PHS/B-T	CM810N0320	2.8	3.2			
GMV-ND32PHS/B-T	CM810N0330	3.2	3.6			
GMV-ND36PHS/B-T	CM810N0340	3.6	4.0			
GMV-ND40PHS/B-T	CM810N0350	4.0	4.5			
GMV-ND45PHS/B-T	CM810N0360	4.5	5.0			
GMV-ND50PHS/B-T	CM810N0370	5.0	5.6			
GMV-ND56PHS/B-T	CM810N0380	5.6	6.3			
GMV-ND63PHS/B-T	CM810N0390	6.3	7.1			
GMV-ND71PHS/B-T	CM810N0400	7.1	8.0			
GMV-ND80PHS/B-T	CM810N0410	8.0	9.0			
GMV-ND90PHS/B-T	CM810N0420	9.0	10.0			
GMV-ND100PHS/B-T	CM810N0430	10.0	11.2			
GMV-ND112PHS/B-T	CM810N0440	11.2	12.5			
GMV-ND125PHS/B-T	CM810N0450	12.5	14.0			
GMV-ND140PHS/B-T	CM810N0460	14.0	16.0			
GMV-ND160PHS/B-T	CM810N0840	16.0	18.0			

2 Nomenclature

2.1 Nomenclature of indoor units

GMV	-	N	□	□	□	□	□	/	□	-	□
1		2	3	4	5	6	7		8		9

No.	Description	Options
1	Product code	GMV-Gree Multi VRF Units
2	indoor unit code	indoor unit -N
3	Motor type	D – DC motor NULL – AC motor
4	Function code	R – pure heat pump/ all heat exchanger with cooling function L-cooling only unit X-fresh air W- double thermal source Q – heat recovery Null – electric heating defaulted
5	Cooling capacity/air volume code	Indoor unit: norminal cooling capacity /100(W) All heat exchanger: air volume /100（m3/h）
6	Unit type	PL- low static pressure duct type unit; P-standard static pressure duct type unit PH- high static pressure duct type unit; PB-slim type duct type unit T- 4-way cassete unit; TX – cassete unit with small panel (4-way air supply) A-Air handler； TD-one-way cassette unit; TS- two-way cassette unit; ZD- floor ceiling unit; ZK- combine unit C-console unit; G- wall-mounted unit； L- Floor Standing unit
7	With water pump or not	With water pump –S (S is not displayed for the cassette unit with water pump)
8	Design serial No.	Nominate by A,B,C or expand it by 1, 2, 3…
9	Power	D - 220V～,60Hz; 208-230V～,60Hz; 220-240V～,60HZ; 208/230V～,60Hz; M - 380V 3N～, 50Hz;400V 3N～,50Hz; 380-415V 3N～,50Hz; K - 220-240V～,50Hz; 230-240V～,50Hz; T - 208-230V～,60Hz & 220-240V～,50Hz

Note:

① If there's "（X+figure）"at the end of model, it indicates the fresh air handler. X——fresh air; Figure (take one decimal fraction) —— air volume (m^3/h) *10-3. Eg: (X2.0).

② DC inverter fresh air processing indoor, airflow volume ranging from 2000m^3/h to 3500m^3/h are available, there's not "（X+figure）"at the end of model.

3 Specifications

3.1 Floor Standing Type

Model			GMV-ND100L/A-T	GMV-ND140L/A-T
Cooling capacity		kW	10.0	14.0
Heating capacity		kW	11.0	15.0
Circulating air volume		m3/h	1850	1850
Noise		dB(A)	50	50
Power supply			220-240V～50Hz 208-230V～60Hz	220-240V～50Hz 208-230V～60Hz
Rated power input	Cooling	kW	0.2	0.2
	Heating	kW	0.2	0.2
Unit Dimensions (mm)(WxDxH)			1850x580x400	
Package Dimensions (mm)(WxDxH)			2083 x 738x545	
Suitable climite			T1	T1
Connection pipe	Gas	mm	Φ15.9	Φ15.9
	Liquid	mm	Φ9.52	Φ9.52
	Connection Method		Bell mouth connection	Bell mouth connection
Net weight		kg	54	57

Note:

① Units conform to design standard: ISO 15042-2011.

② Specifications may be changed due to product improvement. Please refer to nameplates of the units.

③ Noise data are collected from a semi-anechoic room. Decibels may be slightly higher in actual operation due to environmental change.

④ Above parameters are tested under the condition:high fan speed.

⑤ Cooling : Indoor air temperature 27°C DB/19°C WB;

⑥ Heating : Indoor air temperature 20°C DB/15°C WB.

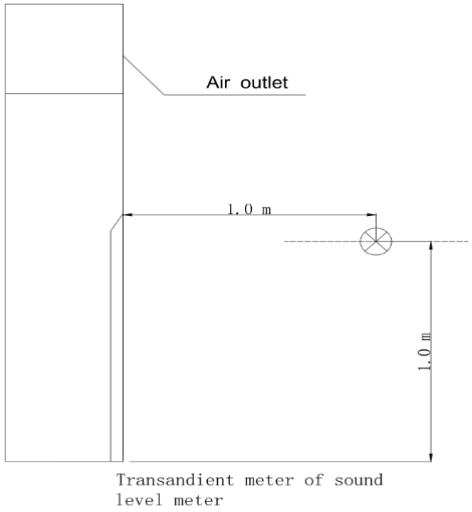

3.2 High Static Pressure Duct Type

Model			GMV-ND56PHS/A-T	GMV-ND63PHS/A-T	GMV-ND71PHS/A-T	GMV-ND80PHS/A-T	GMV-ND90PHS/A-T	GMV-ND100PHS/A-T
Horse Power		HP	2	3	3	3	4	4
Cooling capacity		kW	5.6	6.3	7.1	8.0	9.0	10.0
Heating capacity		kW	6.3	7.1	8.0	9.0	10.0	11.2
Air volume		m^3/h	1000	1000	1100	1100	1700	1700
Static pressure (Pa)		Standard	70	70	70	70	70	70
		Optional	0~100	0~100	0~100	0~100	0~100	0~100
Cooling power input		W	120	120	130	130	200	200
Cooling current input		A	0.6	0.6	0.6	0.6	1.0	1.0
Heating power input		W	120	120	130	130	200	200
Heating current input		A	0.6	0.6	0.6	0.6	1.0	1.0
Minimum line current		A	0.75	0.75	0.75	0.75	1.25	1.25
Maximum fuse current		A	6	6	6	6	6	6
Sound pressure level		dB(A)	44	44	45	45	46	46
Power supply			220-240V 1 phase ~50Hz/208-230V 1 phase ~60Hz					
Connection pipe	Liquid pipe	mm	Φ9.52	Φ9.52	Φ9.52	Φ9.52	Φ9.52	Φ9.52
	Gas pipe	mm	Φ15.9	Φ15.9	Φ15.9	Φ15.9	Φ15.9	Φ15.9
Drain pipe	External diameter × thickness	mm	Φ25×2.5	Φ25×2.5	Φ25×2.5	Φ25×2.5	Φ25×2.5	Φ25×2.5
Unit Dimensions (mm)(WxDxH)		mm	1271×558×268	1271×558×268	1271×558×268	1271×558×268	1229×775×290	1229×775×290
Net weight		kg	35	35	35	35	47	47

Model			GMV-ND112PHS/A-T	GMV-ND125PHS/A-T	GMV-ND140PHS/A-T	GMV-ND160PHS/A-T	GMV-ND224PH/A-T	GMV-ND280PH/A-T
Horse Power		HP	4	5	5	6	8	10
Cooling capacity		kW	11.2	12.5	14.0	16.0	22.4	28.0
Heating capacity		kW	12.5	14.0	16.0	17.0	25.0	31.0
Air volume		m^3/h	1700	2000	2000	2650	4000	4400
Static pressure (Pa)		Standard	70	70	70	70	150	150
		Optional	0~100	0~100	0~100	0~150	50~200	50~200
Cooling power input		W	200	220	220	350	800	900
Cooling current input		A	1.0	1.0	1.0	1.5	4.1	4.6
Heating power input		W	200	220	220	350	800	900
Heating current input		A	1.0	1.0	1.0	1.5	4.1	4.6
Minimum line current		A	1.25	1.25	1.25	1.875	6	6
Maximum fuse current		A	6	6	6	10	10	10
Sound pressure level		dB(A)	46	48	48	50	54	55
Power supply			220-240V 1 phase ~50Hz/208-230V 1 phase ~60Hz					
Piping interface	Liquid pipe	mm	Φ9.52	Φ9.52	Φ9.52	Φ9.52	Φ9.52	Φ9.52
	Gas pipe	mm	Φ15.9	Φ15.9	Φ15.9	Φ19.05	Φ19.05	Φ22.2
Drain pipe	External diameter × thickness	mm	Φ25×2.5	Φ25×2.5	Φ25×2.5	Φ20×1.2	Φ30×1.5	Φ30×1.5
Unit Dimensions W×D×H		mm	1229×775×290	1229×775×290	1229×775×290	1340×750×350	1483×791×385	1686×870×450
Net weight		kg	47	47	47	60	82	105

Notes:

① Rated cooling capacity test conditions: indoor 27°C DB/19°C WB, outdoor 35°C DB; connection pipe length: 5 m, without height drop between units.

② Rated heating capacity test conditions: indoor 20°C DB, outdoor 7°C DB/6 °C WB; connection pipe length: 5 m, without height drop between units.

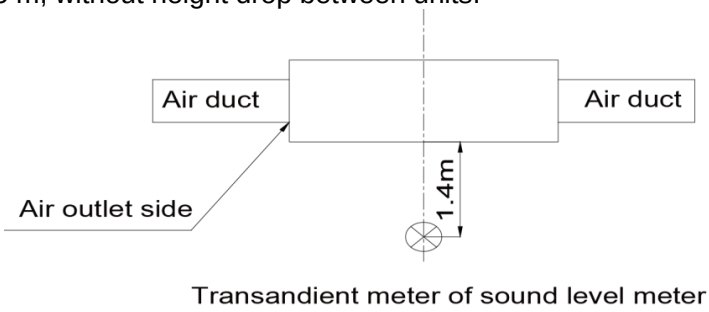

3.3 Low Static Pressure Duct Type

Model			GMV-ND22PLS/A-T	GMV-ND25PLS/A-T	GMV-ND28PLS/A-T	GMV-ND32PLS/A-T	GMV-ND36PLS/A-T	GMV-ND40PLS/A-T	GMV-ND45PLS/A-T	GMV-ND50PLS/A-T	GMV-ND56PLS/A-T
Horse Power		HP	1	1	1	1.5	1.5	1.5	2	2	2
Cooling capacity		kW	2.2	2.5	2.8	3.2	3.6	4.0	4.5	5.0	5.6
Heating capacity		kW	2.5	2.8	3.2	3.6	4.0	4.5	5.0	5.6	6.3
Air Volume		m^3/h	450	450	450	550	550	700	700	700	1000
ESP		Pa	15/0~30	15/0~30	15/0~30	15/0~30	15/0~30	15/0~30	15/0~30	15/0~30	15/0~30
Cooling power input		W	35	35	35	43	43	52	52	52	99
Cooling current input		A	0.2	0.2	0.2	0.2	0.2	0.3	0.3	0.3	0.5
Heating power input		W	35	35	35	43	43	52	52	52	99
Heating current input		A	0.2	0.2	0.2	0.2	0.2	0.3	0.3	0.3	0.5
*Minimum line current		A	0.25	0.25	0.25	0.25	0.25	0.38	0.38	0.38	0.63
*Maximum fuse current		A	6	6	6	6	6	6	6	6	6
Sound pressure level		dB(A)	31	31	31	32	32	33	33	33	35
Power supply**			220-240V 1 phase ~50Hz/208-230V 1 phase ~60Hz								
Pipe diameter	Liquid pipe	mm	Φ6.35	Φ6.35	Φ6.35	Φ6.35	Φ6.35	Φ6.35	Φ6.35	Φ6.35	Φ9.52
	Gas pipe	mm	Φ9.52	Φ9.52	Φ9.52	Φ12.7	Φ12.7	Φ12.7	Φ12.7	Φ12.7	Φ15.9
Drain pipe	External diameter × thickness	mm	Φ25×2.5	Φ25×2.5	Φ25×2.5	Φ25×2.5	Φ25×2.5	Φ25×2.5	Φ25×2.5	Φ25×2.5	Φ25×2.5
Dimensions	W×D×H	mm	700×615×200	700×615×200	700×615×200	700×615×200	700×615×200	900×615×200	900×615×200	900×615×200	1100×615×200
Net weight		kg	22	22	22	22	22	27	27	27	31

Model			GMV-ND63PLS/A-T	GMV-ND71PLS/A-T	GMV-ND80PLS/A-T	GMV-ND90PLS/A-T	GMV-ND100PLS/A-T	GMV-ND112PLS/A-T	GMV-ND125PLS/A-T	GMV-ND140PLS/A-T
Horse Power		HP	3	3	3	4	4	4	5	5
Cooling capacity		kW	6.3	7.1	8.0	9.0	10.0	11.2	12.5	14.0
Heating capacity		kW	7.1	8.0	9.0	10.0	11.2	12.5	14.0	16.0
Air volume		m^3/h	1000	1000	1100	1500	1500	1700	2000	2000
Unit external static pressure		Pa	15/0~30	30/0~50	30/0~50	30/0~50	30/0~50	30/0~50	30/0~50	30/0~50
Cooling power input		W	99	105	140	209	209	209	230	230
Cooling current input		A	0.5	0.5	0.7	1.0	1.0	1.0	1.1	1.1
Heating power input		W	99	105	140	209	209	209	230	230
Heating current input		A	0.5	0.5	0.7	1.0	1.0	1.0	1.1	1.1
*Minimum line current		A	0.63	0.63	0.88	1.25	1.25	1.25	1.38	1.38
*Maximum fuse current		A	6	6	6	6	6	6	6	6
Sound pressure level		dB(A)	35	35	36	40	40	40	42	42
Power supply			220-240V 1 phase ~50Hz/208-230V 1 phase ~60Hz							
Pipe diameter	Liquid pipe	mm	Φ9.52	Φ9.52	Φ9.52	Φ9.52	Φ9.52	Φ9.52	Φ9.52	Φ9.52
	Gas pipe	mm	Φ15.9	Φ15.9	Φ15.9	Φ15.9	Φ15.9	Φ15.9	Φ15.9	Φ15.9
Drain pipe	External diameter × thickness	mm	Φ25×2.5	Φ25×2.5	Φ25×2.5	Φ25×2.5	Φ25×2.5	Φ25×2.5	Φ25×2.5	Φ25×2.5
Dimensions	W×D×H	mm	1100×615×200	1200×655×260	1200×655×260	1340×655×260	1340×655×260	1340×655×260	1340×655×260	1340×655×260
Net weight		kg	31	40	40	46	46	46	47	47

Notes:

① Rated cooling capacity test conditions: indoor 27°C DB/19°C WB, outdoor 35°C DB; connection pipe length: 5 m, without height drop between units.

② Rated heating capacity test conditions: indoor 20°C DB, outdoor 7°C DB/6 °C WB; connection pipe length: 5 m, without height drop between units.

③ In the column of “Unit external static pressure”: The figure before “/” indicates the default external static pressure of unit before delivery, and the figures after indicate the adjustable static pressure range of unit.

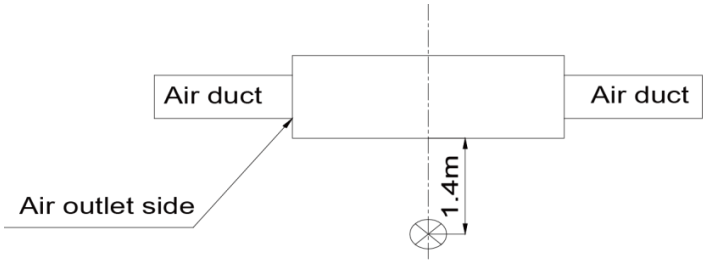

Transandient meter of sound level meter

3.4 4-way Cassette Type

Model			GMV-ND28T/A-T	GMV-ND36T/A-T	GMV-ND45T/A-T	GMV-ND50T/A-T	GMV-ND56T/A-T	GMV-ND63T/A-T	GMV-ND71T/A-T
Horse Power		HP	1	1.5	2	2	2	3	3
Cooling capacity		kW	2.8	3.6	4.5	5.0	5.6	6.3	7.1
Heating capacity		kW	3.2	4.0	5.0	5.6	6.3	7.1	8.0
Air volume		m^3/h	750	750	750	830	1000	1000	1180
Cooling power input		W	48	48	48	50	59	59	68
Cooling current input		A	0.2	0.2	0.2	0.2	0.3	0.3	0.3
Heating power input		W	48	48	48	50	59	59	68
Heating current input		A	0.2	0.2	0.2	0.2	0.3	0.3	0.3
*Minimum line current		A	0.25	0.25	0.25	0.25	0.38	0.38	0.38
*Maximum fuse current		A	6	6	6	6	6	6	6
Sound pressure level		dB(A)	36	36	36	36	37	37	38
Power supply**			220-240V 1 phase ~50Hz/208-230V 1 phase ~60Hz						
Piping interface	Liquid pipe	mm	Φ6.35	Φ6.35	Φ6.35	Φ6.35	Φ9.52	Φ9.52	Φ9.52
	Gas pipe	mm	Φ9.52	Φ12.7	Φ12.7	Φ12.7	Φ15.9	Φ15.9	Φ15.9
Drain pipe	External diameter × thickness	mm	Φ25×2.5	Φ25×2.5	Φ25×2.5	Φ25×2.5	Φ25×2.5	Φ25×2.5	Φ25×2.5
Main body dimensions	W×D×H	mm	840×840×190	840×840×190	840×840×190	840×840×190	840×840×240	840×840×240	840×840×240
Panel dimensions	W×D×H	mm	950×950×65	950×950×65	950×950×65	950×950×65	950×950×65	950×950×65	950×950×65
Net weight	Main body	kg	22.5	22.5	22.5	22.5	26.5	26.5	26.5
	Panel	kg	7	7	7	7	7	7	7

Model			GMV-ND80T/A-T	GMV-ND90T/A-T	GMV-ND100T/A-T	GMV-ND112T/A-T	GMV-ND125T/A-T	GMV-ND140T/A-T	GMV-ND160T/A-T
Horse Power		HP	3	4	4	4	5	5	5
Cooling capacity		kW	8.0	9.0	10.0	11.2	12.5	14.0	16.0
Heating capacity		kW	9.0	10.0	11.2	12.5	14.0	16.0	17.5
Air volume		m^3/h	1180	1500	1500	1700	1860	1860	2100
Cooling power input		W	68	98	98	110	110	110	120
Cooling current input		A	0.3	0.4	0.4	0.5	0.5	0.5	0.6
Heating power input		W	68	98	98	110	110	110	120
Heating current input		A	0.3	0.4	0.4	0.5	0.5	0.5	0.6
*Minimum line current		A	0.38	0.5	0.5	0.63	0.63	0.63	0.75
*Maximum fuse current		A	6	6	6	6	6	6	6
Sound pressure level		dB(A)	38	40	40	41	43	43	47
Power supply**			220-240V 1 phase ~50Hz/208-230V 1 phase ~60Hz						
Piping interface	Liquid pipe	mm	Φ9.52	Φ9.52	Φ9.52	Φ9.52	Φ9.52	Φ9.52	Φ9.52
	Gas pipe	mm	Φ15.9	Φ15.9	Φ15.9	Φ15.9	Φ15.9	Φ15.9	Φ15.9
Drain pipe	External diameter × thickness	mm	Φ25×2.5	Φ25×2.5	Φ25×2.5	Φ25×2.5	Φ25×2.5	Φ25×2.5	Φ25×2.5
Main body dimensions	W×D×H	mm	840×840×240	840×840×320	840×840×320	840×840×320	840×840×320	840×840×320	910×910×293

Panel dimensions	W×D×H	mm	950×950×65	950×950×65	950×950×65	950×950×65	950×950×65	950×950×65	1040×1040×65
Net weight	Main body	kg	26.5	32.5	32.5	32.5	32.5	32.5	46.5
	Panel	kg	7	7	7	7	7	7	7.5

Notes:

① Rated cooling capacity test conditions: indoor 27°C DB/19°C WB, outdoor 35°C DB; connection pipe length: 5 m, without height drop between units.

② Rated heating capacity test conditions: indoor 20°C DB, outdoor 7°C DB/6 °C WB; connection pipe length: 5 m, without height drop between units.

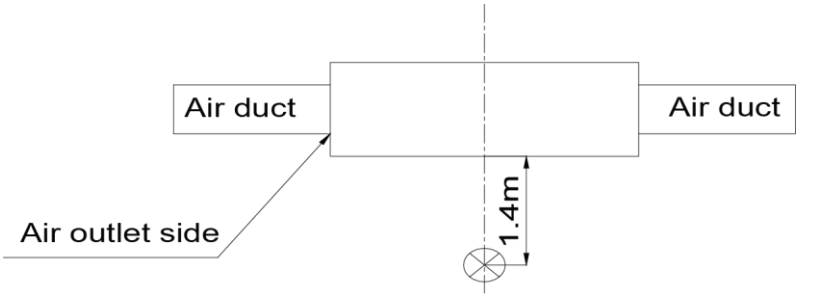

Transandient meter of sound level meter

3.5 Compact 4-way Cassette Type

Model			GMV-ND22T/B-T	GMV-ND28T/B-T	GMV-ND36T/B-T	GMV-ND45T/B-T	GMV-ND50T/B-T	GMV-ND56T/B-T
Horse Power		HP	1	1	1.5	2	2	2
Cooling capacity		kW	2.2	2.8	3.6	4.5	5.0	5.6
Heating capacity		kW	2.5	3.2	4.0	5.0	5.6	6.3
Air volume		m^3/h	600	600	600	700	700	700
Cooling power input		W	35	35	35	45	45	45
Cooling current input		A	0.4	0.4	0.4	0.5	0.5	0.5
Heating power input		W	35	35	35	45	45	45
Heating current input		A	0.4	0.4	0.4	0.5	0.5	0.5
*Minimum line current		A	0.5	0.5	0.5	0.63	0.63	0.63
*Maximum fuse current		A	6	6	6	6	6	6
Sound pressure level		dB(A)	41	41	41	45	45	45
Power supply**			220-240V 1 phase ~50Hz/208-230V 1 phase ~60Hz					
Piping interface	Liquid pipe	mm	Φ6.35	Φ6.35	Φ6.35	Φ6.35	Φ9.52	Φ9.52
	Gas pipe	mm	Φ9.52	Φ9.52	Φ12.7	Φ12.7	Φ12.7	Φ15.9
Drain pipe	External diameter × Thickness	mm	Φ25×2.5	Φ25×2.5	Φ25×2.5	Φ25×2.5	Φ25×2.5	Φ25×2.5
Main body dimensions	W×D×H	mm	596×596×240	596×596×240	596×596×240	596×596×240	596×596×240	596×596×240

Panel dimensions	W×D×H	mm	670×670×50	670×670×50	670×670×50	670×670×50	670×670×50	670×670×50
Net weight	Main body	kg	20.5	20.5	20.5	20.5	20.5	20.5
	Panel	kg	3.5	3.5	3.5	3.5	3.5	3.5

Notes:

① Rated cooling capacity test conditions: indoor 27°C DB/19°C WB, outdoor 35°C DB; connection pipe length: 5 m, without height drop between units.

② Rated heating capacity test conditions: indoor 20°C DB, outdoor 7°C DB/6 °C WB; connection pipe length: 5 m, without height drop between units.

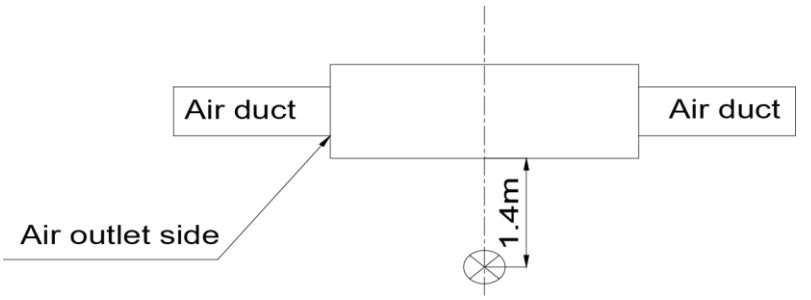

Transandient meter of sound level meter

3.6 2-way Cassette Type

Model			GMV-ND28TS/A-T	GMV-ND36TS/A-T	GMV-ND45TS/A-T	GMV-ND50TS/A-T	GMV-ND56TS/A-T	GMV-ND63TS/A-T	GMV-ND71TS/A-T
Horse Power		HP	1	1.5	2	2	2	2	2.5
Cooling capacity		kW	2.8	3.6	4.5	5.0	5.6	6.3	7.1
Heating capacity		kW	3.2	4.0	5.0	5.6	6.3	7.1	8.0
Air volume		m^3/h	830	830	830	830	1100	1100	1100
Cooling power input		W	55	55	55	55	103	103	103
Cooling current input		A	0.4	0.4	0.4	0.4	0.7	0.7	0.7
Heating power input		W	55	55	55	55	103	103	103
Heating current input		A	0.4	0.4	0.4	0.4	0.7	0.7	0.7
*Minimum line current		A	0.5	0.5	0.5	0.5	0.9	0.9	0.9
*Maximum fuse current		A	6	6	6	6	6	6	6
Sound pressure level		dB(A)	35	35	35	35	39	39	39
Power supply**			220-240V 1 phase ~50Hz/208-230V 1 phase ~60Hz						
Piping interface	Liquid pipe	mm	Φ6.35	Φ6.35	Φ6.35	Φ6.35	Φ9.52	Φ9.52	Φ9.52
	Gas pipe	mm	Φ9.52	Φ12.7	Φ12.7	Φ12.7	Φ15.9	Φ15.9	Φ15.9
Drain pipe	External diameter × Thickness	mm	Φ25×2.5	Φ25×2.5	Φ25×2.5	Φ25×2.5	Φ25×2.5	Φ25×2.5	Φ25×2.5
Main body dimensions	W×D×H	mm	1200×520×340	1200×520×340	1200×520×340	1200×520×340	1200×520×340	1200×520×340	1200×520×340
Panel dimensions	W×D×H	mm	1443×630×33	1443×630×33	1443×630×33	1443×630×33	1443×630×33	1443×630×33	1443×630×33
Net weight	Main body	kg	43.0	43.0	43.0	43.0	46.0	46.0	46.0
	Panel	kg	54.0	54.0	54.0	54.0	56.0	56.0	56.0

Notes:

① Rated cooling capacity test conditions: indoor 27°C DB/19°C WB, outdoor 35°C DB; connection pipe length: 5 m, without height drop between units.

② Rated heating capacity test conditions: indoor 20°C DB, outdoor 7°C DB/6 °C WB; connection pipe length: 5 m, without height drop between units.

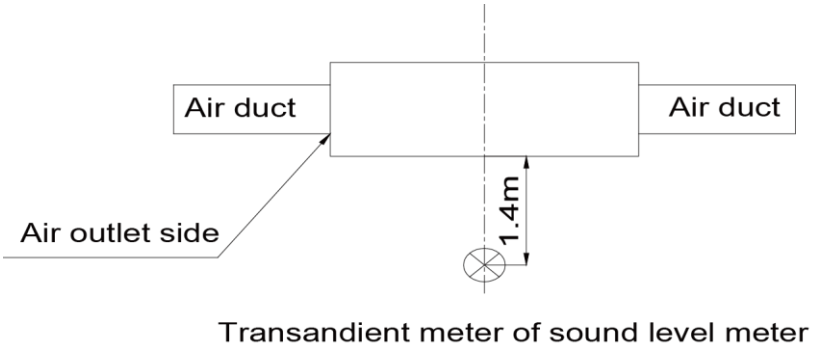

3.7 1-way Cassette Type

Model			GMV-ND22TD/A-T	GMV-ND28TD/A-T	GMV-ND36TD/A-T	GMV-ND45TD/A-T	GMV-ND50TD/A-T
Horse Power		HP	1	1	1.5	2	2
Cooling capacity		kW	2.2	2.8	3.6	4.5	5.0
Heating capacity		kW	2.5	3.2	4.0	5.0	5.6
Air volume		m^3/h	600	600	600	830	830
Cooling power input		W	30	30	30	45	45
Cooling current input		A	0.2	0.2	0.2	0.3	0.3
Heating power input		W	30	30	30	45	45
Heating current input		A	0.2	0.2	0.2	0.3	0.3
*Minimum line current		A	0.25	0.25	0.25	0.38	0.38
*Maximum fuse current		A	6	6	6	6	6
Sound pressure level		dB(A)	36	36	36	40	40
Power supply			220-240V 1 phase ~50Hz/208-230V 1 phase ~60Hz				
Piping interface	Liquid pipe	mm	Φ6.35	Φ6.35	Φ6.35	Φ6.35	Φ6.35
	Gas pipe	mm	Φ9.52	Φ9.52	Φ12.7	Φ12.7	Φ12.7
Drain pipe	External diameter × thickness	mm	Φ25×2.5	Φ25×2.5	Φ25×2.5	Φ25×2.5	Φ25×2.5
Main body dimensions	W×D×H	mm	987×385×178	987×385×178	987×385×178	987×385×178	987×385×178
Panel dimensions	W×D×H	mm	1200×460×55	1200×460×55	1200×460×55	1200×460×55	1200×460×55
Net weight	Main body	kg	20	20	20	21	21
	Panel	kg	4.2	4.2	4.2	4.2	4.2

Notes:

① Rated cooling capacity test conditions: indoor 27°C DB/19°C WB, outdoor 35°C DB; connection pipe length: 5 m, without height drop between units.

② Rated heating capacity test conditions: indoor 20°C DB, outdoor 7°C DB/6 °C WB; connection pipe length: 5 m, without height drop between units.

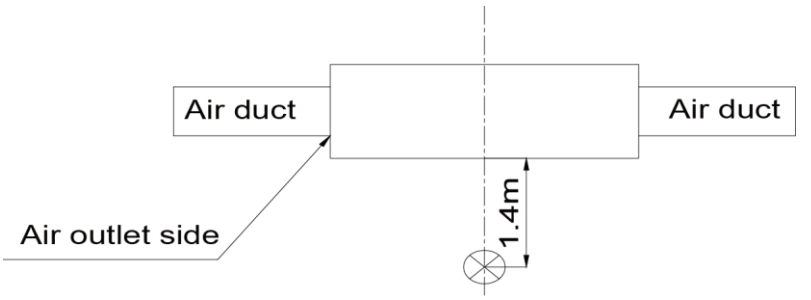

Transandient meter of sound level meter

3.8 Floor Ceiling Type

Model			GMV-ND28ZD/A-T	GMV-ND36ZD/A-T	GMV-ND50ZD/A-T	GMV-ND63ZD/A-T	GMV-ND71ZD/A-T
Horse Power		HP	1	1.5	2	3	3
Cooling capacity		kW	2.8	3.6	5.0	6.3	7.1
Heating capacity		kW	3.2	4.0	5.6	7.1	8.0
Air volume		m^3/h	650	650	950	1400	1400
Cooling power input		W	40	40	50	75	75
Cooling current input		A	0.2	0.2	0.25	0.38	0.38
Heating power input		W	40	40	50	75	75
Heating current input		A	0.2	0.2	0.25	0.38	0.38
*Minimum line current		A	0.25	0.25	0.3	0.48	0.48
*Maximum fuse current		A	6	6	6	6	6
Sound pressure level		dB(A)	36	36	42	44	44
Power supply			220-240V 1 phase ~50Hz/208-230V 1 phase ~60Hz				
Piping interface	Liquid pipe	mm	Φ6.35	Φ6.35	Φ6.35	Φ9.52	Φ9.52
	Gas pipe	mm	Φ9.52	Φ12.7	Φ12.7	Φ15.9	Φ15.9
Drain pipe	External diameter × thickness	mm	Φ17×1.75	Φ17×1.75	Φ17×1.75	Φ17×1.75	Φ17×1.75
Dimensions	W×D×H	mm	1220×700×225	1220×700×225	1220×700×225	1420×700×245	1420×700×245
Net weight		kg	40	40	40	50	50

Model			GMV-ND90ZD/A-T	GMV-ND112ZD/A-T	GMV-ND125ZD/A-T	GMV-ND140ZD/A-T
Horse Power		HP	4	4	5	5
Cooling capacity		kW	9.0	11.2	12.5	14.0
Heating capacity		kW	10.0	12.5	14.0	16.0
Air volume		m^3/h	1600	2000	2000	2000
Cooling power input		W	140	160	160	160
Cooling current input		A	0.7	0.95	0.95	0.95
Heating power input		W	140	160	160	160
Heating current input		A	0.7	0.95	0.95	0.95
*Minimum line current		A	0.88	1.2	1.2	1.2
*Maximum fuse current		A	6	6	6	6
Sound pressure level		dB(A)	50	52	52	52
Power supply			220-240V 1 phase ~50Hz/208-230V 1 phase ~60Hz			
Piping interface	Liquid pipe	mm	Φ9.52	Φ9.52	Φ9.52	Φ9.52
	Gas pipe	mm	Φ15.9	Φ15.9	Φ15.9	Φ15.9

Drain pipe	External diameter × thickness	mm	Φ17×1.75	Φ17×1.75	Φ17×1.75	Φ17×1.75
Dimensions	W×D×H	mm	1420×700×245	1700×700×245	1700×700×245	1700×700×245
Net weight		kg	50	60	60	60

Notes:

①. Rated Cooling capacity test conditions: indoor 27°C DB/19°C WB, outdoor 35°C DB; connection pipe length: 5 m, without height drop between units.

②. Rated heating capacity test conditions: indoor 20°C DB, outdoor 7°C DB/6 °C WB; connection pipe length: 5 m, without height drop between units.

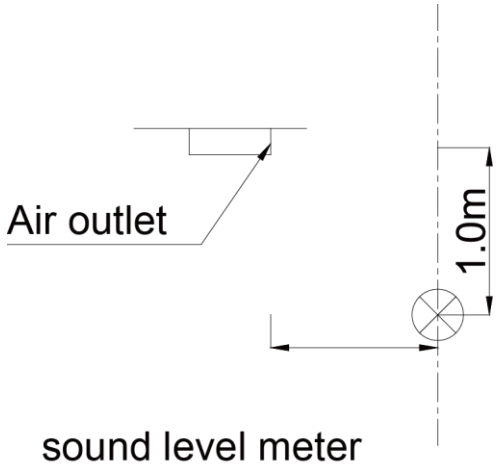

3.9 Fresh air Processing Unit

AC Inverter Fresh Air Processing Indoor

Model			GMV-NX140P/A(X1.2)-K	GMV-NX224P/A(X2.0) -M	GMV-NX280P/A(X2.5) -M	GMV-NX280P/A(X3.0) -M	GMV-NX450P/A(X4.0) -M
Horse Power		HP	5	8	10	10	16
Cooling capacity		kW	14	22.4	28	28	45
Heating capacity		kW	10	16	20	20	32
Air volume		m^3/h	1200	2000	2500	3000	4000
Cooling power input		W	360	740	760	1060	1240
Static pressure (Pa)		Standard	150	200	200	200	200
		Optional	200	300	300	300	300
Cooling current input		A	1.65	2.10	2.40	2.47	3.40
Heating power input		W	360	740	760	1060	1240
Heating current input		A	1.65	2.10	2.40	2.47	3.40
Minimum line current		A	2.1	2.6	3.0	3.1	4.3
Maximum fuse current		A	3.7	4.7	5.4	5.5	7.6
Sound pressure level		dB(A)	42	47	48	51	58
Power supply			220~240V 1phase~50Hz	380~415V 3N~50Hz	380~415V 3N~50Hz	380~415V 3N~50Hz	380~415V 3N~50Hz
Piping interface	Liquid pipe	mm	Φ9.52	Φ9.52	Φ9.52	Φ9.52	Φ12.7
	Gas pipe	mm	Φ15.9	Φ19.05	Φ22.2	Φ22.2	Φ28.6
Drain pipe	External diameter × thickness	mm	Φ25×2.5	Φ25×2.5	Φ25×2.5	Φ25×2.5	Φ25×2.5
Dimensions	W×D×H	mm	1463×756×300	1500×1000×500	1500×1000×500	1500×1000×500	1700×1100×650

Net weight	kg	63.5	130	134	134	208

Notes:

①. a.Rated cooling capacity test conditions: fresh air inlet 35°C DB/28°C WB; connection pipe length: 5 m, without height drop between units; The default air outlet temperature of the unit is 18°C.

②. b.Rated heating capacity test conditions: fresh air inlet 7°C DB/6°C WB; connection pipe length: 5 m, without height drop between units; The default air outlet temperature of the unit is 22°C.

DC Inverter Fresh Air Processing Indoor

Model			GMV-NDX224P/A-T	GMV-NDX280P/A-T
Horse Power		HP	8	10
Cooling capacity		kW	22.4	28.0
Heating capacity		kW*1	16.0	20.0
		kW*2	20.0	22.0
Air volume		m^3/h	2000/2000~3500	2500/2000~3500
Static pressure (Pa)		Standard	200	200
		Optional	50~270	50~280
Rated power input		W	760	860
Rated current input		A	4.3	4.9
Cooling power input		W	400	520
Cooling current input		A	2.5	3.1
Heating power input		W	400	520
Heating current input		A	2.5	3.1
Minimum line current		A	6	6
Maximum fuse current		A	10	10
Sound pressure level		dB(A)	50	51
Power supply			220-240V 1 phase ~50Hz 208-230V 1 phase ~60Hz	
Piping diameter	Liquid pie	mm	Φ9.52	Φ9.52
	Gas pipe	mm	Φ19.05	Φ22.2
Drain pipe	Outer diameter × Wall thickness	mm	Φ30×1.5	Φ30×1.5
Dimensions	W×D×H	mm	1483×791×385	1483×791×385
Net weight		kg	82	82

Note：

①. Rated cooling capacity test conditions: indoor 35°C DB/28°C WB, outdoor 35°C DB; connection pipe length: 7.5m, without height drop between units. The default air outlet temperature of the unit is 18°C.

②. Rated heating capacity test conditions: *1:indoor 7°C DB, outdoor 7°C DB/6 °C WB,*2: indoor -7°C DB, outdoor -7°C DB/RH80%; connection pipe length: 7.5m, without height drop between units. The default air outlet temperature of the unit is 22°C.

③. In the column of “Air Volume”: The figure before “/” indicates the default air Volume of unit before delivery, and the figures after indicate the adjustable air Volume range of unit.

④. The noise value marked in the nameplate is tested under rated condition, which is defaulted as speed 08 under static pressure of 200Pa. The noise in the highest speed may increase by about

3 dB(A) on this value. The noise in the lowest speed may decrease by about 5 dB(A) on this value. The recorded noise value of the sample unit is tested in semi-anechoic room. Under actual installation, the noise value is usually higher than the recorded value of the sample due to the influence of ambient noise and reflected sound.

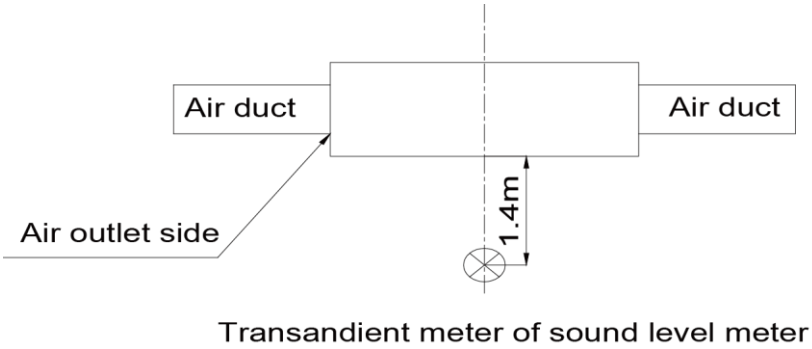

3.10 Slim Duct Type

Model			GMV-ND 22PL/B-T	GMV-ND 25PL/B-T	GMV-ND28PL/ B-T	GMV-ND32PL/ B-T	GMV-ND36PL/ B-T	GMV-ND 40PL/B-T
Horse Power		HP	1	1	1	1.5	1.5	1.5
Cooling capacity		kW	2.2	2.5	2.8	3.2	3.6	4.0
Heating capacity		kW	2.5	2.8	3.2	3.6	4.0	4.5
Air volume		m^3/h	450	450	450	550	550	750
Unit external static pressure		Pa	0/0~15	0/0~15	0/0~15	0/0~15	0/0~15	0/0~15
Cooling power input		W	25	25	25	30	30	35
Cooling current input		A	0.2	0.2	0.2	0.3	0.3	0.3
Heating power input		W	25	25	25	30	30	35
Heating current input		A	0.2	0.2	0.2	0.3	0.3	0.3
*Minimum line current		A	0.25	0.25	0.25	0.38	0.38	0.38
*Maximum fuse current		A	6	6	6	6	6	6
Sound pressure level		dB(A)	30	30	30	31	31	33
Power supply			220-240V 1 phase ~50Hz/208-230V 1 phase ~60Hz					
Piping interface	Liquid pipe	mm	Φ6.35	Φ6.35	Φ6.35	Φ6.35	Φ6.35	Φ6.35
	Gas pipe	mm	Φ9.52	Φ9.52	Φ9.52	Φ12.7	Φ12.7	Φ12.7
Drain pipe	External diameter × thickness	mm	Φ25×2.5	Φ25×2.5	Φ25×2.5	Φ25×2.5	Φ25×2.5	Φ25×2.5
Dimensions	W×D×H	mm	710×450×200	710×450×200	710×450×200	710×450×200	710×450×200	1010×450×200
Net weight	Main body	kg	18.5	18.5	18.5	19.5	19.5	23.5

Model		GMV-ND45PL/ B-T	GMV-ND50PL/ B-T	GMV-ND56PL/ B-T	GMV-ND63PL/ B-T	GMV-ND72PL/ B-T
Horse Power	HP	2	2	2	3	3
Cooling capacity	kW	4.5	5.0	5.6	6.3	7.2
Heating capacity	kW	5.0	5.6	6.3	7.1	8.0
Unit external static pressure	Pa	0/0~15	0/0~15	0/0~15	0/0~15	0/0~15
Air volume	m^3/h	750	750	850	850	1100
Cooling power input	W	35	35	45	45	50
Cooling current input	A	0.3	0.3	0.3	0.3	0.5
Heating power input	W	35	35	45	45	50

Heating current input		A	0.3	0.3	0.3	0.3	0.5
*Minimum line current		A	0.38	0.38	0.38	0.38	0.63
*Maximum fuse current		A	6	6	6	6	6
Sound pressure level		dB(A)	33	33	35	35	37
Power supply			220-240V 1 phase ~50Hz/208-230V 1 phase ~60Hz				
Piping interface	Liquid pipe	mm	Φ6.35	Φ6.35	Φ9.52	Φ9.52	Φ9.52
	Gas pipe	mm	Φ12.7	Φ12.7	Φ15.9	Φ15.9	Φ15.9
Drain pipe	External diameter × thickness	mm	Φ25×2.5	Φ25×2.5	Φ25×2.5	Φ25×2.5	Φ25×2.5
Dimensions	W×D×H	mm	1010×450×200	1010×450×200	1010×450×200	1010×450×200	1310×450×200
Net weight	Main body	kg	23.5	23.5	24.5	24.5	30.5

Notes:

①. a.Rated cooling capacity test conditions: indoor 27°C DB/19°C WB, outdoor 35°C DB; connection pipe length: 5 m, without height drop between units

②. b.Rated heating capacity test conditions: indoor 20°C DB, outdoor 7°C DB/6 °C WB; connection pipe length: 5 m, without height drop between units

③. c.In the column of “Unit external static pressure”: The figure before “/” indicates the default external static pressure of unit before delivery, and the figures after indicate the adjustable static pressure range of unit.

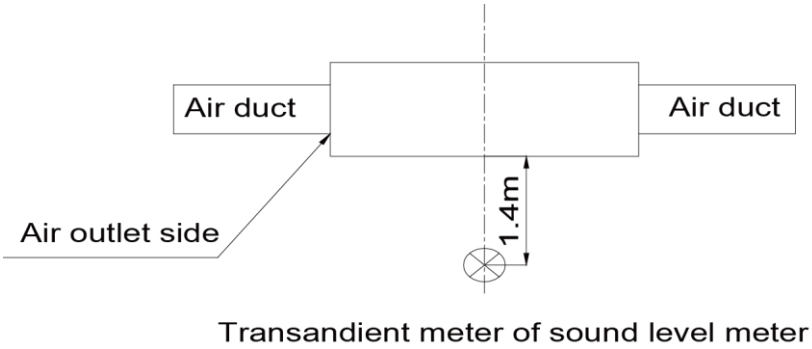

3.11 Air Handler type Indoor Unit

Model		GMV-NR71A/A-D	GMV-NR90A/A-D	GMV-NR100A/A-D	GMV-NR112A/A-D	GMV-NR140A/A-D
Horse Power	HP	2.5	3.0	3.5	4.0	5.0
Cooling capacity	kW	7.1	9.0	10.0	11.2	14.0
Heating capacity	kW	8.0	10.0	11.0	12.5	15.0
Air volume	m^3/h	1600	1700	1900	2250	2400
Cooling power input	W	215	270	370	430	550
Cooling current input	A	1.10	1.35	2.00	2.00	2.50
Heating power input	W	215	270	370	430	550
Heating current input	A	0.4	0.4	0.4	0.5	0.5
*Minimum line current	A	1.10	1.35	2.00	2.00	2.50

*Maximum fuse current		A	6	6	6	6	6
Sound pressure level		dB(A)	50	51	52	52	55
Power supply*			208-230V 1 phase ~60Hz				
Piping interface	Liquid pipe	mm	Φ9.52	Φ9.52	Φ9.52	Φ9.52	Φ9.52
	Gas pipe	mm	Φ15.9	Φ15.9	Φ15.9	Φ15.9	Φ15.9
Drain pipe	External diameter × Thickness	mm	Φ19×2.5	Φ19×2.5	Φ19×2.5	Φ19×2.5	Φ19×2.5
Main body dimensions	W×D×H	mm	460×540 ×1105	460×540 ×1105	540×540 ×1224	540×540 ×1224	630×540 ×1224
Panel dimensions	W×D×H	mm	517×620×1170	517×620×1170	597×620×1289	597×620×1289	687×621×1295
Net weight	Main body	kg	54	57	57	68	78

Notes:

①. a.Rated cooling capacity test conditions: indoor 27°C DB/19°C WB, outdoor 35°C DB; connection pipe length: 5 m, without height drop between units.

②. b.Rated heating capacity test conditions: indoor 20°C DB, outdoor 7°C DB/6 °C WB; connection pipe length: 5 m, without height drop between units.

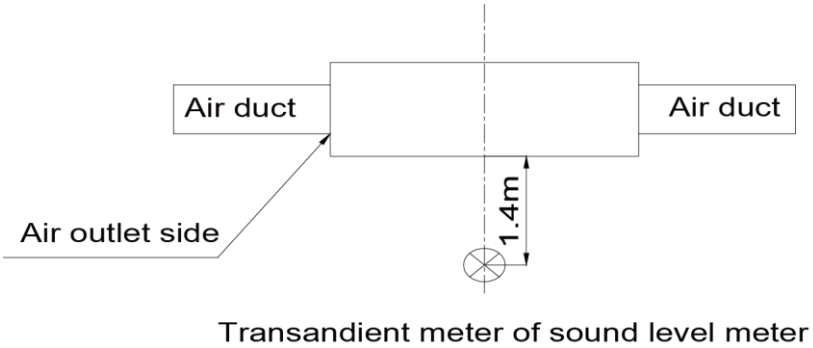

3.12 Console Type Indoor Unit

Model			GMV-ND22C/A-T	GMV-ND28C/A-T	GMV-ND36C/A-T	GMV-ND45C/A-T	GMV-ND50C/A-T
Horse Power		HP	1	1	1.5	2	2
Cooling capacity		kW	2.2	2.8	3.6	4.5	5.0
Heating capacity		kW	2.5	3.2	4.0	5.0	5.5
Air volume		m^3/h	450	500	600	630	650
Cooling power input		W	15	15	20	40	40
Cooling current input		A	0.17	0.17	0.25	0.25	0.4
Heating power input		W	15	15	20	40	40
Heating current input		A	0.17	0.17	0.25	0.25	0.4
*Minimum line current		A	0.16	0.16	0.16	0.16	0.16
*Maximum fuse current		A	6	6	6	6	6
Sound pressure level		dB(A)	36	38	40	43	46
Power supply			220-240V 1 phase ~50Hz/208-230V 1 phase ~60Hz				
Piping interface	Liquid pipe	mm	6.35	6.35	6.35	6.35	6.35
	Gas pipe	mm	9.52	9.52	12.7	12.7	12.7

Drain pipe	External diameter × thickness	mm	Φ17.2×1.0	Φ17.2×1.0	Φ17.2×1.0	Φ17.2×1.0	Φ17.2×1.0
Dimensions	W×D×H	mm	700×215×600	700×215×600	700×215×600	700×215×600	700×215×600
Net weight		kg	16	16	16	16	16

Notes:

①. a.Rated Cooling capacity test conditions: indoor 27°C DB/19°C WB, outdoor 35°C DB; connection pipe length: 5 m, without height drop between units

②. b.Rated heating capacity test conditions: indoor 20°C DB, outdoor 7°C DB/6 °C WB; connection pipe length: 5 m, without height drop between units

Floor type

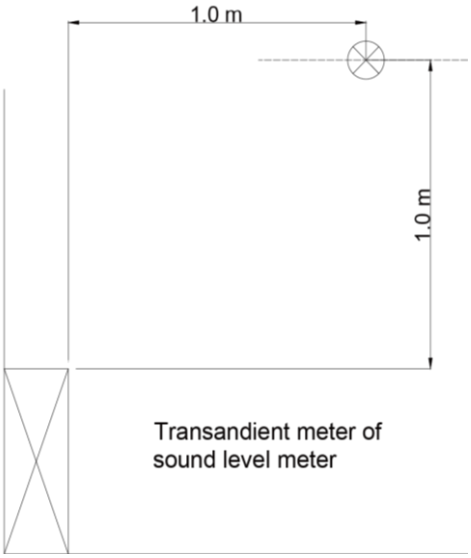

Wall Mounted type

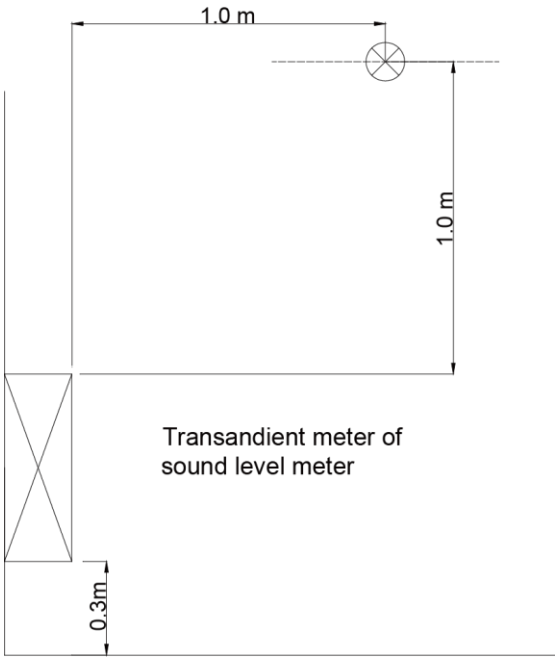

3.13 Wall Mounted type Indoor Unit

Model			GMV-N22G/A3A-K	GMV-N28G/A3A-K	GMV-N36G/A3A-K	GMV-N45G/A3A-K	GMV-N50G/A3A-K
Horse Power		HP	1	1	1.5	2	2
Cooling capacity		kW	2.2	2.8	3.6	4.5	5.0
Heating capacity		kW	2.5	3.2	4.0	5.0	5.8
Air volume		m^3/h	500	500	630	630	630
Cooling power input		W	50	50	60	60	60
Cooling current input		A	0.2	0.2	0.31	0.31	0.31
Heating power input		W	50	50	60	60	60
Heating current input		A	0.2	0.2	0.31	0.31	0.31
*Minimum line current		A	0.25	0.25	0.38	0.38	0.38
*Maximum fuse current		A	6	6	6	6	6
Sound pressure level		dB(A)	38	38	44	44	44
Power supply			220-240V 1 phase ~50Hz				
Piping interface	Liquid pipe	mm	Φ6.35	Φ6.35	Φ6.35	Φ6.35	Φ6.35
	Gas pipe	mm	Φ9.52	Φ9.52	Φ12.7	Φ12.7	Φ12.7
Drain pipe	External diameter × thickness	mm	Φ20×1.5	Φ20×1.5	Φ20×1.5	Φ20×1.5	Φ20×1.5
Dimensions	W×D×H	mm	843x180x275	843x180x275	940x200x298	940x200x298	940x200x298
Net weight		kg	10	10	12.5	12.5	12.5

Model			GMV-N56G/A3A-K	GMV-N63G/A3A-K	GMV-N71G/A3A-K
Horse Power		HP	2	3	3
Cooling capacity		kW	5.6	6.3	7.1
Heating capacity		kW	6.3	7.0	7.5
Air volume		m^3/h	750	750	750
Cooling power input		W	70	70	70
Cooling current input		A	0.31	0.31	0.31
Heating power input		W	70	70	70
Heating current input		A	0.31	0.31	0.31
*Minimum line current		A	0.5	0.5	0.5
*Maximum fuse current		A	6	6	6
Sound pressure level		dB(A)	44	44	44
Power supply			220-240V 1 phase ~50Hz		
Piping interface	Liquid pipe	mm	Φ9.52	Φ6.35	Φ6.35
	Gas pipe	mm	Φ15.9	Φ15.9	Φ15.9
Drain pipe	External diameter × thickness	mm	Φ30×1.5	Φ30×1.5	Φ30×1.5
Dimensions	W×D×H	mm	1128x395x313	1128x395x313	1128x395x313
Net weight		kg	15	15	15

Model			GMV-N22G/A2A-K	GMV-N28G/A2A-K	GMV-N36G/A2A-K	GMV-N45G/A2A-K	GMV-N50G/A2A-K
Horse Power		HP	1	1	1.5	2	2
Cooling capacity		kW	2.2	2.8	3.6	4.5	5.0
Heating capacity		kW	2.5	3.2	4.0	5.0	5.8
Air volume		m^3/h	500	500	630	630	630
Cooling power input		W	50	50	60	60	60
Cooling current input		A	0.2	0.2	0.31	0.31	0.31
Heating power input		W	50	50	60	60	60
Heating current input		A	0.2	0.2	0.31	0.31	0.31
*Minimum line current		A	0.25	0.25	0.38	0.38	0.38
*Maximum fuse current		A	6	6	6	6	6
Sound pressure level		dB(A)	38	38	44	44	44
Power supply			220-240V 1 phase ~50Hz				
Piping interface	Liquid pipe	mm	Φ6.35	Φ6.35	Φ6.35	Φ6.35	Φ6.35
	Gas pipe	mm	Φ9.52	Φ9.52	Φ12.7	Φ12.7	Φ12.7
Drain pipe	External diameter × thickness	mm	Φ20×1.5	Φ20×1.5	Φ20×1.5	Φ20×1.5	Φ20×1.5
Dimensions	W×D×H	mm	843x180x275	843x180x275	940x200x298	940x200x298	940x200x298
Net weight		kg	10	10	12.5	12.5	12.5

Model			GMV-N56G/A2A-K	GMV-N63G/A2A-K	GMV-N71G/A2A-K
Horse Power		HP	2	3	3
Cooling capacity		kW	5.6	6.3	7.1
Heating capacity		kW	6.3	7.0	7.5
Air volume		m^3/h	750	750	750
Cooling power input		W	70	70	70
Cooling current input		A	0.31	0.31	0.31
Heating power input		W	70	70	70
Heating current input		A	0.31	0.31	0.31
*Minimum line current		A	0.5	0.5	0.5
*Maximum fuse current		A	6	6	6
Sound pressure level		dB(A)	44	44	44
Power supply			220-240V 1 phase ~50Hz		
Piping interface	Liquid pipe	mm	Φ9.52	Φ6.35	Φ6.35
	Gas pipe	mm	Φ15.9	Φ15.9	Φ15.9
Drain pipe	External diameter × thickness	mm	Φ30×1.5	Φ30×1.5	Φ30×1.5
Dimensions	W×D×H	mm	1128x395x313	1128x395x313	1128x395x313
Net weight		kg	15	15	15

Model			GMV-N22G/A4A-K	GMV-N28G/A4A-K	GMV-N36G/A4A-K	GMV-N45G/A4A-K	GMV-N50G/A4A-K
Horse Power		HP	1	1	1.5	2	2
Cooling capacity		kW	2.2	2.8	3.6	4.5	5.0
Heating capacity		kW	2.5	3.2	4.0	5.0	5.8
Air volume		m^3/h	500	500	630	630	630
Cooling power input		W	50	50	60	60	60
Cooling current input		A	0.2	0.2	0.31	0.31	0.31
Heating power input		W	50	50	60	60	60
Heating current input		A	0.2	0.2	0.31	0.31	0.31
*Minimum line current		A	0.25	0.25	0.38	0.38	0.38
*Maximum fuse current		A	6	6	6	6	6
Sound pressure level		dB(A)	38	38	44	44	44
Power supply			220-240V 1 phase ~50Hz				
Piping interface	Liquid pipe	mm	Φ6.35	Φ6.35	Φ6.35	Φ6.35	Φ6.35
	Gas pipe	mm	Φ9.52	Φ9.52	Φ12.7	Φ12.7	Φ12.7
Drain pipe	External diameter × thickness	mm	Φ20×1.5	Φ20×1.5	Φ20×1.5	Φ20×1.5	Φ20×1.5
Dimensions	W×D×H	mm	843x180x275	843x180x275	940x200x298	940x200x298	940x200x298
Net weight		kg	10	10	12.5	12.5	12.5

Model			GMV-N56G/A4A-K	GMV-N63G/A4A-K	GMV-N71G/A4A-K
Horse Power		HP	2	3	3
Cooling capacity		kW	5.6	6.3	7.1
Heating capacity		kW	6.3	7.0	7.5
Air volume		m^3/h	750	750	750
Cooling power input		W	70	70	70
Cooling current input		A	0.31	0.31	0.31
Heating power input		W	70	70	70
Heating current input		A	0.31	0.31	0.31
*Minimum line current		A	0.5	0.5	0.5
*Maximum fuse current		A	6	6	6
Sound pressure level		dB(A)	44	44	44
Power supply			220-240V 1 phase ~50Hz		
Piping interface	Liquid pipe	mm	Φ9.52	Φ6.35	Φ6.35
	Gas pipe	mm	Φ15.9	Φ15.9	Φ15.9
Drain pipe	External diameter × thickness	mm	Φ30×1.5	Φ30×1.5	Φ30×1.5
Dimensions	W×D×H	mm	1128x395x313	1128x395x313	1128x395x313
Net weight		kg	15	15	15

Model			GMV-N22G/A8A-K	GMV-N28G/A8A-K	GMV-N36G/A8A-K	GMV-N45G/A8A-K	GMV-N50G/A8A-K
Horse Power		HP	1	1	1.5	2	2
Cooling capacity		kW	2.2	2.8	3.6	4.5	5.0
Heating capacity		kW	2.5	3.2	4.0	5.0	5.8
Air volume		m^3/h	500	500	630	630	630
Cooling power input		W	50	50	60	60	60
Cooling current input		A	0.2	0.2	0.31	0.31	0.31
Heating power input		W	50	50	60	60	60
Heating current input		A	0.2	0.2	0.31	0.31	0.31
*Minimum line current		A	0.25	0.25	0.38	0.38	0.38
*Maximum fuse current		A	6	6	6	6	6
Sound pressure level		dB(A)	38	38	44	44	44
Power supply			220-240V 1 phase ~50Hz				
Piping interface	Liquid pipe	mm	Φ6.35	Φ6.35	Φ6.35	Φ6.35	Φ6.35
	Gas pipe	mm	Φ9.52	Φ9.52	Φ12.7	Φ12.7	Φ12.7
Drain pipe	External diameter × thickness	mm	Φ20×1.5	Φ20×1.5	Φ20×1.5	Φ20×1.5	Φ20×1.5
Dimensions	W×D×H	mm	843x180x275	843x180x275	940x200x298	940x200x298	940x200x298
Net weight		kg	10	10	12.5	12.5	12.5

Model			GMV-N56G/A8A-K	GMV-N63G/A8A-K	GMV-N71G/A8A-K
Horse Power		HP	2	3	3
Cooling capacity		kW	5.6	6.3	7.1
Heating capacity		kW	6.3	7.0	7.5
Air volume		m^3/h	750	750	750
Cooling power input		W	70	70	70
Cooling current input		A	0.31	0.31	0.31
Heating power input		W	70	70	70
Heating current input		A	0.31	0.31	0.31
*Minimum line current		A	0.5	0.5	0.5
*Maximum fuse current		A	6	6	6
Sound pressure level		dB(A)	44	44	44
Power supply			220-240V 1 phase ~50Hz		
Piping interface	Liquid pipe	mm	Φ9.52	Φ6.35	Φ6.35
	Gas pipe	mm	Φ15.9	Φ15.9	Φ15.9
Drain pipe	External diameter × thickness	mm	Φ30×1.5	Φ30×1.5	Φ30×1.5
Dimensions	W×D×H	mm	1128x395x313	1128x395x313	1128x395x313
Net weight		kg	15	15	15

Model			GMV-N22G/C9A-K	GMV-N28G/C9A -K	GMV-N36G/C9A -K	GMV-N45G/C9A -K	GMV-N50G/C9A -K
Horse Power		HP	1	1	1.5	2	2
Cooling capacity		kW	2.2	2.8	3.6	4.5	5.0

Heating capacity		kW	2.5	3.2	4.0	5.0	5.8
Air volume		m^3/h	500	500	630	630	630
Cooling power input		W	50	50	60	60	60
Cooling current input		A	0.2	0.2	0.31	0.31	0.31
Heating power input		W	50	50	60	60	60
Heating current input		A	0.2	0.2	0.31	0.31	0.31
*Minimum line current		A	0.25	0.25	0.38	0.38	0.38
*Maximum fuse current		A	6	6	6	6	6
Sound pressure level		dB(A)	38	38	44	44	44
Power supply			220-240V 1 phase ~50Hz				
Piping interface	Liquid pipe	mm	Φ6.35	Φ6.35	Φ6.35	Φ6.35	Φ6.35
	Gas pipe	mm	Φ9.52	Φ9.52	Φ12.7	Φ12.7	Φ12.7
Drain pipe	External diameter × thickness	mm	Φ20×1.5	Φ20×1.5	Φ20×1.5	Φ20×1.5	Φ20×1.5
Dimensions	W×D×H	mm	843x180x275	843x180x275	940x200x298	940x200x298	940x200x298
Net weight		kg	10	10	12.5	12.5	12.5

Model			GMV-N56G/ C9A -K	GMV-N63G/ C9A -K	GMV-N71G/ C9A -K
Horse Power		HP	2	3	3
Cooling capacity		kW	5.6	6.3	7.1
Heating capacity		kW	6.3	7.0	7.5
Air volume		m^3/h	750	750	750
Cooling power input		W	70	70	70
Cooling current input		A	0.31	0.31	0.31
Heating power input		W	70	70	70
Heating current input		A	0.31	0.31	0.31
*Minimum line current		A	0.5	0.5	0.5
*Maximum fuse current		A	6	6	6
Sound pressure level		dB(A)	44	44	44
Power supply			220-240V 1 phase ~50Hz		
Piping interface	Liquid pipe	mm	Φ9.52	Φ6.35	Φ6.35
	Gas pipe	mm	Φ15.9	Φ15.9	Φ15.9
Drain pipe	External diameter × thickness	mm	Φ30×1.5	Φ30×1.5	Φ30×1.5
Dimensions	W×D×H	mm	1128x395x313	1128x395x313	1128x395x313
Net weight		kg	15	15	15

Model			GMV-N22G/E3A-K	GMV-N28G/ E3A -K	GMV-N36G/ E3A -K	GMV-N45G/ E3A -K	GMV-N50G/ E3A -K
Horse Power		HP	1	1	1.5	2	2
Cooling capacity		kW	2.2	2.8	3.6	4.5	5.0
Heating capacity		kW	2.5	3.2	4.0	5.0	5.8
Air volume		m^3/h	500	500	630	630	630
Cooling power input		W	50	50	60	60	60
Cooling current input		A	0.2	0.2	0.31	0.31	0.31
Heating power input		W	50	50	60	60	60
Heating current input		A	0.2	0.2	0.31	0.31	0.31
*Minimum line current		A	0.25	0.25	0.38	0.38	0.38

*Maximum fuse current		A	6	6	6	6	6
Sound pressure level		dB(A)	38	38	44	44	44
Power supply			220-240V 1 phase ~50Hz				
Piping interface	Liquid pipe	mm	Φ6.35	Φ6.35	Φ6.35	Φ6.35	Φ6.35
	Gas pipe	mm	Φ9.52	Φ9.52	Φ12.7	Φ12.7	Φ12.7
Drain pipe	External diameter × thickness	mm	Φ20×1.5	Φ20×1.5	Φ20×1.5	Φ20×1.5	Φ20×1.5
Dimensions	W×D×H	mm	843x180x275	843x180x275	940x200x298	940x200x298	940x200x298
Net weight		kg	10	10	12.5	12.5	12.5

Model			GMV-N56G/ E3A -K	GMV-N63G/ E3A -K	GMV-N71G/ E3A -K
Horse Power		HP	2	3	3
Cooling capacity		kW	5.6	6.3	7.1
Heating capacity		kW	6.3	7.0	7.5
Air volume		m^3/h	750	750	750
Cooling power input		W	70	70	70
Cooling current input		A	0.31	0.31	0.31
Heating power input		W	70	70	70
Heating current input		A	0.31	0.31	0.31
*Minimum line current		A	0.5	0.5	0.5
*Maximum fuse current		A	6	6	6
Sound pressure level		dB(A)	44	44	44
Power supply			220-240V 1 phase ~50Hz		
Piping interface	Liquid pipe	mm	Φ9.52	Φ6.35	Φ6.35
	Gas pipe	mm	Φ15.9	Φ15.9	Φ15.9
Drain pipe	External diameter × thickness	mm	Φ30×1.5	Φ30×1.5	Φ30×1.5
Dimensions	W×D×H	mm	1128x395x313	1128x395x313	1128x395x313
Net weight		kg	15	15	15

Notes:

①. a.Rated Cooling capacity test conditions: indoor 27°C DB/19°C WB, outdoor 35°C DB; connection pipe length: 5 m, without height drop between units.

②. b.Rated heating capacity test conditions: indoor 20°C DB, outdoor 7°C DB/6 °C WB; connection pipe length: 5 m, without height drop between units.

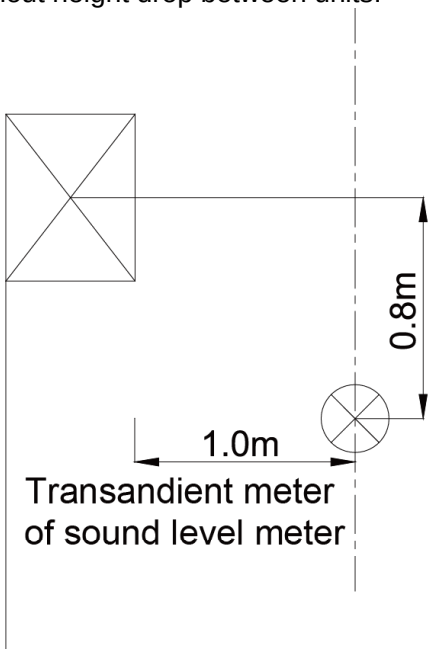

3.14 Super High Static Pressure Duct Type Indoor Unit

Model			GMV-ND22PHS/B-T	GMV-ND25PHS/B-T	GMV-ND28PHS/B-T	GMV-ND32PHS/B-T	GMV-ND36PHS/B-T	GMV-ND40PHS/B-T
Horse Power		HP	1	1	1.5	2	2	2
Cooling capacity		kW	2.2	2.5	2.8	3.2	3.6	4
Heating capacity		kW	2.5	2.8	3.2	3.6	4	4.5
Air Volume		m^3/h	550	550	550	600	600	850
External Static Pressure		Pa	60/0~150	60/0~150	60/0~150	60/0~150	60/0~150	60/0~150
Cooling power input		W	55	55	55	65	65	85
Cooling current input		A	0.3	0.3	0.3	0.3	0.3	0.4
Heating power input		W	55	55	55	65	65	85
Heating current input		A	0.3	0.3	0.3	0.3	0.3	0.4
*Minimum line current		A	0.375	0.375	0.375	0.375	0.375	0.5
*Maximum fuse current		A	6	6	6	6	6	6
Sound pressure level		dB(A)	33	33	33	33	33	36
Power supply**			220-240V 1 phase ~50Hz/208-230V 1 phase ~60Hz					
Pipe diameter	Liquid pipe	mm	Φ6.35	Φ6.35	Φ6.35	Φ6.35	Φ6.35	Φ6.35
	Gas pipe	mm	Φ9.52	Φ9.52	Φ9.52	Φ12.7	Φ12.7	Φ12.7
Drain pipe	External diameter × thickness	mm	Φ25×2.5	Φ25×2.5	Φ25×2.5	Φ25×2.5	Φ25×2.5	Φ25×2.5
Dimensions	W×D×H	mm	700×300×700	700×300×700	700×300×700	700×300×700	700×300×700	700×300×700
Net weight		kg	32	32	32	32	32	34

Model			GMV-ND45PHS/B-T	GMV-ND50PHS/B-T	GMV-ND56PHS/B-T	GMV-ND63PHS/B-T	GMV-ND71PHS/B-T	GMV-ND80PHS/B-T
Horse Power		HP	2	2	2	3	3	3
Cooling capacity		kW	4.5	5.0	5.6	6.3	7.1	8.0
Heating capacity		kW	5.0	5.6	6.3	7.1	8.0	9.0
Air Volume		m^3/h	850	850	1000	1000	1250	1250
External Static Pressure		Pa	60/0~150	60/0~150	90/0~200	90/0~200	90/0~200	90/0~200
Cooling power input		W	85	85	90	90	100	100
Cooling current input		A	0.4	0.4	0.4	0.4	0.5	0.5

Heating power input		W	85	85	90	90	100	100
Heating current input		A	0.4	0.4	0.4	0.4	0.5	0.5
*Minimum line current		A	0.5	0.5	0.5	0.5	0.5	0.5
*Maximum fuse current		A	6	6	6	6	6	6
Sound pressure level		dB(A)	36	36	37	37	38	38
Power supply**			220-240V 1 phase ~50Hz/208-230V 1 phase ~60Hz					
Pipe diameter	Liquid pipe	mm	Φ6.35	Φ6.35	Φ9.52	Φ9.52	Φ9.52	Φ9.52
	Gas pipe	mm	Φ12.7	Φ12.7	Φ15.9	Φ15.9	Φ15.9	Φ15.9
Drain pipe	External diameter × thickness	mm	Φ25×2.5	Φ25×2.5	Φ25×2.5	Φ25×2.5	Φ25×2.5	Φ25×2.5
Dimensions	W×D×H	mm	700×300×700	700×300×700	700×300×1000	700×300×1000	700×300×1000	700×300×1000
Net weight		kg	34	34	43	43	43	43

Model			GMV-ND90PHS/B-T	GMV-ND100PHS/B-T	GMV-ND112PHS/B-T	GMV-ND125PHS/B-T	GMV-ND140PHS/B-T	GMV-ND160PHS/B-T
Horse Power		HP	4	4	4	5	5	6
Cooling capacity		kW	9.0	10.0	11.2	12.5	14.0	16.0
Heating capacity		kW	10.0	11.2	12.5	14.0	16.0	18.0
Air Volume		m^3/h	1800	1800	2000	2000	2350	2500
External Static Pressure		Pa	90/0~200	90/0~200	90/0~200	90/0~200	90/0~200	90/0~200
Cooling power input		W	140	140	160	160	220	230
Cooling current input		A	0.6	0.6	0.7	0.7	1.0	1.0
Heating power input		W	140	140	160	160	220	230
Heating current input		A	0.6	0.6	0.7	0.7	1.0	1.0
*Minimum line current		A	0.75	0.75	0.875	0.875	1.25	1.25
*Maximum fuse current		A	6	6	6	6	6	6
Sound pressure level		dB(A)	40	40	40	40	42	44
Power supply**			220-240V 1 phase ~50Hz/208-230V 1 phase ~60Hz					
Pipe diameter	Liquid pipe	mm	Φ9.52	Φ9.52	Φ9.52	Φ9.52	Φ9.52	Φ9.52
	Gas pipe	mm	Φ15.9	Φ15.9	Φ15.9	Φ15.9	Φ15.9	Φ19.05
Drain pipe	External diameter ×	mm	Φ25×2.5	Φ25×2.5	Φ25×2.5	Φ25×2.5	Φ25×2.5	Φ25×2.5

	thickness							
Dimensions	W×D×H	mm	700×300×1400	700×300×1400	700×300×1400	700×300×1400	700×300×1400	700×300×1400
Net weight		kg	57	57	57	57	58	58

Notes:

① Rated cooling capacity test conditions: indoor 27°C DB/19°C WB, outdoor 35°C DB; connection pipe length: 5 m, without height drop between units.

② Rated heating capacity test conditions: indoor 20°C DB, outdoor 7°C DB/6 °C WB; connection pipe length: 5 m, without height drop between units.

③ In the column of “Unit external static pressure”: The figure before “/” indicates the default external static pressure of unit before delivery, and the figures after indicate the adjustable static pressure range of unit.

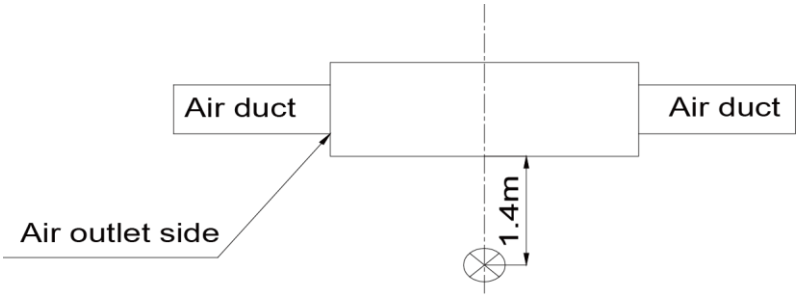

Transandient meter of sound level meter

CONTROL

CONTROL

1 Operation Flowchart

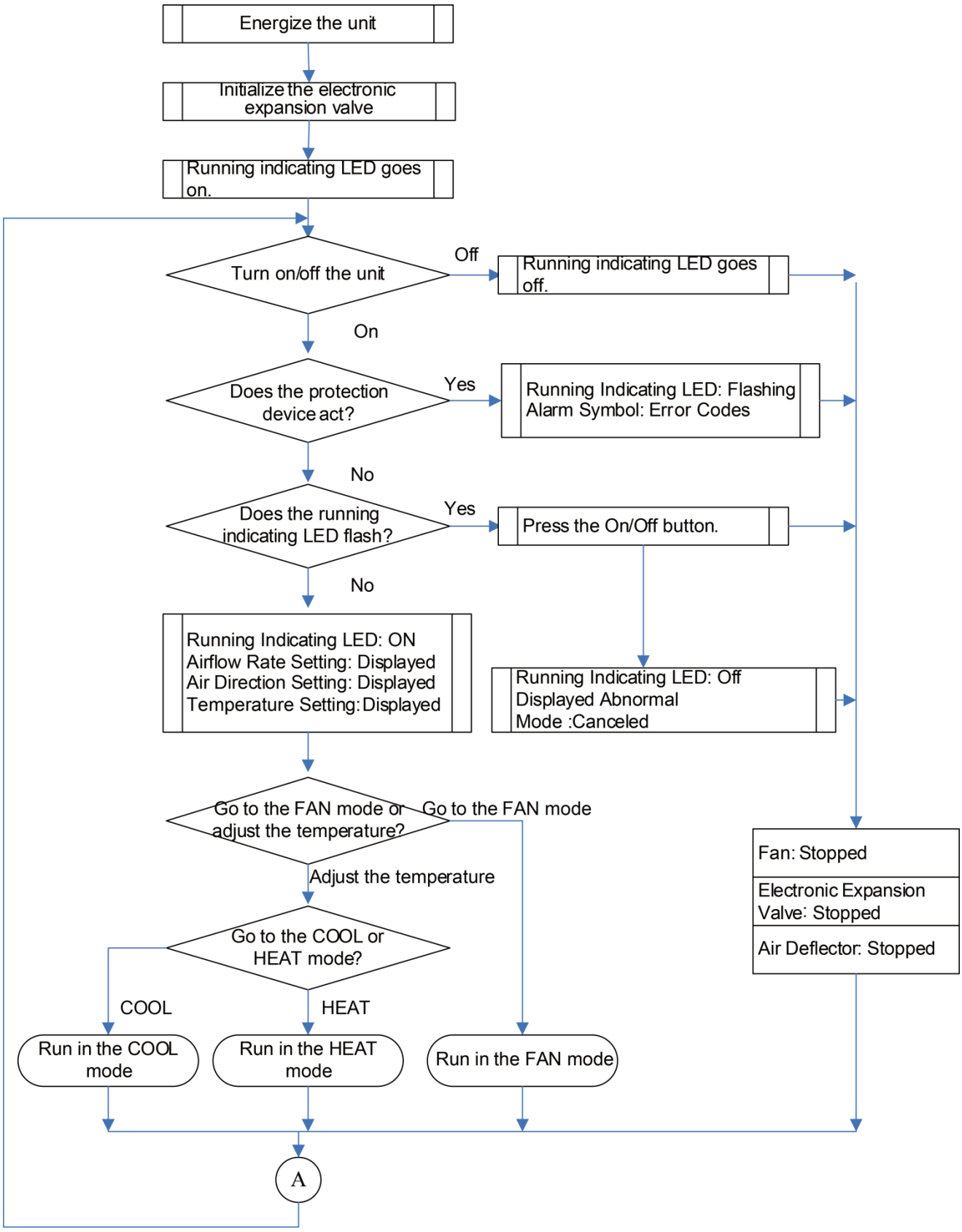

2 Wired Controller

2.1 Control panel

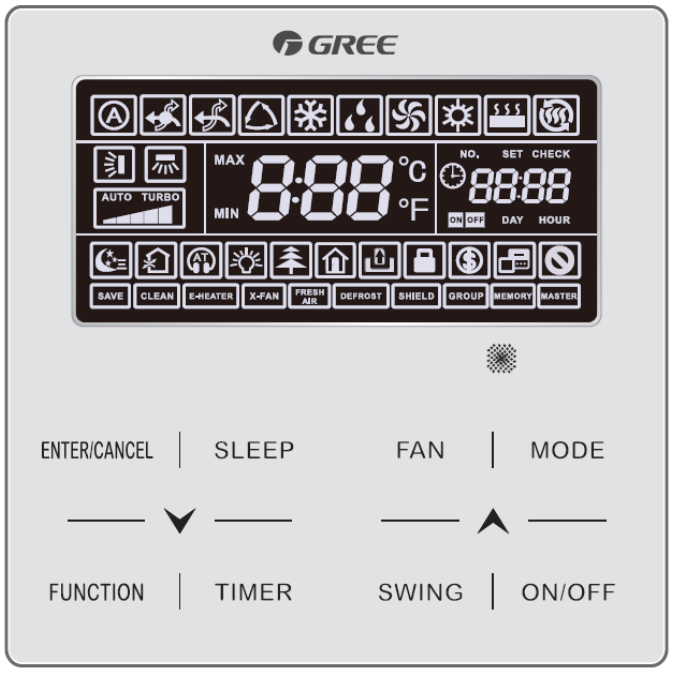

Fig.2.1 Appearance of wired controller

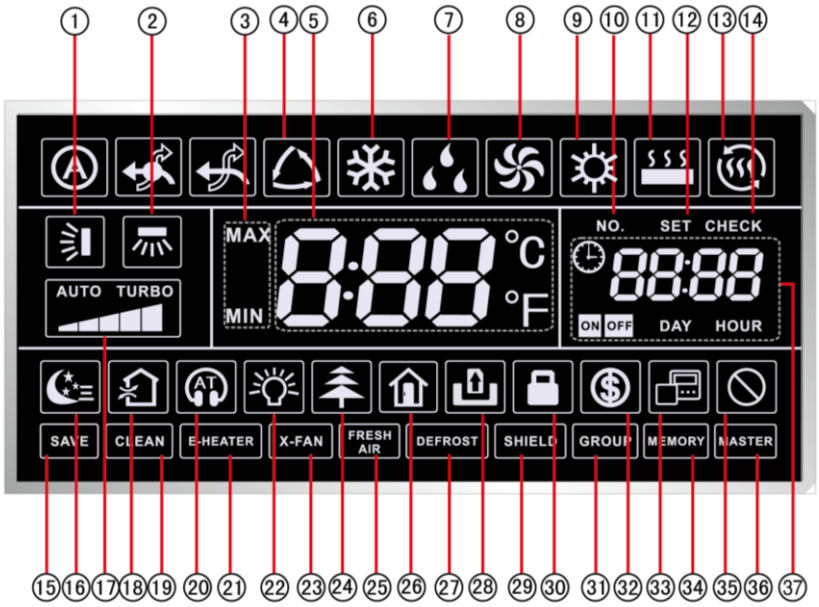

Fig2.2 LED graphics of wired controller

Table 2.1 LED display instruction

No.	Symbols	Instructions
1		Up and down swing function
2	*	Left and right swing function
3	MAX MIN	It's valid under Save mode and displays during setting process. Temperature lower limit for Cooling: Limit the minimum temperature value under Cooling or Dry mode. Temperature upper limit for Heating: Limit the maximum temperature value under Heating, Space Heating or 3D Heating mode.

4	*	Auto mode (Under Auto mode, the indoor units will automatically select their operating mode as per the temperature change so as to make the ambient comfortable.)
5	°C °F	It shows the setting temperature value(In case the wired controller is controlling a Fresh Air Indoor Unit, then the temperature zone will display FAP)
6		Cooling mode
7		Dry mode
8		Fan mode
9		Heating mode
10	NO.	When inquiring or setting project number of indoor unit, it displays "NO." icon
11	*	Floor Heating mode (When Heating and Floor Heating simultaneously shows up, it indicates 3D Heating is activated.)
12	SET	Display "SET" icon under parameter setting interface
13	*	Space Heating mode
14	CHECK	Display "CHECK" icon under parameter view interface
15	SAVE	Outdoor unit operates under Save mode/upper limit of system capacitor less 100%/remote Save status
16		Sleep status
17	AUTO TURBO	Current set fan speed (including auto, low speed, medium-low speed, medium speed, medium-high speed, high speed and turbo seven status)
18	*	Air status, Indoor unit optional function
19	CLEAN	Remind to clean the filter
20	AT	Quiet status (including Quiet and Auto Quiet two status)
21	E-HEATER *	Allow auxiliary electric heating On icon
22		Light On/Off function
23	X-FAN	X-fan function
24	*	Health function, Indoor unit optional function
25	FRESH AIR *	Reserved function
26		Out function
27	DEFROST	Outdoor unit defrosting status

28		Gate-control function
29	SHIELD	Shielding status
30		Child Lock status
31	GROUP	One wired controller controls multiple indoor units
32		Save status of indoor unit
33		It indicates the current wired controller is the slave wired controller (address of wired controller is 02)
34	MEMORY	Memory status (The indoor unit resumes the original setting state after power failure and then power recovery)
35		Invalid operation
36	MASTER	Current wired controller connects master indoor unit
37	88:88 ON OFF DAY HOUR	Timer zone:Display system clock and timer status
NOTICE! When wired controller is connected with different indoor units, some functions will be different		

Button Graphics

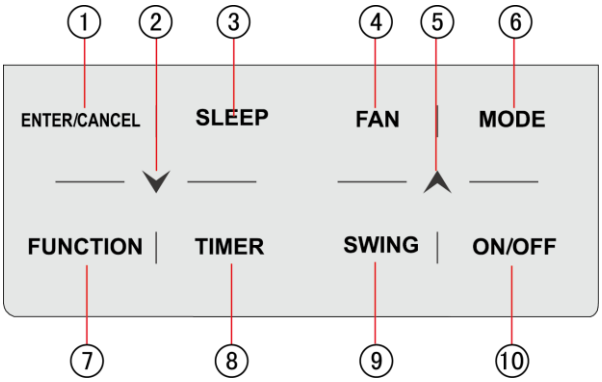

Fig.2.3 Button graphics

2.2 Installation and removal

2.2.1 Installation dimensions

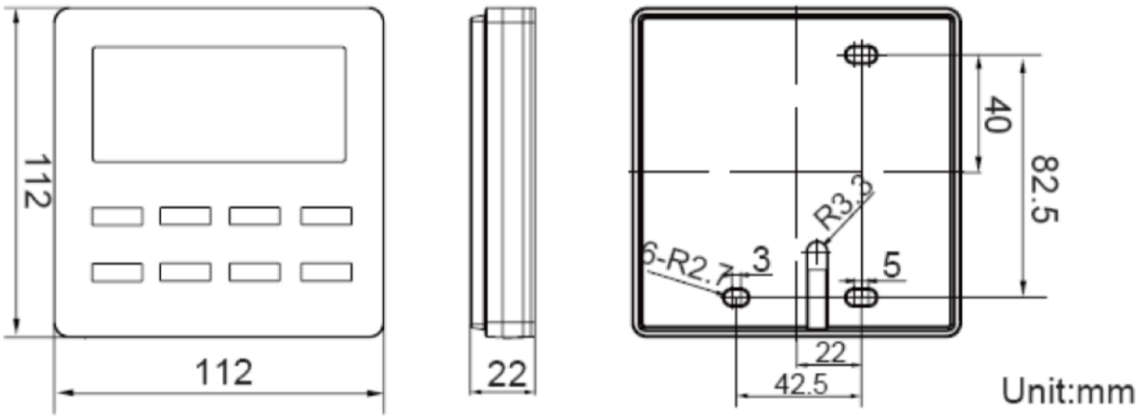

Fig.2.4 Installation dimensions

2.2.2 Installation method

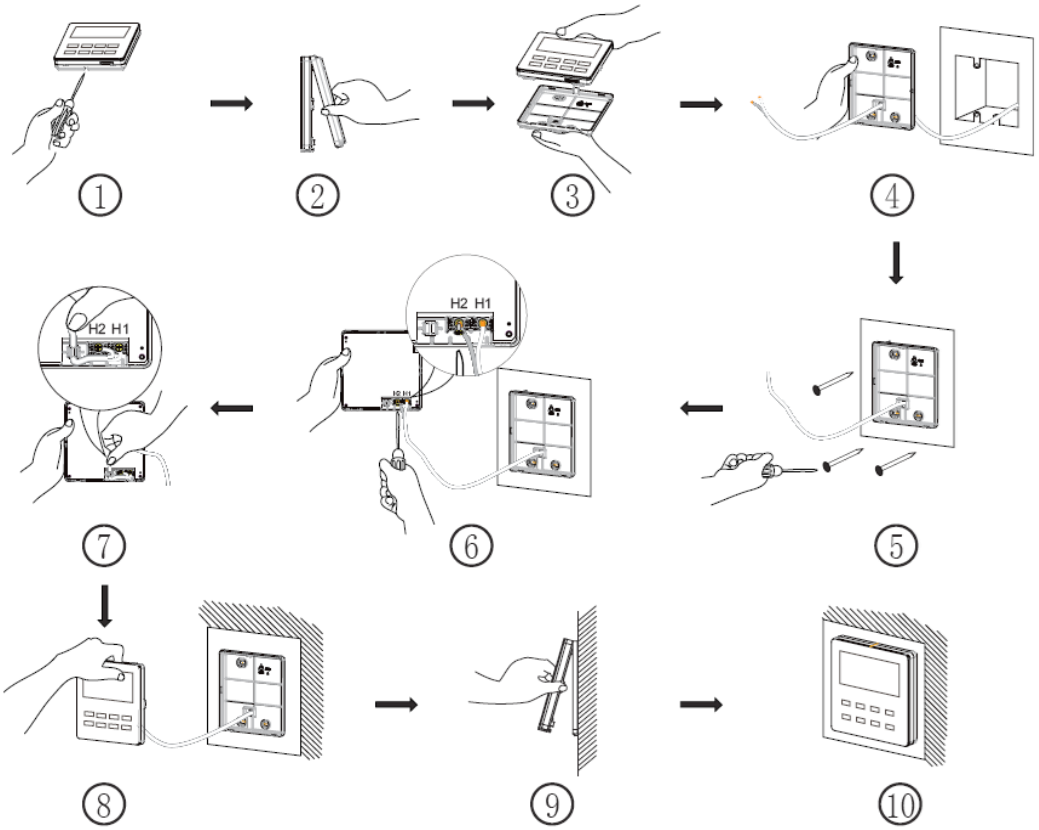

Fig.2.5 Installation of Wired Controller

Above is a simple installation method of wired controller. Please pay attention to the following:

◆Before installation, disconnect power of the indoor unit. Do not operate when power is connected.

◆Pull out the 2-core twisted pair cable from the installation hole on the wall and lead it through the hole on the back plate of wired controller.

◆Place the wired controller on wall and secure its back plate on wall with screw M4X25.

◆Connect the 2-core twisted pair cable to terminal H1 and terminal H2. Tighten up the screws.

◆Stick the cable in the slot that is left of the terminals and buckle the wired controller's panel with its back plate.

Note:

If caliber of the communication cord is too large, which causes difficulty in leading or sticking the cord according to above point 2 and point 5, strip some of the sheath of the communication cable to meet the installation requirement.

2.2.3 Removal method

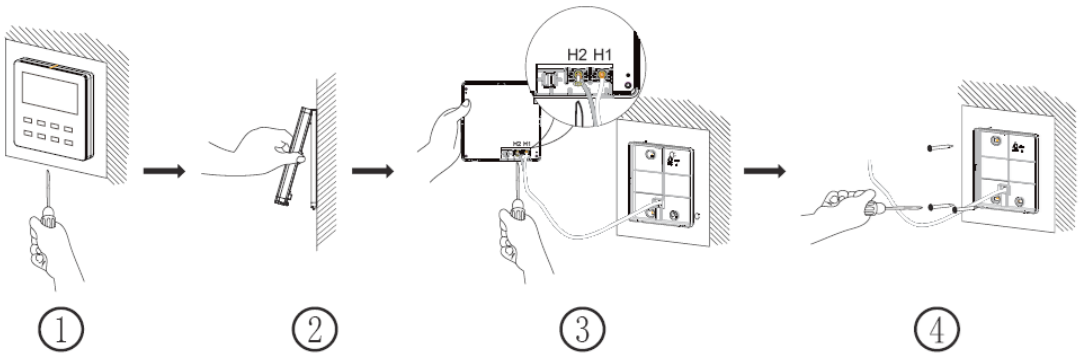

Fig.2.5Removal of Wired Controller

2.2.4 Connection of communication cord

There are 4 ways to connect wired controller with indoor units' network:

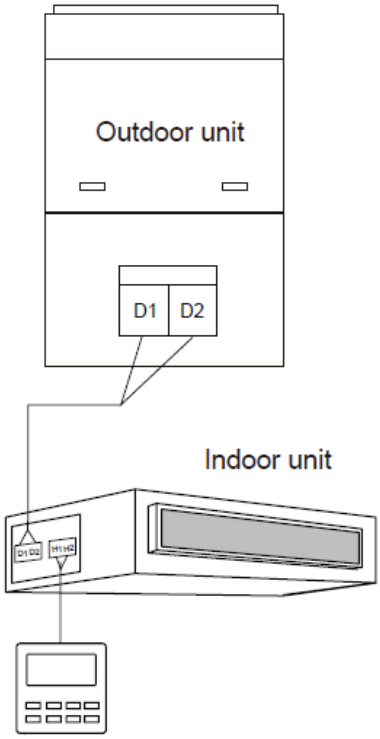

Fig.2.7 One wired controller controls one indoor unit

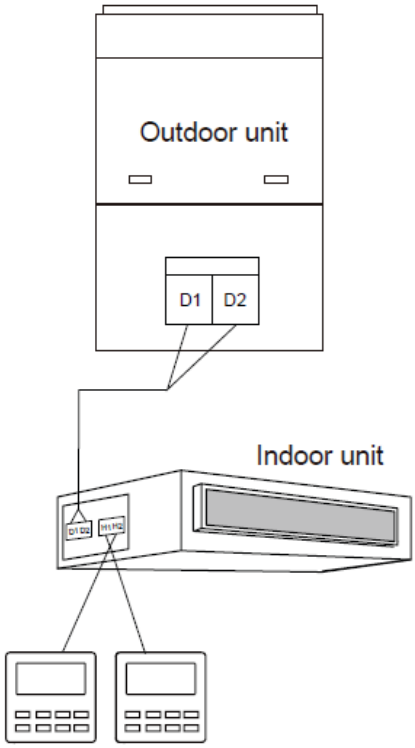

Fig.2.8Two wired controllers control one indoor unit

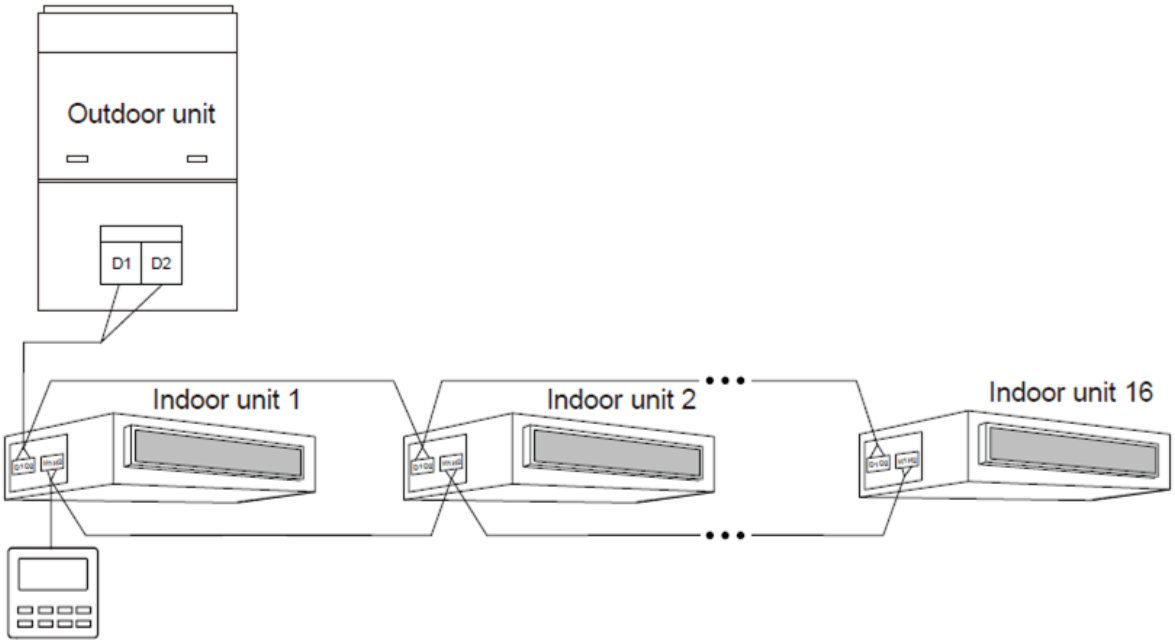

Fig.2.9 One wired controller controls multiple indoor units simultaneously.

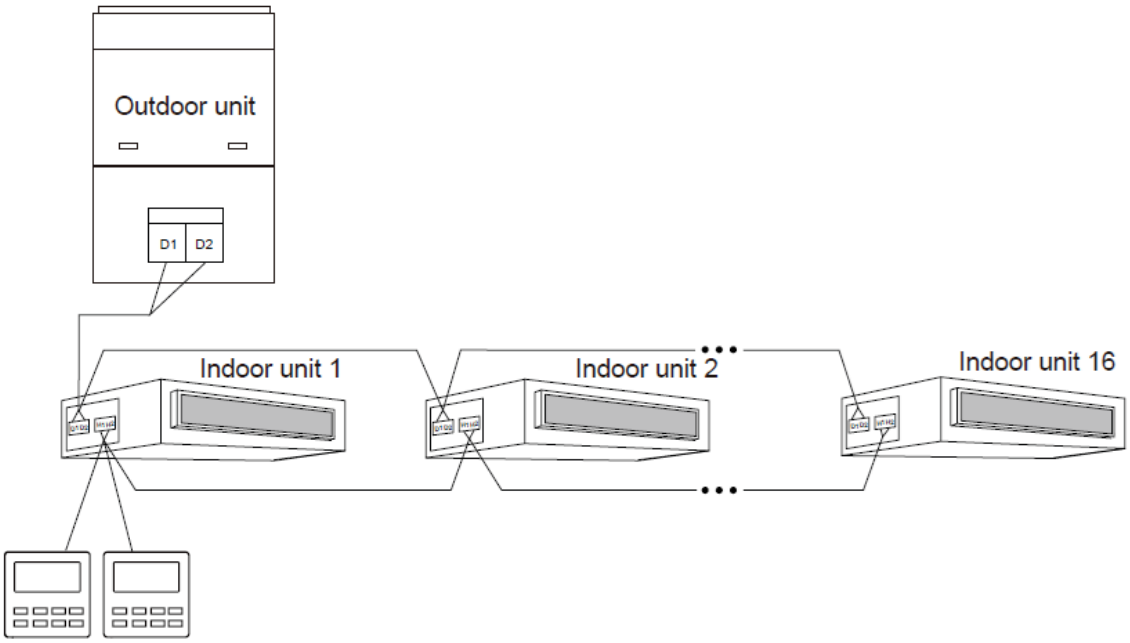

Fig.2.10 Two wired controllers control multiple indoor units simultaneously.

Note:

Floor standing indoor unit only applicable to Fig.2.7

3 Remote Controller

3.1 Remote controller YAP1F

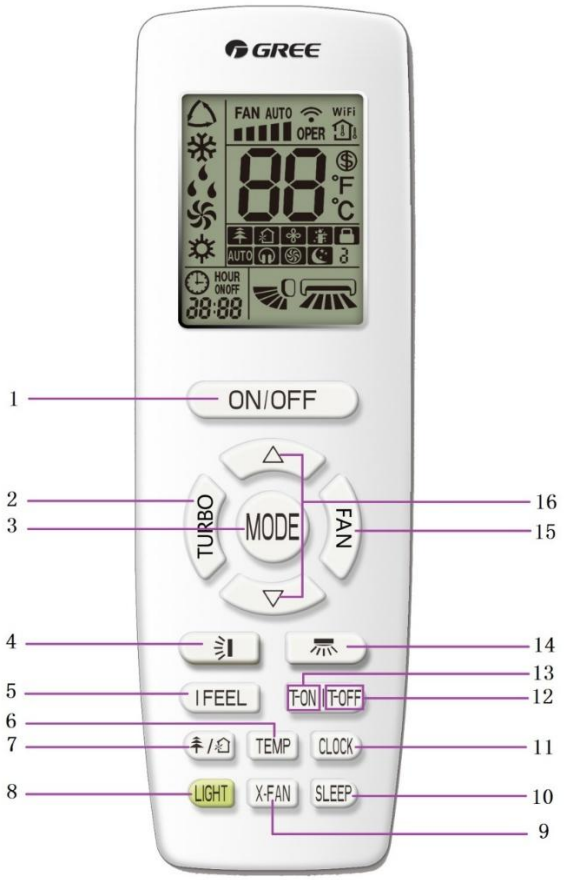

Button name and function introduction

No.	Button name	Function
1	ON/OFF	Turn on or turn off the unit
2	TURBO	Set turbo function
3	MODE	Set operation mode
4		Set up&down swing status
5	I FEEL	Set I FEEL function
6	TEMP	Switch temperature displaying type on the unit's display
7		Set health function and air function
8	LIGHT	Set light function
9	X-FAN	Set X-FAN function
10	SLEEP	Set sleep function
11	CLOCK	Set clock of the system
12	TOFF	Set timer off function
13	TON	Set timer on function
14		Set left&right swing status
15	FAN	Set fan speed
16	△/▽	Set temperature and time

3.2 Remote controller YV1L1

No.	Button name	Function
1	ON/OFF	Turn on or turn off the unit
2	FAN	Set fan speed
3	▲/▼	Set temperature and time
4	MODE	Set operation mode

5		Set quiet function
6		Set health function and air function
7		Set left&right swing status
8		Set up&down swing status
9	X-FAN	Set X-FAN function
10	TIMER ON	Set timer on function
11	TIMER OFF	Set timer off function
12	SAVE	Set energy-saving function
13	SLEEP	Set sleep function
14	LIGHT	Set light function
15	CLOCK	Set clock of the system
16	I FEEL	Set I FEEL function
17	TEMP	Switch temperature displaying type on the unit's display

4 Panel Display

4.1 Control Panel

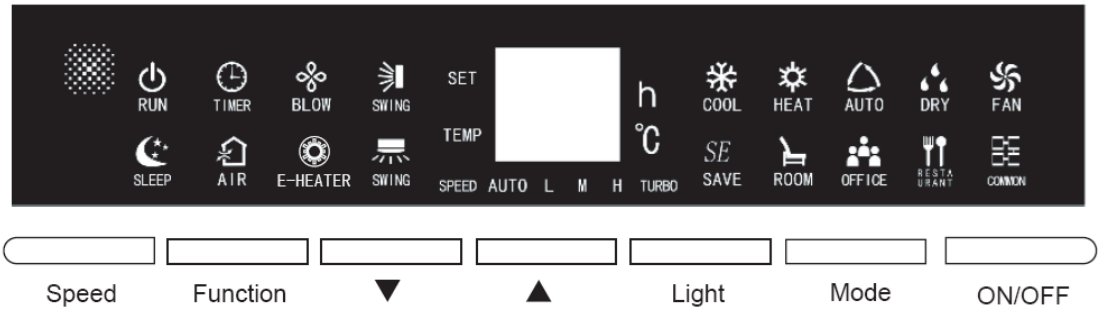

Notes:

"AIR" function is an optional function of indoor unit, for the unit without such function, this function is invalid; "E-HEATER", "ROOM", "OFFICE", "RESTAURANT", "COMMON" are obligate functions of indoor unit that cannot be set.

4.2 Operational Instruction

4.2.1 Start up and close down the unit

Press "ON/OFF" button to start up the unit. Press "ON/OFF" button to close down the unit.

4.2.2 Mode Setting

Under power-on status, each time press "Mode" button, the mode will be switched according to the following order circularly:

Notes:

- Only the master indoor unit can set auto mode;
- Under auto mode, if the indoor unit is in auto cooling, the "⌂"and"❄" icons are on; if the indoor unit is in auto heating, the "⌂"and"☼" icons are on.

4.2.3 Setting of Light ON/OFF Function

(1) Light ON/OFF Function: can set the ON and OFF of light for display panel.

(2) Under power-on or power-off status, press "Light" button to turn on and turn off the light of display

panel.

(3)When the light of display panel is turned off, press the other buttons other than “Light” button, the light on display panel will be turned off after 5 seconds.

4.2.4 Temperature Setting

Press “▼”or“▲” buttons under power-on status, the set temperature will be increased or decreased at 1℃ each time; when long press the buttons, the temperature will be increased or decreased at 1℃ every 0.3 seconds. The temperature setting range is: 16℃～30℃.

Notes:

Under auto mode, the temperature cannot be set through pressing “▼”or“▲” buttons.

4.2.5 Function Setting

Press “Function” button under power-on or power-off status, it can enter into function setting status. Under function setting status, press “ON/OFF” button or without pressing any buttons for consecutive 5 seconds, it will quit the function setting status.

(1) Up and down swing function settings

Press “Function” button under power-on status to switch to up and down swing function, when “SWING” icon flickers, press “▲”or“▼” button to start up or cancel the up and down swing function. If “SWING” is on it means the function has been started up; if “SWING” icon is off it means the function has been canceled.

(2) Left and right swing function settings

Press “Function” button under power-on status to switch to left and right swing function, when “SWING” flickers, press “▲”or“▼” button to start up or cancel the left and right swing function. If “SWING” icon is on it means the function has been started up; if “SWING” icon is off it means the function has been canceled.

(3) Settings of X-fan

X-fan function: after closing down the unit under cooling and dry mode, the air conditioner will automatically dry the water of evaporator of indoor unit to prevent breeding of bacteria and mildew.

Turn on or cancel X-fan function: with the unit is started up, under cooling or dry mode, press “Function” button to switch to X-fan function, when “BLOW” flickers, press “▲”or“▼” buttons to start or cancel X-fan function. If “BLOW” icon is on it means the X-fan function has been started up, if “BLOW” icon is off it means the X-fan function has been canceled.

(4) Settings of Timer Function

Timer Function: under power-on status, the count down of power-off time can be set. Under power-off status, the count down of power-on time can be set.

Timer setting: press “function” button to switch to timer function, when “TIMER” icon flichers, press “▲”or“▼” button to adjust the setting time. After setting the time, press “ON/OFF” button or without pressing any buttons for consecutive 5 seconds, the setting time is confirmed and quit the function setting status. After quiting the function setting status, the “TIMER” icon is on, it means the timer function has been turned on.

Cancel timer: press “Function” button to switch to timer function, when “TIMER” icon flickers, press “▲”or“▼” button to set the time to be “00”, then the timer function is canceled; press “ON/OFF” button or without pressing any buttons for consecutive 5 seconds, it will quit the function setting status. After quiting

the function setting status, the "TIMER" icon is off, it means the timer function has been canceled.

Count down setting range: 00~24 hours, in which "00" refers to closedown of timer function. Each time press "▲" or "▼" button, if it is within 10 hours, it will increase or decrease 0.5 hour each time, if long press "▲" or "▼" button, it will increase or decrease 0.5 hour every 0.3 second; if it is over 10 hours, each time press "▲" or "▼" button will increase or decrease 1 hour each time, and if long press "▲" or "▼" button, it will increase or decrease 1 hour every 0.3 second.

(5) Setting of air renewal function

Air renewal function: through adjusting the fresh air volume to improve the air quality and keep the indoor fresh air.

Air renewal setting: press "Function" button to switch to air renewal function, when "AIR" icon flickers, press "▲"or"▼" button to adjust the air renewal level; after setting air renewal level, press "ON/OFF" button or without pressing any buttons for consecutive 5 seconds, the air renewal function has been confirmed to be turned on and then quit the function setting status. After quiting the function setting status, the "AIR" icon is on, it means the air renewal function has been turned on.

Cancel air renewal: press "Function" button to switch to air renewal function, when "AIR" icon flickers, press "▲"or"▼" button to set the air renewal as "00", then the air renewal function is canceled; press "ON/OFF" button or without pressing any buttons for consecutive 5 seconds, it will quit the function setting status. After quiting function setting status, the "AIR" icon is off, it means the air renewal function is canceled.

Adjustment range of air renewal level: it can adjust the air renewal level to be 00~10, in which "00" refers to closing down air renewal function.

(6) Setting of Sleeping Function

Sleeping function: set the unit to enter into sleeping operational status, the unit will operate according to the preset sleeping temperature curve to create a confortable sleeping environment and improve sleeping quality.

Turn on or cancel sleeping function: press "Function" button under power-on status to switch to sleeping function, when "SLEEP" icon flickers, press "▲"or"▼" button to turn on or cancel sleeping function. If "SLEEP" icon is on, it means the sleeping function is turned on; if "SLEEP" icon is off, it means the sleeping function is canceled.

There is no sleeping function under auto and swing mode.

(7) Setting of energy-saving function

Energy-saving function: through setting the lower temperature limit of cooling and dry mode and upper temperature limit of heating mode, to make the air conditioner operate in a smaller temperature range, thus save energy.

Turn on cooling energy-saving: with the unit is started up, under cooling or dry mode, press "Function" button to switch to energy-saving function, when "SE SAVE" icon flickers, press "▲"or "▼" button to adjust cooling temperature limit, after setting cooling temperature limit, press "ON/OFF" button or without pressing any buttons for consecutive 5 seconds, the energy-saving function is confirmed to be turned on and quit the function setting status. After quiting function setting status, the "SE SAVE" icon is on, it means the

cooling energy-saving function has been turned on.

Turn on heating energy-saving: with the unit is started up, under heating mode, press “Function” button to switch to energy-saving function, press “▲”or “▼” button to adjust heating temperature limit, if the “SE SAVE” icon flickers, after setting heating temperature limit, press “ON/OFF” button or without pressing any buttons for consecutive 5 seconds, the energy-saving function is confirmed to be turned on and quit the function setting status. After quiting function setting status, the “SE SAVE” icon is on, it means the heating energy-saving function has been turned on.

Cancel energy-saving function: under energy-saving function setting status or under normal power-on status, press “Function” button and “▼” button simultaneously to cancel energy-saving function, when “SE SAVE” icon is off, it means the energy-saving function is canceled.

4.2.6 Speed Settings

Under power-on status, press “Speed” button, the speed will be circularly switched according to the following order:

Notes:

◆Under dry mode, the speed cannot be adjusted, it will be automatically set to be low.

◆When the speed of indoor unit is adjusted to be auto speed, the indoor unit will automatically change speed according to the indoor ambient temperature, to make the indoor ambient temperature be more stable and comfortable.

4.2.7 Special Function

(1) Inquire address of indoor unit

Under power-off status, press “Speed” button and “ON/OFF” button simultaneously for 5 seconds, then the “88” LED will display the engineering No. of the indoor unit for 5 seconds; if the engineering No. is over two digits, it will circularly display the higher two digits and lower two digits.

(2) Inquire unit type

Under power-off status, simultaneously press “Mode” button and “ON/OFF” button for 5 seconds, then the “88” LED will display corresponding code for 5 seconds: heat pump unit will display “nA”, cooling only unit will display “nC”, heating only uint will display “nH”, swing type unit will display “nF”.

(3) Setting of power-fail memory function

Under power-off status, simultaneously press “Mode” button and “▲” button for 5 seconds to switch the memory method: if “88” LED displays “on”, it means it will memorize the on and off status of the unit after being de-energized (that is, after de-energizing and energizing the unit, the unit will resume to be the status before it is de-energized); if “88” LED displays “oF”, it means it will not memorized the on and off status of the unit after being de-energized (that is, after de-energizing and energizing the unit, the unit will still be power-off status).

(4) Setting of master indoor unit function

Under power-off status, long press “Mode” button for 5 seconds to set the indoor unit to be master pattern indoor unit (master indoor unit), after finishing setting, the “88” LED will display “UC” for 5 seconds.

Notes:

when the masterindoor unit is started up, the operational light “RUN”on display panel will flicker for

three times.

(5) Settings of Child Lock Function

Under power-on or power-off status, simultaneously press “▲” button and “▼” button for 5 seconds, it will turn on child lock function, the “88” LED will flicker and display “An” for three times; press “▲” button and “▼” button again for 5 seconds, it will cancel child lock function.

Under child lock status, the unit will not response if pressing other buttons, and the “88” LED will flicker and display “An” to remind the user that the unit is under child lock status.

(6) Long-distance Shielding Function

Long-distance shielding function: long-distance monitor or centralized controller can remotely control related functions of indoor unit or conduct shielding to make the operation invalid, thus realize long-distance control function.

Long-distance shielding function can be divided into full shielding and partial shielding. When it is in full shielding, all the remote control or operation by pressing buttons to the indoor unit will be invalid. If it is in partial shielding, the remote control or operation by pressing buttons to the shielded function of indoor unit will be invalid.

When long-distance monitor or centralized controller conduct long-distance shielding to indoor unit, if the user wants to remotely control or operate the unit by pressing buttons, the “88” LED will flicker and display “Ay” to remind the user that it is under long-distance shielding status.

5 Introduction to Unit Functions

Function Application of IDUs

Indoor unit functions cover user operation functions and engineering application functions. For user operation functions, refer to operating instructions of the IDU, wired controller, and remote controller.

Engineering application functions include:

SN	Function Name
1	Master IDU query and settings
2	Indoor unit project number query and settings
3	User parameter query
4	User parameter settings
5	Engineering parameter query
6	Engineering parameter settings

Engineering application functions can be operated through the IDU wired controller (XK46 or XK49) or remote controller (YV1L1, fittings selectable).

5.1 Engineering Application Functions Operated through the XK46 Wired Controller

5.1.1 Master IDU Settings

The master IDU can be set through the wired controller or remote controller. The methods for setting the master IDU through the wired controller are as follows:

Method 1:

Step 1: Set an IDU to power-off status.

Step 2: Press and hold the "MODE" button on the wired controller for more than five seconds.

Step 3: Check whether the setting is successful. If it is, "MASTER" on the wired controller will be on. Otherwise, repeat steps 1 and 2.

In power-off status

Press "MODE" for five seconds

"MASTER" is on when the master indoor unit is successfully set.

Method 2:
Step 1: Press and hold the “FUNCTION” button for five seconds in power-on or power-off status to enter the parameter query interface.
Step 2: Press and hold the “FUNCTION” button for five seconds in "C00" status to enter the parameter setting interface.
Step 3: Press “▲” or “▼” to switch level 2 parameter codes till “P10” is displayed on the temperature area.
Step 4: Press the “MODE” button to set the parameter to "01" and then Press the “ENTER” button. If the setting is successful, "MASTER" on the wired controller will be on.

Master IDU Display

① For IDUs connected with wired controllers, "MASTER" on the wired controller connected with the master IDU will be on.
② For IDUs embedded or connected with LED panels, the operation LED on the LED panel of the master IDU will blink three times.

Note: After the master IDU is successfully set, stick the “

” flag to the wired controller or unit panel for convenience of user operation and engineering maintenance. This flag is placed in the package bag of the ODU.

5.1.2 Project number Query and Settings

(1) Project number query of a single IDU

Press and hold the “FUNCTION” button for five seconds in power-on or power-off status to enter the parameter query interface "C00". The timer area of the wired controller displays the project number of the current IDU. Synchronously, the double-eight digital LED of the IDU embedded or connected with an LED panel displays its own project number. If the current wired controller works in one-to-many mode, the timer area displays the IDU that has the minimum project number.

(2) Project number of multiple IDUs

Project number query of IDUs in one-to-many mode: Press and hold the “FUNCTION” button for five seconds in power-on or power-off status to enter the parameter query interface "C00". Press “▽” to switch to “C01”. Press the “MODE” button to enter query. The timer area displays the project numberes of IDUs from small to large. Press “△” or “▽” to switch project numberes. Synchronously, the double-eight digital LED of the IDU embedded or connected with an LED panel displays its own project number.

Note: It is normal if the buzzer of the IDU operated by the wired controller rings. The purpose of ringing the buzzer is to facilitate engineering commissioning personnel to locate the IDU, especially for the IDU without any LED panel because it cannot display its project number.

Project number query of IDUs in the entire communication network: Press and hold the “FUNCTION” button for five seconds in power-on or power-off status to enter the parameter query interface "C00". Press “▽” to switch to “C18”. Press the “MODE” button to enter query. The timer area of each wired controller in the entire network displays the project number of the corresponding IDU. Synchronously, the double-eight digital LED of each IDU embedded or connected with an LED panel displays its own project number.

Method for quitting query:

- Quit the “C18” query interface.
- Press the “ON/OFF” button on any wired controller in the network.

(3) Project number settings of IDU

Press and hold the “FUNCTION” button for five seconds in power-on or power-off status to enter the parameter query interface “C00”. **Continuously press the “MODE” button for three times, and then press and hold the “FUNCTION” button for five seconds** to enter the engineering parameter setting interface. The temperature area displays “P00”. **Press "▽"** to switch to “P42”.

- Single IDU: Press the “MODE” button. The project number blinks in the timer area. Press “△” or “▽” to adjust the project number, and then Press the “ENTER” button to confirm and return to the upper-level menu.
- One-to-many: Press the “MODE” button to enter the IDU selection menu. Press “△” or “▽” to switch IDUs. Press the “MODE” button to set the project number of the current IDU in the same method as above.

5.1.3 User Parameter Query

User parameters can be queried in power-on or power-off status.

(1) Press and hold the “FUNCTION” button for five seconds to enter the user parameter query interface. The temperature area displays “C00” and “View” is on.

(2) Select a parameter code by pressing “⮝” or “⮟”.

(3) Press the “ENTER/CANCEL” button to return to the upper-level menu till quitting parameter query.

The user parameter query list is as follows:

Table 2.1 User Parameter Query List

Parameter Code	Parameter Name	Parameter Range	View Method
C00	Parameter setting ingress	-	Display mode: ● Timer area: displays the project number of the current IDU. Note: If the current HBS network consists of multiple IDUs, only the IDU that has the minimum project number is displayed.
C01	Project number query of IDU and faulty IDU location	1-255: project number of online IDU	Operation method: In “C01” status, press the “MODE” button to enter project number query of IDU. Press “▲” or “▼” to switch the IDU SN. Display mode: Temperature area: displays the fault of the current IDU (in the case of multiple faults, they are circularly displayed every three seconds). Timer area: displays (project number conflict C5 fault)/project number of the current IDU (project numberes are arranged from small to large). Special operations: After users press the “MODE” button to enter project number query, the buzzer of the IDU operated by the wired controller will ring till users quit "C01" query or switch to the next IDU.
C03	Indoor unit quantity query in the system network	1-80	Timer area: displays the number of IDUs in the system network.
C06	Preferential operation query	00: common operation 01: preferential operation	Operation method: In “C06” status, press the “MODE” button to enter the preferential operation query interface. Press “⮝” or “⮟” to switch the IDU SN. Display mode: Temperature area: displays the project number of the current IDU. Timer area: displays the preferential operation setting value of the current IDU.
C07	Indoor environment temperature query	-	Operation method: In “C07” status, press the “MODE” button to enter the indoor environment temperature query interface. Press " ⮝" or "⮟" to switch the IDU SN. Display mode: Temperature area: displays the project number of the current IDU. Timer area: displays the temperature value of the indoor environment temperature sensor after replenishment.
C08	Prompt time query for air filter cleaning	4-416: days	Timer area: displays the prompt time for air filter cleaning.
C09	Wired controller adress query	01, 02	Timer area: displays the adress of the current wired controller.
C11	Indoor unit quantity query in one-to-many mode	1-16	Timer area: displays the number of IDUs controlled by the wired controller.
C12	Outdoor	-	Timer area: displays the temperature value of the

	environment temperature query		environment temperature sensor of the master ODU.
C17	Indoor relative humidity query	20-90	Operation method: In “C17” status, press the “MODE” button to enter the indoor relative humidity query interface. Press “▲” or “▼” to switch the IDU SN. Display mode: Temperature area: displays the relative humidity value. Timer area: displays the project number of IDU (project numberes are arranged from small to large). If the HBS network consists of only one IDU, the timer area directly displays the IDU relative humidity value in the “C17” interface.
C18	Indoor unit project number query in the communication network	1-255	Operation method: In “C18” status, press the “MODE” button to enter the IDU project number query interface. Press “▲” or “▼” to switch the IDU SN. Cancellation method: ① If users quit the "C18" query interface within 20 seconds, the project number display is cancelled. ② If the query interface is quit after 20 seconds upon timeout, press the “ON/OFF” button in power-on or power-off status to cancel the project number display. ③ The method for cancelling the project number display on any wired controller in the network is the same as ②. Display mode: ◆ Temperature area: displays the SN of the current IDU (project numberes are arranged from small to large). ◆ Timer area: displays the project number of the current IDU. Each IDU/wired controller in the network displays its own project number (the wired controller circularly displays project numberes of IDUs every second from small to large).
C20	Fresh-air IDU outlet temperature query	-9 to 99	Operation method: In “C20” status, press the “MODE” button to enter the fresh-air IDU temperature query interface. Press “▲” or “▼” to switch the IDU SN. Display mode: Temperature area: displays the project number of the current IDU (1-16, project numberes are arranged from small to large). Timer area: displays the fresh-air IDU outlet temperature. If the HBS network consists of only one IDU, the timer area directly displays the fresh-air IDU outlet temperature in the "C20" interface.

Note:

In parameter query status, "FAN", “TIMER”, "SLEEP", and "SWING" are invalid. By pressing the “ON/OFF” button, users can return to the main interface but not power on/off the unit.

In parameter query status, signals of the remote controller are invalid.

5.1.4 User Parameter Settings

User parameters can be set in power-on or power-off status.

(1) Press and hold the “FUNCTION” button for five seconds. The temperature area displays “C00”. Press

and hold the “FUNCTION” button for another five seconds to enter the wired controller parameter setting interface. The temperature area displays “P00”.

(2) Select a parameter code by pressing “⮝” or “⮟”. Press the “MODE” button to switch to parameter value settings. The parameter value blinks. Adjust the parameter value by pressing “⮝” or “⮟” and then press the “ENTER/CANCEL” button to complete settings.

(3) Press the “ENTER/CANCEL” button to return to the upper-level menu till quitting parameter settings.

(4) The user parameter setting list is as follows:

Table 2.2 User Parameter Setting List

Parameter Code	Parameter Name	Parameter Range	Default Value	Remark
P10	Master IDU settings	00: does not change the master/slave status of the current IDU 01: sets the current IDU to master IDU	00	After the IDU connected with the current wired controller is successfully set to master IDU, "MASTER" on the wired controller is on.
P11	Infrared connection settings of wired controller	00: disabled 01: enabled	01	This setting can only be enabled through the master wired controller. When the infrared remote receiving function of the wired controller is disabled, neither the master nor slave wired controller can receive remote signals. The wired controllers can only be operated by pressing.
P13	Wired controller address settings	01: master wired controller 02: slave wired controller	01	When two wired controllers simultaneously control one or more IDUs, the two wired controllers should use different addresses. The slave wired controller (address: 02) does not have the unit parameter setting function except its own address settings.
P14	Group-controlled IDU quantity settings	00: disabled 01-16: number of indoor units	01	This value is set based on the number of connected IDUs. If the current value is inconsistent with the actual number of group-controlled IDUs, an “L9” fault may occur.
P30	Static pressure settings for indoor fan	Type 1: 03.04.05.06.07 Type 2: 01.02.03.04.05.06.07.08 .09	05	After identifying the IDU type, the wired controller only displays the available static pressure levels. 1) The static pressure levels fall into five levels and nine levels for VRF IDUs. The wired controller only displays the static pressure levels matched with the identified IDU type. 2) When the HBS network consists of IDUs with both five and nine static pressure levels, the wired controller displays nine adjustable static pressure levels according to the maximum control principle. If the static pressure levels received by the IDU from the wired controller, remote controller, or remote monitoring system exceed the setting range, the limit value prevails. 3)During power-on and synchronization, the setting value of static pressure levels is determined by settings of the IDU.
P31	High-ceiling installation	00: standard-ceiling installation height 01: high-ceiling installation height	00	

P33	Timer function settings	00: common timing 01: time-point timing	00	
P34	Repeating validity for time-point timing	00: single timing 01: repeated everyday	00	This setting is valid only when the timer function is set to time-point timing.
P37	Cooling setting temperature in automatic mode	17°C -30°C	25	Cooling setting temperature – heating setting temperature ≥ 1. Note: The two settings are still valid in remote shielding status.
P38	Heating setting temperature in automatic mode	16°C -29°C	20	
P43	Preferential operation settings	00: common operation 01: preferential operation	00	When power supply is insufficient, users are allowed to power on/off the IDU set with preferential operation and other IDUs are forcibly powered off. A fault code is displayed on the IDU that is forcibly powered off.
P46	Accumulated time clearing for air filter cleaning	00: not cleared 01: cleared	00	

Note:

In parameter setting status, "FAN", “TIMER”, "SLEEP", and "SWING" are invalid. By pressing the “ON/OFF” button, users can return to the main interface but not power on/off the unit.

In parameter setting status, signals of the remote controller are invalid.

5.1.5 Engineering Parameter Query

Engineering parameters can be queried in power-on or power-off status.

Press and hold the “FUNCTION” button for five seconds to enter the engineering parameter query interface. The temperature area displays “C00” and “View” is on.

(1) Within five seconds after “C00” is displayed, continuously press the “MODE” button for three times in an interval less than one second to enter engineering parameter query.

(2) Select a parameter code by pressing “⮝” or “⮟”.

(3) Press the “ENTER/CANCEL” button to return to the upper-level menu till quitting parameter query.

In the engineering parameter query interface, users can also query user parameters listed in Table 3.1.
The engineering parameter query list is as follows:

Table 2.3 Engineering Parameter Query List

Parameter Code	Parameter Name	Parameter Range	View Method
C00	Parameter setting ingress (default)	-	Display mode: Timer area: displays the project number of the current IDU. Note: If the current HBS network consists of multiple IDUs, only the IDU that has the minimum project number is displayed.
C02	Indoor unit capacity query	-	Operation method: In “C02” status, press the “MODE” button to enter the preferential operation query interface. Press "⮝" or "⮟" to switch the project number of IDU. Display mode: Temperature area: displays the project number of the current IDU. Timer area: displays the current IDU capacity/IDU capacity after adjustment.
C04	Project number	1-255: project	Timer area: displays the project number of the master IDU/00.

Parameter Code	Parameter Name	Parameter Range	View Method
	query of master IDU	number 00: no master IDU	
C05	Historical fault query ingress of IDU	Five historical faults	Operation method: 1. In “C05” status, press the “MODE” button to enter the historical fault query interface. Press "⮝" or "⮟" to switch the project number of IDU. Press the “MODE” button to enter fault code query of the current IDU. Press “⮝” or “⮟” to switch the fault SN. Press the “ENTER/CANCEL” button to return to the upper-level menu. Display mode: Temperature area: displays the fault SN and fault code. Timer area: displays the project number of IDU.
C10	Static pressure setting query of ODU	00: 0 Pa 20: 20 Pa 50: 50 Pa 82: 82 Pa	Operation method: In “C10” status, press the “MODE” button to enter static pressure setting query of ODU. Press "⮝" or "⮟" to switch the ODU address. Display mode: Temperature area: displays the address of the current ODU. Timer area: displays the static pressure setting value.
C13	Outdoor unit network number query	1-255	Timer area: displays the network number of the current ODU.
C14	Temperature query for inlet-tube temperature sensor of IDU	-9 to 99	Operation method: In “C14” status, press the “MODE” button to enter inlet-tube temperature sensor query of IDU. Press "⮝" or "⮟" to switch the IDU SN. Display mode: Temperature area: displays the project number of the current IDU. Timer area: displays the temperature value. If the HBS network consists of only one IDU, the timer area directly displays the temperature value in the “C14” interface. No matter Fahrenheit or Centigrade remote signals are received, the temperature is displayed in Centigrade. When the wired controller displays the inlet-tube temperature after receiving signals from the remote controller, the inlet-tube temperature of the IDU that has the minimum project number in the HBS network is displayed by default.

Parameter Code	Parameter Name	Parameter Range	View Method
C15	Temperature query for outlet temperature sensor of IDU	-9 to 99	Operation method: In “C15” status, press the “MODE” button to enter outlet temperature sensor query of IDU. Press "⮝" or "⮟" to switch the IDU SN. Display mode: Temperature area: displays the project number of the current IDU. Timer area: displays the temperature value. If the HBS network consists of only one IDU, the timer area directly displays the temperature value in the "C14" interface. No matter Fahrenheit or Centigrade remote signals are received, the temperature is displayed in Centigrade. When the wired controller displays the inlet-tube temperature after receiving signals from the remote controller, the inlet-tube temperature of the IDU that has the minimum project number in the HBS network is displayed by default.
C16	Opening degrees query of electronic expansion valve of IDU	0-20	Operation method: In “C16” status, press the “MODE” button to enter electronic expansion valve opening degree query of IDU. Press "⮝" or "⮟" to switch the IDU SN. Display mode: Temperature area: displays the project number of the current IDU. Timer area: displays the opening degree value. If the HBS network consists of only one IDU, the timer area directly displays the opening degree value of electronic expansion valve in the “C16” interface. When the wired controller displays the opening degree of electronic expansion valve after receiving signals from the remote controller, the opening degree of electronic expansion valve of the IDU that has the minimum project number in the HBS network is displayed by default.
n2	Capacity configuration ratio upper-limit of outdoor/IDU	35: 135% 50: 150%	Temperature area: displays the parameter code. Timer area: displays the setting value of capacity configuration ratio of the current outdoor/IDU.
n6	Historical fault query ingress of ODU	Five historical faults	Operation method: In “n6” status, press the “MODE” button to enter fault code query of ODU (when a wired controller controls multiple IDUs, only the faults memorized by the IDU that has the minimum project number can be queried). Press “⮝” or “⮟” to switch the fault SN. Press the “ENTER/CANCEL” button to return to the upper-level menu. Display mode: Temperature area: displays the fault SN and fault code from left to right (1-5, faults are arranged from the earliest to the latest). Timer area: displays the project number of the ODU.
n7	Parameter query ingress of ODU	01-13 25-29	Operation method (n7 query is not supported for the slave wired controller): In “n7” status, the timer area is not displayed. Press the “MODE” button to enter parameter query of ODU. The first bit in the temperature area (display bit of the ODU module ID) blinks. Press “▲” or “▼” to switch the ODU module ID. Press the “MODE” button to select an ODU module. In this case, the first

<table>
<tr><th>Parameter Code</th><th>Parameter Name</th><th>Parameter Range</th><th>View Method</th></tr>
<tr><td></td><td></td><td></td><td>bit in the temperature area stops blinking, and the second and third bits in the temperature area display the parameter code. The timer area displays a corresponding parameter value.
Press “▲” or “▼” to switch the parameter code and press the “ENTER/CANCEL” button to return to the upper-level menu.
Display mode:
Temperature area: displays the ODU module ID and parameter code from left to right.
Timer area: displays a corresponding parameter value to the right.
<table>
<tr><th>Parameter Code</th><th>Parameter Name</th><th>Unit</th></tr>
<tr><td>01</td><td>Outdoor environment temperature</td><td>°C</td></tr>
<tr><td>02</td><td>Operation frequency of compressor 1</td><td>Hz</td></tr>
<tr><td>03</td><td>Operation frequency of compressor 2</td><td>Hz</td></tr>
<tr><td>04</td><td>Operation frequency of outdoor fan</td><td>Hz</td></tr>
<tr><td>05</td><td>Module high-pressure</td><td>°C</td></tr>
<tr><td>06</td><td>Module low-pressure</td><td>°C</td></tr>
<tr><td>07</td><td>Discharge temperature of compressor 1</td><td>°C</td></tr>
<tr><td>08</td><td>Discharge temperature of compressor 2</td><td>°C</td></tr>
<tr><td>09</td><td>Discharge temperature of compressor 3</td><td>°C</td></tr>
<tr><td>10</td><td>Discharge temperature of compressor 4</td><td>°C</td></tr>
<tr><td>11</td><td>Discharge temperature of compressor 5</td><td>°C</td></tr>
<tr><td>12</td><td>Discharge temperature of compressor 6</td><td>°C</td></tr>
<tr><td>13</td><td>Operation frequency of compressor 3</td><td>Hz</td></tr>
<tr><td>25</td><td>Outdoor unit heating EXV1 (Actual value = Displayed value * 10)</td><td>PLS</td></tr>
<tr><td>26</td><td>Outdoor unit heating EXV2 (Actual value = Displayed value * 10)</td><td>PLS</td></tr>
<tr><td>27</td><td>Subcooler EXV (Actual value = Displayed value * 10)</td><td>PLS</td></tr>
<tr><td>28</td><td>Defrosting temperature</td><td>°C</td></tr>
<tr><td>29</td><td>Liquid-extracting temperature of subcooler</td><td>°C</td></tr>
<tr><td>30</td><td>Outlet temperature of accumulator</td><td>°C</td></tr>
<tr><td>31</td><td>Oil return temperature</td><td>°C</td></tr>
<tr><td>32</td><td>Inlet-tube temperature of condenser</td><td>°C</td></tr>
<tr><td>33</td><td>Outlet temperature of condenser</td><td>°C</td></tr>
</table></td></tr>
<tr><td>A6</td><td>Unit cooling/heating function</td><td>nA: cooling/heating
nC: single-cooling
nH: single-heating
nF: air supply</td><td>Temperature area: displays the parameter code.
Timer area: displays the cooling/heating function setting value of the current unit.</td></tr>
<tr><td>nb</td><td>Bar code query of IDU</td><td>0-9, A-Z, a-z, -</td><td>Operation method (nb query is not supported for the slave wired controller):</td></tr>
</table>

<table>
<tr><th>Parameter Code</th><th>Parameter Name</th><th>Parameter Range</th><th>View Method</th></tr>
<tr><td></td><td></td><td></td><td>
In “nb” status, the timer area is not displayed. Press the “MODE” button to enter bar code query. The temperature area displays “nb” and the project number in the timer area blinks. Press “▲” or “▼” to switch the project number of IDU.
Press the “MODE” button to select an IDU. The temperature area displays “Un” and the timer area displays “-n”. Press “▲” or “▼” to display the entire-unit bar code and controller bar code of IDU. Press the “ENTER/CANCEL” button to return to the upper-level menu. The temperature area displays “nb” and the timer area displays the project number of the queried IDU. Press the “ENTER/CANCEL” button again to return to the upper-level menu.
Display mode:
Temperature area: displays nb/Un/Pc/bar code.
Timer area: displays -n/project number/bar code.
The following is an example:
<table>
<tr><th>Example</th><th>Temperature Area</th><th>Timer Area</th><th>Remark 1</th><th>Remark 2</th></tr>
<tr><td rowspan="3">Entire-init bar code of IDU N1r0128150066</td><td>Un (to the right)</td><td>-n (in the middle)</td><td>It indicates that the following is the entire-unit bar code of IDU.</td><td rowspan="6">Press “▼” to display downward and press “▲” to display upward.</td></tr>
<tr><td>N1r</td><td>0128</td><td>It indicates the former seven bits of the bar code.</td></tr>
<tr><td>150</td><td>066</td><td>It indicates the latter six bits of the bar code.</td></tr>
<tr><td rowspan="3">Controller bar code of IDU N1r0128150067</td><td>Pc</td><td>-n</td><td>It indicates that the following is the controller bar code of IDU.</td></tr>
<tr><td>N1r</td><td>0128</td><td>It indicates the former seven bits of the bar code.</td></tr>
<tr><td>150</td><td>067</td><td>It indicates the latter six bits of the bar code.</td></tr>
</table>
Note:
1. Un indicates the entire-unit bar code of IDU and Pc indicates the controller bar code of IDU.
2. When there is only one IDU, press the “MODE” button in “nb” status to enter bar code query without selecting the project number of IDU.
3. The system quits the query status if no operations are performed in 60 seconds.
4. The bar code query starts from the entire-unit bar code of IDU and ends at the controller bar code of IDU without circulation. That is, the query does not start again even if users press “▼”.
</td></tr>
</table>

Note:
In parameter query status, "FAN", “TIMER”, "SLEEP", and "SWING" are invalid. By pressing the “ON/OFF” button, users can return to the main interface but not power on/off the unit.

In parameter query status, signals of the remote controller are invalid.

5.1.6 Engineering Parameter Settings

Engineering parameters can be set in power-on or power-off status.

(1) Press and hold the “FUNCTION” button for five seconds. The temperature area displays “C00”. **Continuously press the “MODE” button for three times, and then press and hold the “FUNCTION” button for five seconds** to enter the engineering parameter setting interface. The temperature area displays “P00”.

(2) Select a parameter code by pressing “⮝” or “⮟”. Press the “MODE” button to switch to parameter value settings. The parameter value blinks. Adjust the parameter value by pressing “⮝” or “⮟” and then press the “ENTER/CANCEL” button to complete settings.

(3) Press the “ENTER/CANCEL” button to return to the upper-level menu till quitting parameter settings.

In the engineering parameter setting interface, users can also set user parameters listed in Table 3.2.

The engineering parameter setting list is as follows:

Table 2.4 Engineering Parameter Setting List

Parameter Code	Parameter Name	Parameter Range	Default Value	Remark
P15	Power-down memory mode	00: standby after power-down recovery 01: restoring the original status after power-down recovery	00	--
P17	Historical fault clearing for IDU	00: not cleared 01: cleared	00	Historical faults of all IDUs controlled by the current wired controller are cleared.
P20	Environment temperature sensor settings for IDU	01: temperature sensor of air return vent 02: temperature sensor of wired controller 03: temperature sensor of air return vent for cooling, dehumidifying, and air supply; temperature sensor of wired controller for heating 04: temperature sensor of wired controller for cooling, dehumidifying, and air supply; temperature sensor of air return vent for heating	03	When there are master and slave wired controllers and the temperature sensor of wired controller is used, only the temperature sensor of the master wired controller is used by default. Note: 1) In automatic mode, the environment temperature sensor settings are invalid for a common IDU but the setting value is memorized. 2)The environment temperature sensor settings are invalid for a fresh-air IDU. The temperature sensor of air return vent is used by default.
P21	Corrected value of environment temperature sensor of IDU (for cooling, dehumidifying, and air supply)	-15 to +15	Temperature sensor of unit: 0°C; temperature sensor of wired controller: 0°C	Press “⮝” or “⮟” to add or reduce by 1°C.
P22	Corrected value of environment temperature sensor of IDU (for heating, fast heating, and air warming)	-15 to +15	Temperature sensor of unit: -2°C; temperature sensor of wired controller: 0°C	Press ”⮝” or ”⮟” to add or reduce by 1°C. The temperature sensor of unit and the temperature sensor of wired controller share the same corrected value. In heating mode, corrected value of temperature sensor of unit = corrected value of temperature sensor of wired controller - 2°C.
P32	Capacity adjustment	-40% to +40%	00	Press "⮝" or "⮟" to add or reduce by 10%.

Parameter Code	Parameter Name	Parameter Range	Default Value	Remark
	function of IDU			
P35	Factory setting recovery for user functions	00: invalid 01: valid	00	Select "01" and then press and hold the “ENTER/CANCEL” button to restore the factory settings for user functions (factory setting recovery fails if remote shielding is valid).
P36	Factory setting recovery for engineering settings	00: invalid 01: valid	00	Select "01" and then press and hold the “ENTER/CANCEL” button to restore the factory status for engineering settings (factory setting recovery fails if remote shielding is valid).
P40	Prevention for heat collection	00: disabled 10: 10 seconds 20: 20 seconds 30: 30 seconds 40: 40 seconds 50: 50 seconds 60: 60 seconds	00	It indicates the number of seconds for enabling the low-level fan every 15 minutes.
P42	Project number settings of IDU	1-255	Automatically generated upon the initial system operation	In “P42” status, press the “MODE” button to enter the setting menu. The project number blinks in the timer area. Press “⮝” or “⮟” to adjust the project number. Press the “ENTER/CANCEL” button to confirm settings and return to the upper-level menu.
P45	One-key project number reset for IDU	00: invalid 01: valid	00	When it is set to "01", the wired controller initiates an IDU project number reset command.
P48	Minimum opening degree setting for heating breakdown of IDU expansion valves	00: automatically controlled 1-500	--	After the default minimum opening degree for heating breakdown is manually modified, the opening degree remains unchanged upon heating breakdown.
P50	Target outlet temperature setting for fresh-air IDU in cooling mode	16-30°C	--	**Operation method:** Enter query in “P50” status and press “▲” or “▼” to set the target outlet temperature of fresh-air IDU. The default value is 18°C upon factory departure. Press the “ENTER/CANCEL” button to confirm settings and return to the upper-level menu. **Display mode:** Temperature area: displays the target outlet temperature of fresh-air IDU.
P51	Target outlet temperature setting for fresh-air IDU in heating mode	16-30°C		**Operation method:** Enter query in “P51” status and press “▲” or “▼” to set the target outlet temperature of fresh-air IDU. The default value is 22°C upon

Parameter Code	Parameter Name	Parameter Range	Default Value	Remark
				factory departure. Press the “ENTER/CANCEL” button to confirm settings and return to the upper-level menu. **Display mode:** Temperature area: displays the target outlet temperature of fresh-air IDU.
P56	The setting for AHU-KIT indoor unit reach the temperature in heating code, Defrosting in heating code, oil return in heating code	00: indoor fan stop 01: indoor fan keep operate	-	When set "00", the same control with normal GMV indoor unit, the indoor fan will stop; when set "01",the indoor fan keep operate. Note: This setting only aim to AHU-KIT indoor unit.
P54	Linked settings for fresh-air IDU	00: no linked control (default) 01: linked control	-	There is not linked control by default upon factory departure. After the linked control function is set, the fresh-air IDU can be independently controlled.
n0	System conservation operation settings	00: comfortability preferred 01: conservation preferred	00	
n1	Defrosting period settings	40: 40 minutes 50: 50 minutes 60: 60 minutes	50	
n3	Forcible defrosting	00: common 01: forcible defrosting	-	After settings, it automatically restores to "00".
n4	Highest capacity output limitation settings for ODU	08: 80% 09: 90% 10: 100%	10	Enter query in “n4” status. The temperature area displays the function code and the timer area displays the corresponding function setting value.
A7	Silent function of ODU	00: no silent function 01-09: intelligent nighttime silent mode 10-12: forcible silent mode	00	Enter query in “A7" status. The temperature area displays the function code and the timer area displays the corresponding function setting value.

Note:

In parameter setting status, "FAN", “TIMER”, "SLEEP", and "SWING" are invalid. By pressing the “ON/OFF” button, users can return to the main interface but not power on/off the unit.

In parameter setting status, signals of the remote controller are invalid.

5.1.7 Failure Display

When a fault occurs during the system operation, the temperature area of wired controller displays the fault code. When multiple faults occur, fault codes are circularly displayed.

❖ When a fault occurs, power off the unit and ask for professional maintenance personnel for help.

The following figure shows the power-on high-pressure protection fault interface.

Power-on High-pressure Protection Fault Interface

Note: If the IDU connected with the current wired controller is a fresh-air IDU, "FAP" is displayed on the main interface of the wired controller. Only the outlet temperature can be set for the fresh-air IDU. For the setting method, see the "IDU Function Settings" section.

5.2 Engineering Application Functions Operated through the XK49 Wired Controller

XK49 Wired Controller

5.2.1 Master IDU Settings

Method 1: In power-off status, press and hold the "MODE" button for five seconds to set the IDU connected with the current wired controller to master IDU. If the setting is successful, "MASTER" will be

on.
Method 2:
Step 1: In power-on or power-off status, press and hold the “MODE” button and "SWING" simultaneously for five seconds to enter the parameter query interface.
Step 2: In "C00" status, press and hold the “MODE” button and "SWING" simultaneously for five seconds to enter the parameter setting interface.
Step 3: Press "▲" or "▼" to switch level 2 parameter codes till “P10” is displayed on the temperature area.
Step 4: Press the “MODE” button to set the parameter to "01" and then Press the “ENTER” button. If the setting is successful, "MASTER" on the wired controller will be on.

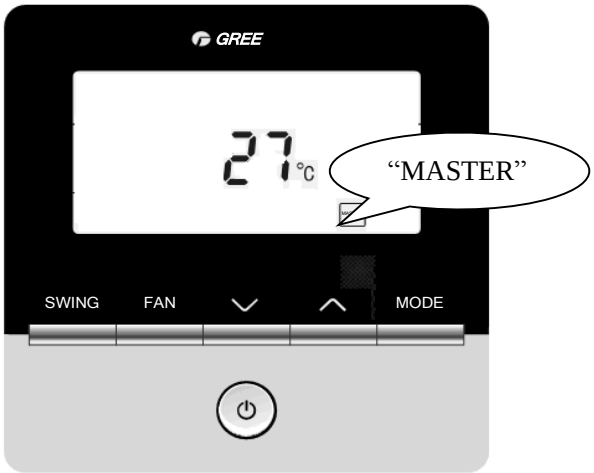

5.2.2 User Parameter Query
User parameters can be queried in power-on or power-off status.

(1) Press and hold the “MODE” button and "SWING" simultaneously for five seconds to enter the user parameter query interface. The temperature area displays “C00” and “View ” is on.

(2) Select a parameter code by pressing “∨” or “∧”.

(3) Press the “SWING” button to return to the upper-level menu till quitting parameter query.

(4) For the user parameter query list of the XK49 wired controller, refer to the user parameter query list in XK46 user parameter query.

Note: In parameter query, the function of "SWING" on the XK49 wired controller is equivalent to the function of “ENTER/CANCEL” on the XK46 wired controller.

5.2.3 User Parameter Settings
User parameters can be set in power-on or power-off status.

(1) Press and hold the “MODE” button and "SWING" simultaneously for five seconds. The temperature area displays “C00”. Press and hold the “MODE” button and "SWING" simultaneously for another five seconds to enter the wired controller user parameter setting interface. The temperature area displays “P00”.

(2) Select a parameter code by pressing “∨” or “∧”. Press the “MODE” button to switch to parameter value settings. The parameter value blinks. Adjust the parameter value by pressing “∨” or “∧” and then press the “SWING” button to complete settings.

(3) Press the “SWING” button to return to the upper-level menu till quitting parameter settings.

(4) For the user parameter setting list of the XK49 wired controller, refer to the user setting query list in XK46 user parameter settings.

(5) Note: In parameter settings, the function of "SWING" on the XK49 wired controller is equivalent to the function of “ENTER/CANCEL” on the XK46 wired controller.

5.2.4Engineering Parameter Query

Engineering parameters can be queried in power-on or power-off status.

(1) Press and hold the “MODE” and "SWING" button simultaneously for five seconds to enter the engineering parameter query interface. The temperature area displays “C00” and “VIEW” is on.

(2) In "C00" status, continuously press the “MODE” button for three times to enter engineering parameter query.

(3) Select a parameter code by pressing “∨” or “∧”.

(4) Press the “SWING” button to return to the upper-level menu till quitting parameter query.

(5) For the engineering parameter query list of the XK49 wired controller, refer to the engineering parameter query list in XK46 engineering parameter query.

(6) Note: In parameter query, the function of "SWING" on the XK49 wired controller is equivalent to the function of “ENTER/CANCEL” on the XK46 wired controller.

5.2.5 Engineering Parameter Settings

Engineering parameters can be set in power-on or power-off status.

(1) Press and hold the “MODE” and "SWING" button simultaneously for five seconds. The temperature area displays “C00”. Continuously press the “MODE” button for three times, and then press and hold the “MODE” button and "SWING" simultaneously for another five seconds to enter the wired controller engineering parameter setting interface. The temperature area displays “P00”.

(2) Select a parameter code by pressing “∨” or “∧”. Press the “MODE” button to switch to parameter value settings. The parameter value blinks. Adjust the parameter value by pressing “∨” or “∧” and then press the “SWING” button to complete settings.

(3) Press the “SWING” button to return to the upper-level menu till quitting parameter settings.

For the engineering parameter setting list of the XK49 wired controller, refer to the engineering setting query list in **XK46 engineering parameter settings**.

Note: In parameter settings, the function of "SWING" on the XK49 wired controller is equivalent to the function of “ENTER/CANCEL” on the XK46 wired controller.

5.3 Engineering Application Functions Operated through the YV1L1 Remote Controller

The YV1L1 remote controller provides all engineering application functions. It is set to common type by default upon factory departure. It can use engineering application functions only after being set to professional type. **The following only describes engineering application functions. For other user operation functions, refer to the "*Remote Controller Operating Instructions*".**

Method for setting the professional remote controller: Press "MODE" and "TEMP" simultaneously in power-off status. If " " blinks for three times, it indicates that the setting succeeds.

Method for restoring the common remote controller: Press "MODE" and "TEMP" simultaneously in power-off status. If " " blinks for three times, it indicates that the setting succeeds.

No.	Button name	Function
1	ON/OFF	Turn on or turn off the unit
2	FAN	Set fan speed
3	▲/▼	Set temperature and time
4	MODE	Set operation mode
5		Set quiet function
6		Set health function and air function
7		Set left & right swing status
8		Set up & down swing status
9	X-FAN	Set X-FAN function
10	TIMER ON	Set timer on function
11	TIMER OFF	Set timer off function
12	SAVE	Set energy-saving function
13	SLEEP	Set sleep function
14	LIGHT	Set light function
15	CLOCK	Set clock of the system
16	I FEEL	Set I FEEL function
17	TEMP	Switch temperature displaying type on the unit’s display

5.3.1 Master IDU Settings

The master IDU can be set through the wired controller or remote controller. The methods for setting the master IDU through the remote controller are as follows:

Step 1: Set an IDU to air-supply status and set the temperature to 30°C.

Step 2: Continuously press “—” and “+” for three times within five seconds.

Step 3: Check whether the setting is successful. If it is, the LED panel of the IDU will display "UC" for five seconds and "MASTER" on the wired controller will be on. Otherwise, repeat steps 1 and 2.

5.3.2 Parameter Query

Engineering application functions cover parameter query and parameter settings.

For parameter query, users can query user parameters and engineering parameters of the unit. The parameter query method is as follows:

1) On the professional remote controller of YV1L1, press and hold " CLOCK " for five seconds to enter the parameter query status. The viewing text is displayed. The query code "C00" blinks in the temperature area.

2) Press " ▲ ▼ " to switch the query code and select a unit parameter to be queried (see Table 2.5 for parameters that can be queried).

3) If the timer area displays query sub-items, it indicates that there are level 2 query menus. Press " MODE " to enter level 2 query menu selection. The content blinks in the timer area. Press " ▲ ▼ " to switch query sub-items and select a level 2 menu to be queried.

4) Press " TEMP " to confirm query and return to step 2.

After entering the engineering application function, the system automatically quits the engineering commissioning status if no valid operations are performed within 20 seconds. To directly quit the engineering commissioning status, press " CLOCK ".

Table 2.5 Query Parameters

Query Code	Query Content	Query Sub-item	Level 2 Query Content
C00	Invalid		
C01	Project number query of the current IDU		
C02	Capacity query of the current IDU		
C03	Indoor unit quantity query in the CAN1 network		
C04	Project number query of the master IDU		
C05	Historical fault query ingress of the current IDU	01	Fault 1
		02	Fault 2
		03	Fault 3
		04	Fault 4
		05	Fault 5
C06	Preferential operation query		
C07	Temperature query for environment temperature sensor of the current IDU		

C08	Prompt time query for air filter cleaning		
C10	Static pressure setting query of ODU	01	Module 1
		02	Module 2
		03	Module 3
		04	Module 4
C11	Indoor unit quantity query in one-to-many control mode		
C12	Temperature query for outdoor environment temperature sensor		
C13	CAN2 bus line ID query		
C14	Inlet-tube temperature query of IDU		
C15	Outlet temperature query of IDU		
C16	Opening degrees query of electronic expansion valve of IDU		
n2	Capacity configuration ratio upper-limit query of outdoor and IDUs		
n4	Highest capacity output limitation query		
n6	Historical fault query ingress of ODU	01	Fault 1
		02	Fault 2
		03	Fault 3
		04	Fault 4
		05	Fault 5
A6	Unit cooling/heating function		
A7	Outdoor silent mode		

5.3.3 Parameter Settings

For parameter settings, users can set user parameters and engineering parameters of the unit. The parameter setting method is as follows:

1) After entering parameter query, switch the query code to "C00". Press and hold "CLOCK" for five seconds to enter the parameter setting status. The setting text is displayed and "P00" blinks in the temperature area.

2) Press "▲ ▼" to switch the setting code and select a unit parameter to be set (see Table 2.6 for parameters that can be set).

3) Press "TEMP" to enter parameter settings. The current parameter value blinks in the timer area. Press "▲ ▼" to change the parameter value.

4) Press "TEMP" to confirm query and return to step 2.

After entering engineering commissioning, the system automatically quits the engineering commissioning status if no valid operations are performed within 20 seconds. To directly quit the engineering commissioning status, press "CLOCK".

Table 2.6 Setting Parameters

Setting Code	Setting Content	Setting Value
P00	Invalid	--
P10	Master IDU settings	00: not changing the current settings 01: setting the corresponding IDU to master IDU 001-255: setting the IDU corresponding to *** to master IDU
P15	Power-down memory mode settings	00: standby after power-down recovery 01: restoring the original status after power-down recovery

Setting Code	Setting Content	Setting Value
P17	Historical fault clearing	00: not cleared 01: cleared
P20	Indoor environment temperature value	01: temperature sensor of air return vent 02: temperature sensor of wired controller 03: temperature sensor of air return vent for cooling, dehumidifying, and air supply; temperature sensor of wired controller for heating 04: temperature sensor of wired controller for cooling, dehumidifying, and air supply; temperature sensor of air return vent for heating and automatic mode
P21	Corrected value settings of environment temperature sensor of IDU (for cooling, dehumidifying, and air supply)	-15 to 15
P22	Corrected value settings of environment temperature sensor of IDU (for heating)	-15 to 15
P30	Static pressure settings for indoor fan	Type 1: 03.04.05.06.07 Type 2: 01.02.03.04.05.06.07.08.09
P31	High-ceiling installation settings	00: standard-ceiling installation height 01: high-ceiling installation height
P32	Capacity adjustment function of IDU	-40% to +40%
P34	Repeating validity for time-point timing	00: invalid 01: valid
P35	Factory setting recovery for user functions	00: invalid 01: factory setting recovery
P36	Factory setting recovery for engineering settings	00: invalid 01: factory setting recovery
P40	Prevention for heat collection	00: disabled 10: 10 seconds 20: 20 seconds 30: 30 seconds 40: 40 seconds 50: 50 seconds 60: 60 seconds
P42	Project number settings of IDU	1-255
P43	Preferential operation settings	00: no preferential operation 01: preferential operation
P44	One-key project number setting query for IDU	00: not displayed 01: displayed
P45	One-key project number reset for IDU	00: invalid 01: project number reset
P46	Accumulated time clearing for air filter cleaning	00: not cleared 01: cleared
P47	Prompt settings for air filter cleaning	00: no cleaning prompt settings 10-39: The first digit indicates the pollution degree of the using place and the second digit indicates the accumulated operating time of IDU. The two digits are described as follows: ① Slight pollution: The first digit is "1". If the second digit is "0", it indicates that the accumulated operating time is 5500 hours. The accumulated operating time is added by 500 hours when the second digit is increased by "1”. When the second digit is “9”, the accumulated operating time is 10000 hours. ② Medium pollution: The first digit is "2". If the second digit is "0", it indicates that the accumulated operating time is 1400 hours. The accumulated operating time is added by 400 hours when the second digit is increased by "1". When the second digit is "9", the accumulated operating time is 5000 hours.

Setting Code	Setting Content	Setting Value
		③ Heavy pollution: The first digit is "3". If the second digit is "0", it indicates that the accumulated operating time is 100 hours. The accumulated operating time is added by 100 hours when the second digit is increased by "1". When the second digit is "9", the accumulated operating time is 1000 hours.
n0	System conservation operation settings	00: comfortability preferred 01: conservation preferred
n1	Defrosting period settings	40: 40 minutes 50: 50 minutes 60: 60 minutes
n3	Forcible defrosting	00: no defrosting 01: forcible defrosting
A7	Silent function of ODU	00: no silent function 01-09: intelligent nighttime silent mode 10-12: forcible silent mode
n4	Highest capacity output limitation settings	08: highest energy consumption limitation being 80% 09: highest energy consumption limitation being 90% 10: no conservation limitation

5.4 Engineering Application Functions Operated through the YAP1F Remote Controller

The YAP1F remote controller only provides engineering application functions for setting the master IDU. For other user operation functions, refer to the "*Remote Controller Operating Instructions*".

The method for setting the master IDU through the YAP1F remote controller is as follows:

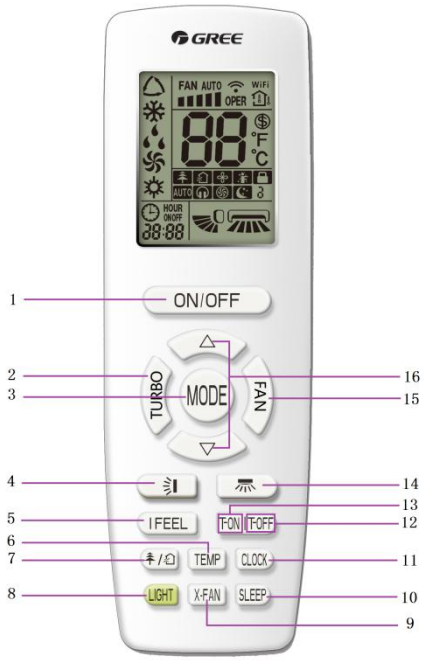

No.	Button name	Function
1	ON/OFF	Turn on or turn off the unit
2	TURBO	Set turbo function
3	MODE	Set operation mode
4		Set up&down swing status
5	I FEEL	Set I FEEL function
6	TEMP	Switch temperature displaying type on the unit’s display
7		Set health function and air function

8	LIGHT	Set light function
9	X-FAN	Set X-FAN function
10	SLEEP	Set sleep function
11	CLOCK	Set clock of the system
12	TOFF	Set timer off function
13	TON	Set timer on function
14		Set left&right swing status
15	FAN	Set fan speed
16	△/▽	Set temperature and time

(For details about the above figures, refer to the instructions 66174100016.)
Perform settings by pressing "▲" and "▼" in air supply mode:

①. Set the temperature to 30°C.

③ . Press "▼" and then "▲" in five seconds. Repeat this operation for three times.

After successful settings, "UC" is displayed on the receiving indicator panel of the remote controller for five seconds and"MASTER" is displayed on the wired controller.

INSTALLATION

1 Engineering Installation Preparation and Notice

1.1 Installation notice

Personnel and property safety are highly concerned during the entire installation process. Installation implementation must abide by relevant national safety regulations to ensure personnel and property safety.

All personnel involved in the installation must attend safety education courses and pass corresponding safety examinations before installation. Only qualified personnel can attend the installation. Relevant personnel must be held responsible for any violation of the regulation.

1.2 Installation key points and importance

VRF air conditioning systems use refrigerant, instead of other agent, to directly evaporate to carry out the system heat. High level of pipe cleanness and dryness is required in the system. Since various pipes need to be prepared and laid out onsite, carelessness or maloperation during installation may leave impurities, water, or dust inside refrigerant pipes. If the design fails to meet the requirement, various problems may occur in the system or even lead to system breakdown.

Problems that usually occur during installation are as follows:

No.	Installation Problem	Possible Consequence
1	Dust or impurities enter into the refrigeration system.	Pipes are more likely to be blocked; air conditioning performance is reduced; compressor wear is increased or even hinder the normal operation of the system and burn the compressor.
2	Nitrogen is not filled into the refrigerant pipe or insufficient Nitrogen is filled before welding.	Pipes are more likely to be blocked; air conditioning performance is reduced; compressor wear is increased or even hinder the normal operation of the system and burn the compressor.
3	The vacuum degree in the refrigerant pipe is insufficient.	The refrigeration performance is reduced. The system fails to keep normal operation due to frequent protection measures. When the problem getting serious, compressor and other major components can be damaged.
4	Water enters into the refrigeration system.	Copper plating may appear on the compressor and reduce the compressor efficiency with abnormal noise generated; failures may occur in the system due to ice plug.
5	The refrigerant pipe specifications do not meet the configuration requirements.	Smaller configuration specifications can increase the system pipe resistance and affect the cooling performance; larger configuration specifications are waste of materials and can also reduce the cooling performance.
6	Refrigerant pipe is blocked.	The cooling performance is reduced; in certain cases, it may cause long-term compressor operating under overheat conditions; the lubricating effect can be affected and the compressor may be burnt if impurities were mixed with the lubricating oil.
7	Refrigerant pipe exceeds the limit.	The loss in pipe is considerable and the unit energy efficiency decreases, which are harmful for long-term running of the system.
8	Incorrect amount of refrigerant is filled.	The system cannot correctly control the flow allocation; the compressor may be operating under over-heating environment or running when the refrigerant flows back to the compressor.
9	The refrigerant pipe leaks.	Insufficient refrigerant circulating in the system decreases the cooling performance of the air conditioner. Long-term operation under such circumstance may cause an overheating compressor or even damage the compressor.
10	Water drainage from the condensate water pipe is not smooth.	Residual water in IDUs can affect the normal operation of the system. The possible water leakage can damage the IDU's decoration.
11	The ratio of slop for condensate water pipe is insufficient or the condensate	Reverse slop or inconsistent connection of condensate water pipe can hinder the smooth drainage and cause leakage of the IDU.

No.	Installation Problem	Possible Consequence
	water pipe is incorrectly connected.	
12	The air channel is improperly fixed.	The air channel will deform; vibration and noise occur during unit operating.
13	The guide vane of air channel is not reasonably manufactured.	Uneven air quantity allocation reduces the overall performance of the air conditioner.
14	The refrigerant pipe or condensate water pipe does not meet the insulation requirement.	Water can easily condensate and drip to damage the indoor decoration, or even trigger the protection mode of system due to overheating operation.
15	The installation space for IDU is insufficient.	Since there is a lack of space for maintenance and checking, indoor decoration might need to be damaged during such operation.
16	The IDU or the location of the air outlet or return air inlet is not designed reasonably.	The air outlet or return air inlet may be short-circuited, thus affecting the air conditioning performance.
17	The ODU is improperly installed.	The ODU is difficult to be maintained; unit exhaust is not smooth, which reduces the heat exchanging performance or even prevent the system from normal operation; in addition, the cold and hot air for heat exchange and the noise may annoy people in surrounding areas.
18	Power cables are incorrectly provided.	Unit components may be damaged and potential safety hazard may occur.
19	Control communication cables are incorrectly provided or improperly connected.	The normal communication in the system fails or the control over IDUs and ODUs turn in a mess.
20	Control communication cables are not properly protected.	The communication cables are short-circuited or disconnected, and the unit cannot be started up due to communication failure.

Understand the special requirement (if any) for unit installation before implementation to ensure installation quality. Relevant installers must have corresponding engineering construction qualifications.

Special type operators involved in the engineering implementation, such as welders, electricians, and refrigeration mechanics must have relevant operating licenses and are accredited with vocational qualification certification.

2 Installation Materials Selection

The materials, equipment and instruments used during air conditioning engineering construction must have certifications and test reports. Products with fireproof requirements must be provided with fireproof inspection certificates and must meet national and relevant compulsory standards. If environmentally-friendly materials are to be used as required by customers, all such materials must meet national environmental protection requirement and be provided with relevant certificates.

2.1 Refrigerant piping

a. Material requirement: Dephosphorization drawing copper pipe for air conditioners;

b. Appearance requirement: The inner and outer surface of pipe should be smooth without pinhole, crack, peeling, blister, inclusion, copper powder, carbon deposition, rust, dirt or severe oxide film, and without obvious scratch, pit, spot and other defects.

c. Test report: Certifications and quality test reports must be provided.

d. The tensile strength must be at least 240 kgf/mm².

e. Specifications requirement

R410A Refrigerant System		
OD (mm/inch)	Wall Thickness (mm)	Model
Φ6.35(1/4)	≥0.8	0
Φ9.52(3/8)	≥0.8	0
Φ12.70(1/2)	≥0.8	0
Φ15.9(5/8)	≥1.0	0
Φ19.05(3/4)	≥1.0	0

f. After the inner part of the copper pipe is cleaned and dried, the inlet and outlet must be sealed tightly by using pipe caps, plugs or adhesive tapes.

2.2 Condensate water pipe

a. Pipes that can be used for air conditioner drainage include: water supplying UPVC pipe, PP-R pipe, PP-C pipe, and HDG steel pipe;

b. All relevant certificates and quality test reports are provided.

c. Requirements for specifications and wall thickness

Water supplying UPVC pipe: Φ32mm×2mm，Φ40mm×2mm，Φ50mm×2.5mm;

HDG steel pipe: Φ25mm×3.25mm，Φ32mm×3.25mm，Φ40mm×3.5mm，Φ50mm×3.5mm.

2.3 Insulation material

a. Rubber foam insulation material;

b. Flame retardancy level: B1 or higher;

c. Refractoriness: at least 120℃;

d. The insulation thickness of condensate water pipe: at least 10 mm;

e. When the diameter of copper pipe is equal to or greater than Φ15.9 mm, the thickness of insulation material should be at least 20 mm; when the diameter of copper pipe is less than 15.9 mm, the thickness of insulation material should be at least 15 mm.

2.4 Communication cable and control cable

Note: For air conditioning units installed in places with strong electromagnetic interference, shielded wire must be used as the communication cables of the IDU and wired controller, and shielded twisted pairs must be used as the communication cables between IDUs and between the IDU and ODU.

Communication cable selection for IDU and IDU(ODU)

Material Type	Total Length of Communication Cable between IDU Unit and IDU (ODU) Unit L(m/feet)	Wire size (mm^2/AWG)	Material Standard	Remarks
Light/Ordinary polyvinyl chloride sheathed cord. (60227 IEC 52 /60227 IEC 53)	L≤1000(3280-5/6)	≥2×0.75 (≥2×AWG18)	IEC 60227-5:2007	1. If the wire diameter is enlarged to 2×1 mm^2 (2×AWG16), the total communication line length can reach 1500 m (4921-1/4feet). 2. The cord shall be Circular cord (the cores shall be twisted together). 3. If unit is installed in places with intense magnetic field or strong interference, it is necessary to use shielded wire.

Communication cable selection for IDU and wired controller

Material type	Total length of communication Cable between IDU unit and wired controller L(m/feet)	Wire size (mm^2/AWG)	Material standard	Remarks
Light/Ordinary polyvinyl chloride sheathed cord. (60227 IEC 52 /60227 IEC 53)	L≤250(820-1/5)	2×0.75~2×1.25 (2×AWG18~2×AWG16)	IEC 60227-5:2007	1. Total length of communication line can't exceed 250m (820-1/5feet). 2. The cord shall be Circular cord (the cores shall be twisted together). 3. If unit is installed in places with intense magnetic field or strong interference, it is necessary to use shielded wire.

2.5 Power cable

Only copper conductors can be used as power cables. The copper conductors must meet relevant national standard and satisfy the carrying capacity of unit.

2.6 Hanger rod and support

a. Hanger rod: M8 or M10;

b. U-steel: 14# or above;

c. Angle steel: 30mm×30mm×3mm or above;

d. Round steel: Φ10mm or above

3 Installation of Indoor Unit

3.1 Installation of Floor Standing indoor unit

3.1.1 Outline and installation dimension

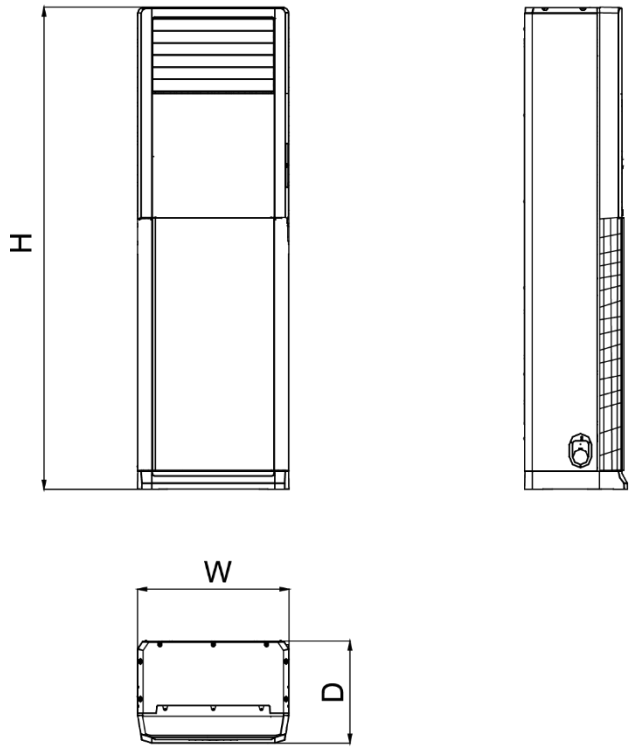

Unit: mm

Model \ Item	W	H	D
GMV-ND100L/A-T GMV-ND140L/A-T	580	1870	400

3.1.2 Installation space

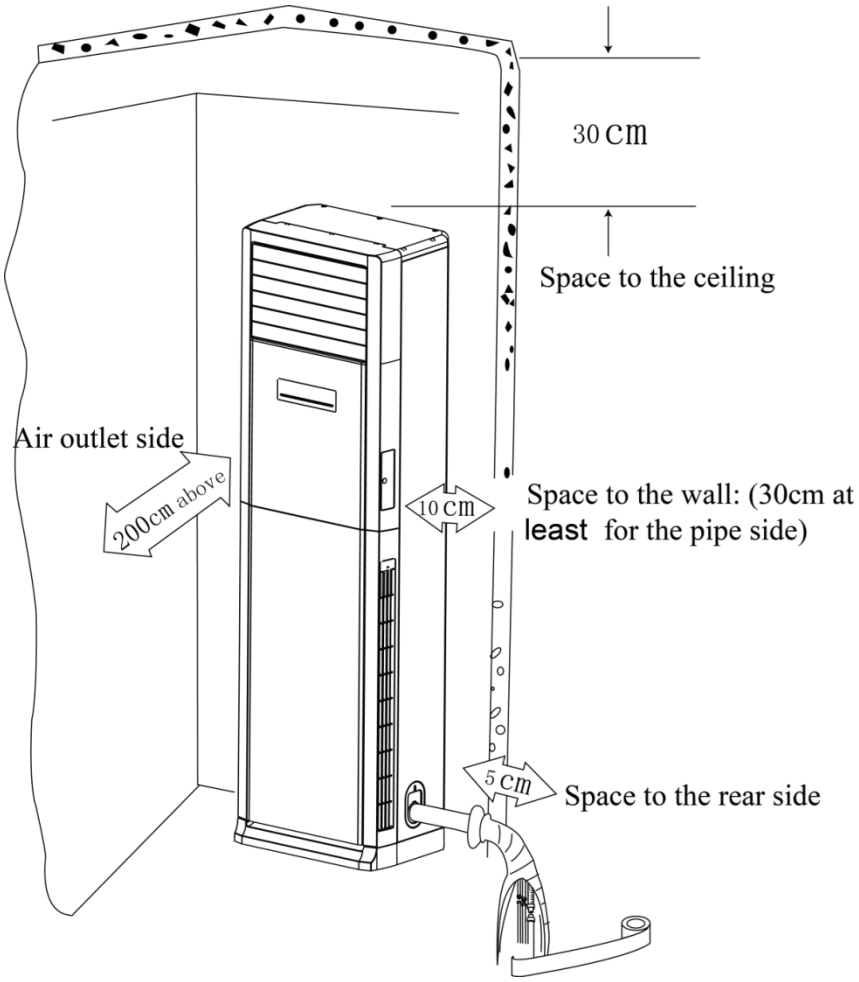

3.1.3 Installation notice

◆The unit shall be installed by the professional personnel according to this installation instruction to ensure proper use.

◆Please contact the local Gree appointed service center before installation. Any malfunctioncaused by the unit that is not installed by the Gree appointed service center would probably not be dealt with on time because of the inconvenience of the business contact.

◆It should be guided under the professional personnel when the air conditioner unit is moved to other place.

3.14 Selection of air switch and power cord

Model	Power Cord Size	Air Switch apacity (A)	Minimum Sectional Area of Ground Wire (mm^2/AWG)	Minimum Sectional Area of Power Cord (mm^2/AWG)
GMV-ND100L/A-T	220V~240V/50HZ 208V/230V/60HZ	6	1.0/AWG18	1.0/AWG18
GMV-ND140L/A-T	220V~240V/50HZ 208V/230V/60HZ	6	1.0/AWG18	1.0/AWG18

3.2 Installation of High Static Pressure Duct Type unit

3.2.1 Outline and installation dimension

Model： GMV-ND56PHS/A-T~ GMV-ND160PHS/A-T

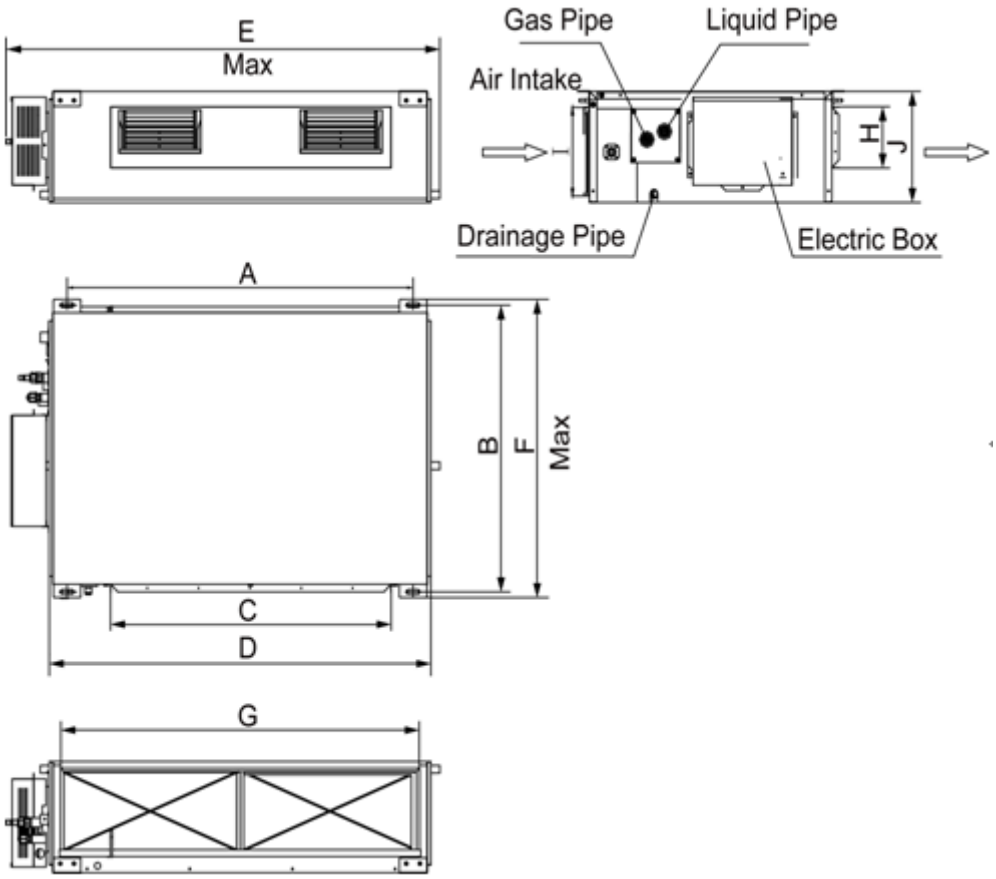

Below are dimensions of A, B, C, etc. for different models:

Unit: mm/inch

Model	A	B	C	D	E	F	G	H	I	J
GMV-ND56PHS/A-T	1101 (43-3/8)	517 (20-3/8)	820 (32-1/4)	1159 (45-5/8)	1271 (50)	558 (22)	1002 (39-1/2)	160 (6-1/4)	235 (9-1/4)	268 (10-1/2)
GMV-ND63PHS/A-T										
GMV-ND71PHS/A-T										
GMV-ND80PHS/A-T										
GMV-ND90PHS/A-T	1011 (39-3/4)	748 (29-1/2)	820 (32-1/4)	1115 (43-7/8)	1229 (48-3/8)	775 (30-1/2)	979 (38-1/2)	160 (6-1/4)	231 (9-1/8)	290 (11-3/8)
GMV-ND100PHS/A-T										
GMV-ND112PHS/A-T										
GMV-ND125PHS/A-T										
GMV-ND140PHS/A-T										
GMV-ND160PHS/A-T	1177	646	852	1150	1340	750	953	190	316	350

Model： GMV-ND224PH/A-T、GMV-ND280PH/A-T

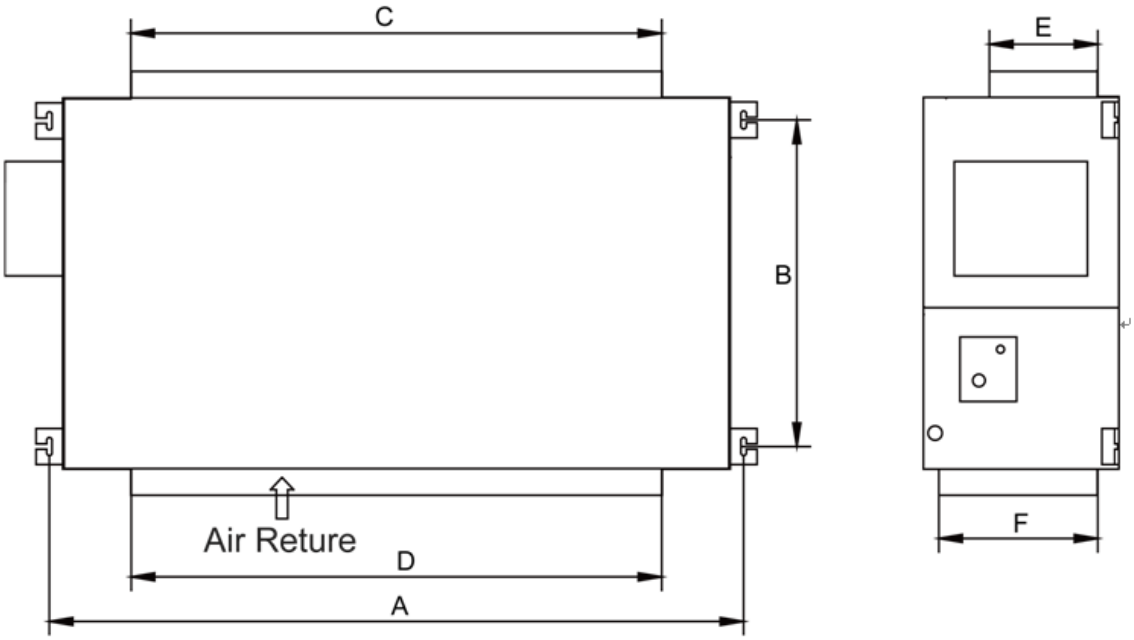

Below are dimensions of A, B, C, etc. for different models:

Unit: mm/inch

Model	A	B	C	D	E	F
GMV-ND224PH/A-T	1353 (53-1/4)	632 (24-7/8)	992 (39)	1150 (45-1/4)	192 (7-1/2)	327 (12-7/8)
GMV-ND280PH/A-T	1563 (61-1/8)	706 (27-3/4)	992 (39)	1350 (53-1/8)	192 (7-1/2)	402 (15-7/8)

3.2.2 Installation space

Model： GMV-ND56PHS/A-T~ GMV-ND160PHS/A-T

Unit: mm/inch

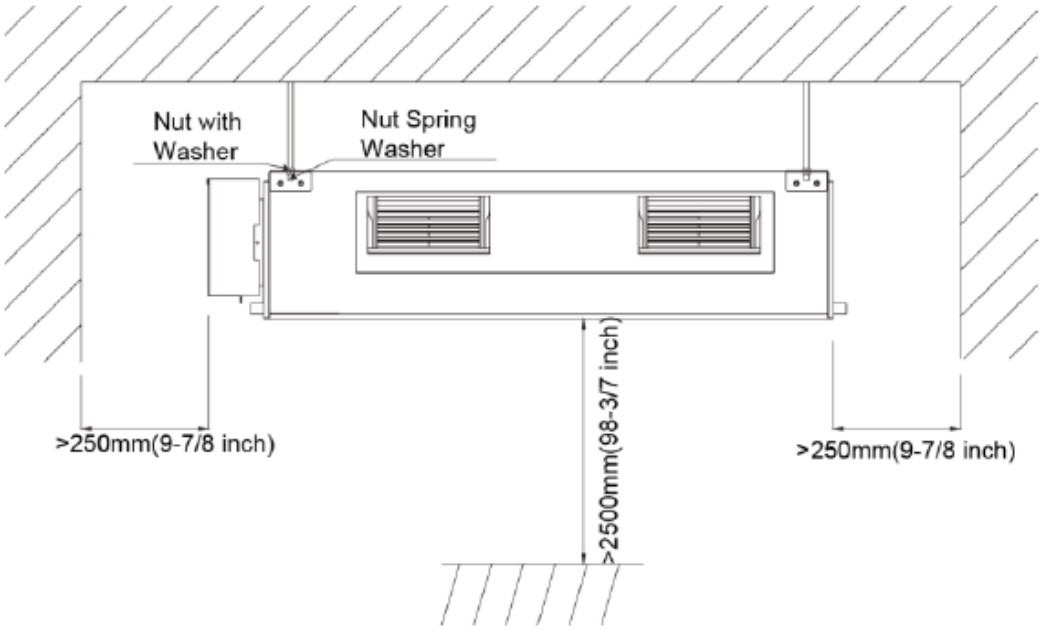

Model： GMV-ND224PH/A-T、GMV-ND280PH/A-T

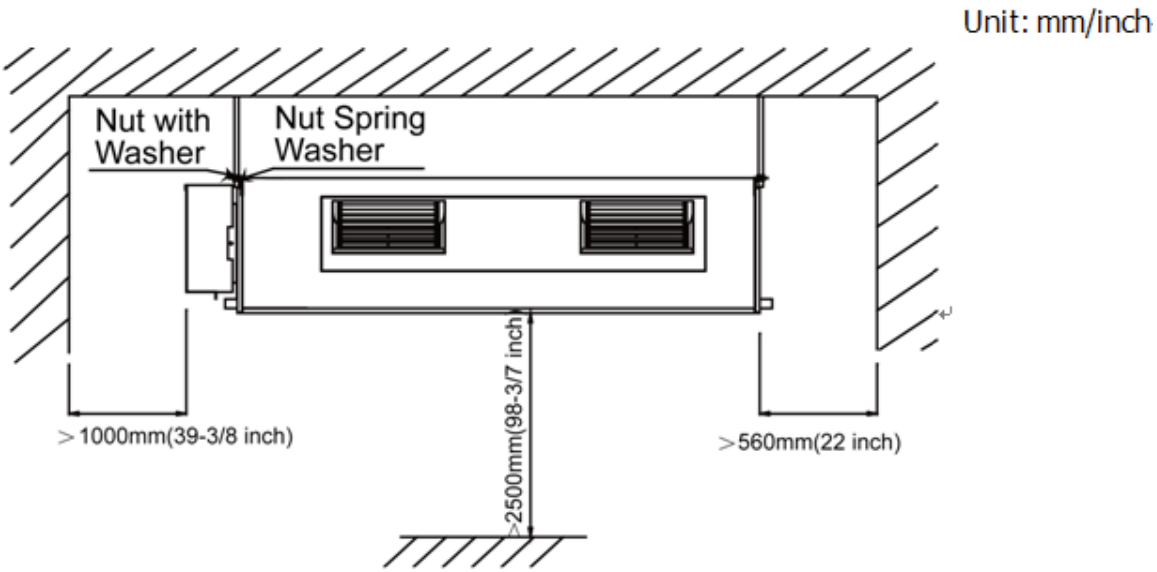

3.2.3 Installation notice

◆The unit shall be installed by the professional personnel according to this installation instruction to ensure proper use.

◆Please contact the local Gree appointed service center before installation. Any malfunctioncaused by the unit that is not installed by the Gree appointed service center would probably not be dealt with on time because of the inconvenience of the business contact.

◆It should be guided under the professional personnel when the air conditioner unit is moved to other place.

◆Installation of the unit must be in accordance with National Electric Codes and local regulations.

◆Improper installation will affect unit's performance, so do not install the unit by yourself. Please contact local dealer to arrange professional technicians for the installation.

◆Do not connect power until all installation work is finished.

◆If the supply cord is damaged, it must be replaced by the manufacturer or its service agent or a similarly qualified person in order to avoid a hazard

3.2.4 Selection of air switch and power cord

Model	Power Cord Size	Air Switch apacity (A)	Minimum Sectional Area of Ground Wire (mm^2/AWG)	Minimum Sectional Area of Power Cord (mm^2/AWG)
GMV-ND56PHS/A-T	220~240V/50Hz 208~230V/60Hz	6	1.0/AWG18	1.0/AWG18
GMV-ND63PHS/A-T	220~240V/50Hz 208~230V/60Hz	6	1.0/AWG18	1.0/AWG18
GMV-ND71PHS/A-T	220~240V/50Hz 208~230V/60Hz	6	1.0/AWG18	1.0/AWG18
GMV-ND80PHS/A-T	220~240V/50Hz 208~230V/60Hz	6	1.0/AWG18	1.0/AWG18
GMV-ND90PHS/A-T	220~240V/50Hz 208~230V/60Hz	6	1.0/AWG18	1.0/AWG18

Model	Power Cord Size	Air Switch apacity (A)	Minimum Sectional Area of Ground Wire (mm^2/AWG)	Minimum Sectional Area of Power Cord (mm^2/AWG)
GMV-ND100PHS/A-T	220~240V/50Hz 208~230V/60Hz	6	1.0/AWG18	1.0/AWG18
GMV-ND112PHS/A-T	220~240V/50Hz 208~230V/60Hz	6	1.0/AWG18	1.0/AWG18
GMV-ND125PHS/A-T	220~240V/50Hz 208~230V/60Hz	6	1.0/AWG18	1.0/AWG18
GMV-ND140PHS/A-T	220~240V/50Hz 208~230V/60Hz	6	1.0/AWG18	1.0/AWG18
GMV-ND160PHS/A-T	220~240V/50Hz 208~230V/60Hz	6	1.0/AWG18	1.0/AWG18
GMV-ND224PH/A-T	220~240V/50Hz 208~230V/60Hz	10	1.0/AWG18	1.0/AWG18
GMV-ND280PH/A-T	220~240V/50Hz 208~230V/60Hz	16	1.0/AWG18	1.0/AWG18

3.3 Installation of Low Static Pressure Duct Type unit

3.3.1 Outline and installation dimension

Model：GMV-ND22PLS/A-T~GMV-ND63PLS/A-T.

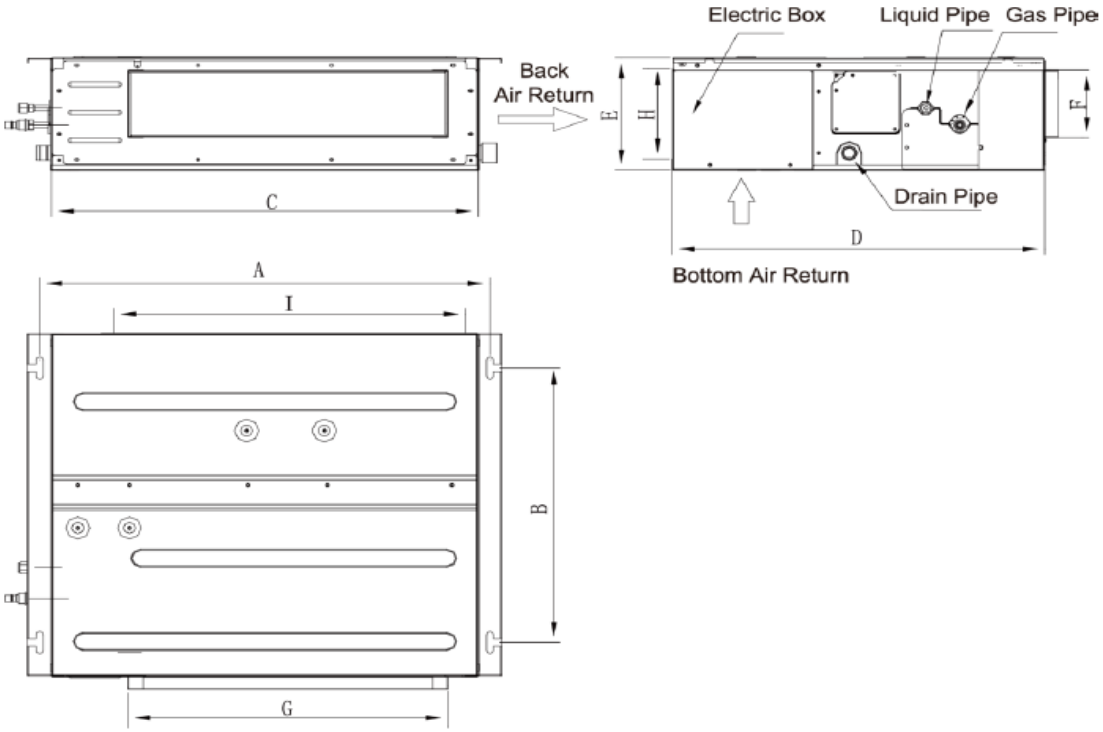

Below are dimensions of A, B, C, etc. for different models: Unit:mm

Model	A	B	C	D	E	F	G	H	I
GMV-ND22PLS/A-T	742	491	700	615	200	121	528	161	580
GMV-ND25PLS/A-T									
GMV-ND28PLS/A-T									
GMV-ND32PLS/A-T									
GMV-ND36PLS/A-T									
GMV-ND40PLS/A-T	942	491	900	615	200	121	728	161	780
GMV-ND45PLS/A-T									
GMV-ND50PLS/A-T									
GMV-ND56PLS/A-T	1142	491	1100	615	200	121	928	161	980
GMV-ND63PLS/A-T									

Model：GMV-ND71PLS/A-T~GMV-ND140PLS/A-T

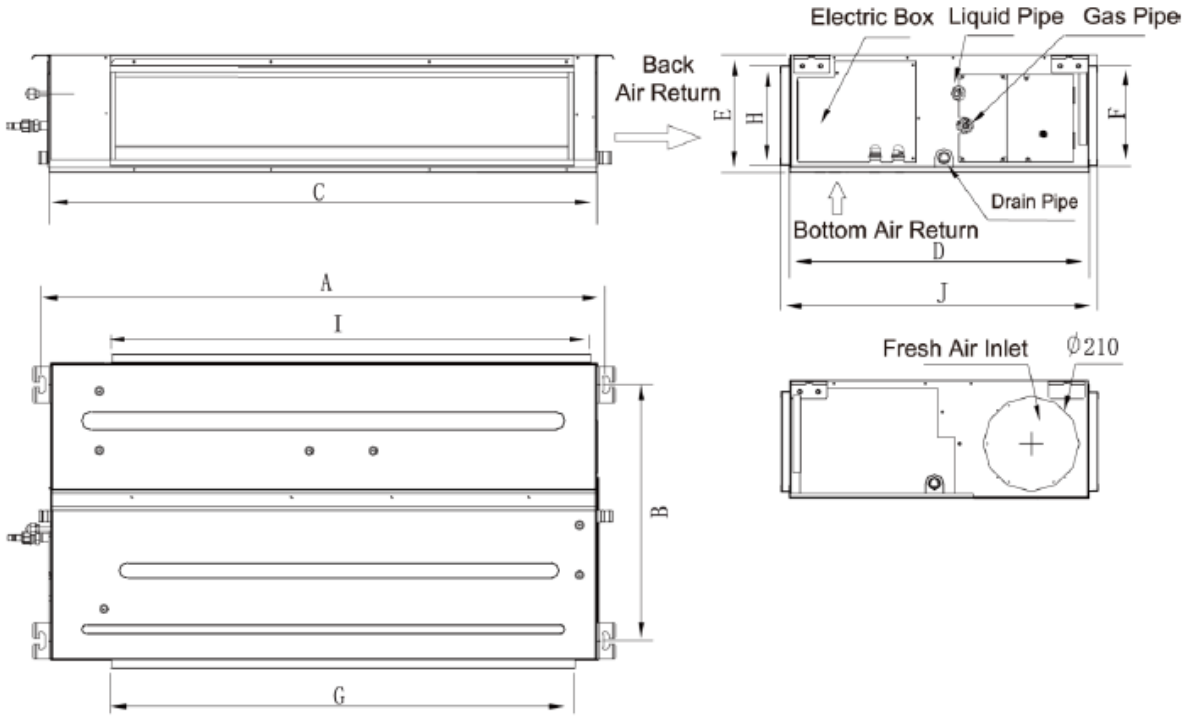

Below are dimensions of A, B, C, etc. for different models: Unit:mm

Model	A	B	C	D	E	F	G	H	I	J
GMV-ND71PLS/A-T	1236	565	1200	655	260	222	1016	220	1050	695
GMV-ND80PLS/A-T										
GMV-ND90PLS/A-T	1379	565	1340	655	260	207	1153	220	1188	716
GMV-ND100PLS/A-T										
GMV-ND112PLS/A-T										
GMV-ND125PLS/A-T										
GMV-ND140PLS/A-T										

3.3.2 Installation space

Unit：mm

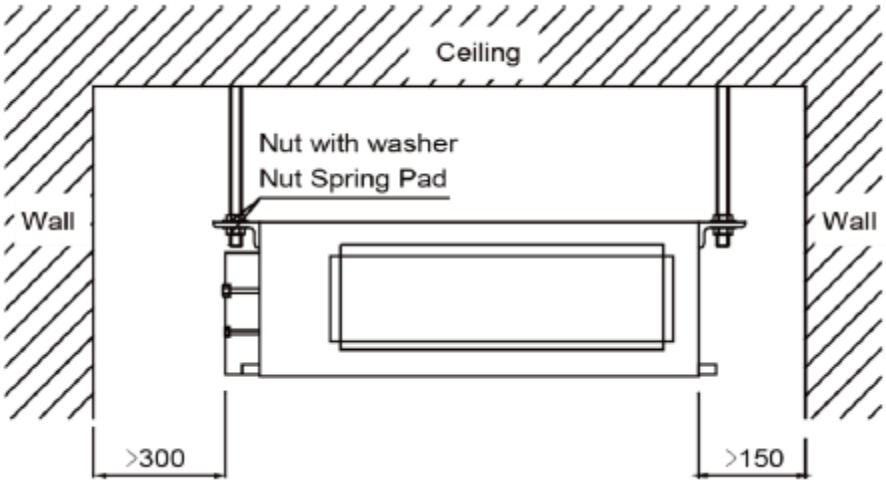

3.3.3 Installation notice

◆The unit shall be installed by the professional personnel according to this installation instruction to ensure proper use.

◆Please contact the local Gree appointed service center before installation. Any malfunctioncaused by the unit that is not installed by the Gree appointed service center would probably not be dealt with on time because of the inconvenience of the business contact.

◆It should be guided under the professional personnel when the air conditioner unit is moved to other place.

◆Installation of the unit must be in accordance with National Electric Codes and local regulations.

◆Improper installation will affect unit's performance, so do not install the unit by yourself. Please contact local dealer to arrange professional technicians for the installation.

◆Do not connect power until all installation work is finished.

3.3.4 Selection of air switch and power cord

Model	Power Cord Size	Air Switch apacity (A)	Minimum Sectional Area of Ground Wire (mm^2/AWG)	Minimum Sectional Area of Power Cord (mm^2/AWG)
GMV-ND22PLS/A-T	220~240V/50Hz 208~230V/60Hz	6	1.0/AWG18	1.0/AWG18
GMV-ND25PLS/A-T	220~240V/50Hz 208~230V/60Hz	6	1.0/AWG18	1.0/AWG18
GMV-ND28PLS/A-T	220~240V/50Hz 208~230V/60Hz	6	1.0/AWG18	1.0/AWG18
GMV-ND32PLS/A-T	220~240V/50Hz 208~230V/60Hz	6	1.0/AWG18	1.0/AWG18
GMV-ND36PLS/A-T	220~240V/50Hz 208~230V/60Hz	6	1.0/AWG18	1.0/AWG18
GMV-ND40PLS/A-T	220~240V/50Hz 208~230V/60Hz	6	1.0/AWG18	1.0/AWG18
GMV-ND45PLS/A-T	220~240V/50Hz 208~230V/60Hz	6	1.0/AWG18	1.0/AWG18

Model	Power Cord Size	Air Switch apacity (A)	Minimum Sectional Area of Ground Wire (mm^2/AWG)	Minimum Sectional Area of Power Cord (mm^2/AWG)
GMV-ND50PLS/A-T	220~240V/50Hz 208~230V/60Hz	6	1.0/AWG18	1.0/AWG18
GMV-ND56PLS/A-T	220~240V/50Hz 208~230V/60Hz	6	1.0/AWG18	1.0/AWG18
GMV-ND63PLS/A-T	220~240V/50Hz 208~230V/60Hz	6	1.0/AWG18	1.0/AWG18
GMV-ND71PLS/A-T	220~240V/50Hz 208~230V/60Hz	6	1.0/AWG18	1.0/AWG18
GMV-ND80PLS/A-T	220~240V/50Hz 208~230V/60Hz	6	1.0/AWG18	1.0/AWG18
GMV-ND90PLS/A-T	220~240V/50Hz 208~230V/60Hz	6	1.0/AWG18	1.0/AWG18
GMV-ND100PLS/A-T	220~240V/50Hz 208~230V/60Hz	6	1.0/AWG18	1.0/AWG18
GMV-ND112PLS/A-T	220~240V/50Hz 208~230V/60Hz	6	1.0/AWG18	1.0/AWG18
GMV-ND125PLS/A-T	220~240V/50Hz 208~230V/60Hz	6	1.0/AWG18	1.0/AWG18
GMV-ND140PLS/A-T	220~240V/50Hz 208~230V/60Hz	6	1.0/AWG18	1.0/AWG18

3.4 Installation of 4-way Cassette Type unit

3.4.1 Outline and installation dimension

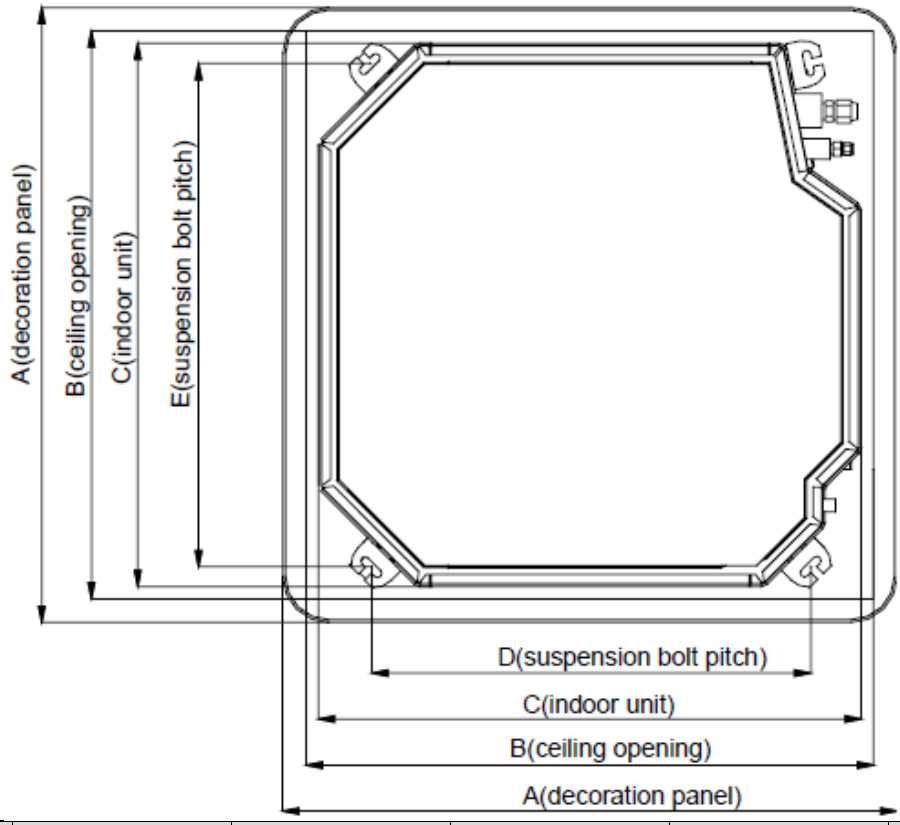

Model	A	B	C	D	E
28~140	950	890	840	680	780
160	1040	975	910	787	840

3.4.2 Installation space

Unit: mm

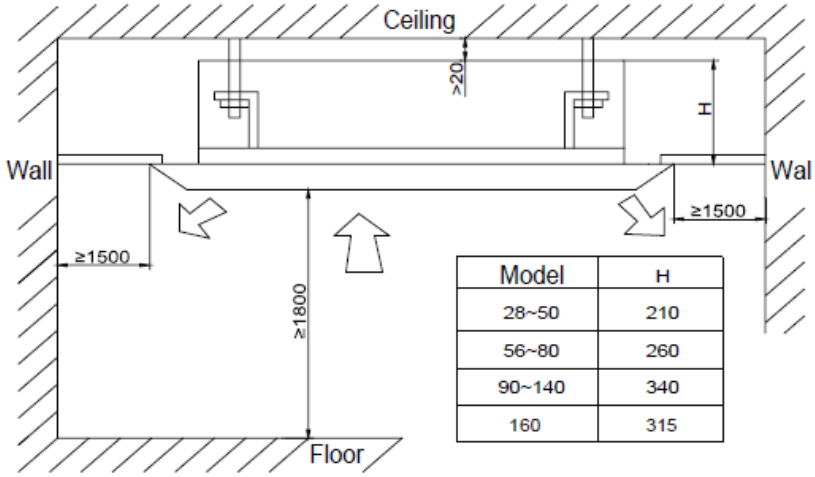

Model	H
28~50	210
56~80	260
90~140	340
160	315

3.4.3 Installation notice

◆The unit shall be installed by the professional personnel according to this installation instruction to ensure proper use.

◆Please contact the local Gree appointed service center before installation. Any malfunctioncaused by the unit that is not installed by the Gree appointed service center would probably not be dealt with on time because of the inconvenience of the business contact.

◆It should be guided under the professional personnel when the air conditioner unit is moved to other place.

◆The unit shall be installed in accordance with national standards or local regulations.

◆Only qualified personnel can carry out installation work, please contact with local dealer before installation.

◆Make sure all the installation work completed before energizing.

◆The appliances are not accessible to general public.

3.4.4 Selection of air switch and power cord

Model	Power Cord Size	Air Switch apacity (A)	Minimum Sectional Area of Ground Wire (mm^2/AWG)	Minimum Sectional Area of Power Cord (mm^2/AWG)
GMV-ND28T/A-T	220~240V/50Hz 208~230V/60Hz	6	1.0/AWG18	1.0/AWG18
GMV-ND36T/A-T	220~240V/50Hz 208~230V/60Hz	6	1.0/AWG18	1.0/AWG18
GMV-ND45T/A-T	220~240V/50Hz 208~230V/60Hz	6	1.0/AWG18	1.0/AWG18
GMV-ND50T/A-T	220~240V/50Hz 208~230V/60Hz	6	1.0/AWG18	1.0/AWG18
GMV-ND56T/A-T	220~240V/50Hz 208~230V/60Hz	6	1.0/AWG18	1.0/AWG18

Model	Power Cord Size	Air Switch apacity (A)	Minimum Sectional Area of Ground Wire (mm^2/AWG)	Minimum Sectional Area of Power Cord (mm^2/AWG)
GMV-ND63T/A-T	220~240V/50Hz 208~230V/60Hz	6	1.0/AWG18	1.0/AWG18
GMV-ND71T/A-T	220~240V/50Hz 208~230V/60Hz	6	1.0/AWG18	1.0/AWG18
GMV-ND80T/A-T	220~240V/50Hz 208~230V/60Hz	6	1.0/AWG18	1.0/AWG18
GMV-ND90T/A-T	220~240V/50Hz 208~230V/60Hz	6	1.0/AWG18	1.0/AWG18
GMV-ND100T/A-T	220~240V/50Hz 208~230V/60Hz	6	1.0/AWG18	1.0/AWG18
GMV-ND112T/A-T	220~240V/50Hz 208~230V/60Hz	6	1.0/AWG18	1.0/AWG18
GMV-ND125T/A-T	220~240V/50Hz 208~230V/60Hz	6	1.0/AWG18	1.0/AWG18
GMV-ND140T/A-T	220~240V/50Hz 208~230V/60Hz	6	1.0/AWG18	1.0/AWG18
GMV-ND160T/A-T	220~240V/50Hz 208~230V/60Hz	6	1.0/AWG18	1.0/AWG18

3.5 Installation of Compact 4-way Cassette Type unit

3.5.1 Outline and installation dimension

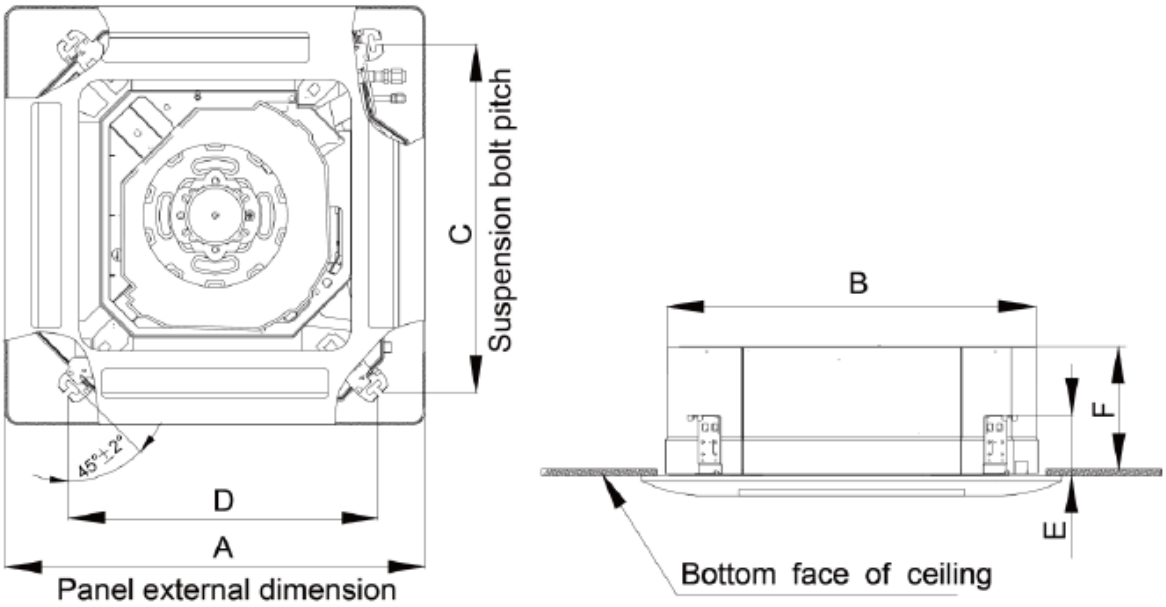

Model	A (mm)	B (mm)	C (mm)	D (mm)	E (mm)	F (mm)	Drainage Pipe(Outer Diameter× wall thickness) (mm)	Outer Diameter of Connection Pipe(mm)	
								Liquid pipe	Gas pipe
GMV-ND22T/B-T	670	596	592	571	145	240	Φ25×2. 5	6.35	9.52
GMV-ND28T/B-T								6.35	9.52
GMV-ND36T/B-T								6.35	12.7
GMV-ND45T/B-T								6.35	12.7
GMV-ND50T/B-T								6.35	12.7
GMV-ND56T/B-T								9.52	15.9

3.5.2 Installation space

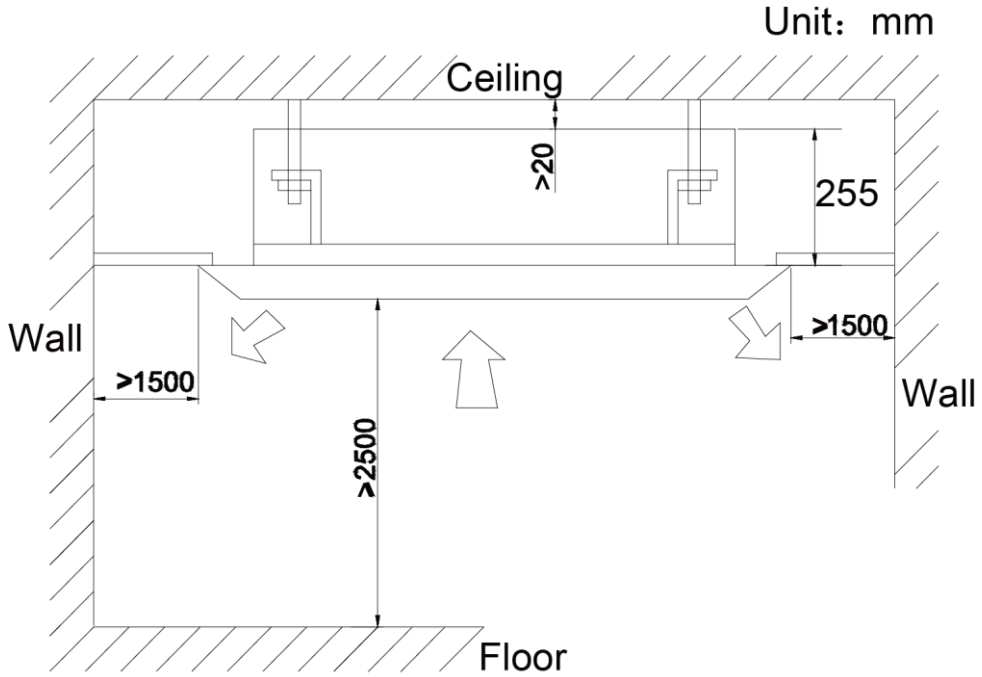

3.5.3 Installation notice

◆The unit shall be installed by the professional personnel according to this installation instruction to ensure proper use.

◆Please contact the local Gree appointed service center before installation. Any malfunctioncaused by the unit that is not installed by the Gree appointed service center would probably not be dealt with on time because of the inconvenience of the business contact.

◆It should be guided under the professional personnel when the air conditioner unit is moved to other place.

◆The unit shall be installed in accordance with national standards or local regulations.

◆Only qualified personnel can carry out installation work, please contact with local dealer before installation.

◆Make sure all the installation work completed before energizing.

3.5.4 Selection of air switch and power cord

Model	Power Cord Size	Air Switch apacity (A)	Minimum Sectional Area of Ground Wire (mm^2/AWG)	Minimum Sectional Area of Power Cord (mm^2/AWG)
GMV-ND22T/B-T	220~240V/50Hz 208~230V/60Hz	6	1.0/AWG18	1.0/AWG18
GMV-ND28T/B-T	220~240V/50Hz 208~230V/60Hz	6	1.0/AWG18	1.0/AWG18
GMV-ND36T/B-T	220~240V/50Hz 208~230V/60Hz	6	1.0/AWG18	1.0/AWG18
GMV-ND45T/B-T	220~240V/50Hz 208~230V/60Hz	6	1.0/AWG18	1.0/AWG18
GMV-ND50T/B-T	220~240V/50Hz 208~230V/60Hz	6	1.0/AWG18	1.0/AWG18
GMV-ND56T/B-T	220~240V/50Hz 208~230V/60Hz	6	1.0/AWG18	1.0/AWG18

3.6 Installation of Compact 2-way Cassette Type unit

3.6.1 Outline and installation dimension

Unit: mm

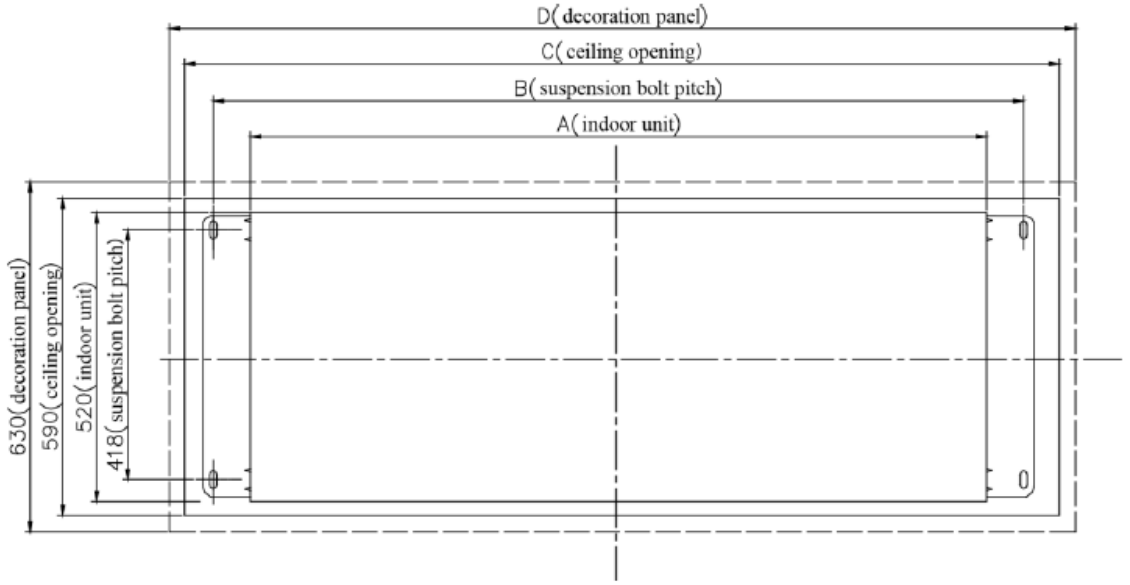

Unit: mm/inch

Model	Indoor unit(A)	Suspension bolt pitch(B)	Ceiling opening(C)	Decoration panel(D)	Outer diameter of connection pipe(mm)	
					Liquid pipe	Gas pipe
GMV-ND28TS/A-T	1200	1252	1403	1443	6.35	9.52
GMV-ND36TS/A-T GMV-ND45TS/A-T GMV-ND50TS/A-T	1200	1252	1403	1443	6.35	12.7
GMV-ND56TS/A-T GMV-ND63TS/A-T GMV-ND71TS/A-T	1200	1252	1403	1443	9.52	15.9

3.6.2 Installation space

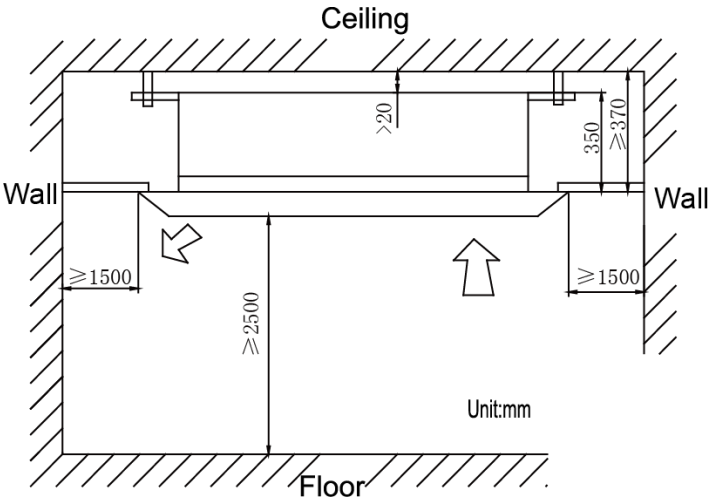

3.6.3 Installation notice

◆The unit shall be installed by the professional personnel according to this installation instruction to ensure proper use.

◆Please contact the local Gree appointed service center before installation. Any malfunctioncaused by the unit that is not installed by the Gree appointed service center would probably not be dealt with on time because of the inconvenience of the business contact.

◆It should be guided under the professional personnel when the air conditioner unit is moved to other place.

◆The unit shall be installed in accordance with national standards or local regulations.

◆Only qualified personnel can carry out installation work, please contact with local dealer before installation..

◆Make sure all the installation work completed before energizing.

3.6.4 Selection of air switch and power cord

Model	Power Cord Size	Air Switch apacity (A)	Minimum Sectional Area of Ground Wire (mm^2/AWG)	Minimum Sectional Area of Power Cord (mm^2/AWG)
GMV-ND28TS/A-T	220~240V/50Hz 208~230V/60Hz	6	1.0/AWG18	1.0/AWG18
GMV-ND36TS/A-T	220~240V/50Hz 208~230V/60Hz	6	1.0/AWG18	1.0/AWG18
GMV-ND45TS/A-T	220~240V/50Hz 208~230V/60Hz	6	1.0/AWG18	1.0/AWG18
GMV-ND50TS/A-T	220~240V/50Hz 208~230V/60Hz	6	1.0/AWG18	1.0/AWG18
GMV-ND56TS/A-T	220~240V/50Hz 208~230V/60Hz	6	1.0/AWG18	1.0/AWG18
GMV-ND63TS/A-T	220~240V/50Hz 208~230V/60Hz	6	1.0/AWG18	1.0/AWG18
GMV-ND71TS/A-T	220~240V/50Hz 208~230V/60Hz	6	1.0/AWG18	1.0/AWG18

3.7 Installation of Compact 1-way Cassette Type unit

3.7.1 Outline and installation dimension

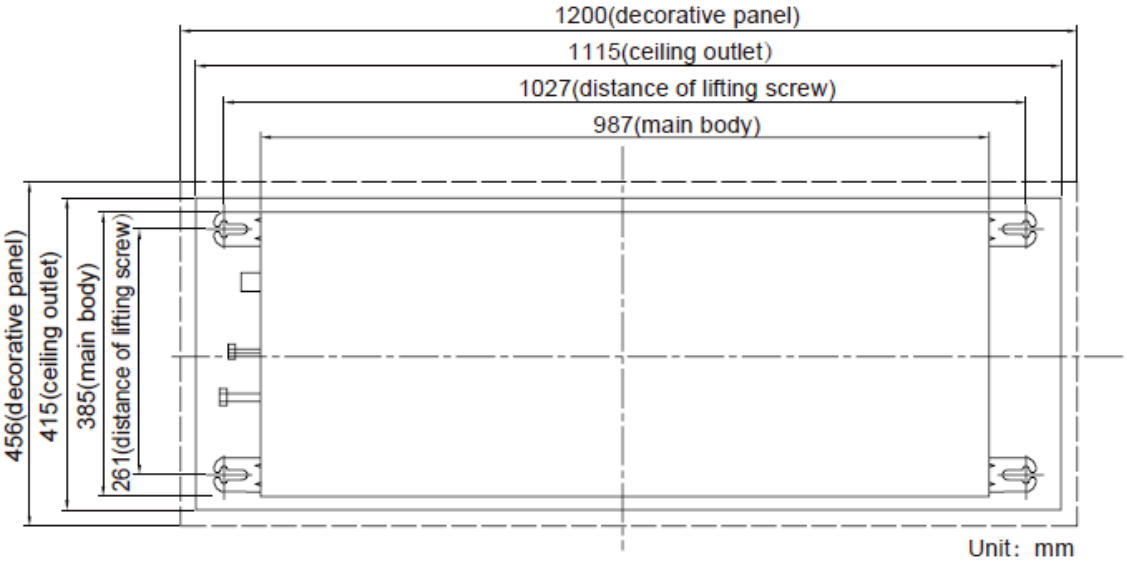

3.7.2 Installation space

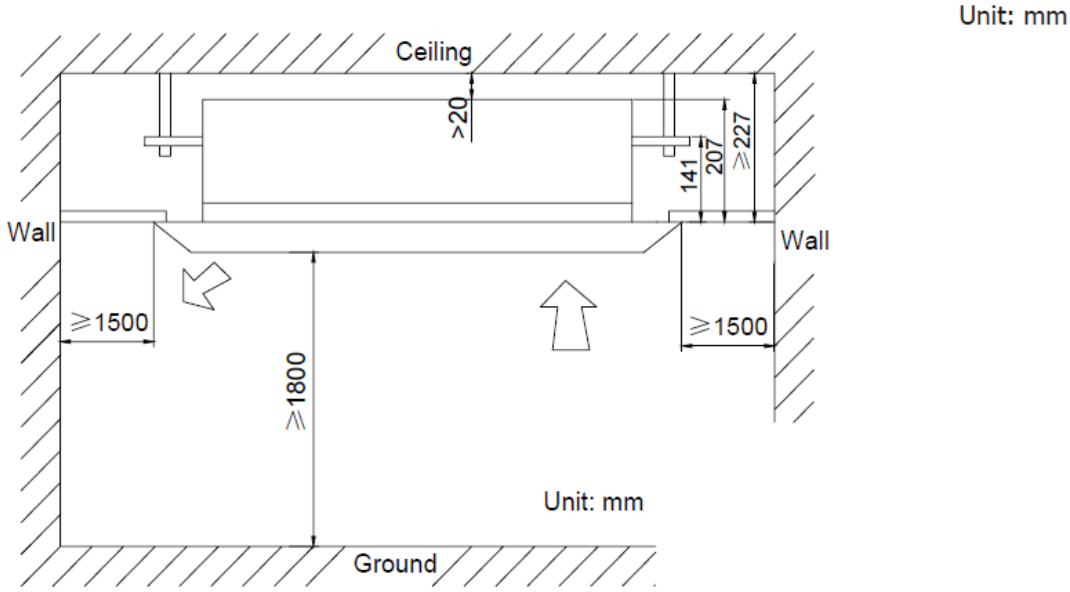

3.7.3 Installation notice

◆The unit shall be installed by the professional personnel according to this installation instruction to ensure proper use.

◆Please contact the local Gree appointed service center before installation. Any malfunctioncaused by the unit that is not installed by the Gree appointed service center would probably not be dealt with on time because of the inconvenience of the business contact.

◆It should be guided under the professional personnel when the air conditioner unit is moved to other place.

◆The unit shall be installed in accordance with national standards or local regulations.

◆Only qualified personnel can carry out installation work, please contact with local dealer before installation.

◆Make sure all the installation work completed before energizing.

3.7.4 Selection of air switch and power cord

Model	Power Cord Size	Air Switch apacity (A)	Minimum Sectional Area of Ground Wire (mm^2/AWG)	Minimum Sectional Area of Power Cord (mm^2/AWG)
GMV-ND22TD/A-T	220~240V/50Hz 208~230V/60Hz	6	1.0/AWG18	1.0/AWG18
GMV-ND28TD/A-T	220~240V/50Hz 208~230V/60Hz	6	1.0/AWG18	1.0/AWG18
GMV-ND36TD/A-T	220~240V/50Hz 208~230V/60Hz	6	1.0/AWG18	1.0/AWG18
GMV-ND45TD/A-T	220~240V/50Hz 208~230V/60Hz	6	1.0/AWG18	1.0/AWG18
GMV-ND50TD/A-T	220~240V/50Hz 208~230V/60Hz	6	1.0/AWG18	1.0/AWG18

3.8 Installation of Floor Ceiling Type unit

3.8.1 Outline and installation dimension

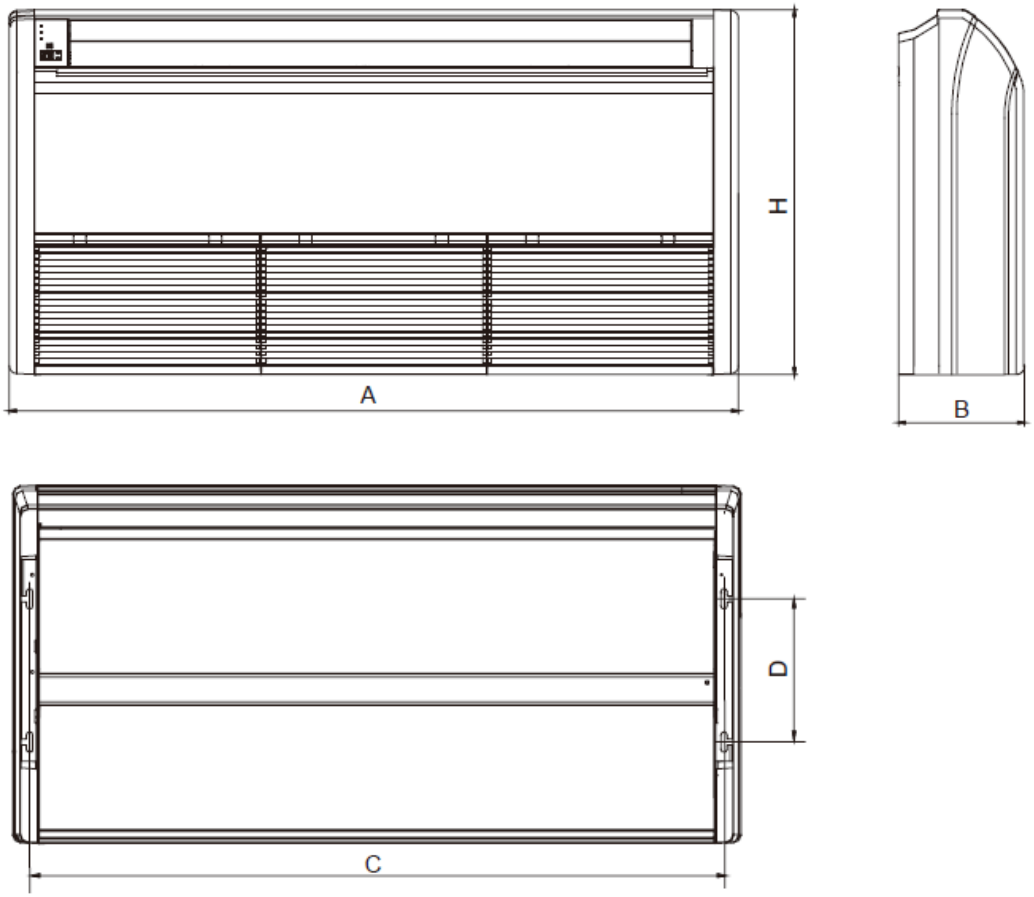

Below are dimensions of A, B, C, etc. for different models:

Unit: mm

Models:	A(mm)	B(mm)	C(mm)	D(mm)	H(mm)	Drainage pipe(Outer diameter × wall thickness) (mm)	Outer diameter of connection pipe(mm)	
							Liquid pipe	Gas pipe
GMV-ND28ZD/A-T	1220	225	1158	280	700	Φ17×1.75	6.35	9.52
GMV-ND36ZD/A-T GMV-ND50ZD/A-T							6.35	12.7
GMV-ND63ZD/A-T GMV-ND71ZD/A-T GMV-ND90ZD/A-T	1420	245	1354	280	700		9.52	15.9
GMV-ND112ZD/A-T GMV-ND125ZD/A-T GMV-ND140ZD/A-T	1700	245	1634	280	700		9.52	15.9

3.8.2 Installation space

Unit: mm

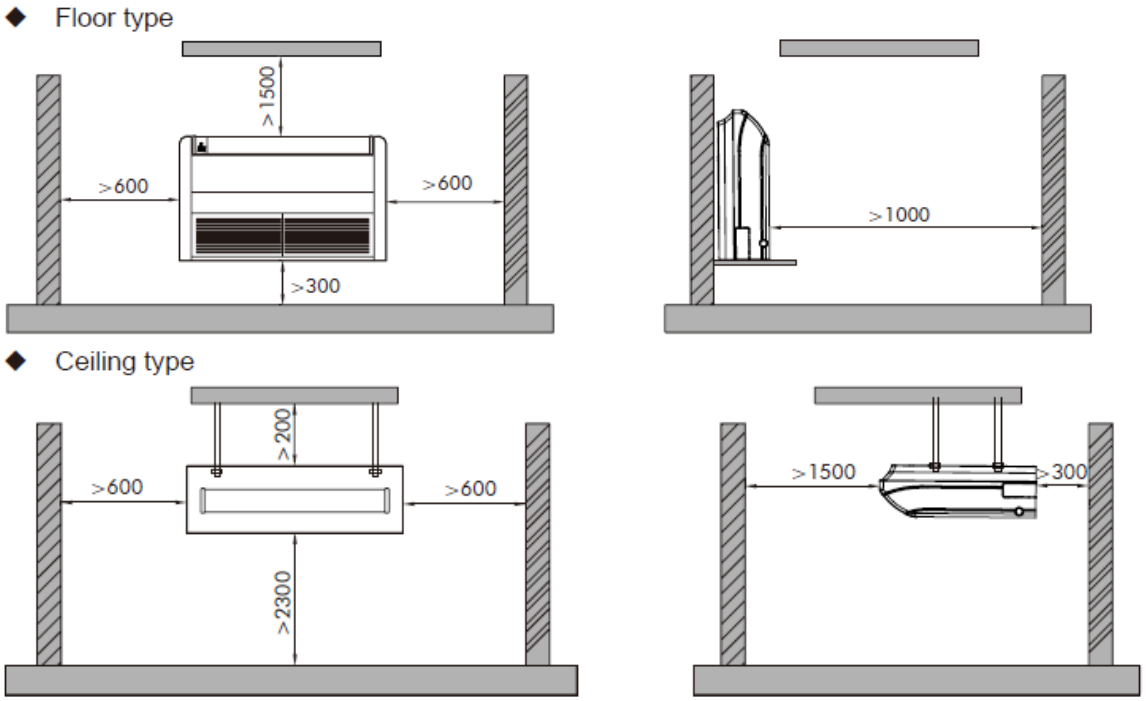

3.8.3 Installation notice

◆The unit shall be installed by the professional personnel according to this installation instruction to ensure proper use.

◆Please contact the local Gree appointed service center before installation. Any malfunctioncaused by the unit that is not installed by the Gree appointed service center would probably not be dealt with on time because of the inconvenience of the business contact.

◆It should be guided under the professional personnel when the air conditioner unit is moved to other place.

◆The unit shall be installed in accordance with national standards or local regulations.

◆Only qualified personnel can carry out installation work, please contact with local dealer before installation.

◆Make sure all the installation work completed before energizing.

3.8.4 Selection of air switch and power cord

Model	Power Cord Size	Air Switch apacity (A)	Minimum Sectional Area of Ground Wire (mm^2/AWG)	Minimum Sectional Area of Power Cord (mm^2/AWG)
GMV-ND28ZD/A-T	220~240V/50Hz 208~230V/60Hz	6	1.0/AWG18	1.0/AWG18
GMV-ND36ZD/A-T	220~240V/50Hz 208~230V/60Hz	6	1.0/AWG18	1.0/AWG18
GMV-ND50ZD/A-T	220~240V/50Hz 208~230V/60Hz	6	1.0/AWG18	1.0/AWG18
GMV-ND63ZD/A-T	220~240V/50Hz 208~230V/60Hz	6	1.0/AWG18	1.0/AWG18
GMV-ND71ZD/A-T	220~240V/50Hz 208~230V/60Hz	6	1.0/AWG18	1.0/AWG18
GMV-ND90ZD/A-T	220~240V/50Hz 208~230V/60Hz	6	1.0/AWG18	1.0/AWG18
GMV-ND112ZD/A-T	220~240V/50Hz 208~230V/60Hz	6	1.0/AWG18	1.0/AWG18
GMV-ND125ZD/A-T	220~240V/50Hz 208~230V/60Hz	6	1.0/AWG18	1.0/AWG18
GMV-ND140ZD/A-T	220~240V/50Hz 208~230V/60Hz	6	1.0/AWG18	1.0/AWG18

3.9 Installation of Fresh air Processing unit

3.9.1 Outline and installation dimension

GMV-NX140P/A(X1.2)-K

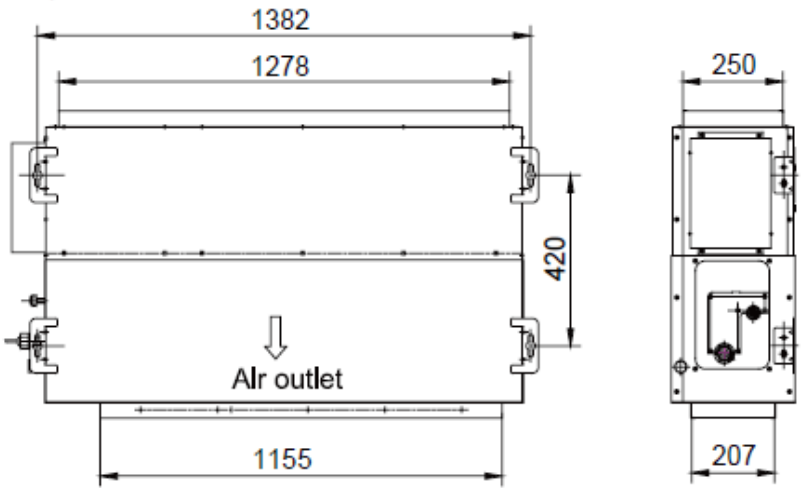

GMV-NX224P/A(X2.0)-M; GMV-NX280P/A(X2.5)-M; GMV-NX280P/A(X3.0)-M

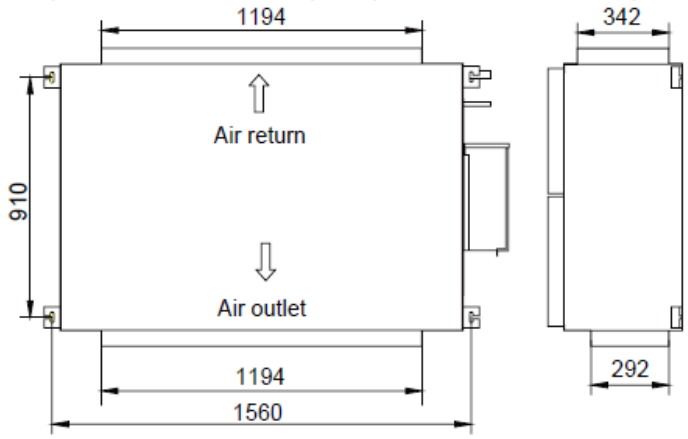

GMV-NX450P/A(X4.0)-M

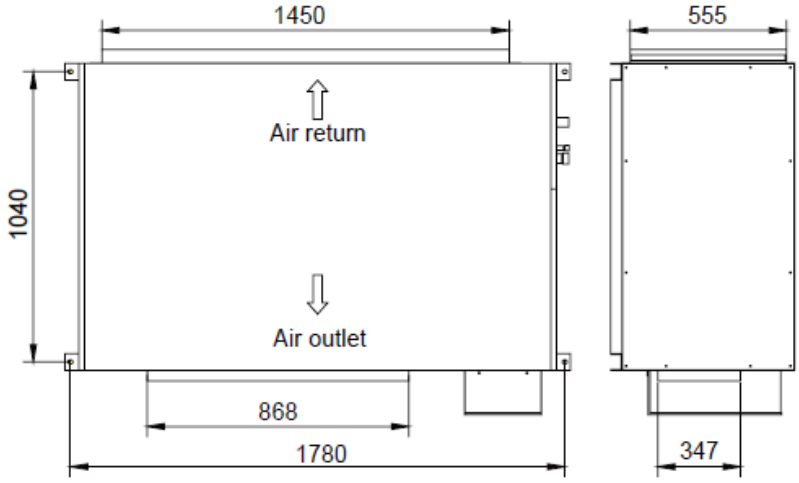

GMV-NDX224P/A-T、GMV-NDX280P/A-T

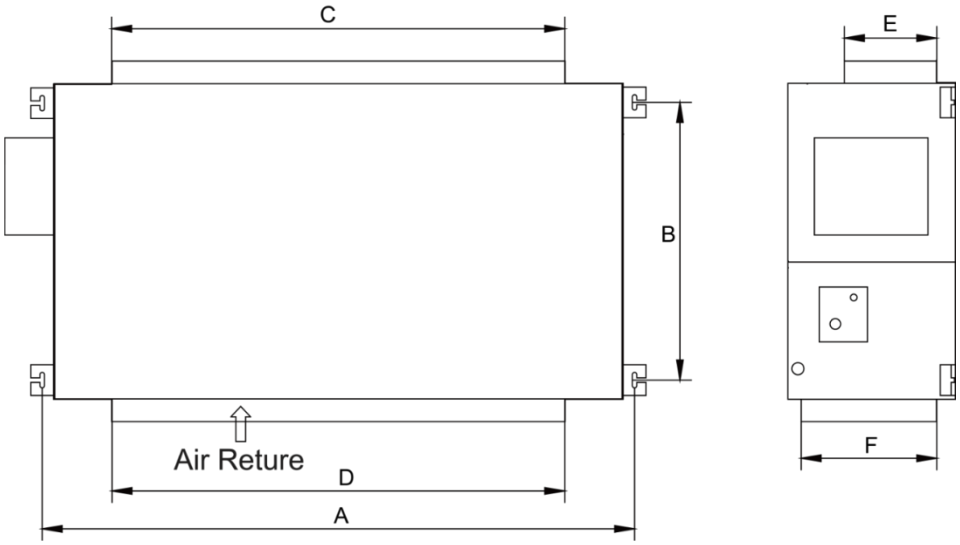

The table below lists the detailed dimensions.

Unit: mm

Model \ Item	A	B	C	D	E	F
GMV-NDX224P/A-T	1353	632	992	1150	192	327
GMV-NDX280P/A-T	1353	632	992	1150	192	327

3.9.2 Installation space

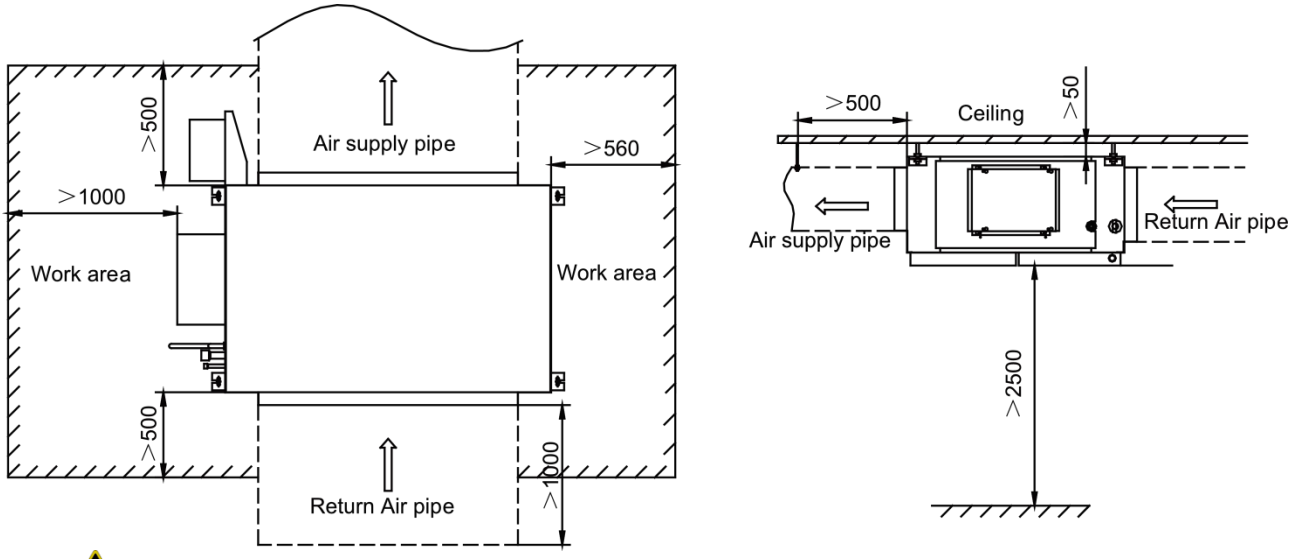

Note:

①. Installation of the unit must be in accordance with National Electric Codes and local safety regulations.

②. Improper installation will affect unit's performance, so do not install the unit by yourself. Please contact local dealer to arrange professional technicians for the installation.

③. Do not connect power until all installation work is finished.

3.9.3 Installation notice

◆The unit shall be installed by the professional personnel according to this installation instruction to ensure proper use.

◆Please contact the local Gree appointed service center before installation. Any malfunctioncaused by the unit that is not installed by the Gree appointed service center would probably not be dealt with on time because of the inconvenience of the business contact.

◆It should be guided under the professional personnel when the air conditioner unit is moved to other place.

3.9.4 Selection of air switch and power cord

Model	Power Cord Size	Air Switch apacity (A)	Minimum Sectional Area of Ground Wire (mm^2/AWG)	Minimum Sectional Area of Power Cord (mm^2/AWG)
GMV-NX140P/A(X1.2)-K	220-240V ~50Hz	6	1.0/AWG18	1.0/AWG18
GMV-NX224P/A(X2.0)-M	380-415V 3N ~50Hz	6	1.0/AWG18	1.0/AWG18
GMV-NX280P/A(X2.5)-M	380-415V 3N ~50Hz	6	1.0/AWG18	1.0/AWG18
GMV-NX280P/A(X3.0)-M	380-415V 3N ~50Hz	6	1.0/AWG18	1.0/AWG18

Model	Power Cord Size	Air Switch apacity (A)	Minimum Sectional Area of Ground Wire (mm^2/AWG)	Minimum Sectional Area of Power Cord (mm^2/AWG)
GMV-NX450P/A(X4.0)-M	380-415V 3N ~50Hz	6	1.0/AWG18	1.0/AWG18
GMV-NDX224P/A-T	220~240V 1Ph 50Hz 208~230V 1Ph 60Hz	10	1.0/AWG18	1.0/AWG18
GMV-NDX280P/A-T	220~240V 1Ph 50Hz 208~230V 1Ph 60Hz	10	1.0/AWG18	1.0/AWG18

3.10 Installation of Slim Duct Type unit

3.10.1 Outline and installation dimension

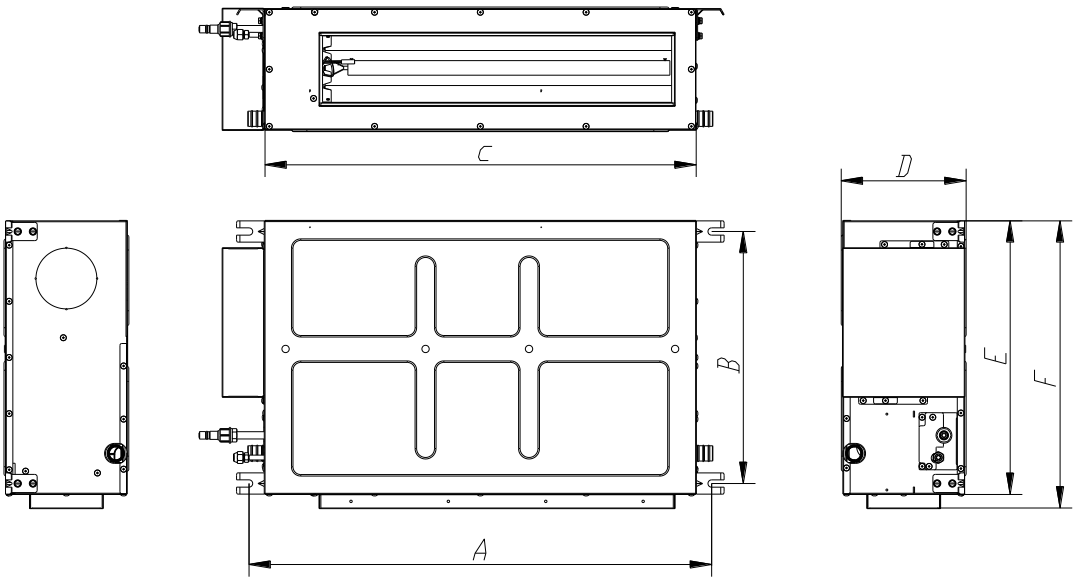

Unit: mm

Model \ Item	A	B	C	D	E	F
GMV-ND22~36PL/B-T	760	415	710	200	450	475
GMV-ND40~63PL/B-T	1060	415	1010	200	450	475
GMV-ND72PL/B-T	1360	415	1310	200	450	475

3.10.2Installation space

Unit：mm

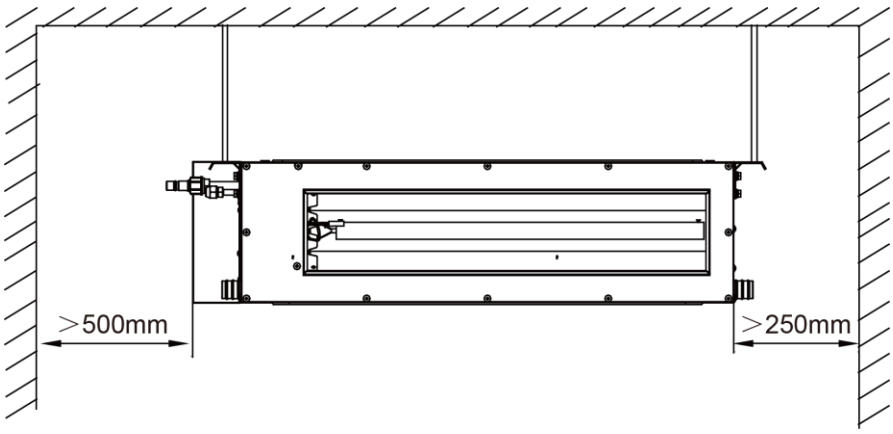

3.10.3 Installation notice

◆The unit shall be installed by the professional personnel according to this installation instruction to ensure proper use.

◆Please contact the local Gree appointed service center before installation. Any malfunctioncaused by the unit that is not installed by the Gree appointed service center would probably not be dealt with on time because of the inconvenience of the business contact.

◆It should be guided under the professional personnel when the air conditioner unit is moved to other place.

◆Installation of the unit must be in accordance with National Electric Codes and local regulations.

◆Improper installation will affect unit's performance, so do not install the unit by yourself. Please contact local dealer to arrange professional technicians for the installation.

◆Do not connect power until all installation work is finished.

3.10.4 Selection of air switch and power cord

Model	Power Cord Size	Air Switch apacity (A)	Minimum Sectional Area of Ground Wire (mm^2/AWG)	Minimum Sectional Area of Power Cord (mm^2/AWG)
GMV-ND22PL/B-T	220-240V~50Hz/208-230V~60Hz	6	1.0/AWG18	1.0/AWG18
GMV-ND25PL/B-T	220-240V~50Hz/208-230V~60Hz	6	1.0/AWG18	1.0/AWG18
GMV-ND28PL/B-T	220-240V~50Hz/208-230V~60Hz	6	1.0/AWG18	1.0/AWG18
GMV-ND32PL/B-T	220-240V~50Hz/208-230V~60Hz	6	1.0/AWG18	1.0/AWG18
GMV-ND36PL/B-T	220-240V~50Hz/208-230V~60Hz	6	1.0/AWG18	1.0/AWG18
GMV-ND40PL/B-T	220-240V~50Hz/208-230V~60Hz	6	1.0/AWG18	1.0/AWG18
GMV-ND45PL/B-T	220-240V~50Hz/208-230V~60Hz	6	1.0/AWG18	1.0/AWG18
GMV-ND50PL/B-T	220-240V~50Hz/208-230V~60Hz	6	1.0/AWG18	1.0/AWG18
GMV-ND56PL/B-T	220-240V~50Hz/208-230V~60Hz	6	1.0/AWG18	1.0/AWG18
GMV-ND63PL/B-T	220-240V~50Hz/208-230V~60Hz	6	1.0/AWG18	1.0/AWG18
GMV-ND72PL/B-T	220-240V~50Hz/208-230V~60Hz	6	1.0/AWG18	1.0/AWG18

3.11 Installation of Air Handler type Indoor Unit

3.10.1 Outline and installation dimension

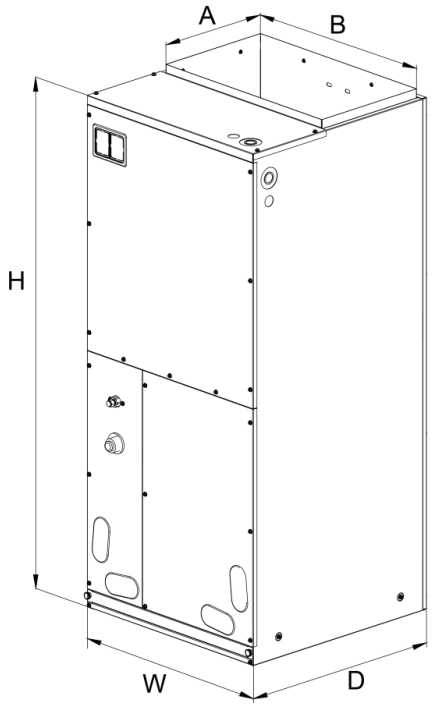

Unit: mm

MODEL	DIMENSION				
	W	D	H	A	B
GMV-NR71A/A-D	460	540	1105	295	426
GMV-NR90A/A-D	460	540	1105	295	426
GMV-NR100A/A-D	540	540	1224	295	508
GMV-NR112A/A-D	540	540	1224	295	508
GMV-NR140A/A-D	630	540	1224	295	508

3.10.2 Installation notice

When installing the air handler, take consideration to minimize the length of refrigerant tubing as much as possible. Do not install the air handler in a location either above or below the condenser that violates the instructions provided with the condenser. Service clearance is to take precedence. Allow a minimum of 24” in front of the unit for service clearance. When installing in an area directly over a finished ceiling (such as an attic), an emergency drain pan is required directly under the unit. See local and state codes for requirements. When installing this unit in an area that may become wet, elevate the unit with a sturdy, non-porous material. In installations that may lead to physical damage (i.e. a garage) it is advised to install a protective barrier to prevent such damage.

This air handler is designed for a complete supply and return ductwork system. Do not operate this product without all ductwork attached.

Based upon the actual conditions, if air handler is installed as type (A), the air handler should be concealed in a specific room or space and make sure the air handler is not accessible to the general public.

Based upon the actual conditions, if air handler is installed as type (B), make sure that there is enough space for care and maintenance and the height between the air handler and ground is above 2500mm. And the air handler is not accessible to the general public.

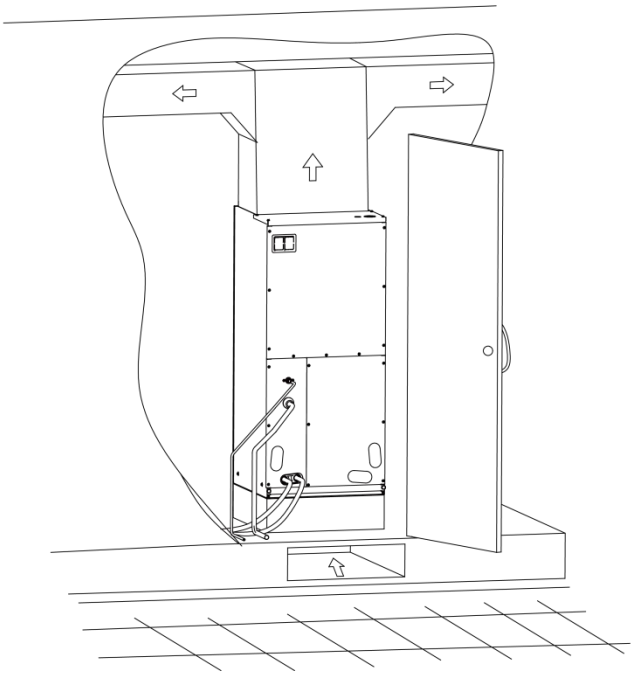

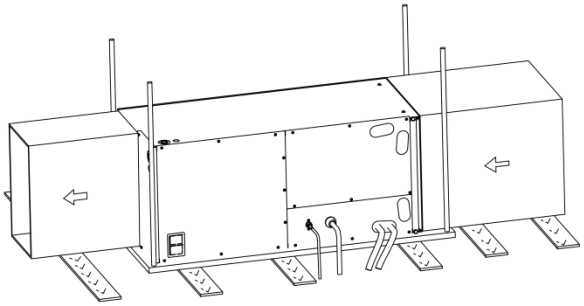

3.10.3 Selection of air switch and power cord

Model	Power Supply	Circuit Breaker Capacity (A)	Minimum Sectional Area of Ground Wire (mm^2/AWG)	Minimum Sectional Area of Power Cord (mm^2/AWG)
GMV-NR71A/A-D	208-230V~60Hz	6	1.0/AWG18	1.0/AWG18
GMV-NR90A/A-D	208-230V~60Hz	6	1.0/AWG18	1.0/AWG18
GMV-NR100A/A-D	208-230V~60Hz	6	1.0/AWG18	1.0/AWG18
GMV-NR112A/A-D	208-230V~60Hz	6	1.0/AWG18	1.0/AWG18
GMV-NR140A/A-D	208-230V~60Hz	6	1.0/AWG18	1.0/AWG18

3.11 Installation of Wall-Mounted Unit

3.11.1 Outline and installation dimension

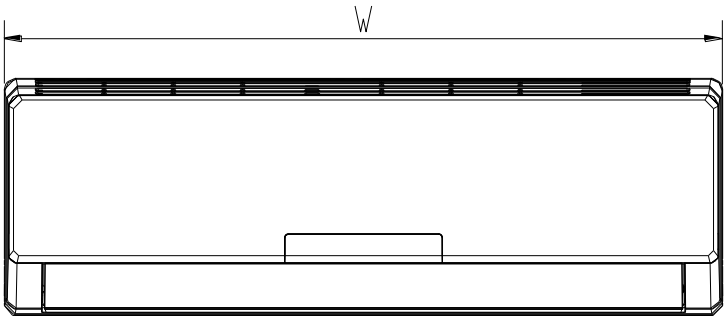

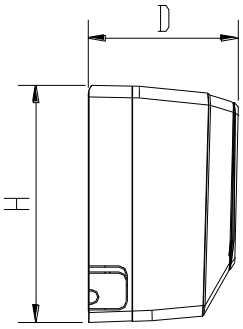

The table below lists the detailed dimensions.

Unit: mm

Model \ Item	W	H	D
GMV-N22G/A3A-K, GMV-N28G/A3A-K, GMV-N22G/A2A-K GMV-N28G/A2A-K, GMV-N22G/A4A-K, GMV-N28G/A4A-K GMV-N22G/A8A-K, GMV-N28G/A8A-K, GMV-N22G/C9A-K GMV-N28G/C9A-K, GMV-N22G/E3A-K, GMV-N28G/E3A-K, GMV-N22G/A3A-D, GMV-N28G/A3A-D,GMV-N22G/A2A-D, GMV-N28G/A2A-D, GMV-N22G/A4A-D,GMV-N28G/A4A-D, GMV-N22G/A8A-D, GMV-N28G/A8A-D,GMV-N22G/C9A-D, GMV-N28G/C9A-D, GMV-N22G/E3A-D, GMV-N28G/E3A-D	843	275	180
GMV-N36G/A3A-K, GMV-N45G/A3A-K, GMV-N50G/A3A-K GMV-N36G/A2A-K, GMV-N45G/A2A-K, GMV-N50G/A2A-K GMV-N36G/A4A-K, GMV-N45G/A4A-K, GMV-N50G/A4A-K GMV-N36G/A8A-K, GMV-N45G/A8A-K, GMV-N50G/A8A-K GMV-N36G/C9A-K, GMV-N45G/C9A-K, GMV-N50G/C9A-K GMV-N36G/E3A-K, GMV-N45G/E3A-K, GMV-N50G/E3A-K GMV-N36G/A3A-D, GMV-N45G/A3A-D, GMV-N50G/A3A-D GMV-N36G/A2A-D, GMV-N45G/A2A-D, GMV-N50G/A2A-D GMV-N36G/A4A-D, GMV-N45G/A4A-D, GMV-N50G/A4A-D GMV-N36G/A8A-D, GMV-N45G/A8A-D, GMV-N50G/A8A-D GMV-N36G/C9A-D, GMV-N45G/C9A-D, GMV-N50G/C9A-D GMV-N36G/E3A-D, GMV-N45G/E3A-D, GMV-N50G/E3A-D	940	298	200
GMV-N56G/A3A-K, GMV-N63G/A3A-K, GMV-N71G/A3A-K GMV-N56G/A2A-K, GMV-N63G/A2A-K, GMV-N71G/A2A-K GMV-N56G/A4A-K, GMV-N63G/A4A-K, GMV-N71G/A4A-K GMV-N56G/A8A-K, GMV-N63G/A8A-K, GMV-N71G/A8A-K GMV-N56G/C9A-K, GMV-N63G/C9A-K, GMV-N71G/C9A-K GMV-N56G/E3A-K, GMV-N63G/E3A-K, GMV-N71G/E3A-K GMV-N56G/A3A-D, GMV-N63G/A3A-D, GMV-N71G/A3A-D GMV-N56G/A2A-D, GMV-N63G/A2A-D, GMV-N71G/A2A-D GMV-N56G/A4A-D, GMV-N63G/A4A-D, GMV-N71G/A4A-D GMV-N56G/A8A-D, GMV-N63G/A8A-D, GMV-N71G/A8A-D GMV-N56G/C9A-D, GMV-N63G/C9A-D, GMV-N71G/C9A-D GMV-N56G/E3A-D, GMV-N63G/E3A-D, GMV-N71G/E3A-D	1008	221	319

3.11.2 Installation space

Unit:mm

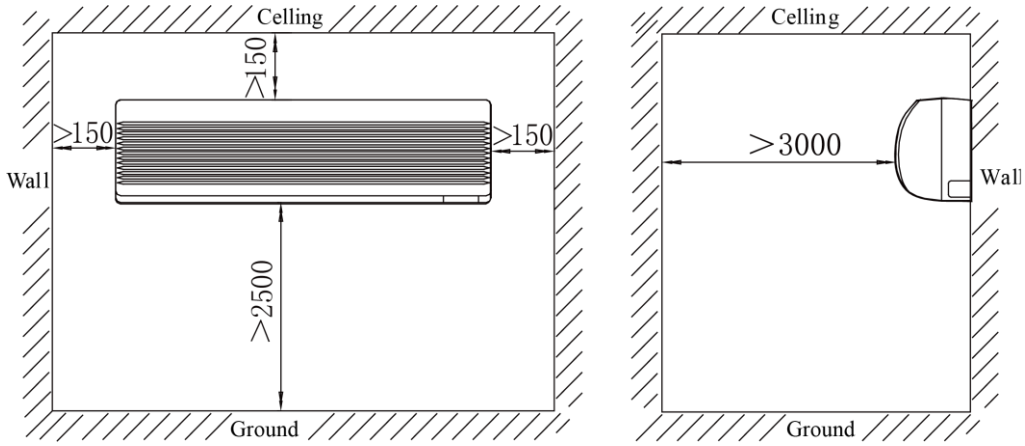

3.11.3 Installation notice

Connect the ends of the connection pipe with two leading pipes, and then tighten the joint nuts tightly.

Connect the connect pipe with the two relative leading pipe, tie the nut on tie –in of the connect pipe tightly.

Notes:

① Be careful in bending the connection pipes, or you would damage the pipes.

② If the tightening torque for the flare nut is too great, leakage would happen.

3.11.4 Selection of air switch and power cord

Model	Power Cord Size	Air Switch apacity (A)	Minimum Sectional Area of Ground Wire (mm^2/AWG)	Minimum Sectional Area of Power Cord (mm^2/AWG)
GMV-N22G/A3A-K, GMV-N22G/A2A-K GMV-N22G/A4A-K, GMV-N22G/A8A-K GMV-N22G/C9A-K, GMV-N22G/E3A-K	220-240V ~ 50Hz	6	1.0/AWG18	1.0/AWG18
GMV-N28G/A3A-K, GMV-N28G/A2A-K GMV-N28G/A4A-K, GMV-N28G/A8A-K GMV-N28G/C9A-K, GMV-N28G/E3A-K	220-240V ~ 50Hz	6	1.0/AWG18	1.0/AWG18
GMV-N36G/A3A-K, GMV-N36G/A2A-K GMV-N36G/A4A-K, GMV-N36G/A8A-K GMV-N36G/C9A-K, GMV-N36G/E3A-K	220-240V ~ 50Hz	6	1.0/AWG18	1.0/AWG18
GMV-N45G/A3A-K, GMV-N45G/A2A-K GMV-N45G/A4A-K, GMV-N45G/A8A-K GMV-N45G/C9A-K, GMV-N45G/E3A-K	220-240V ~ 50Hz	6	1.0/AWG18	1.0/AWG18
GMV-N50G/A3A-K, GMV-N50G/A2A-K GMV-N50G/A4A-K, GMV-N50G/A8A-K GMV-N50G/C9A-K, GMV-N50G/E3A-K	220-240V ~ 50Hz	6	1.0/AWG18	1.0/AWG18
GMV-N56G/A3A-K, GMV-N56G/A2A-K GMV-N56G/A4A-K, GMV-N56G/A8A-K GMV-N56G/C9A-K, GMV-N56G/E3A-K	220-240V ~ 50Hz	6	1.0/AWG18	1.0/AWG18
GMV-N63G/A3A-K, GMV-N63G/A2A-K GMV-N63G/A4A-K, GMV-N63G/A8A-K GMV-N63G/C9A-K, GMV-N63G/E3A-K	220-240V ~ 50Hz	6	1.0/AWG18	1.0/AWG18
GMV-N71G/A3A-K, GMV-N71G/A2A-K GMV-N71G/A4A-K, GMV-N71G/A8A-K GMV-N71G/C9A-K, GMV-N71G/E3A-K	220-240V ~ 50Hz	6	1.0/AWG18	1.0/AWG18

Model	Power Cord Size	Air Switch apacity (A)	Minimum Sectional Area of Ground Wire (mm^2/AWG)	Minimum Sectional Area of Power Cord (mm^2/AWG)
GMV-N22G/A3A-D, GMV-N22G/A2A-D GMV-N22G/A4A-D, GMV-N22G/A8A-D GMV-N22G/C9A-D, GMV-N22G/E3A-D	208~230V ~ 60Hz	6	1.0/AWG18	1.0/AWG18
GMV-N28G/A3A-D, GMV-N28G/A2A-D GMV-N28G/A4A-D, GMV-N28G/A8A-D GMV-N28G/C9A-D, GMV-N28G/E3A-D	208~230V ~ 60Hz	6	1.0/AWG18	1.0/AWG18
GMV-N36G/A3A-D, GMV-N36G/A2A-D GMV-N36G/A4A-D, GMV-N36G/A8A-D GMV-N36G/C9A-D, GMV-N36G/E3A-D	208~230V ~ 60Hz	6	1.0/AWG18	1.0/AWG18
GMV-N45G/A3A-D, GMV-N45G/A2A-D GMV-N45G/A4A-D, GMV-N45G/A8A-D GMV-N45G/C9A-D, GMV-N45G/E3A-D	208~230V ~ 60Hz	6	1.0/AWG18	1.0/AWG18
GMV-N50G/A3A-D, GMV-N50G/A2A-D GMV-N50G/A4A-D, GMV-N50G/A8A-D GMV-N50G/C9A-D, GMV-N50G/E3A-D	208~230V ~ 60Hz	6	1.0/AWG18	1.0/AWG18
GMV-N56G/A3A-D, GMV-N56G/A2A-D GMV-N56G/A4A-D, GMV-N56G/A8A-D GMV-N56G/C9A-D, GMV-N56G/E3A-D	208~230V ~ 60Hz	6	1.0/AWG18	1.0/AWG18
GMV-N63G/A3A-D, GMV-N63G/A2A-D GMV-N63G/A4A-D, GMV-N63G/A8A-D GMV-N63G/C9A-D, GMV-N63G/E3A-D	208~230V ~ 60Hz	6	1.0/AWG18	1.0/AWG18
GMV-N71G/A3A-D, GMV-N71G/A2A-D GMV-N71G/A4A-D, GMV-N71G/A8A-D GMV-N71G/C9A-D, GMV-N71G/E3A-D	208~230V ~ 60Hz	6	1.0/AWG18	1.0/AWG18

3.12 Console Type Indoor Unit

3.12.1 Outline and installation dimension

The table below lists the detailed dimensions.

Unit: mm

Model \ Item	W	H	D
GMV-ND22C/A-T, GMV-ND28C/A-T GMV-ND36C/A-T, GMV-ND45C/A-T GMV-ND50C/A-T	700	600	215

3.12.2 Installation space

(Unit:mm)

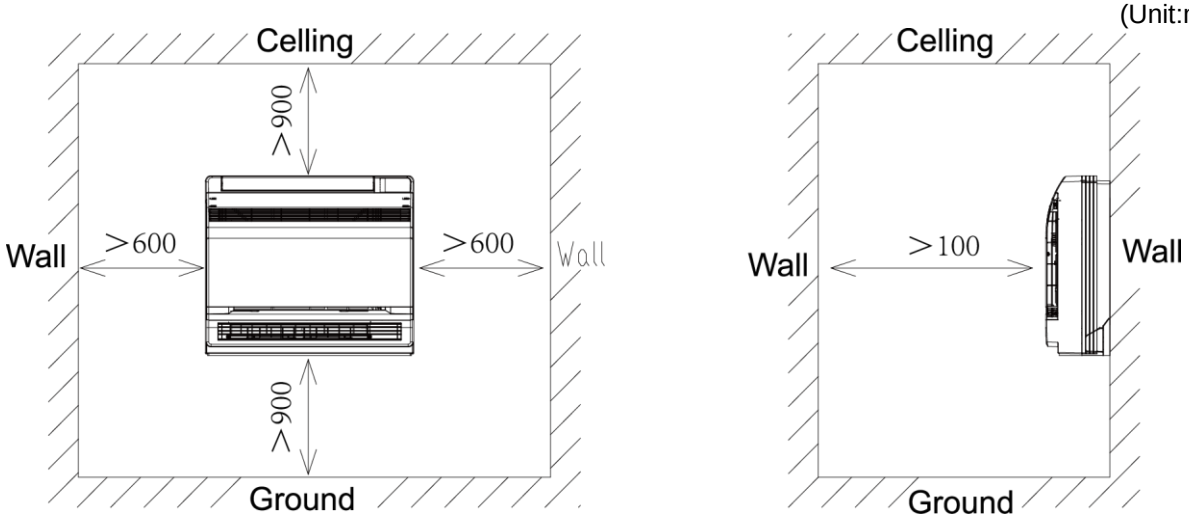

3.12.3 Installation notice

Connect the ends of the connection pipe with two leading pipes, and then tighten the joint nuts tightly.

Connect the connect pipe with the two relative leading pipe, tie the nut on tie –in of the connect pipe tightly.

Notes:

③ Be careful in bending the connection pipes, or you would damage the pipes.

④ If the tightening torque for the flare nut is too great, leakage would happen.

3.12.4 Selection of air switch and power cord

Model	Power Cord Size	Air Switch apacity (A)	Minimum Sectional Area of Ground Wire (mm^2/AWG)	Minimum Sectional Area of Power Cord (mm^2/AWG)
GMV-ND22C/A-T, GMV-ND28C/A-T GMV-ND36C/A-T, GMV-ND45C/A-T GMV-ND50C/A-T	220-240V ~ 50Hz	6	1.0/AWG18	1.0/AWG18

3.13 Installation of Super High Static Pressure Duct Type Indoor Unit

3.13.1 Outline and installation dimension

Model： GMV-ND22PHS/B-T~ GMV-ND160PHS/B-T

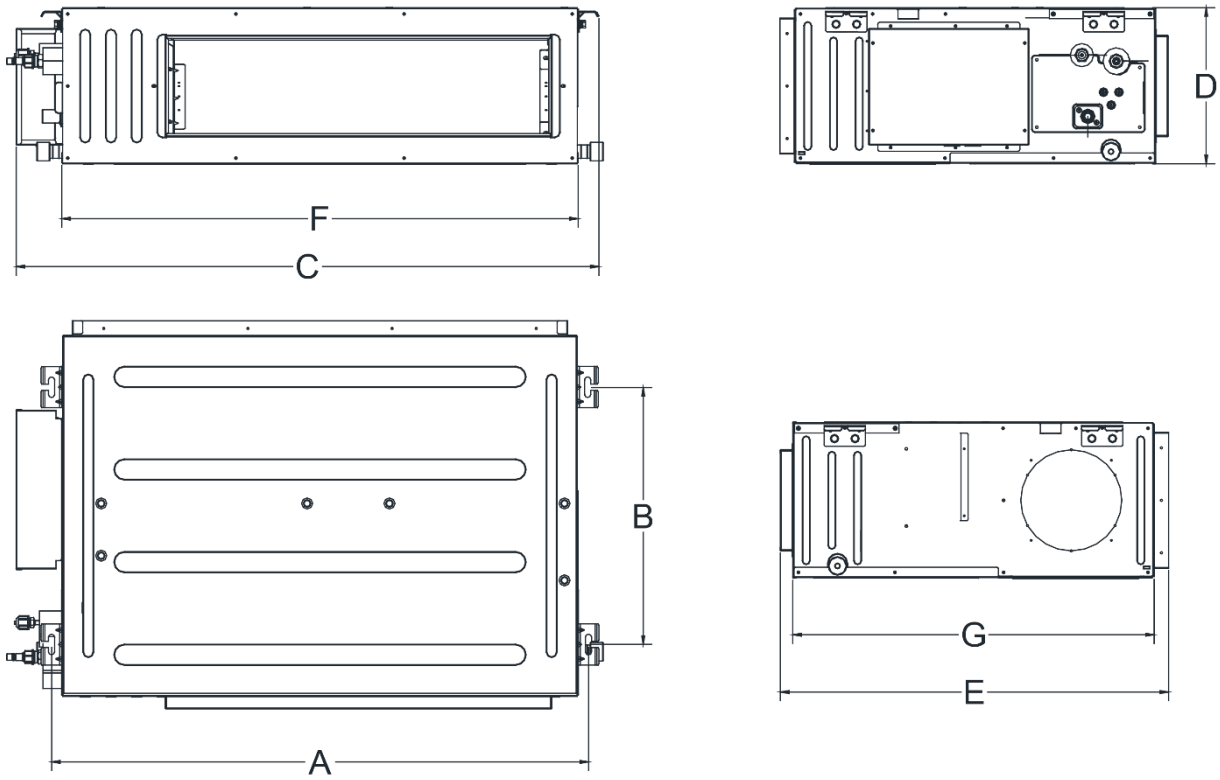

Below are dimensions of A, B, C, etc. for different models:

Unit: mm/inch

Model	A	B	C	D	E	F	G
GMV-ND22~50PHS/B-T	740	500	830	300	754	700	700
GMV-ND56~80PHS/B-T	1040	500	1130	300	754	1000	700
GMV-ND90~160PHS/B-T	1440	500	1530	300	754	1400	700

3.13.2 Installation space

Model： GMV-ND22PHS/B-T~ GMV-ND160PHS/B-T

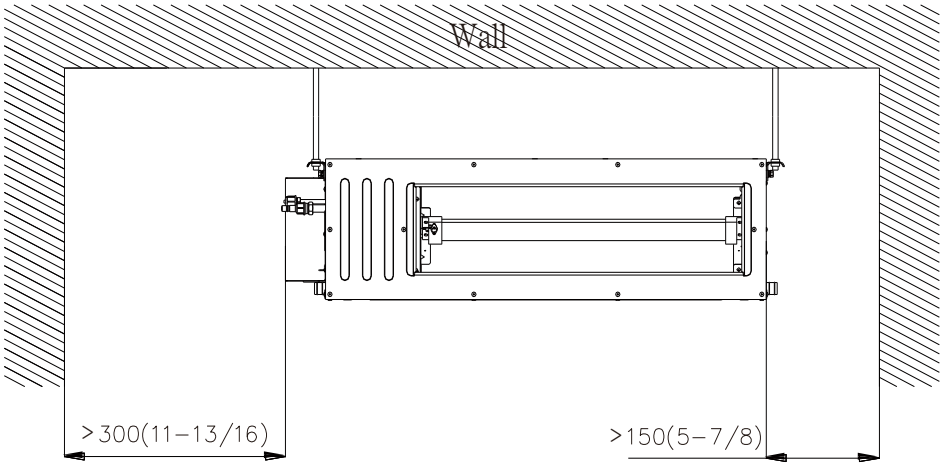

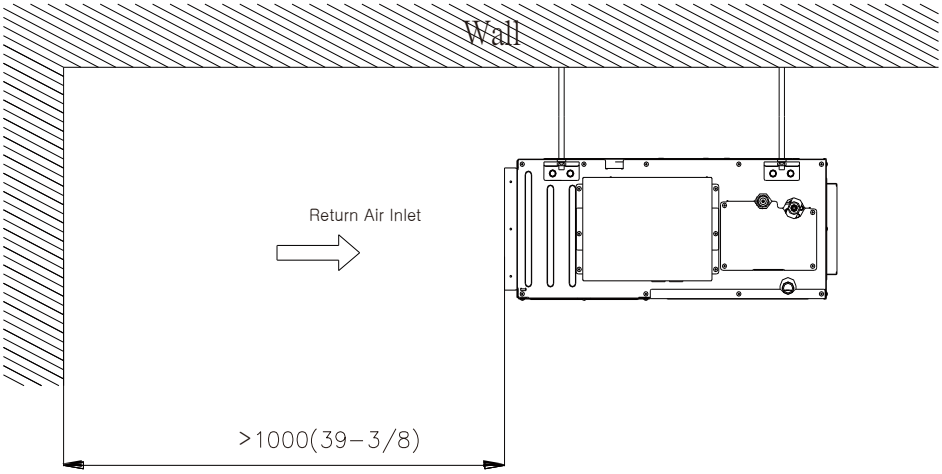

3.13.3 Installation notice

◆The unit shall be installed by the professional personnel according to this installation instruction to ensure proper use.

◆Please contact the local Gree appointed service center before installation. Any malfunctioncaused by the unit that is not installed by the Gree appointed service center would probably not be dealt with on time because of the inconvenience of the business contact.

◆It should be guided under the professional personnel when the air conditioner unit is moved to other place.

◆Installation of the unit must be in accordance with National Electric Codes and local regulations.

◆Improper installation will affect unit's performance, so do not install the unit by yourself. Please contact local dealer to arrange professional technicians for the installation.

◆Do not connect power until all installation work is finished.

◆If the supply cord is damaged, it must be replaced by the manufacturer or its service agent or a similarly qualified person in order to avoid a hazard.

3.13.4 Selection of air switch and power cord

Model	Power Cord Size	Air Switch apacity (A)	Minimum Sectional Area of Ground Wire (mm^2/AWG)	Minimum Sectional Area of Power Cord (mm^2/AWG)
GMV-ND22PHS/B-T	220~240V/50Hz 208~230V/60Hz	6	1.0/AWG18	1.0/AWG18
GMV-ND25PHS/B-T	220~240V/50Hz 208~230V/60Hz	6	1.0/AWG18	1.0/AWG18
GMV-ND28PHS/B-T	220~240V/50Hz 208~230V/60Hz	6	1.0/AWG18	1.0/AWG18
GMV-ND32PHS/B-T	220~240V/50Hz 208~230V/60Hz	6	1.0/AWG18	1.0/AWG18
GMV-ND36PHS/B-T	220~240V/50Hz 208~230V/60Hz	6	1.0/AWG18	1.0/AWG18
GMV-ND40PHS/B-T	220~240V/50Hz 208~230V/60Hz	6	1.0/AWG18	1.0/AWG18
GMV-ND45PHS/B-T	220~240V/50Hz 208~230V/60Hz	6	1.0/AWG18	1.0/AWG18
GMV-ND50PHS/B-T	220~240V/50Hz 208~230V/60Hz	6	1.0/AWG18	1.0/AWG18
GMV-ND56PHS/B-T	220~240V/50Hz 208~230V/60Hz	6	1.0/AWG18	1.0/AWG18
GMV-ND63PHS/B-T	220~240V/50Hz 208~230V/60Hz	6	1.0/AWG18	1.0/AWG18
GMV-ND71PHS/B-T	220~240V/50Hz 208~230V/60Hz	6	1.0/AWG18	1.0/AWG18
GMV-ND80PHS/B-T	220~240V/50Hz 208~230V/60Hz	6	1.0/AWG18	1.0/AWG18
GMV-ND90PHS/B-T	220~240V/50Hz 208~230V/60Hz	6	1.0/AWG18	1.0/AWG18
GMV-ND100PHS/B-T	220~240V/50Hz 208~230V/60Hz	6	1.0/AWG18	1.0/AWG18
GMV-ND112PHS/B-T	220~240V/50Hz 208~230V/60Hz	6	1.0/AWG18	1.0/AWG18
GMV-ND125PHS/B-T	220~240V/50Hz 208~230V/60Hz	6	1.0/AWG18	1.0/AWG18
GMV-ND140PHS/B-T	220~240V/50Hz 208~230V/60Hz	6	1.0/AWG18	1.0/AWG18
GMV-ND160PHS/B-T	220~240V/50Hz 208~230V/60Hz	6	1.0/AWG18	1.0/AWG18

4 Installation of drain pipe

4.1 Precautions When Doing the Piping Work

◆ Keep piping as short as possible and slope it downwards at a gradient of at least 1/100 so that air may not remain trapped inside the pipe.

For example:

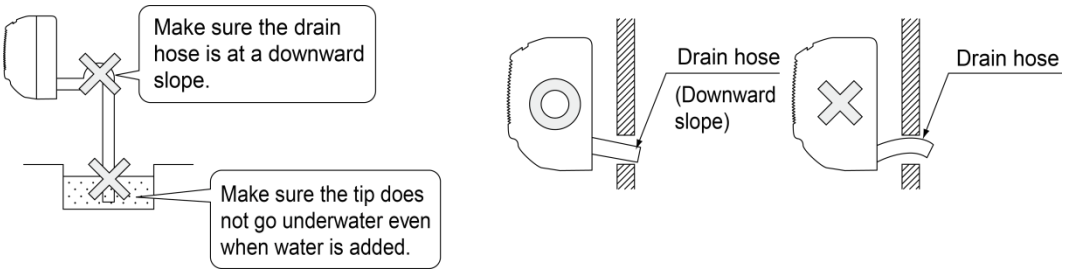

◆Keep pipe size equal to or greater than that of the connecting pipe.

◆Install the drain piping as shown and take measures against condensation. Improperly rigged piping could lead to leaks and eventually wet furniture and belongings.

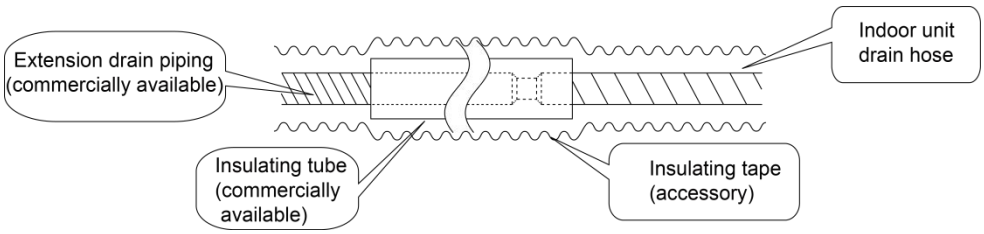

◆When directly connecting a hard vinyl chloride pipe joint to the drain hose connected to the indoor unit, use a commercially available hard vinyl chloride pipe joint (nominal diameter 13mm).

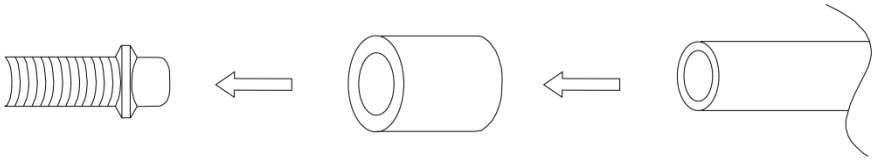

Drain hose connected to the indoor unit | Commercially available hard vinyl chloride pipe joint (nominal diameter 13mm) | Commercially available hard vinyl chloride pipe (nominal diameter 13mm)

◆Drain hose connectedto the indoor unitCommercially availablehard vinyl chloride pipejoint (nominal diameter 13mm)Commercially availablehard vinyl chloride pipe(nominal diameter 13mm)

◆Do not connect the drain piping directly to sewage pipes that smell of ammonia. The ammonia in the sewage might enter the indoor unit through the drain pipes and corrode the heat exchanger.

4.2 Installing the Drain Pipes

◆ Insert the drain hose into the drain outlet, and tighten the clamp securely with tape.

◆Tighten the clamp until the screw head is less then 4 mm from the hose.

①. Metal clamp (accessory)
②. Drain hose (accessory)
③. Grey tape (accessory)

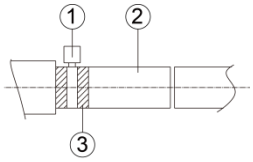

◆Insulate the pipe clamp and the drain hose using heat insulation sponge.

①. Metal clamp (accessory)
② Insulation sponge (accessory)

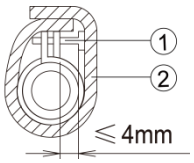

◆If the air flow of indoor unit is high, this might cause negative pressure and result in return suction of outdoor air. Therefore, U-type water trap shall be designed on the drainage side of each indoor unit.

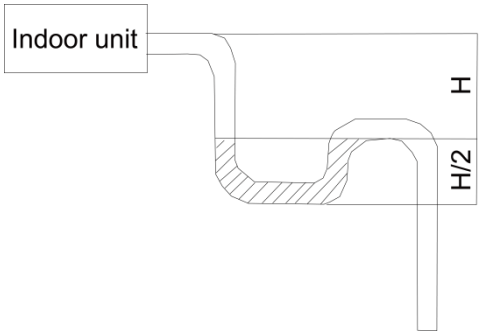

◆ Install water trap as shown below

◆ Install one water trap for each unit

◆Installation of water trap shall consider easy cleaning in the future.

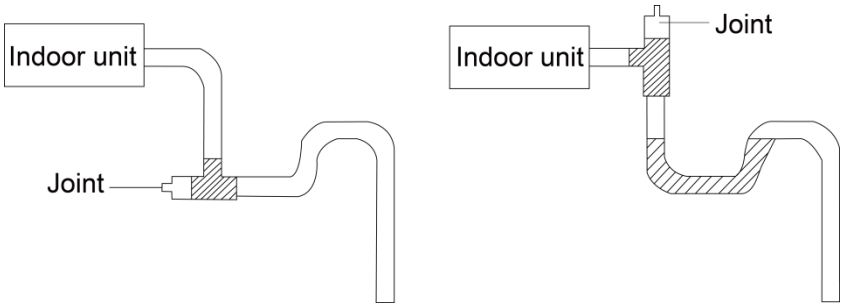

◆Connection of drainage branch pipe to the standpipe or horizontal pipe of drainage main pipe

◆The horizontal pipe cannot be connected to the vertical pipe at a same height. It can be connected in a manner as shown below:

N01:3-way connection of drainage pipe joint

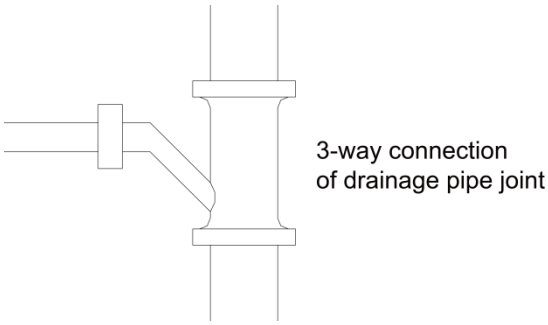

NO2: Connection of drain elbow

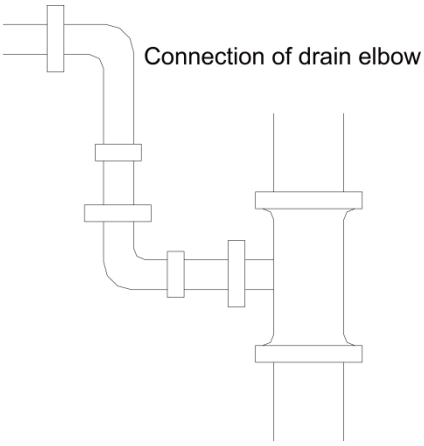

NO3: Connection of horizontal pipe

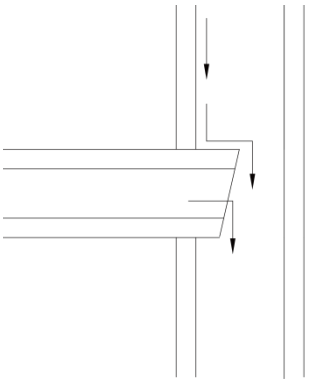

Connection of horizontal pipe

◆ When unifying multiple drain pipes, install the pipes as shown below. Select converging drain pipes whose gauge is suitable for the operating capacity of the unit.(take the cassette type unit for example)

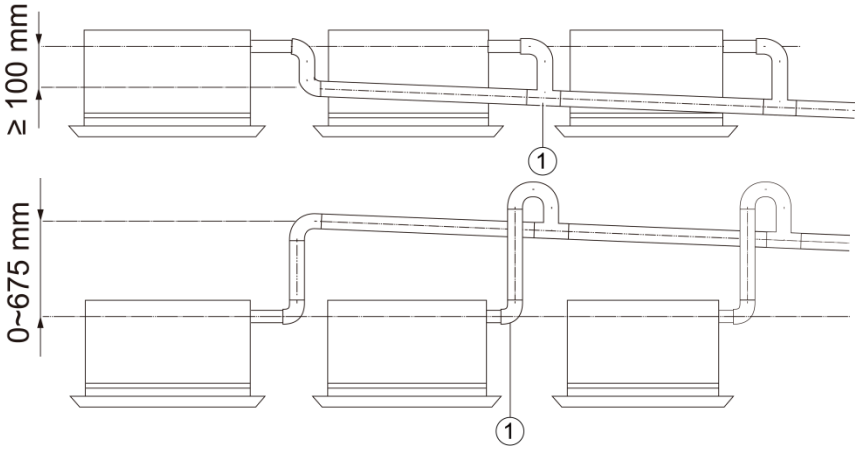

4.3 Precautions when doing riser piping work

◆Make sure that heat insulation work is executed on the following 2 spots to prevent any possible water leakage due to dew condensation.

a) Connect the drain hose to the drain raiser pipe, and insulate them.

b) Connect the drain hose to the drain outlet on the indoor unit, and tighten it with the clamp.

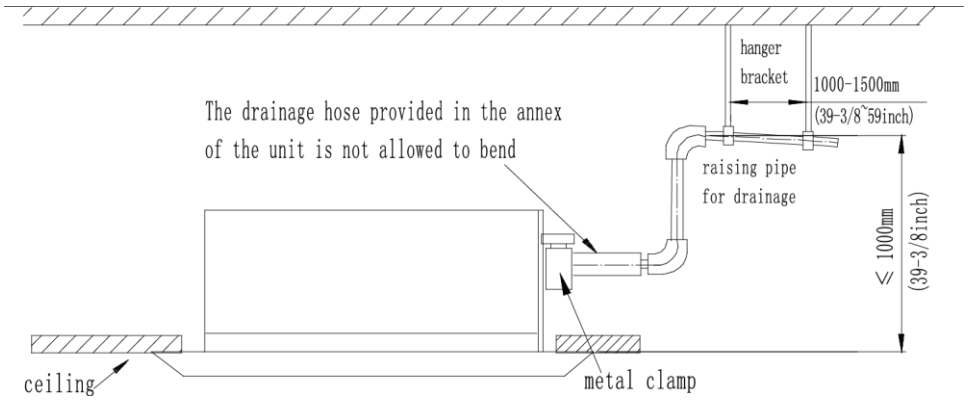

◆Secure a downward gradient of 1/100 or more for the drain pipe. To accomplish this, mount supporting brackets at an interval of 1 - 1.5 m.(take the cassette type unit for example)

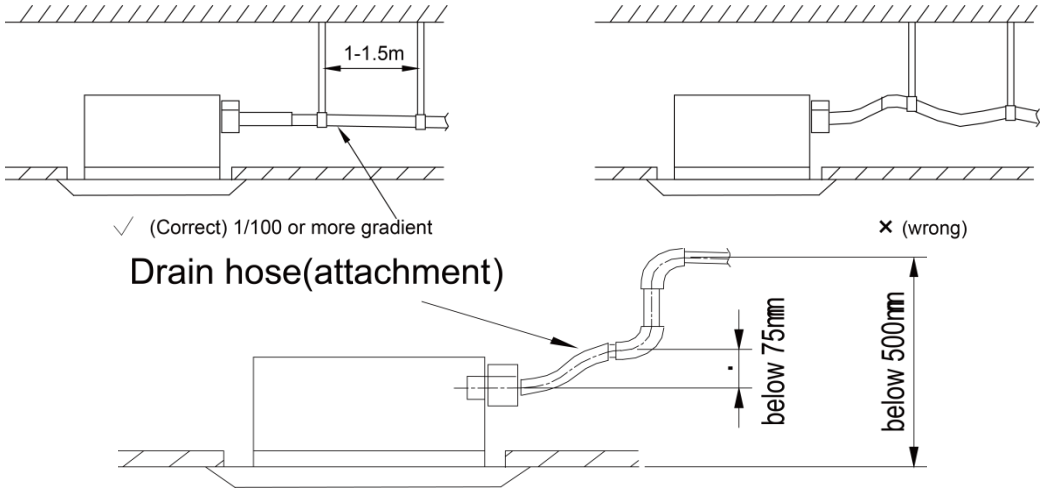

4.4 Testing of Drain Piping

◆ After piping work is finished, check if drainage flows smoothly.

◆Shown in the figure, Add approximately 1liter of water slowly into the drain pan and check drainage flow during COOL running.

5 Electrical Installation

◆The wiring must be in accordance with the local rules.

◆Rated supply voltage and special circuit for air conditioner must be used.

◆Do not pull the power cord forcefully.

◆All the electric installations must be carried out by specialist technicians in accordance with the local laws, rules and these instructions.

◆The diameter of flexible wire should be wide enough. Replace the damaged power cord and connecting wire with special flexible wire.

◆The earthing shall be reliable and connected to the special earthing device on the construction. The installation must be done by specialist technicians. The leak protection switch and air switch with enough capacity must be installed. The air switch shall have both the magnetic tripping and thermal tripping functions to ensure protection against the short circuit and overload.

● Earthed Requirements

◆The air conditioner belongs to I type electric appliances. The reliable earthed action is a must.

◆The yellow and green wire inside the air conditioner is the earthed wire. Do not use it for other purpose or even cut off it. Do not fix it with tapping screw,. Otherwise, it may cause electric shock.

◆The earthed resistance must meet the requirements of national standard GB17790.

◆There should be reliable earthed terminal for the power supply. Never connect the earth lead to the following articles:

①water pipe; ②gas pipe; ③drain pipe; ④unreliable place considered by professionals.

MAINTENANCE

MAINTENANCE

1 Troubleshooting

1.1 Malfunction list for the wired controller

Display code	Content	Display code	Content	Display code	Content
L0	Malfunction of indoor unit	L9	Wrong number of indoor unit for one-to-more indoor unit	d8	Malfunction of water temperature sensor
L1	Indoor fan protection	LA	Wrong series for one-to-more indoor unit	d9	Malfunction of jumper cap
L2	E-heater protection	LH	Alarming due to bad air quality	dA	Abnormal address for indoor unit
L3	Water overflow protection	LC	The indoor unit model can't match with outdoor unit model	dH	Abnormal PCB for wired controller
L4	Power supply of wired controller is faulted	d1	Poor indoor PCB	dC	Abnormal code-dialing setting of capacity
L5	Freeze prevention protection	d3	Malfunction of ambient temperature sensor	dL	Malfunction of air exhause temperature sensor
L6	Mode shock	d4	Malfunction of entry tube temperature sensor	dE	Malfunction of indoor C02 sensor
L7	No main indoor unit	d6	Malfunction of exit tube temperature sensor	C0	Communication malfunction
L8	Insufficient power supply	d7	Malfunction of humidity sensor	AJ	Clean alarming for filter
db	Special code: engineering debugging code				

2 After-sales Emergency Masures

When some unrecoverable fault occurs to one module which is connected with several others in parallel, the following emergency measures are recommended to guarantee the heating or cooling capacity of the indoor units and the service life of modules except the faulted one are not affected.

Step 1: set all indoor units under "Off" mode and cut off the power supply to the indoor and outdoor units.

Step 2:.shut off all cutoff valves of the faulted outdoor unit, including the cutoff valves of the liquid/gas pipe as well as the oil balancing valve.

Step 3: cut off the air switch of the module.

Step 4: remove the communication line between the faulted module and other modules which are still kept connected through the communication line.

Step 5: readjust the address and quantity settings on the main board of the modules except the faulted one.

Step 6: power and restart the unit.

3 Wiring Diagram

NOTE:

This drawing is just for reference; please always refer to the electric wiring stuck to the unit for actual wiring.

3.1 Floor Standing Type

GMV-ND100L/A-T, GMV-ND140L/A-T

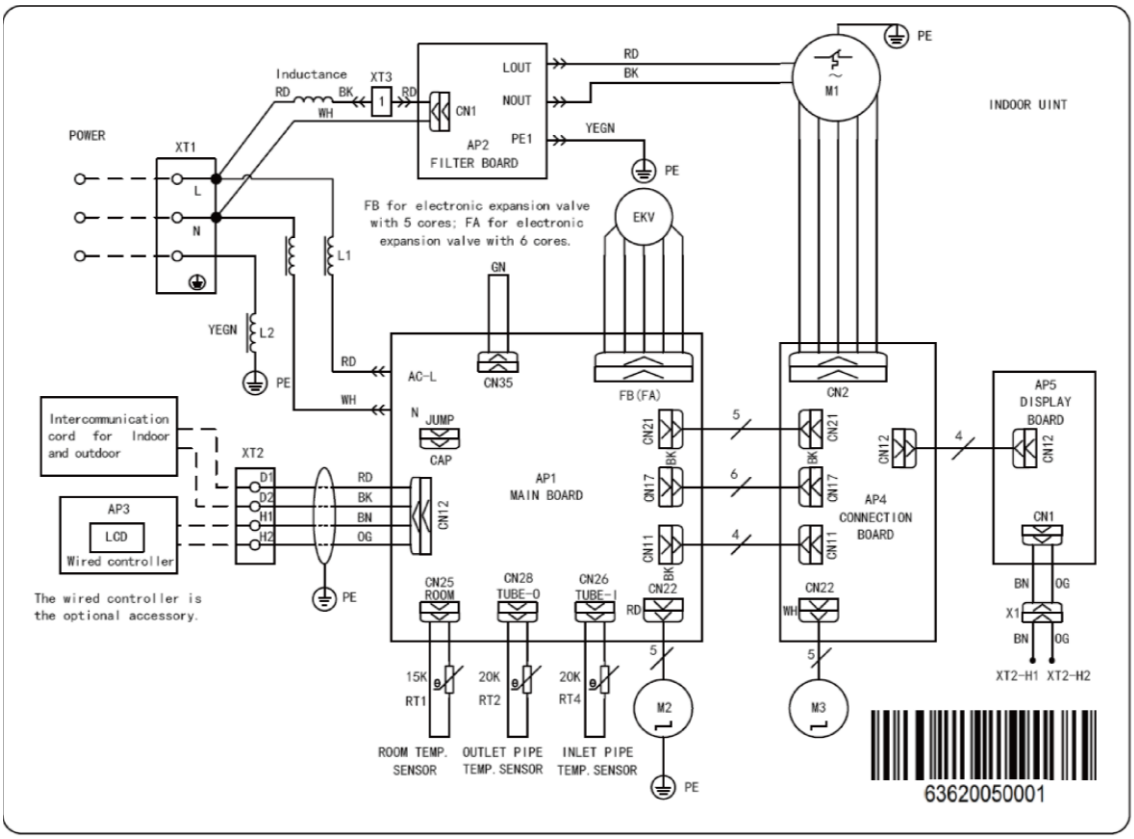

3.2 High Static Pressure Duct Type

GMV-ND56PHS/A-T、GMV-ND63PHS/A-T、GMV-ND71PHS/A-T、GMV-ND80PHS/A-T、GMV-ND90PHS/A-T、GMV-ND100PHS/A-T、GMV-ND112PHS/A-T、GMV-ND125PHS/A-T、GMV-ND140PHS/A-T：

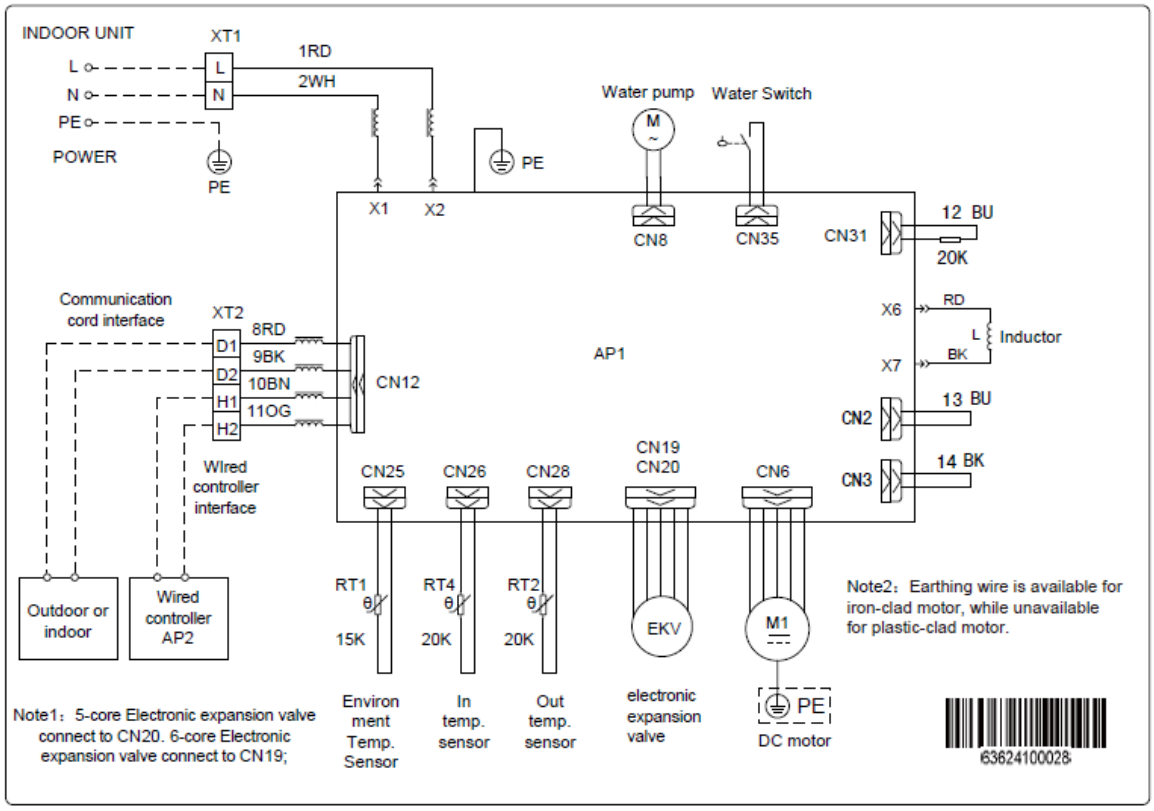

GMV-ND160PHS/A-T：

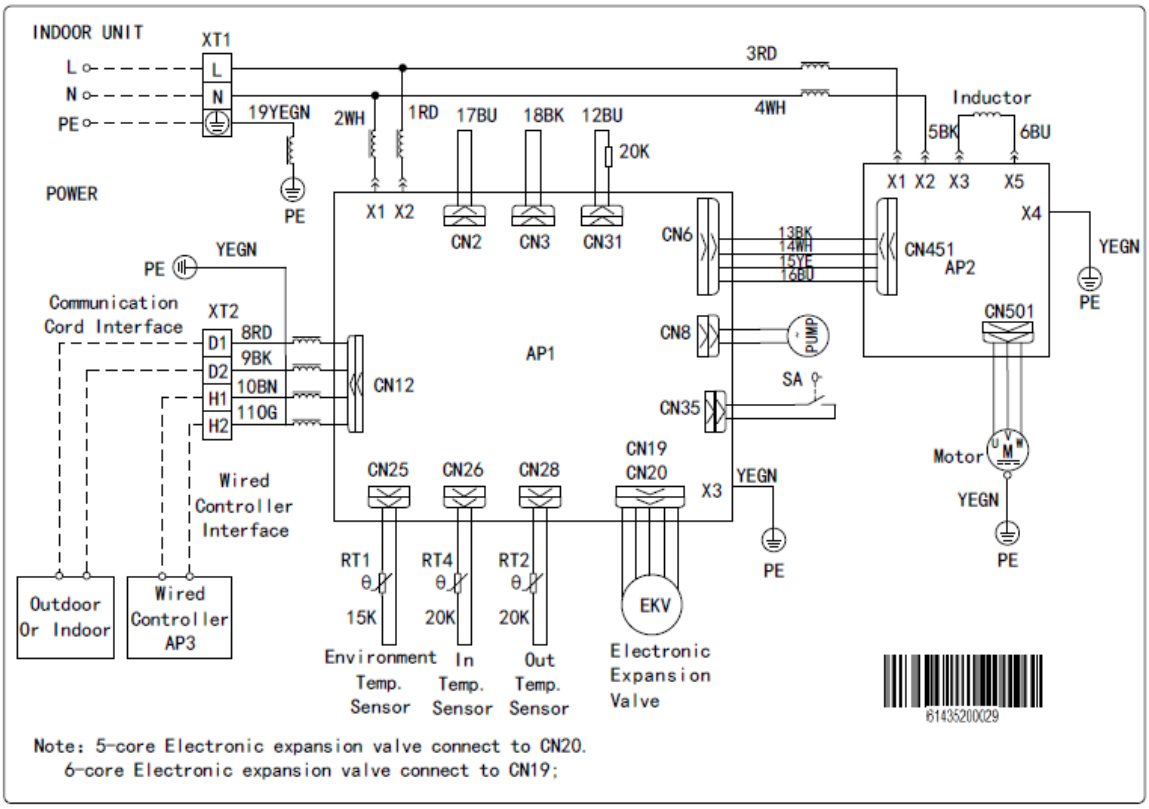

Note: 5-core Electronic expansion valve connect to CN20.
6-core Electronic expansion valve connect to CN19;

GMV-ND224PH/A-T、GMV-ND280PH/A-T：

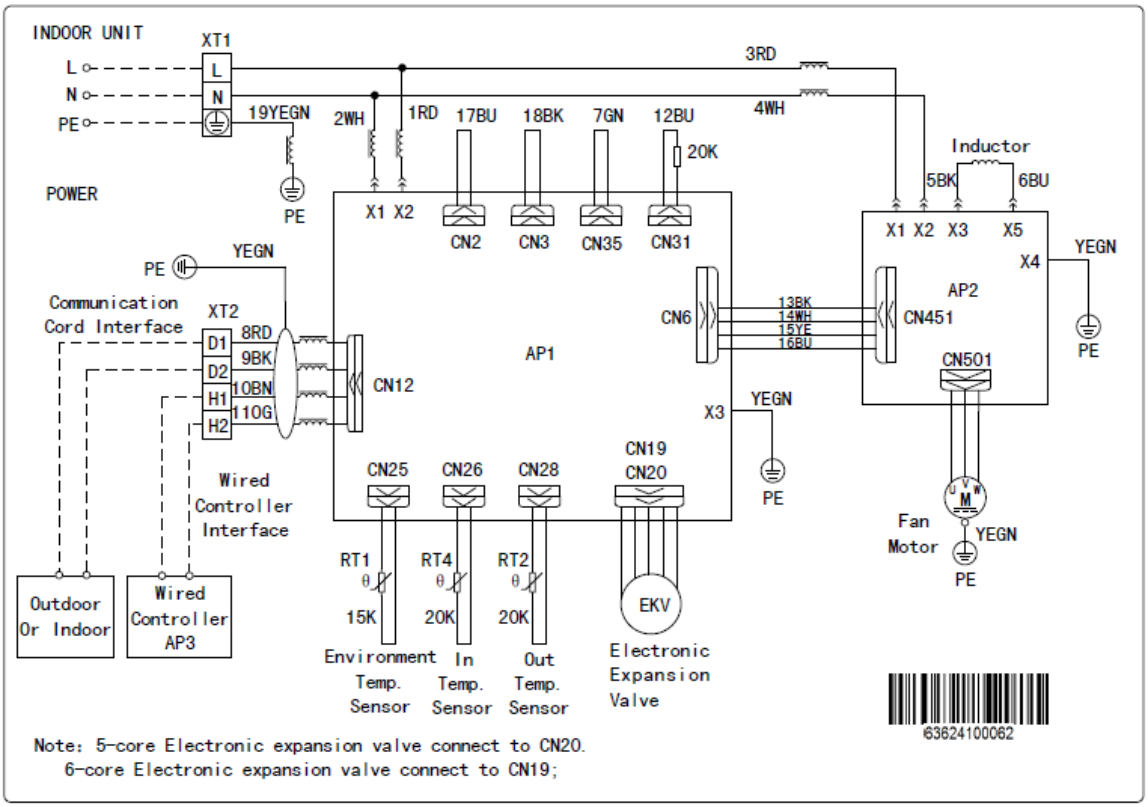

Note: 5-core Electronic expansion valve connect to CN20.
6-core Electronic expansion valve connect to CN19;

3.3 Low Static Pressure Duct Type

GMV-ND22PLS/A-T、GMV-ND25PLS/A-T、GMV-ND28PLS/A-T、GMV-ND32PLS/A-T GMV-ND36PLS/A-T、GMV-ND40PLS/A-T、GMV-ND45PLS/A-T、GMV-ND50PLS/A-T、GMV-ND56PLS/A-T、GMV-ND63PLS/A-T、GMV-ND71PLS/A-T、GMV-ND80PLS/A-T：

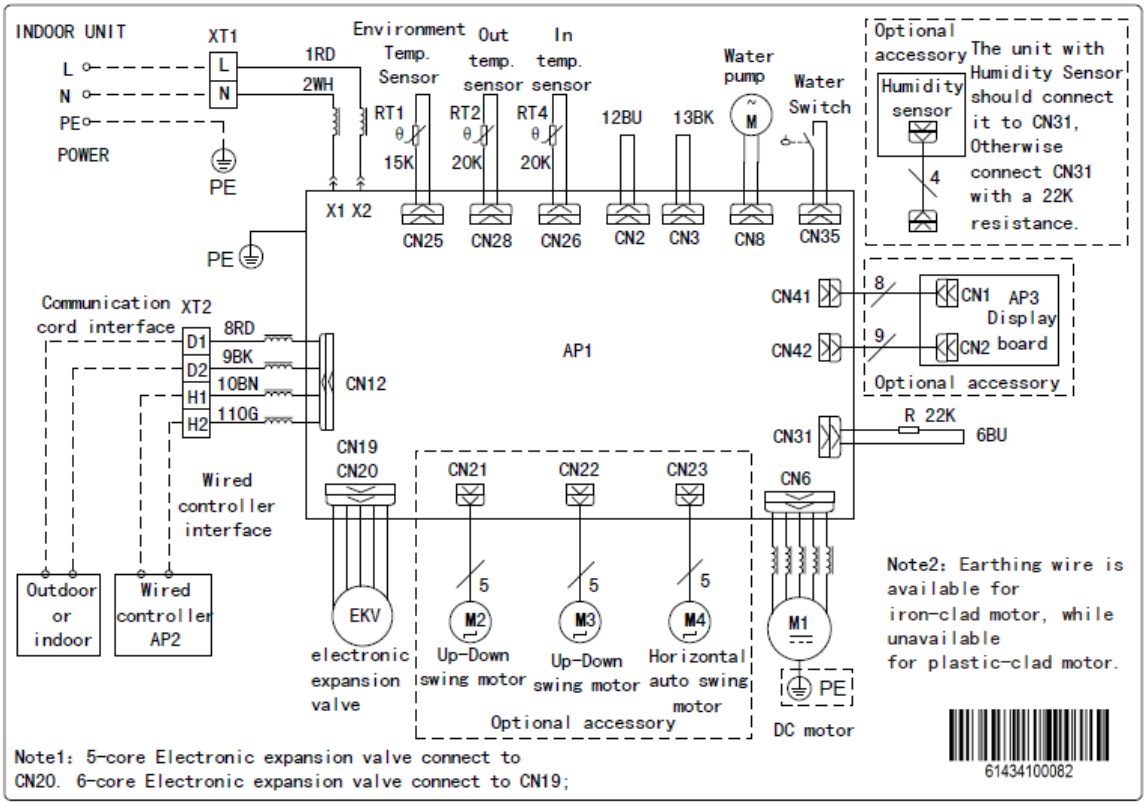

GMV-ND90PLS/A-T 、GMV-ND100PLS/A-T、GMV-ND112PLS/A-T、GMV-ND125PLS/A-T、GMV-ND140PLS/A-T：

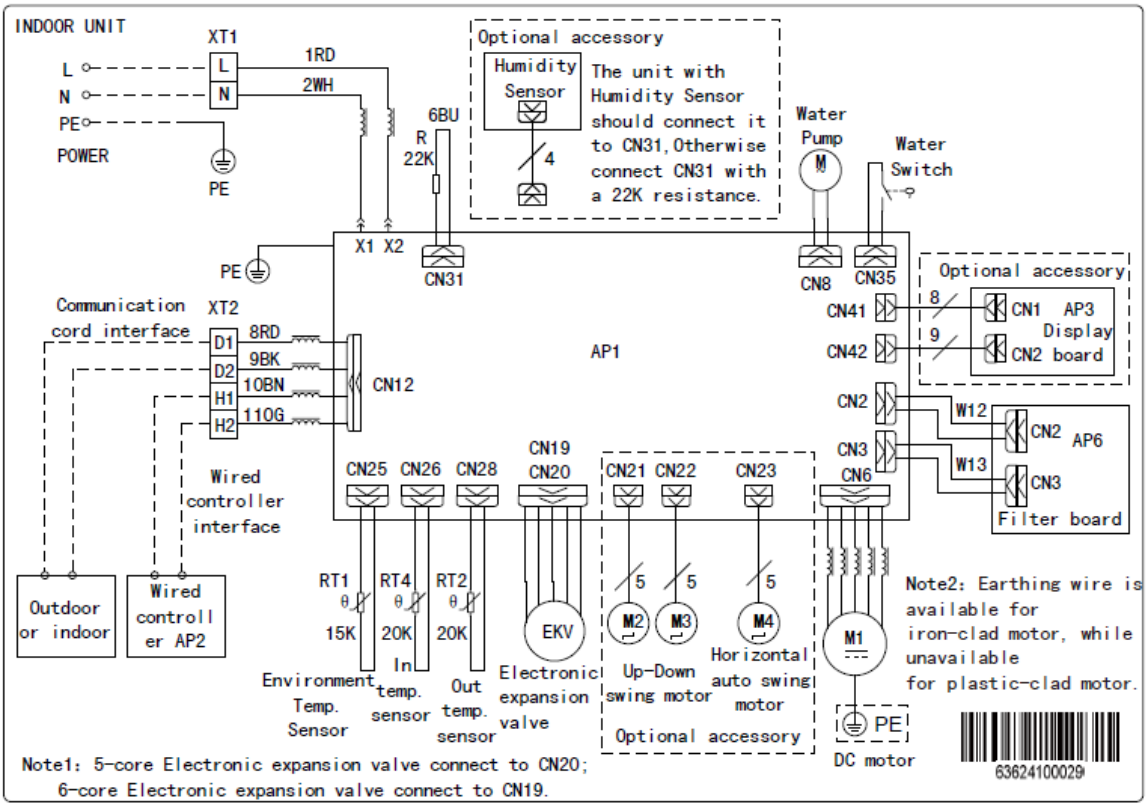

3.4 4-way Cassette Type

GMV-ND28T/A-T、GMV-ND36T/A-T、GMV-ND45T/A-T、GMV-ND50T/A-T、GMV-ND56T/A-T、GMV-ND63T/A-T、GMV-ND71T/A-T、GMV-ND80T/A-T：

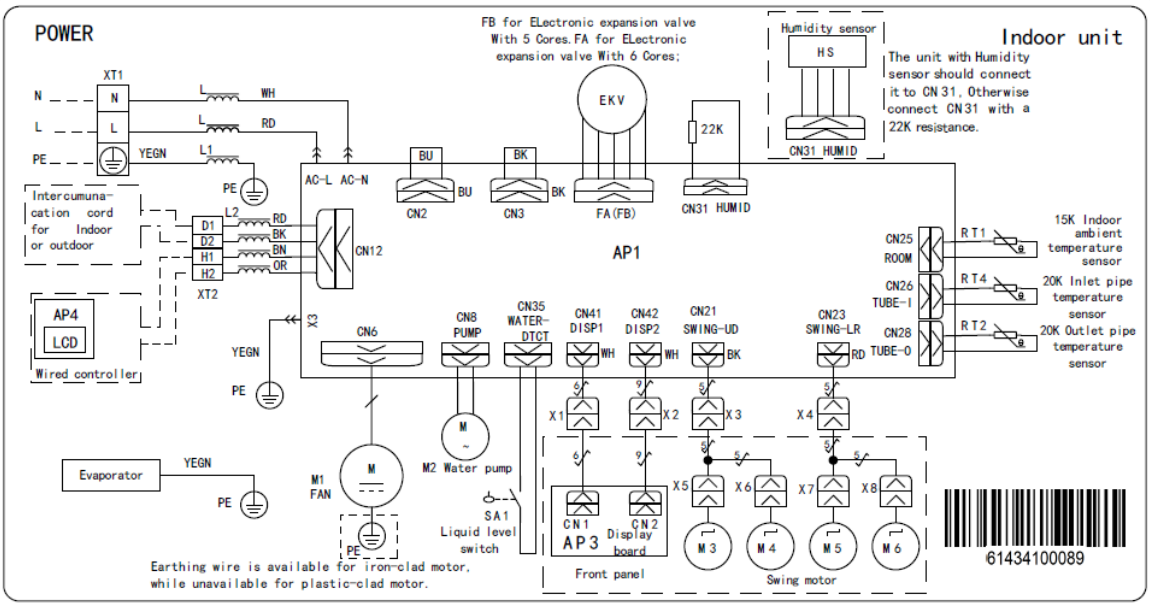

GMV-ND90T/A-T、GMV-ND100T/A-T、GMV-ND112T/A-T、 GMV-ND125T/A-T、GMV-ND140T/A-T：

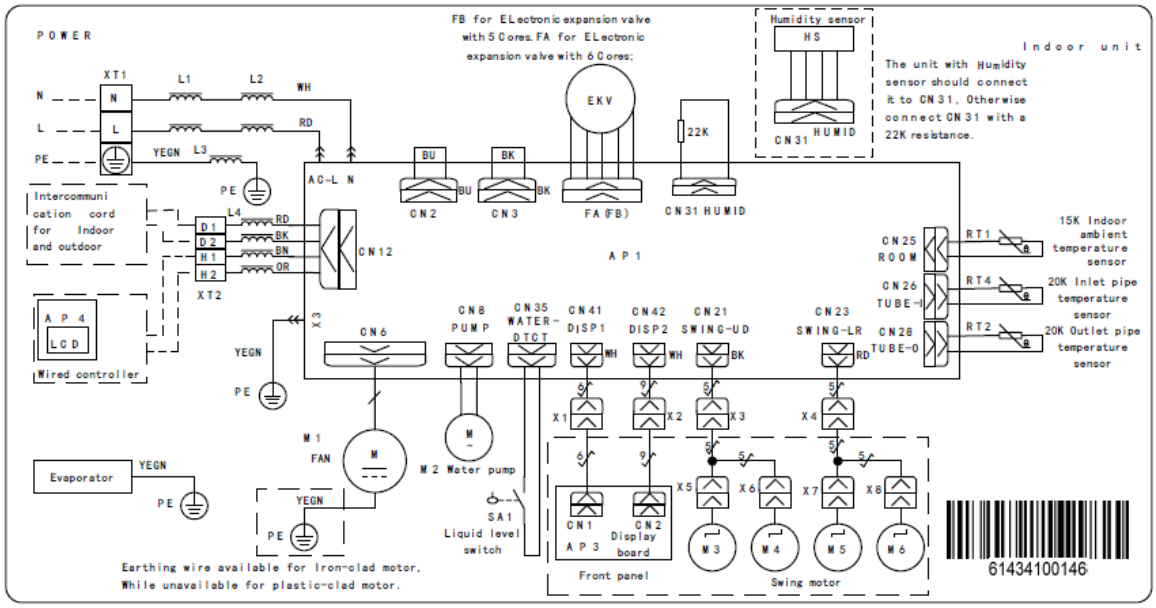

GMV-ND160T/A-T：

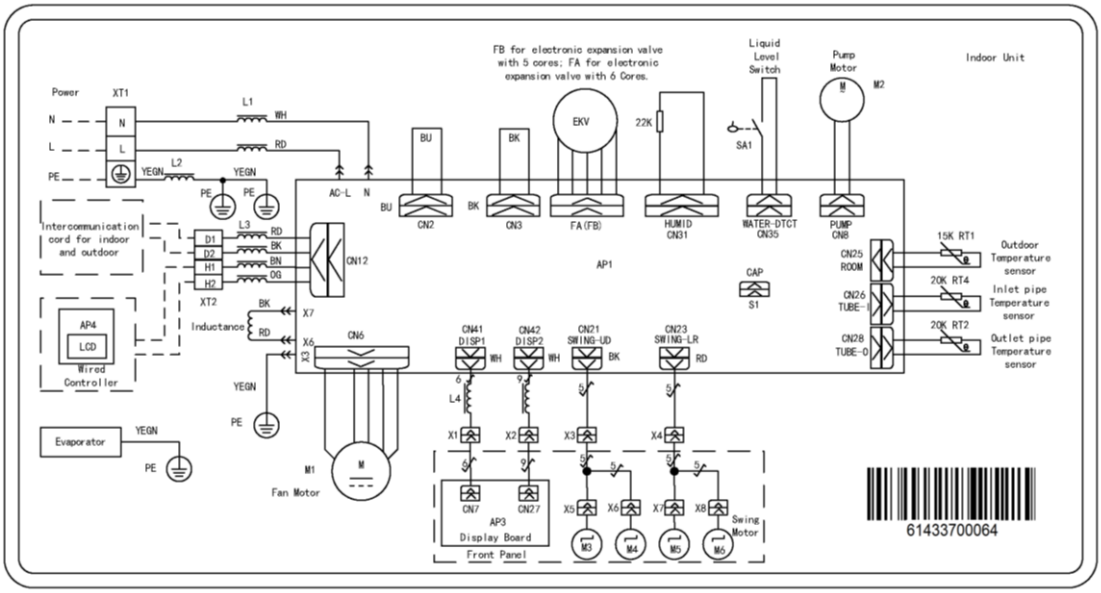

3.5 Compact 4-way Cassette Type

GMV-ND22T/B-T、GMV-ND28T/B-T、GMV-ND36T/B-T、GMV-ND45T/B-T、GMV-ND50T/B-T、GMV-ND56T/B-T

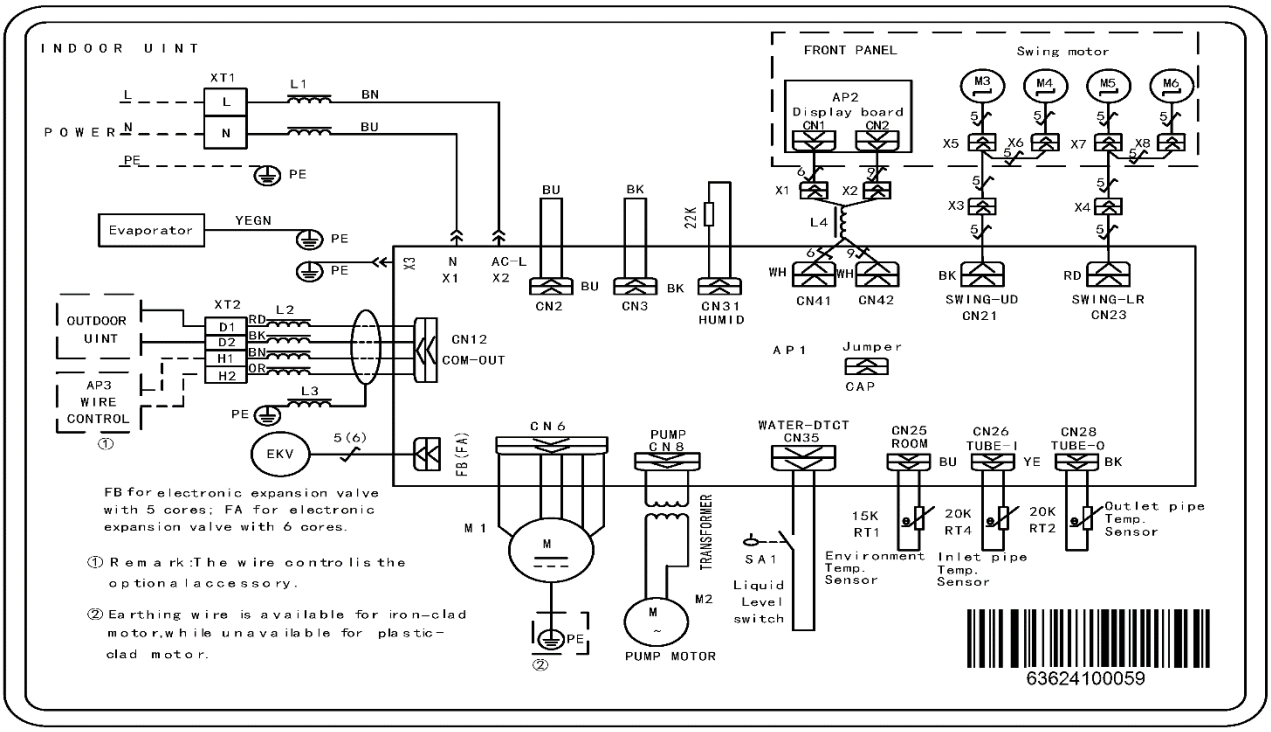

3.6 2-way Cassette Type

GMV-ND28TS/A-T、GMV-ND36TS/A-T、GMV-ND45TS/A-T、GMV-ND50TS/A-T、GMV-ND56TS/A-T、GMV-ND63TS/A-T、GMV-ND71TS/A-T：

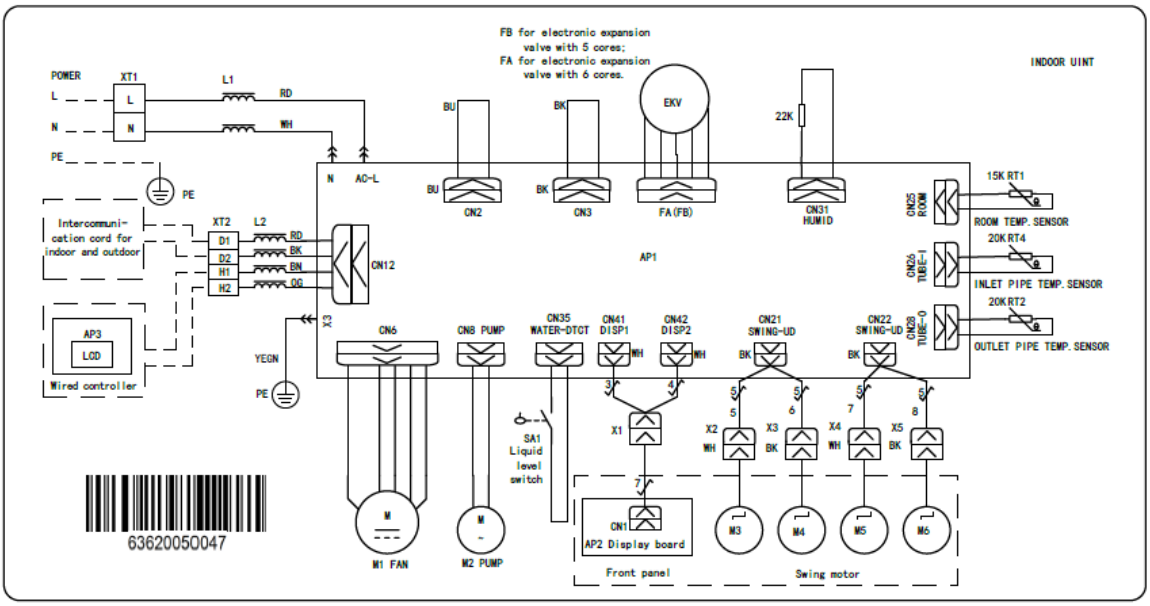

3.7 1-way Cassette Type

GMV-ND22TD/A-T、GMV-ND28TD/A-T、GMV-ND36TD/A-T、GMV-ND45TD/A-T、GMV-ND50TD/A-T

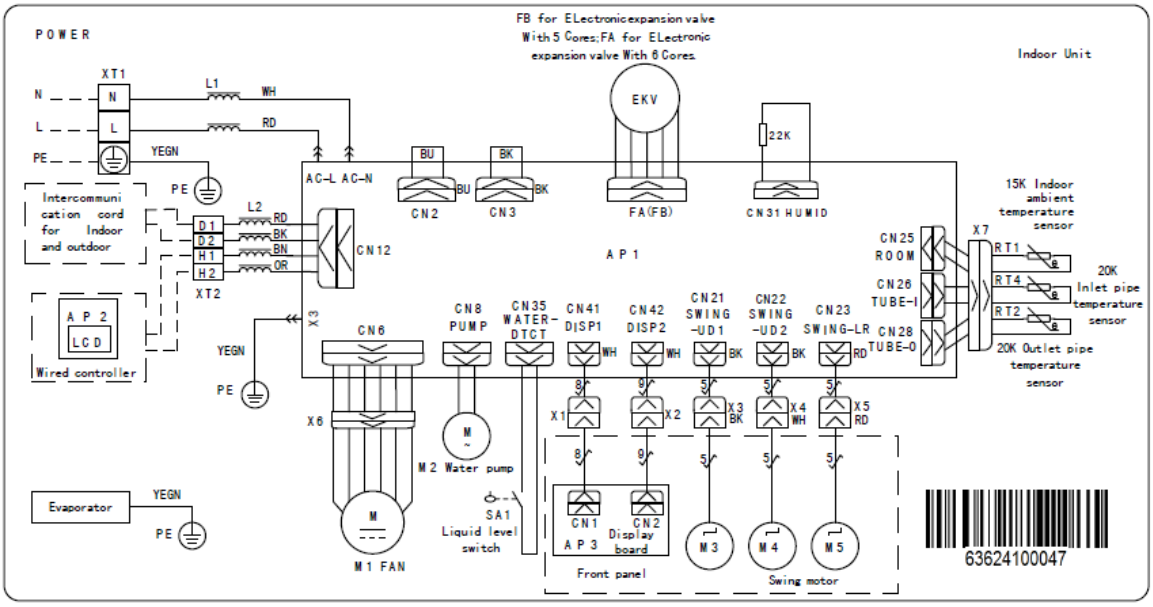

3.8 Floor Ceiling Type

GMV-ND28ZD/A-T、 GMV-ND36ZD/A-T、GMV-ND50ZD/A-T、GMV-ND63ZD/A-T、GMV-ND71ZD/A-T、GMV-ND90ZD/A-T、GMV-ND112ZD/A-T、GMV-ND125ZD/A-T、GMV-ND140ZD/A-T：

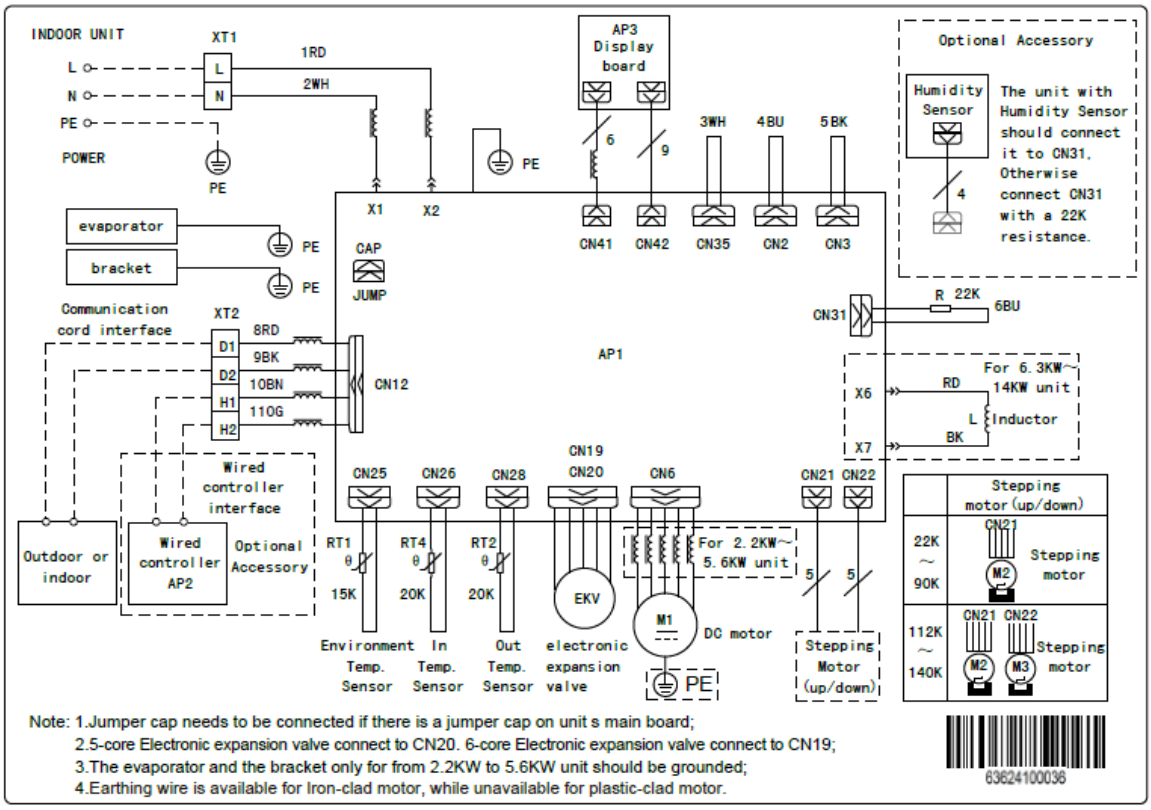

Note: 1.Jumper cap needs to be connected if there is a jumper cap on unit s main board;
2.5-core Electronic expansion valve connect to CN20. 6-core Electronic expansion valve connect to CN19;
3.The evaporator and the bracket only for from 2.2KW to 5.6KW unit should be grounded;
4.Earthing wire is available for Iron-clad motor, while unavailable for plastic-clad motor.

3.9 Fresh air Processing Unit

GMV-NX140P/A(X1.2)-K：

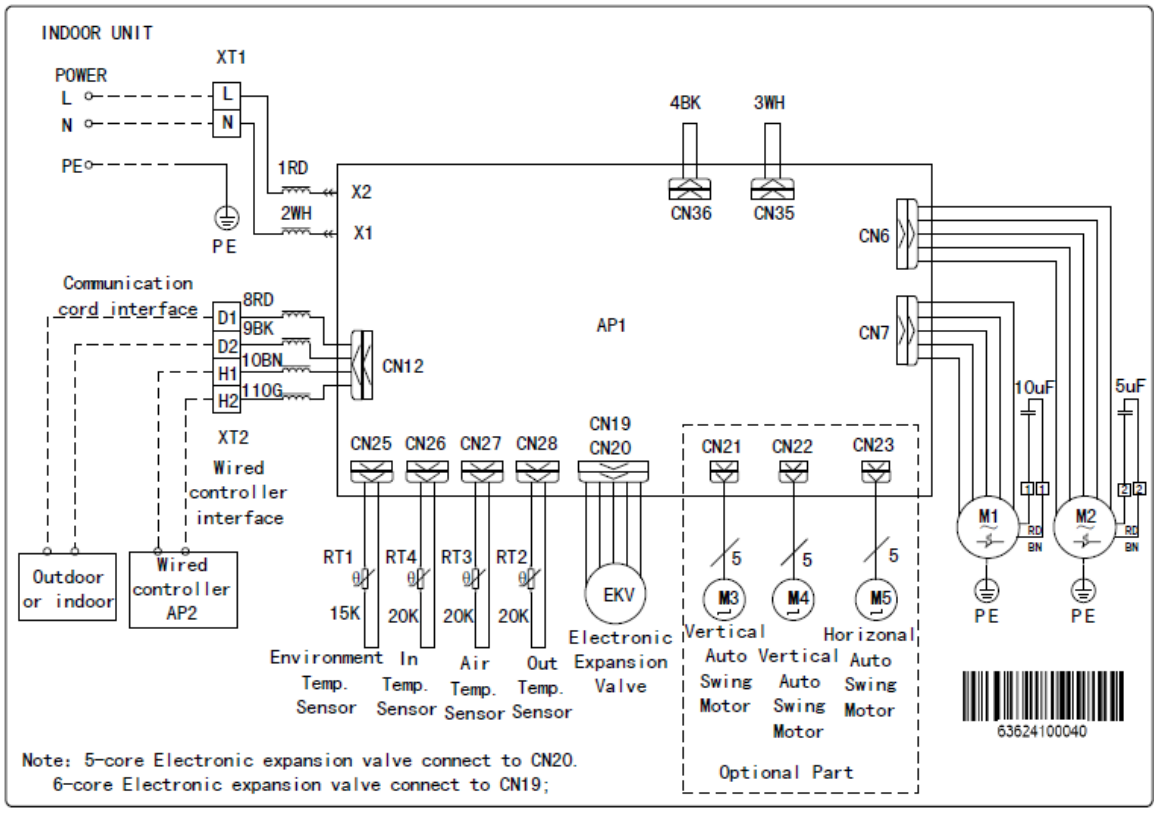

Note: 5-core Electronic expansion valve connect to CN20.
6-core Electronic expansion valve connect to CN19;

GMV-NX224P/A(X2.0)-M、GMV-NX280P/A(X2.5)-M、GMV-NX280P/A(X3.0)-M：

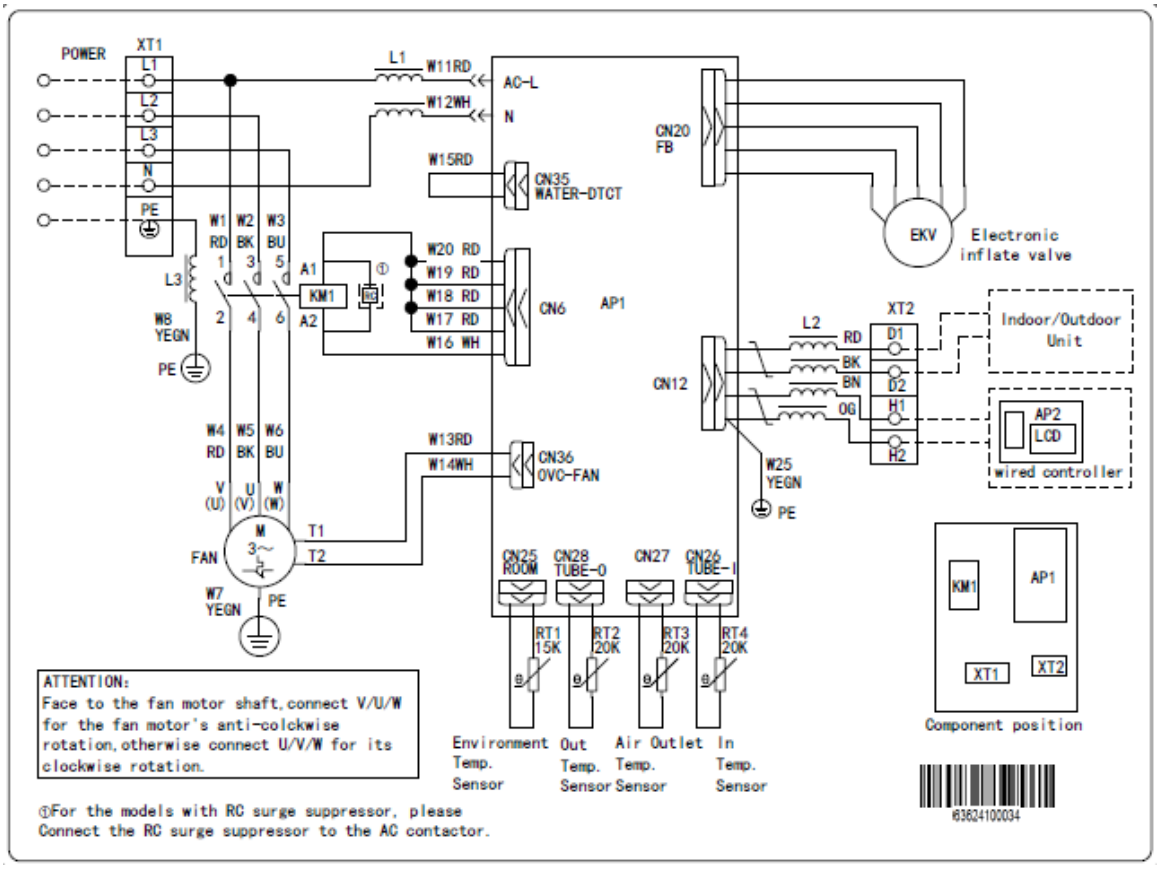

GMV-NX450P/A(X4.0)-M：

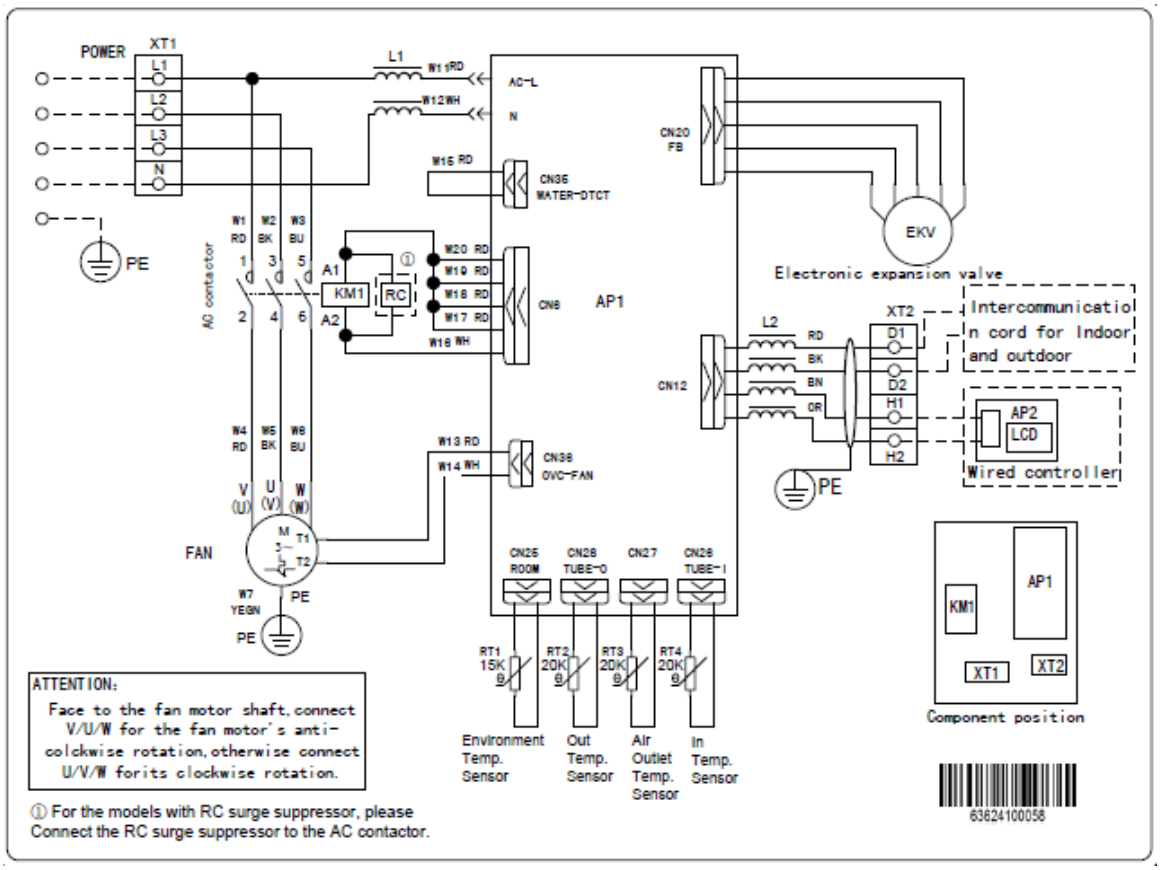

GMV-NDX224P/A-T、GMV-NDX280P/A-T

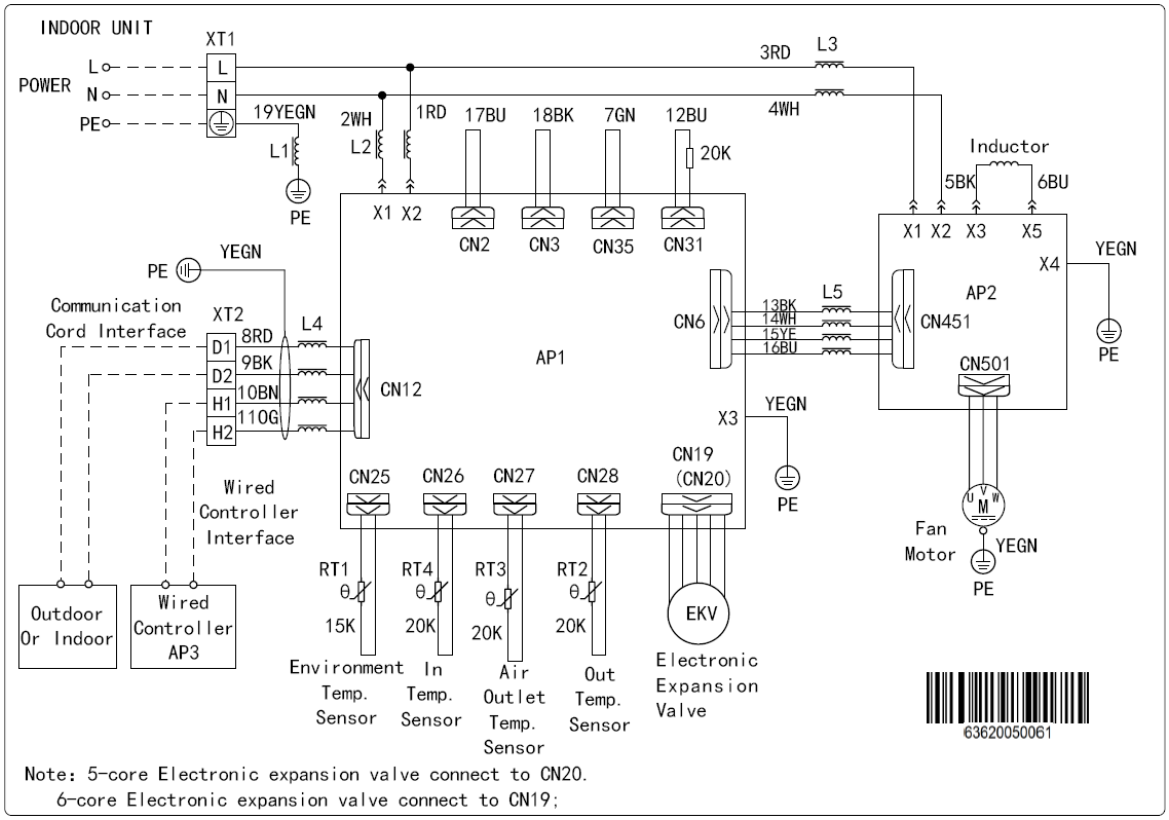

3.10 Slim Duct Type

GMV-ND22PL/B-T、GMV-ND25PL/B-T、GMV-ND28PL/B-T、GMV-ND32PL/B-T、GMV-ND36PL/B-T、GMV-ND40PL/B-T、GMV-ND45PL/B-T、GMV-ND50PL/B-T、GMV-ND56PL/B-T、GMV-ND63PL/B-T、GMV-ND72PL/B-T

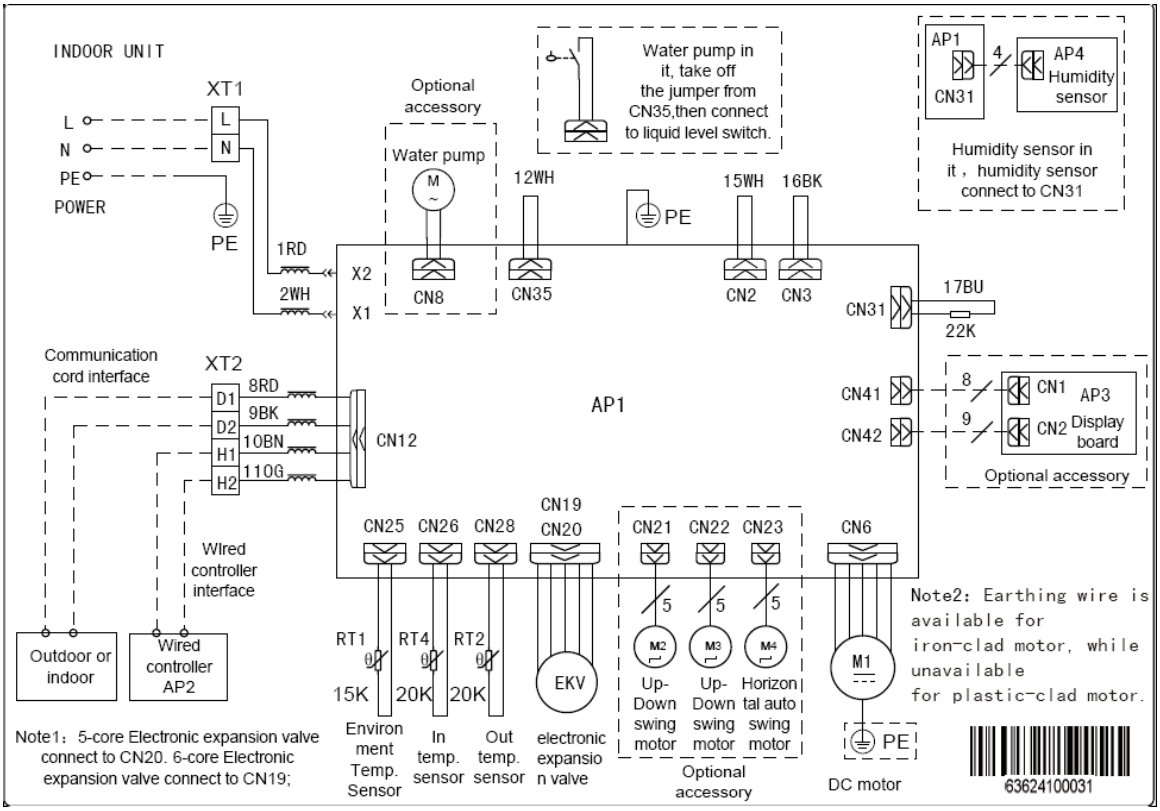

3.11 Air Handler type Indoor Unit

GMV-NR71A/A-D、GMV-NR90A/A-D、GMV-NR100A/A-D、GMV-NR112A/A-D、GMV-NR140A/A-D

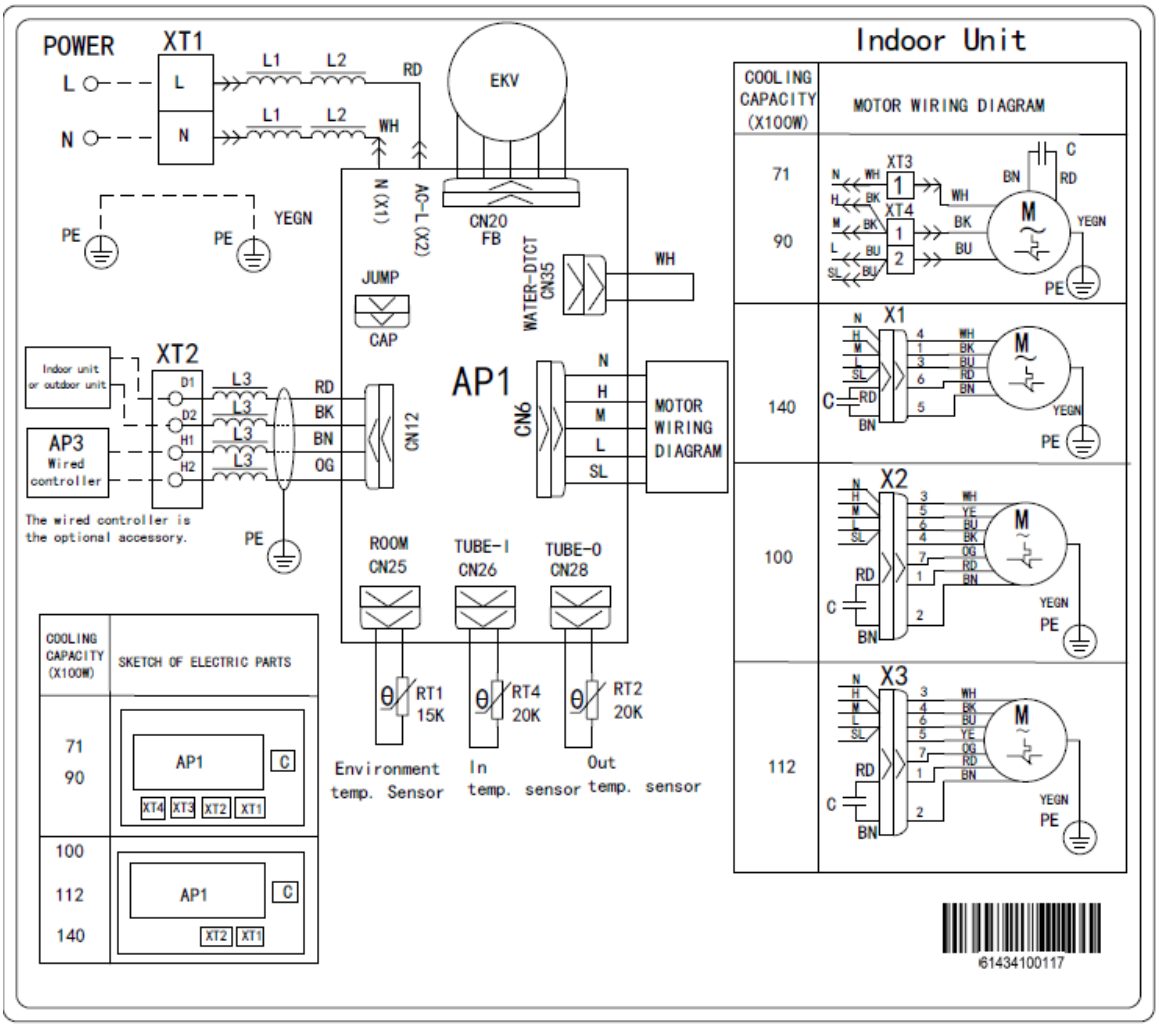

3.12 Console Type Indoor Unit

GMV-ND22C/A-T、GMV-ND28C/A-T、GMV-ND36C/A-T、GMV-ND45C/A-T、GMV-ND50C/A-T

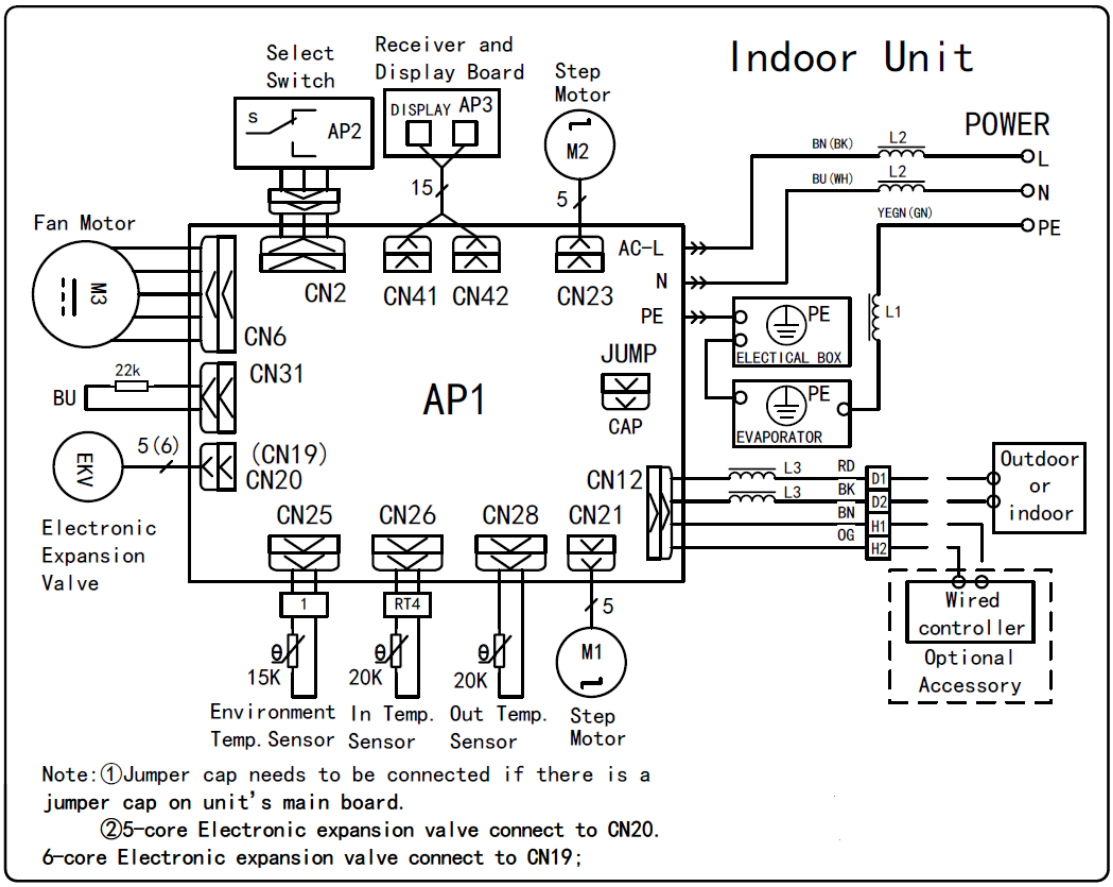

3.13 Wall Mounted type Indoor Unit

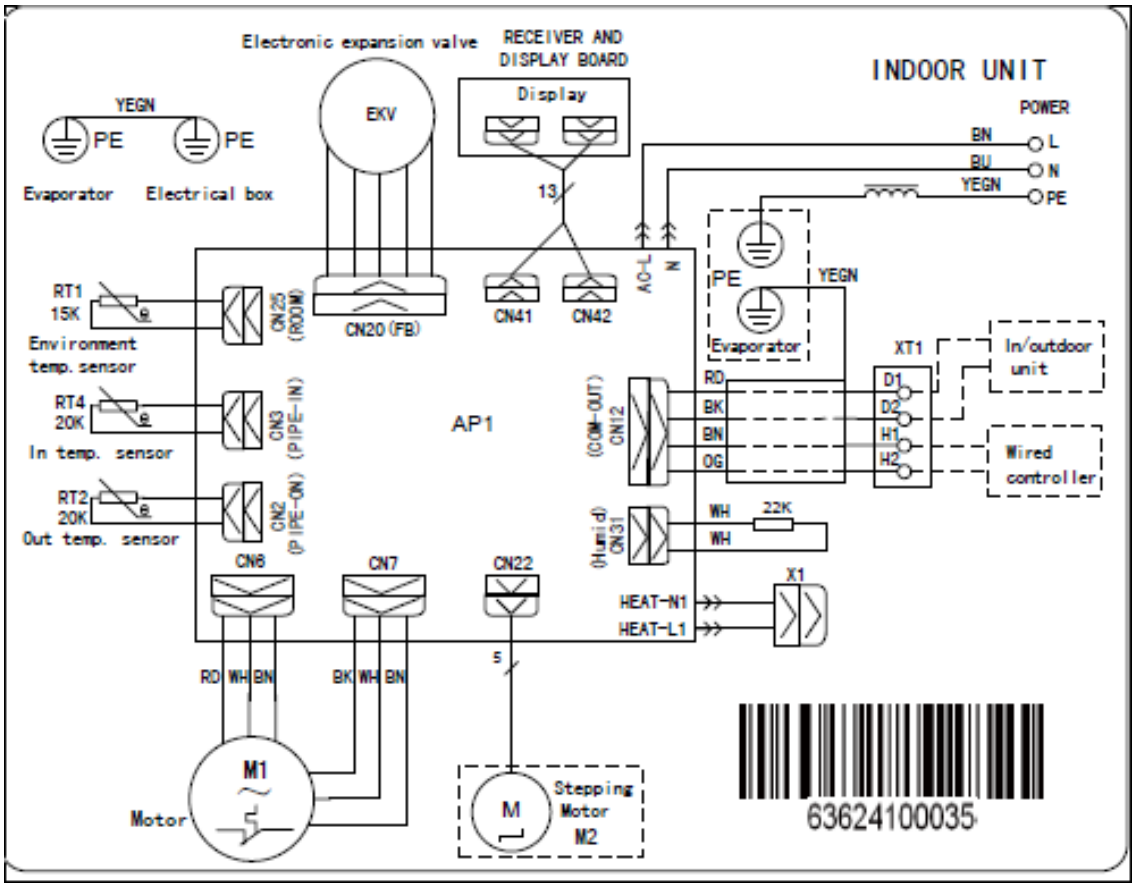

3.14 Super High Static Pressure Duct Type Indoor Unit

GMV-ND22PHS/B-T、GMV-ND25PHS/B-T、GMV-ND28PHS/B-T、GMV-ND32PHS/B-T、GMV-ND36PHS/B-T、GMV-ND40PHS/B-T、GMV-ND45PHS/B-T、GMV-ND50PHS/B-T、GMV-ND56PHS/B-T、GMV-ND63PHS/B-T、GMV-ND71PHS/B-T、GMV-ND80PHS/B-T：

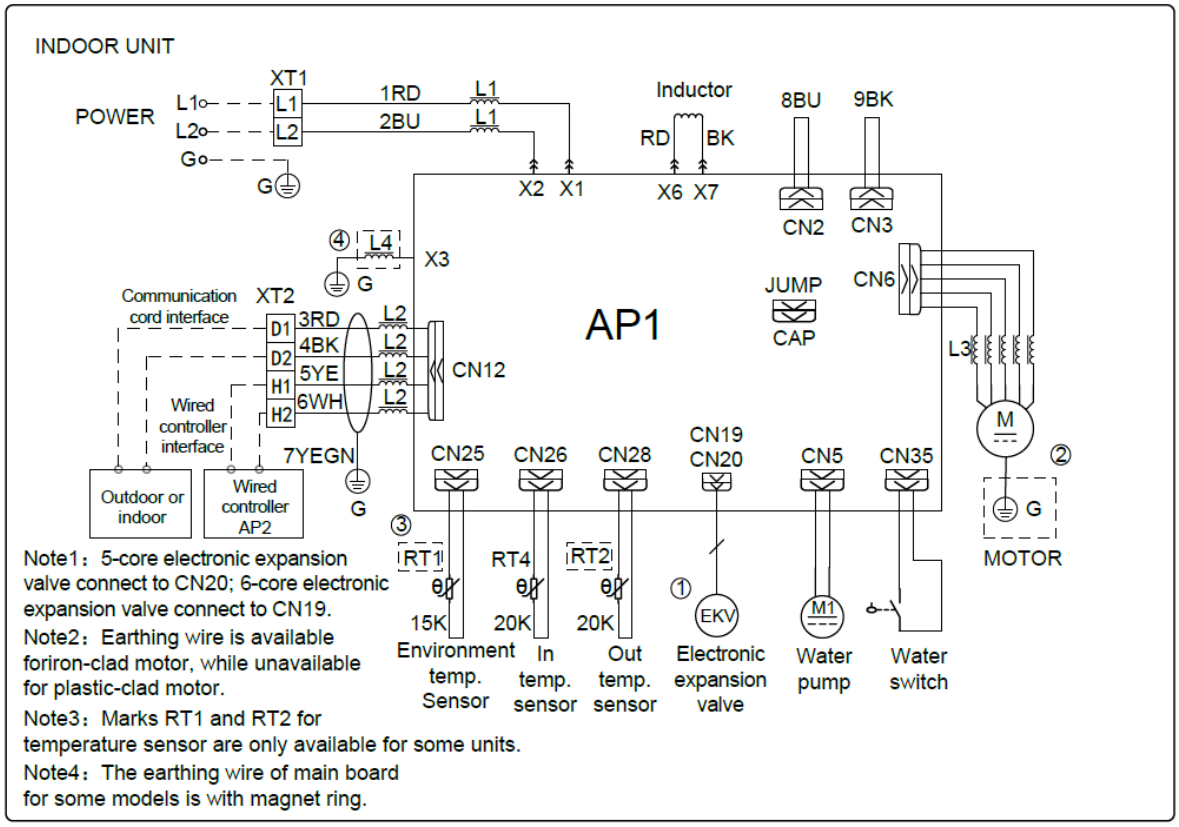

GMV-ND90PHS/B-T、GMV-ND100PHS/B-T、GMV-ND112PHS/B-T、GMV-ND125PHS/B-T：

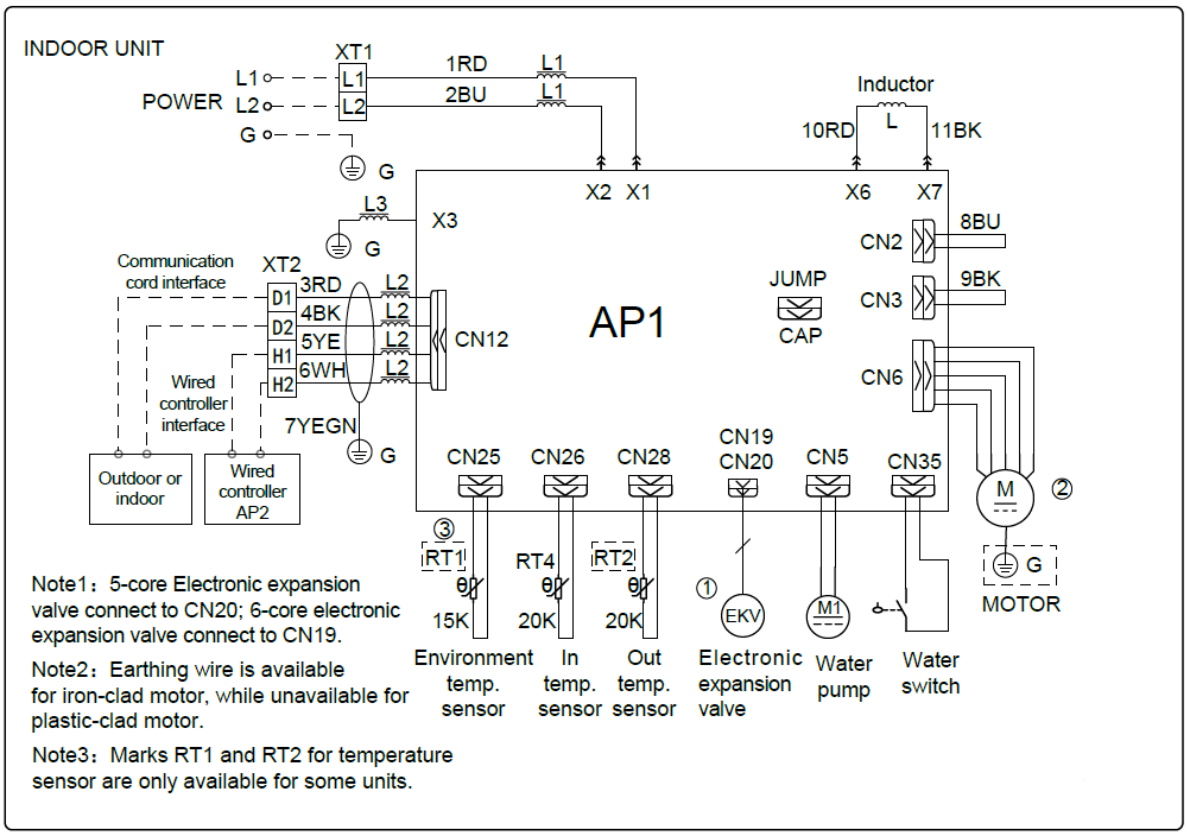

GMV-ND140PHS/B-T、GMV-ND160PHS/B-T：

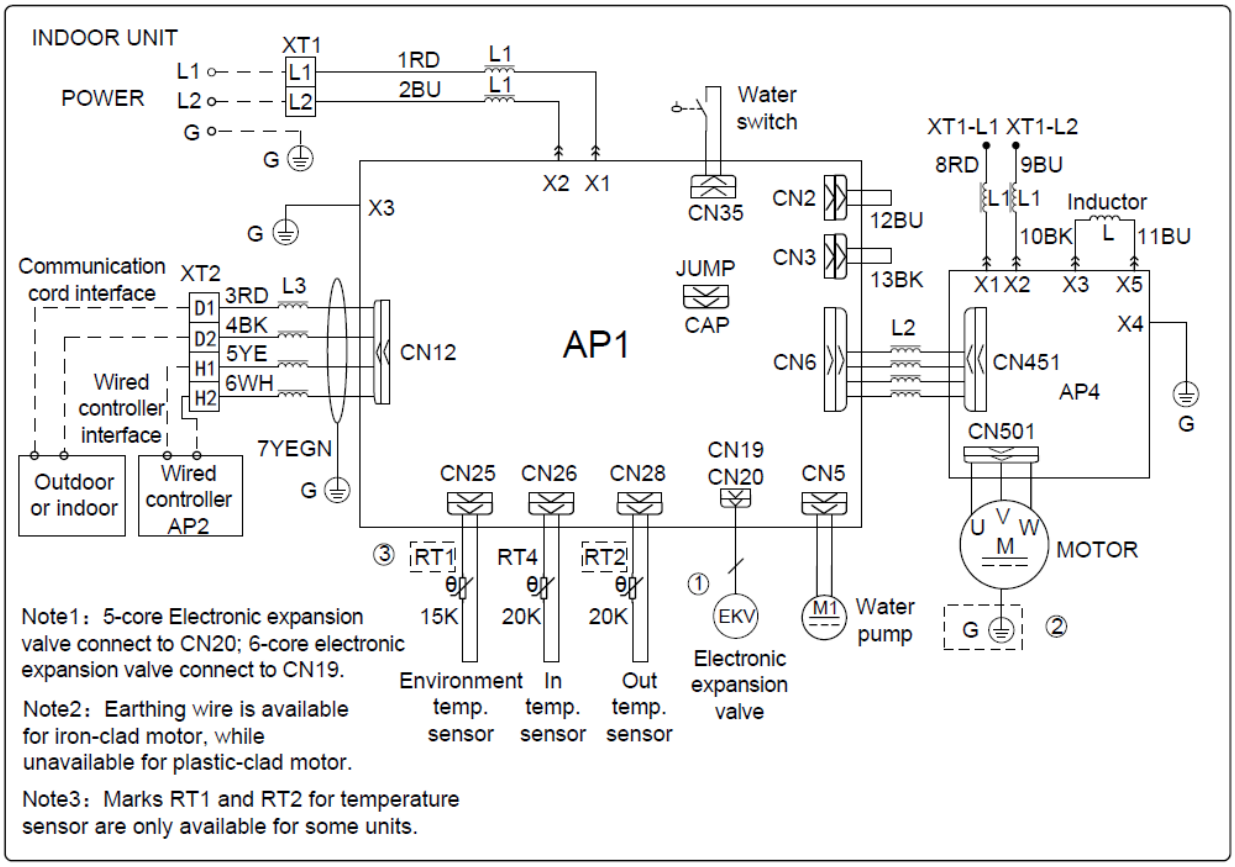

4 Disassembly And Assembly Procedure Of Main Parts

4.1 Floor Standing Type

Removal and Assembly of electric box		
Remarks: Before removing the electric box, make sure to cut off the power firstly.		
Step	Illustration	Handling Instruction
1. Loosen the buckles on both sides of the bottom panel.	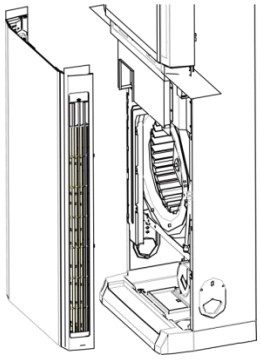	Cut off the power supply of indoor unit. Loosen the buckles on both sides of the bottom panel.
2. Unscrew the screws on the bottom panel and then pull it out outwards.	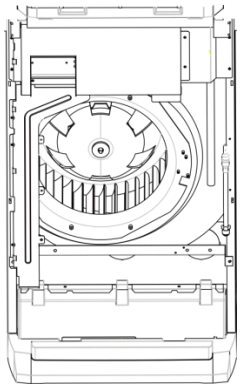	Unscrew the screws on the bottom panel and then pull it out outwards.
3. Unscrew the screws on the electric box and then open the cover of it.	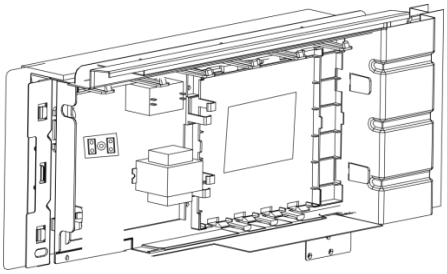	Unscrew the screws on the electric box and then open the cover of it.
4. Connect the power cord and the connection pipe.	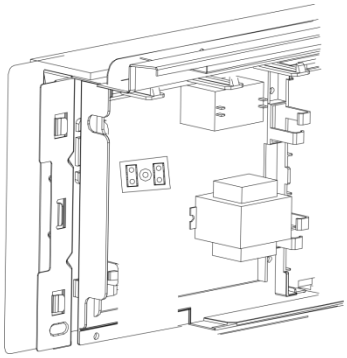	Connect the power cord and the connection pipe.

4.2 High Static Pressure Duct Type

Note: The following steps are specific for GMV-ND71PHS/A-T units. For other units, the assembly

and disassembly procedure is similar except the specifications of centrifugal fans and motors.

Motor and fan		
Precondition: The power supply has been disconnected.		
Step	Diagram	Operation Procedure
1. Remove the line connecting to the motor.	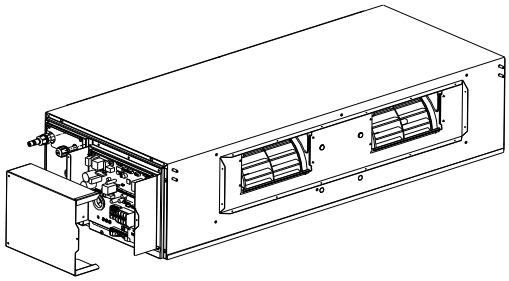	●Use a screwdriver to unscrew the electric box cover. ●Remove from the master board the line connecting to the motor and remove the tie.
2. Disassemble the seal plate and cover plate.	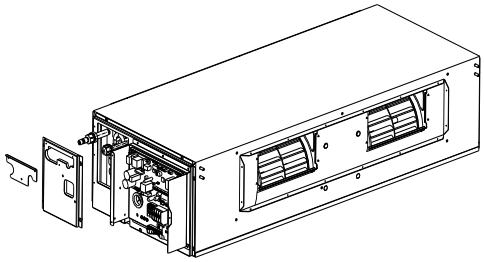	●Use a screwdriver to unscrew the seal plate and cover plate and then remove them.
3. Remove the cover plate component.	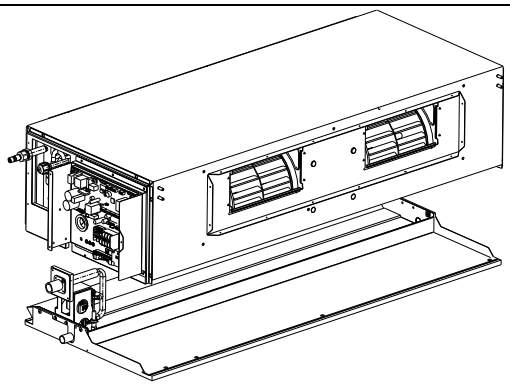	●Use a screwdriver to unscrew the cover plate component.
4. Disassemble the centrifugal fan.	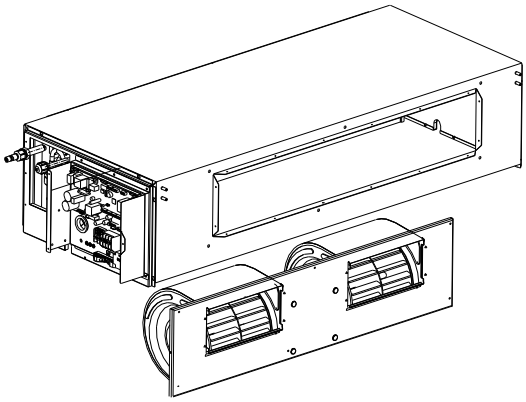	●Use a screwdriver to unscrew the centrifugal fan.
5. Remove the motor and centrifugal fan.	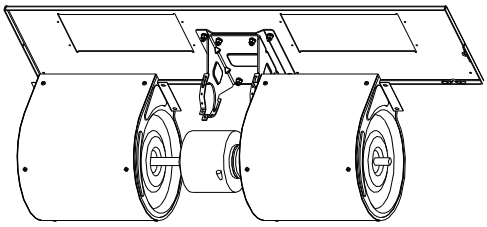	●Use a screwdriver to unscrew the centrifugal fan. ●Loosen the fasteners of the motor and remove the motor from the support. ●For motors that are accompanied with supports, the supports need removing as well.

6. Remove the centrifugal fan.	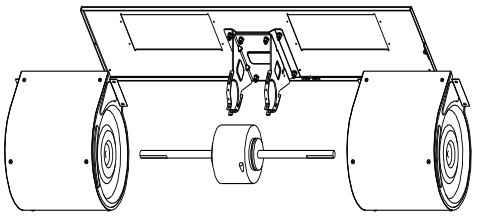	●Use a hexagon to unscrew the fan and remove the centrifugal fan from the motor axle.
8. Install a new motor.	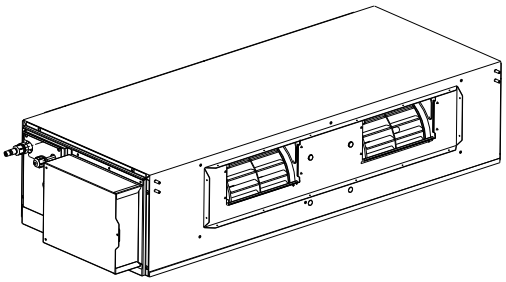	●Assemble units based on the reverse order of this procedure and power on the units for test.

4.3 Low Static Pressure Duct Type

Note: The following steps are specific for GMV-ND22PLS/A-T units. For other units, the assembly and disassembly procedure is similar except the numbers of centrifugal fans and motors.

Motor and fan		
Precondition: The power supply has been disconnected.		
Step	Diagram	Operation Procedure
1. Remove the line connecting to the motor.	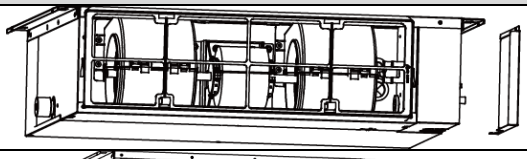	●Use a screwdriver to unscrew the electric box cover. ●Remove from the master board the line connecting to the motor and remove the tie.
2. Remove the filter.	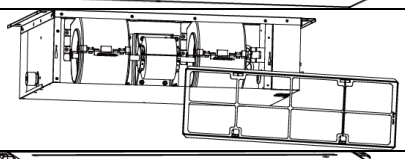	●Remove the filter from the air return frame.
3. Remove the air return cover plate.	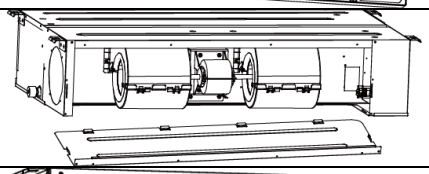	●Use a screwdriver to unscrew the air return cover plate.
4. Remove the rear volute casing.	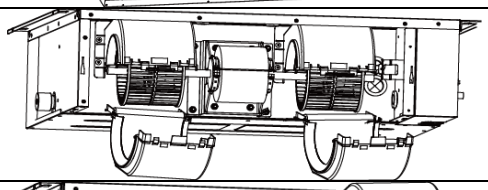	●Loosen the fasteners that connect the rear volute casing with the front volute casing and remove the rear volute casing.
5. Remove the front volute casing.	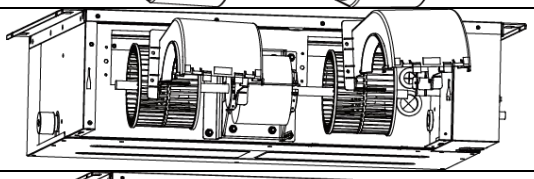	●Use a screwdriver to unscrew the front volute casing and then remove the volute casing.
6. Loosen the centrifugal fan and motor.	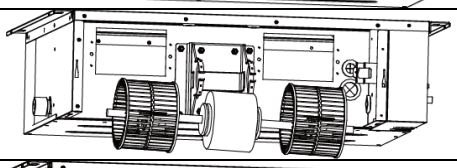	●Use a hexagon to unscrew the centrifugal fan and loosen the fasteners of the motor.
7. Remove the motor.	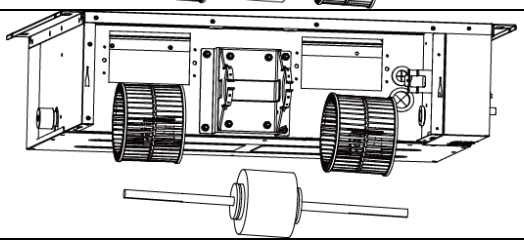	●Remove the motor from the support and remove the centrifugal fan from the motor axle. Then, remove the motor. ●For motors that are accompanied with supports, the supports need removing as well.

8. Install a new motor.	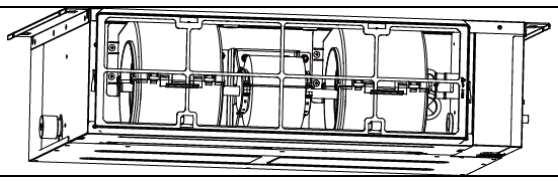	●Assemble units based on the reverse order of this procedure and power on the units for test.

4.4 4-way Cassette Type

Motor and fan		
Step	Diagram	Operation Procedure
1. Unscrew the water tray.	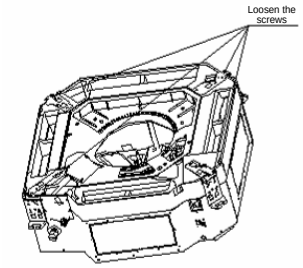	●Use a screwdriver to unscrew the water tray.
2. Remove the water tray.	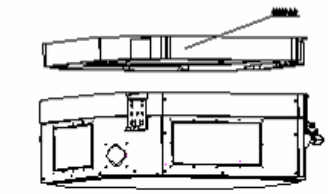	●Remove the water tray.
3. Unscrew the centrifugal fan.	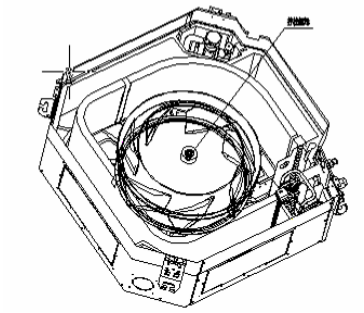	●Use a wrench to unscrew the centrifugal fan.
4. Remove the centrifugal fan.	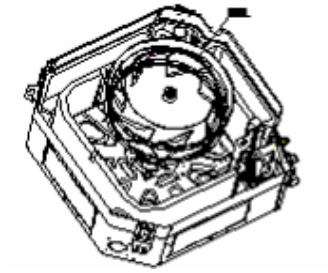	●Remove the centrifugal fan.
5. Unscrew the motor.	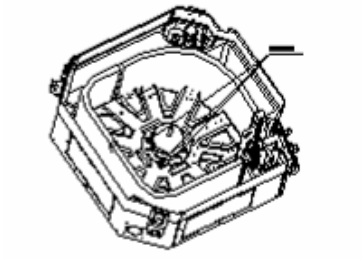	●Use a screwdriver to unscrew the motor.

Motor and fan		
Step	Diagram	Operation Procedure
6. Replace the motor with a new one.	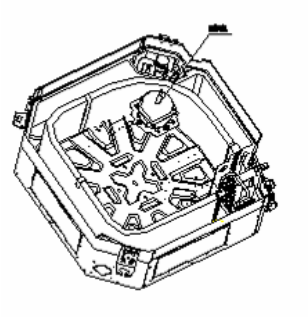	●Replace the motor with a new one.
7. Screw the motor.	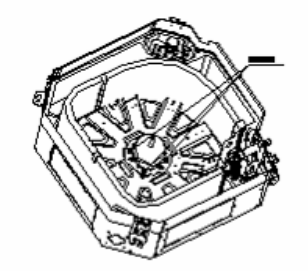	●Use a screwdriver to screw the motor.
8. Install and screw the centrifugal fan.	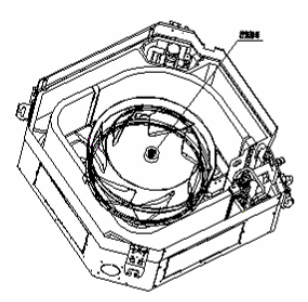	●Install the centrifugal fan and use a wrench to screw the centrifugal fan.
9. Install and screw the water tray.	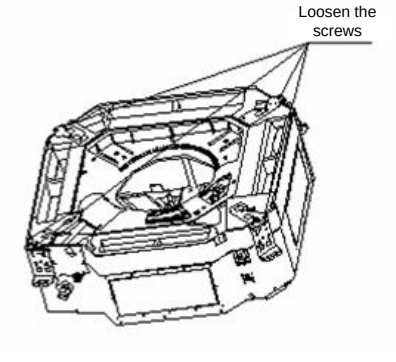	●Use a screwdriver to screw the water tray

Pump		
Step	Diagram	Operation Procedure
1. Unscrew the water tray.	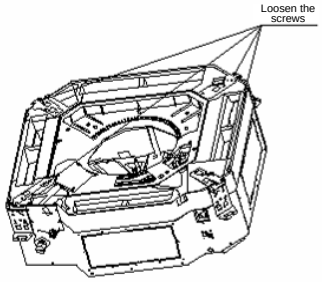	●Use a screwdriver to unscrew the water tray.
2. Remove the water tray.	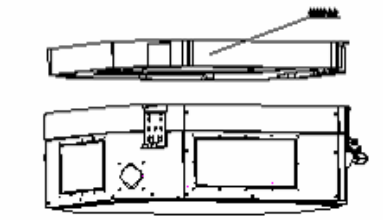	●Replace the water tray.
3. Remove the drainage duct and unscrew the pump.	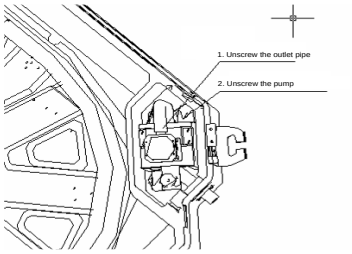	3. Remove the drainage duct and use a screwdriver to unscrew the pump.
4. Replace the pump.		●Replace the pump.
5. Connect the drainage duct and screw the new pump.	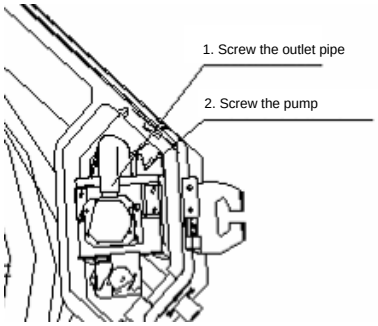	●Connect the drainage duct and use a screwdriver to screw the new pump.
6. Install and screw the water tray.	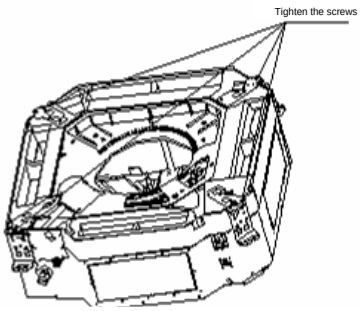	●Use a screwdriver to screw the water tray.

4.5 Compact 4-way Cassette Type

Motor and fan		
Step	Diagram	Operation Procedure
1. Unscrew the water tray.	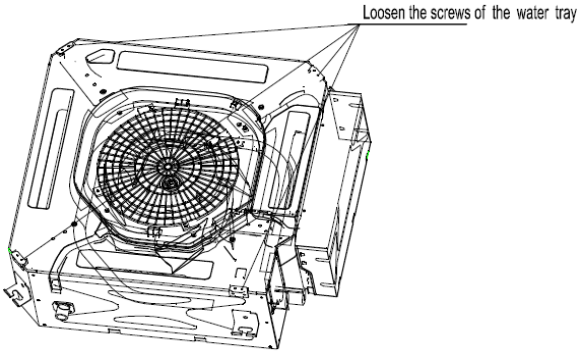	●Use a screwdriver to unscrew the water tray.
2. Remove the water tray.	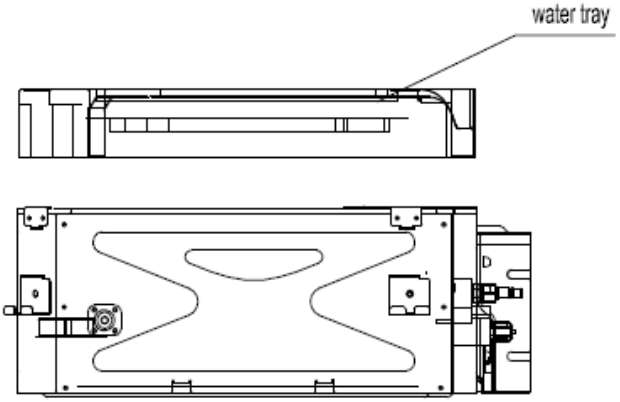	●Remove the water tray.
3. Unscrew the centrifugal fan.	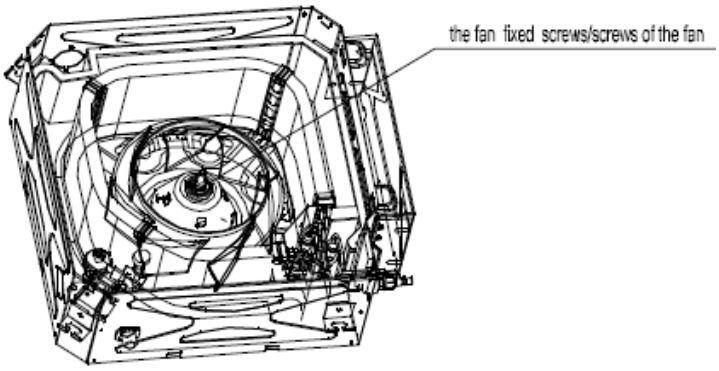	●Use a wrench to unscrew the centrifugal fan.
4. Remove the centrifugal fan.	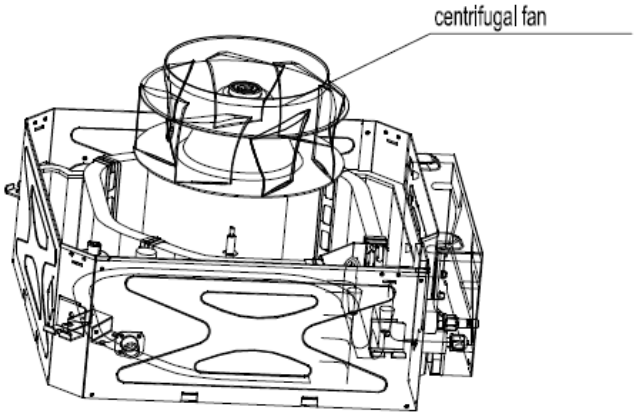	●Remove the centrifugal fan.

Motor and fan		
Step	Diagram	Operation Procedure
5. Unscrew the motor.	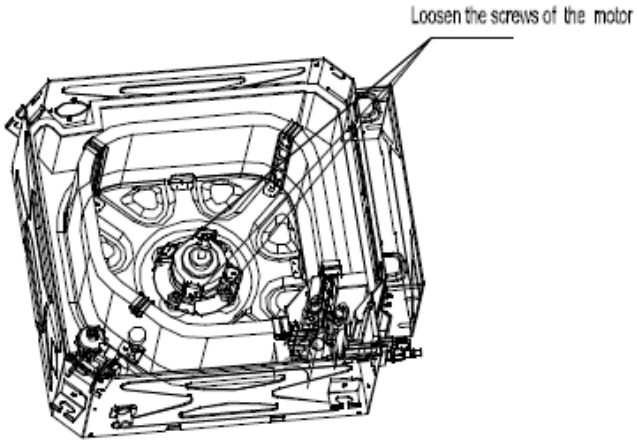	●Use a screwdriver to unscrew the motor.
6. Replace the motor with a new one.	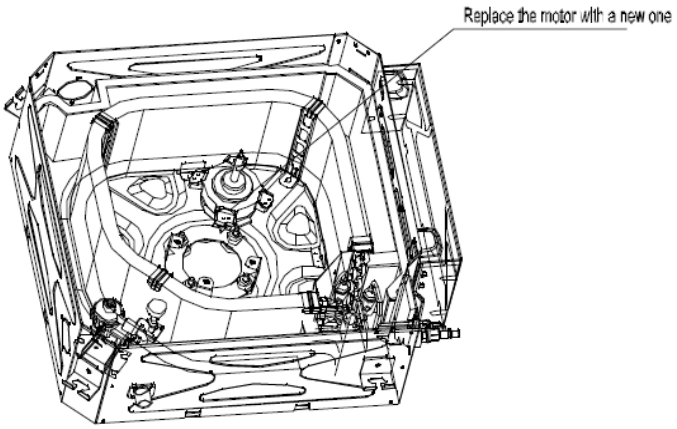	●Replace the motor with a new one.
7. Screw the motor.	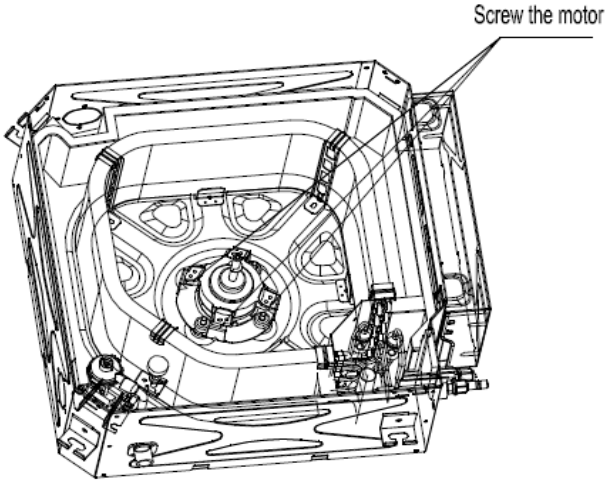	●Use a screwdriver to screw the motor.

Motor and fan		
Step	Diagram	Operation Procedure
8. Install and screw the centrifugal fan.	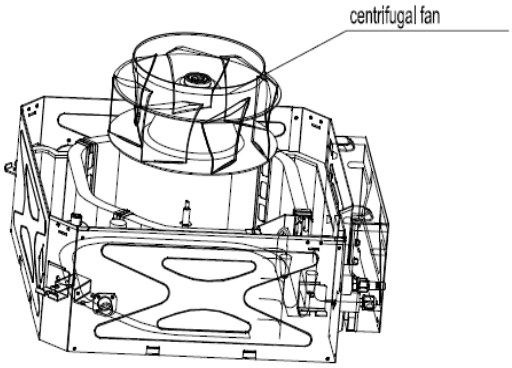	●Install the centrifugal fan and use a wrench to screw the centrifugal fan.
9. Install and screw the water tray.	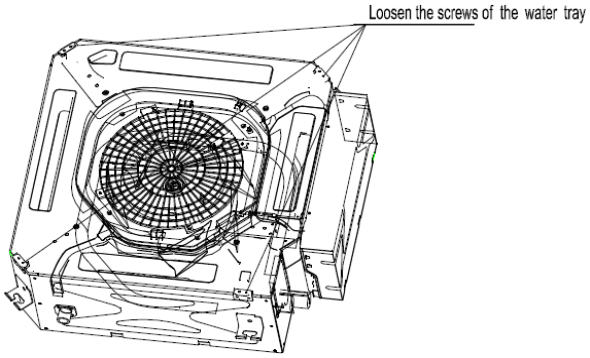	●Use a screwdriver to screw the water tray

Pump		
Step	Diagram	Operation Procedure
1. Unscrew the water tray.	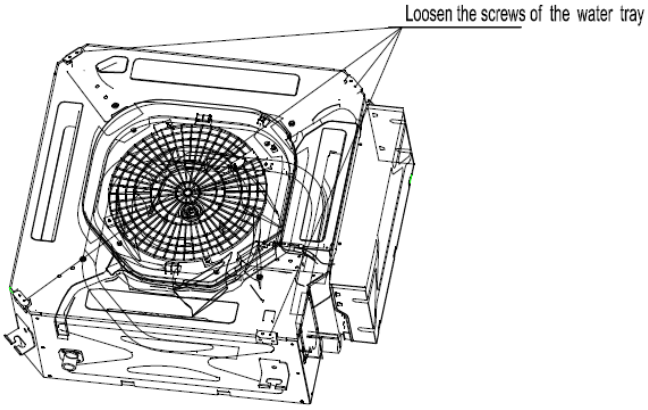	●Use a screwdriver to unscrew the water tray.

Pump		
Step	Diagram	Operation Procedure
2. Remove the water tray.	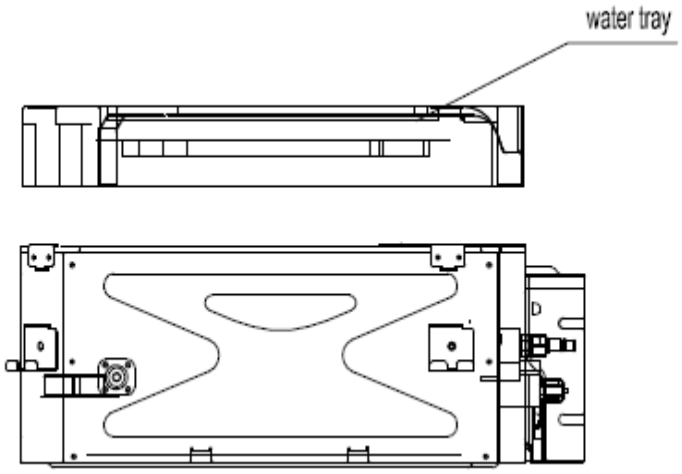	●Replace the water tray.
3. Remove the drainage duct and unscrew the pump.	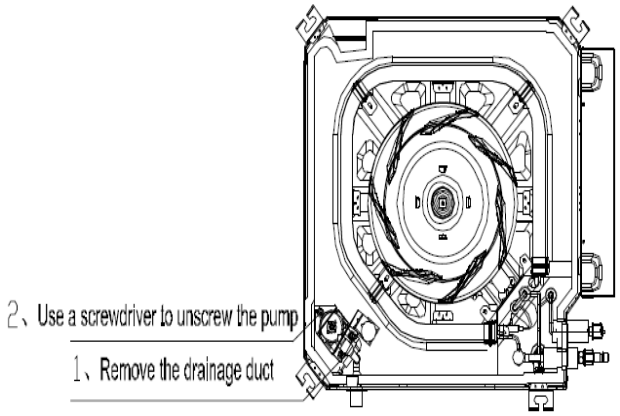	3. Remove the drainage duct and use a screwdriver to unscrew the pump.
4. Replace the pump.	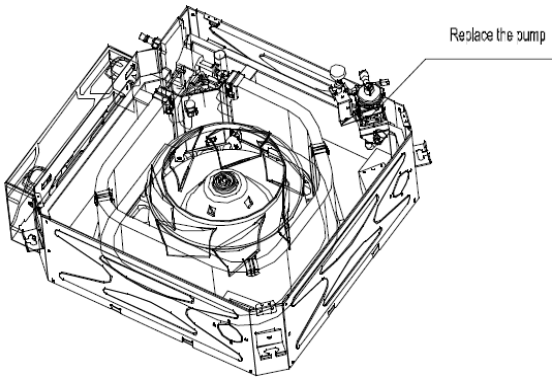	●Replace the pump.

Pump		
Step	Diagram	Operation Procedure
5. Connect the drainage duct and screw the new pump.	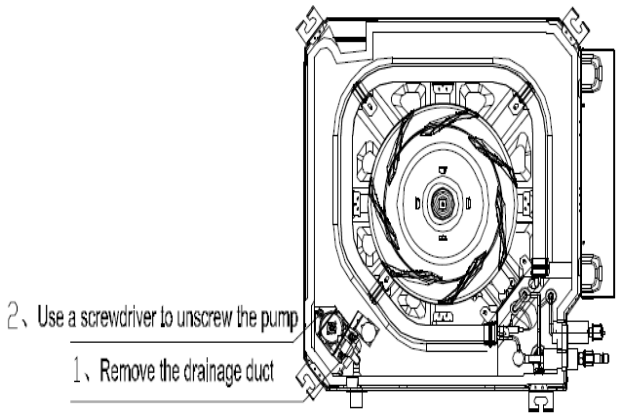	●Connect the drainage duct and use a screwdriver to screw the new pump.
6. Install and screw the water tray.	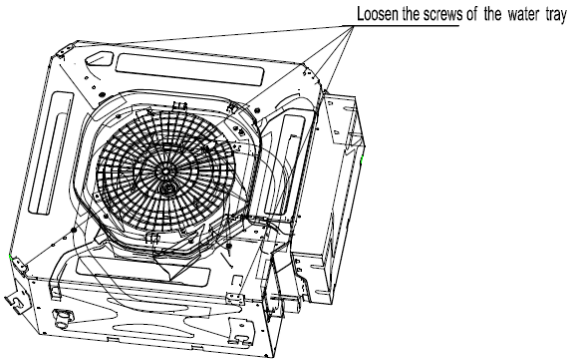	●Use a screwdriver to screw the water tray.

4.6 2-way Cassette Type

Note: The following steps are specific for GMV-ND50TS/A-T units. For other units, the assembly and disassembly procedure is similar except the numbers of centrifugal fans and motors.

Removal of Fan Motor		
Precondition: The power supply has been disconnected.		
Step	Diagram	Operation Procedure
1. Remove the grille	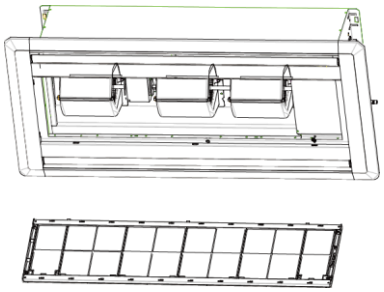	●Slip the fasteners on the panel, open the grille, remove it

Removal of Fan Motor		
Precondition: The power supply has been disconnected.		
Step	Diagram	Operation Procedure
2. Remove the line connecting to the motor.	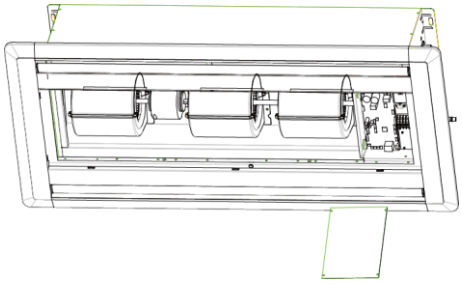	●Use a screwdriver to unscrew the electric box cover. ●Remove from the master board the line connecting to the motor and remove the tie.
3. Remove the motor、Remove the motor from the support	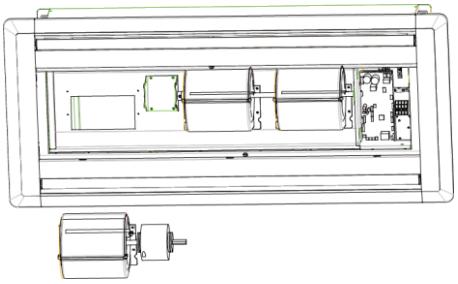	●Use a screwdriver to unscrew the motor、volute casing subassembly and joint slack。 ●Loosen the fasteners of the motor ,remove the motor from the support ●Remove the volute casing subassembly as well
4. Remove the centrifugal fan	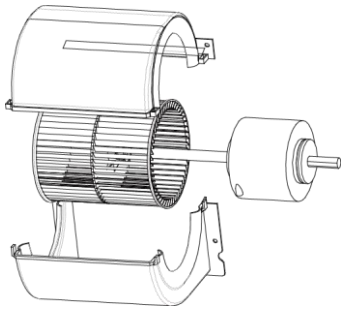	●Remove the volute casing ●Use a hexagon to unscrew the centrifugal fan，remove it from motor axle
5. Replace the motor with a new one.	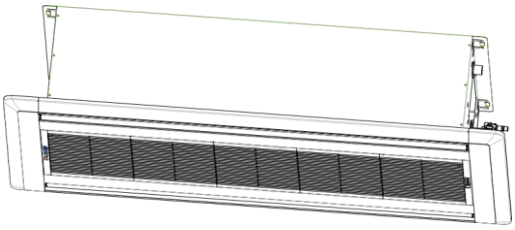	●Assemble units based on the reverse order of this procedure and power on the units for test.

4.7 1-way Cassette Type

Motor and fan		
Step	Diagram	Operation Procedure
1. Unscrew the water tray.	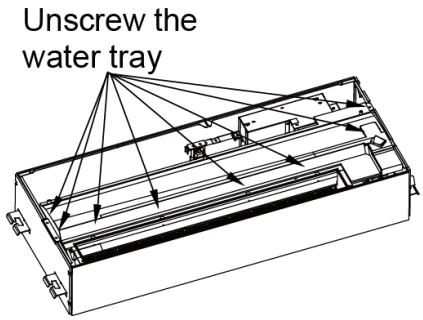	●Use a screwdriver to unscrew the water tray.
2. Remove the water tray.	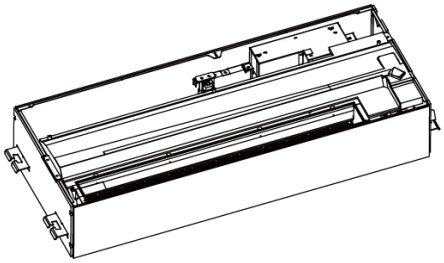	●Remove the water tray.
3. Unscrew the volute tongue.	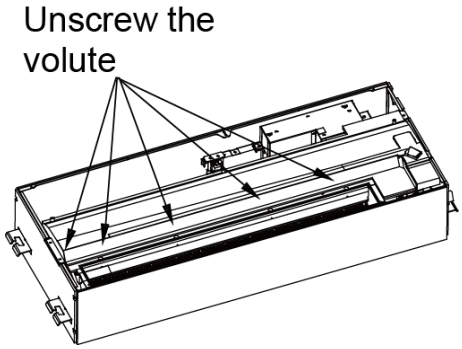	●Use a screwdriver to unscrew the volute tongue.
4. Remove the volute tongue.	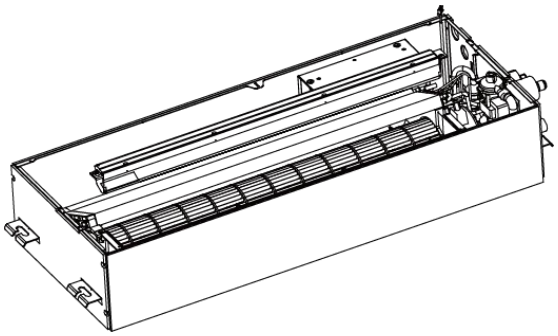	●Remove the volute tongue.
5. Unscrew the outlet board.	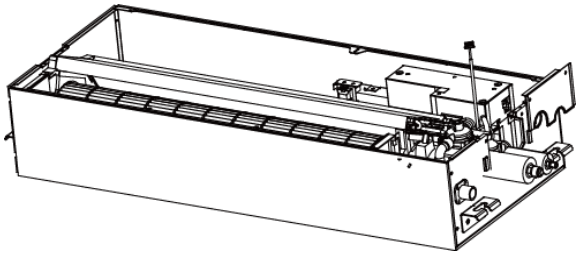	●Use a screwdriver to unscrew the outlet board and then remove the board.

Motor and fan		
Step	Diagram	Operation Procedure
6. Remove the evaporator.	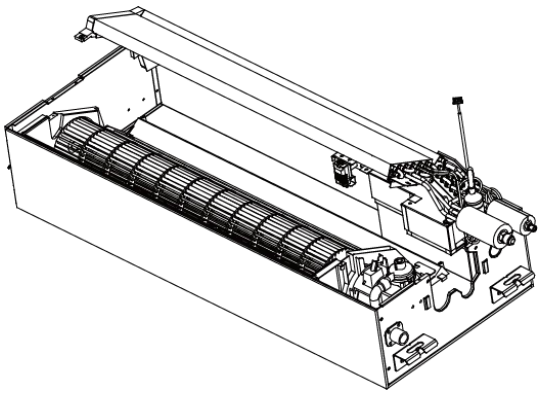	●Remove the evaporator.
7. Unscrew the motor pressing board.	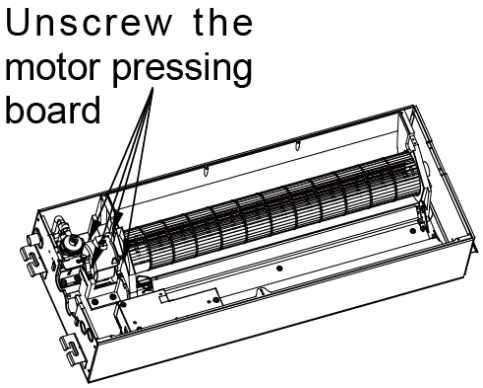	●Use a screwdriver to unscrew the motor pressing board.
8. Remove the pressing board and replace the motor.	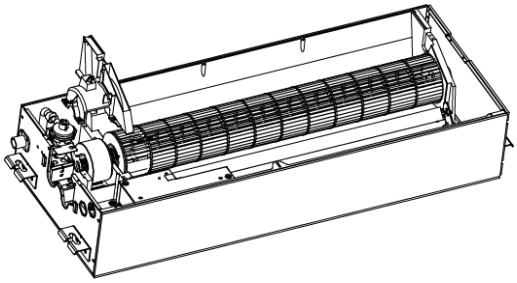	●Remove the pressing board and replace the motor.
9. Screw the motor pressing board.	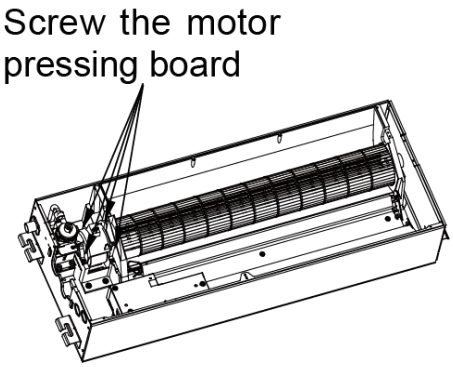	●Use a screwdriver to screw the motor pressing board.
10. Install the evaporator.	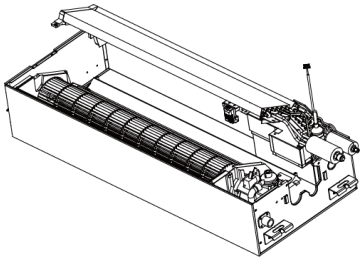	●Install the evaporator.

Motor and fan		
Step	Diagram	Operation Procedure
11. Screw the outlet board.	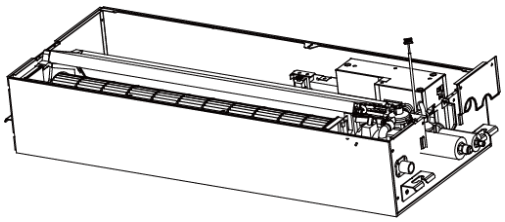	●Use a screwdriver to screw the outlet board.
12. Put the volute tongue back to position.	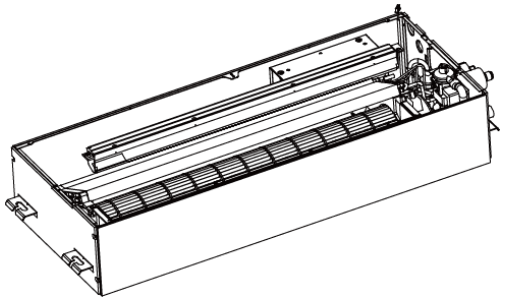	●Put the volute tongue back to position.
13. Screw the volute tongue.	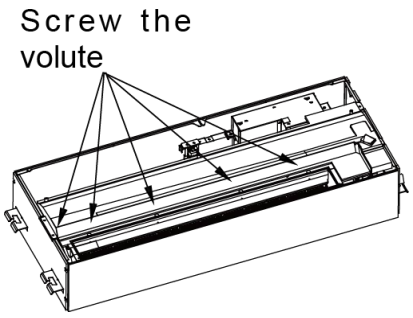	●Use a screwdriver to screw the volute tongue.
14. Install the water tray.	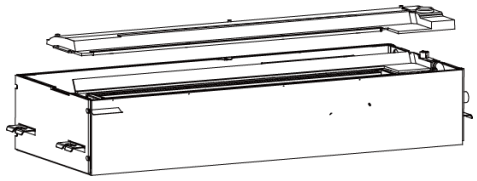	●Install the water tray.
15. Screw the water tray.	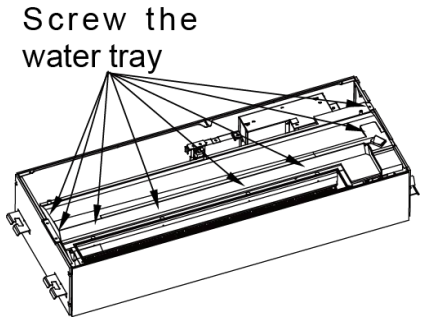	●Use a screwdriver to screw the water tray.

4.8 Floor Ceiling Type

Note: The following steps are specific for GMV-ND140ZD/A-T units. For other units, the assembly and disassembly procedure is similar except the numbers of centrifugal fans and motors.

Motor and fan		
Precondition: The power supply has been disconnected.		
Step	Diagram	Operation Procedure
1. Remove the air return grille.	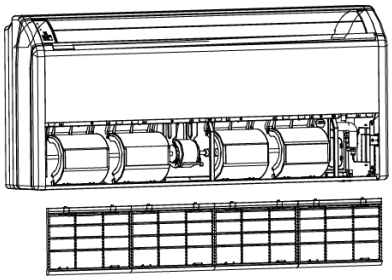	●Loosen the fasteners of the air return grille and then remove the grille.
2. Remove the left and right cover plates.	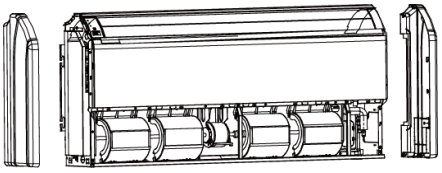	●Use a screwdriver to unscrew the left and right cover plates and then remove the cover plates.
3. Remove the electric box cover and the line connecting to the motor.	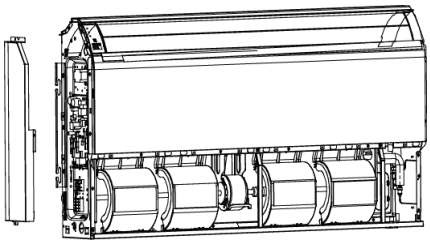	●Use a screwdriver to unscrew the electric box cover. ●Remove from the master board the line connecting to the motor and remove the tie.
4. Remove the limit board.	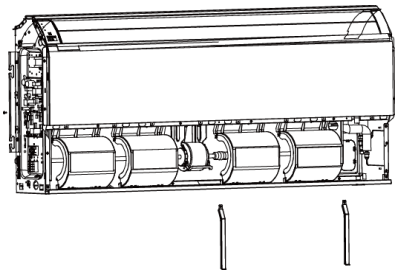	●Use a screwdriver to unscrew the limit board and then remove the board.
5. Remove the rear connecting board.	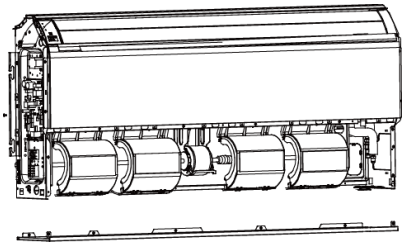	●Use a screwdriver to unscrew the rear connecting board and them remove the board.
6. Remove the rear volute casing.	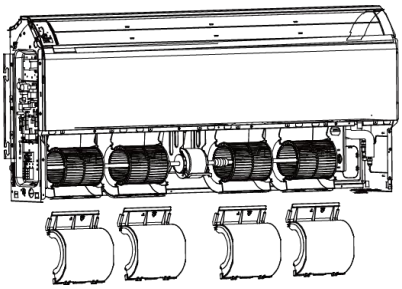	●Loosen the fasteners that connect the rear volute casing with the front volute casing and remove the rear volute casing.

Motor and fan		
Precondition: The power supply has been disconnected.		
Step	Diagram	Operation Procedure
7. Remove the front volute casing.	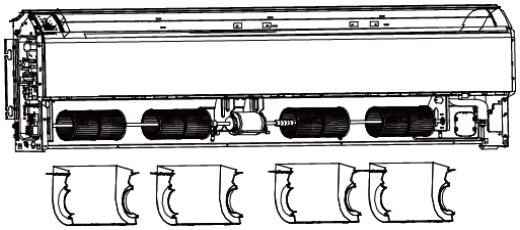	●Use a screwdriver to unscrew the front volute casing and then remove the volute casing.
8. Remove the centrifugal fan.	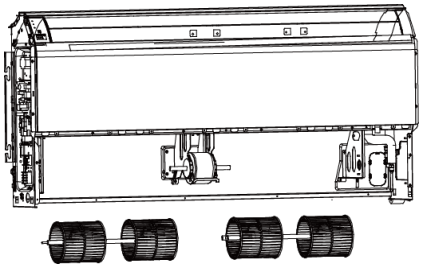	●Loosen the fasteners that connect the coupler with the motor axle and remove the centrifugal fan.
9. Remove the motor.	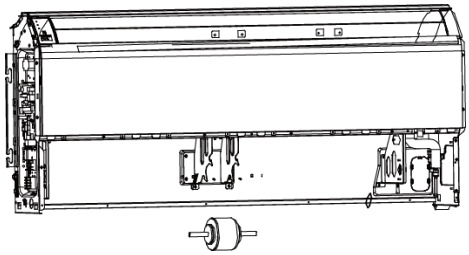	●Remove the motor from the support and remove the centrifugal fan from the motor axle. Then, remove the motor. ●For motors that are accompanied with supports, the supports need removing as well.
10. Install a new motor.	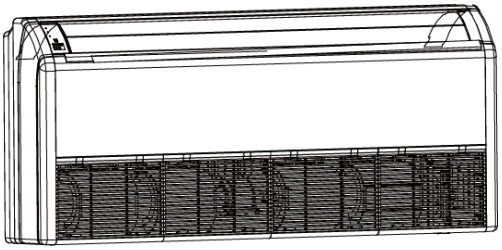	●Assemble units based on the reverse order of this procedure and power on the units for test.

4.9 Fresh air Processing Unit

GMV-NX140P/A (X1.2)-K

Motor and fan		
Precondition: The power supply has been disconnected.		
Step	Diagram	Operation Procedure
1. Remove the line connecting to the motor.	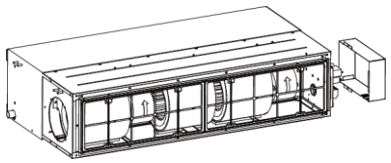	●Use a screwdriver to unscrew the electric box cover. ●Remove from the master board the line connecting to the motor and remove the tie.
2. Remove the filter. And the air return cover plate.	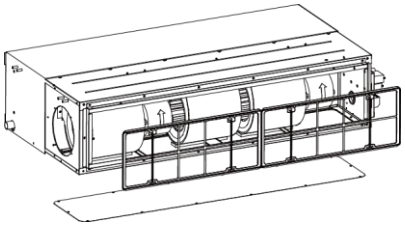	●Remove the filter from the air return frame. ●Use a screwdriver to unscrew the air return cover plate.
3. Remove the rear propeller housing and Remove the front propeller housing.	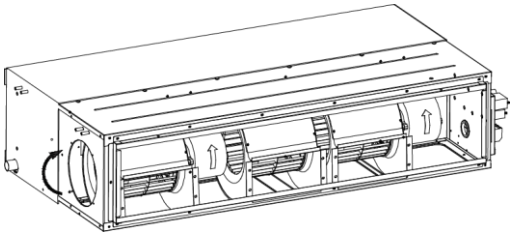	●Loosen the fasteners that connect the rear propeller housing with the front propeller housing and remove the rear propeller housing. ●Use a screwdriver to unscrew the front propeller housing and then remove the propeller housing.
4. Remove the motor.	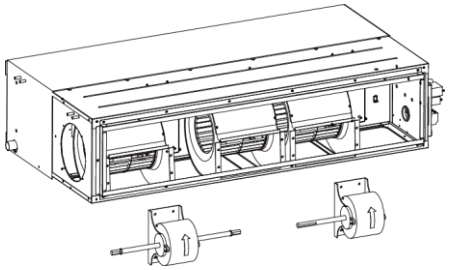	●Remove the motor from the support and remove the louver from the motor axle. Then, remove the motor.
5. Install a new motor.	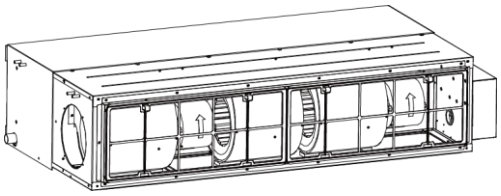	●Assemble units based on the reverse order of this procedure and power on the units for test.

GMV-NX224P/A(X2.0)-M、GMV-NX280P/A(X2.5)-M、GMV-NX280P/A(X3.0)-M

Motor and fan		
Precondition: The power supply has been disconnected.		
Step	Diagram	Operation Procedure
1.Remove the line connecting to the motor.	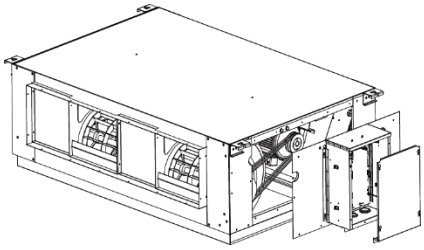	●Use a screwdriver to unscrew the electric box cover. ●Remove from the master board the line connecting to the motor and remove the tie.
2. Remove the cover plate assembly	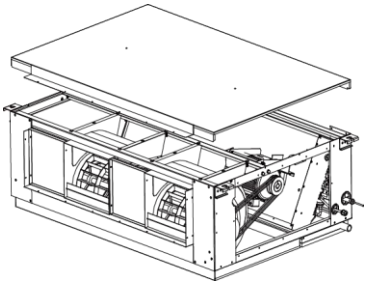	●Use a screwdriver to unscrew the bolt to fixure the cover plate
3. loosen the strap, Remove the motor cover plate	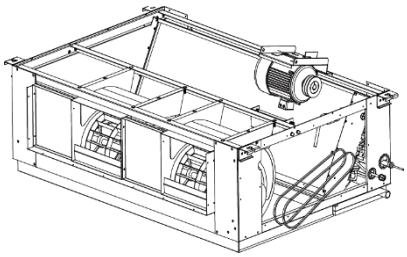	●loosen the strap, Use a screwdriver to unscrew the bolt to fixure the cover plate
4. Remove the motor.	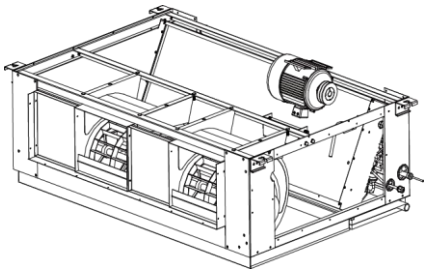	●Remove the motor from the support and remove the louver from the motor axle. Then, remove the motor.
5.Install a new motor.	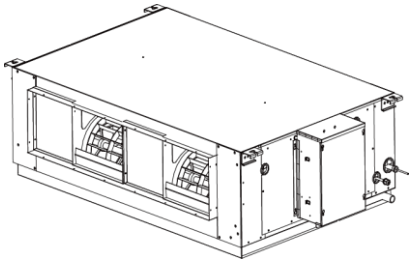	●Assemble units based on the reverse order of this procedure and power on the units for test.

GMV-NX450P/A(X4.0)-M

Motor and fan		
Precondition: The power supply has been disconnected.		
Step	Diagram	Operation Procedure
1.Remove the line connecting to the motor.	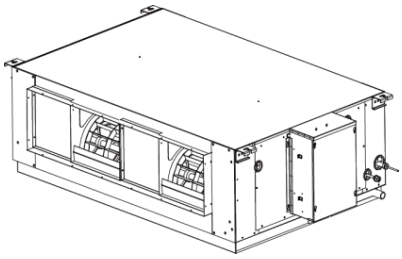	●Use a screwdriver to unscrew the electric box cover. ●Remove from the master board the line connecting to the motor and remove the tie.
2.Remove the cover plate assembly	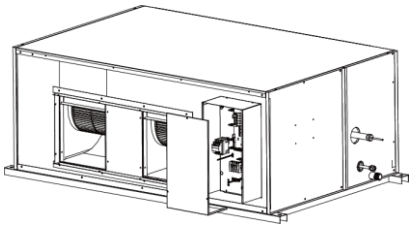	●Use a screwdriver to unscrew the bolt to fixure the cover plate
3. Remove the motor.	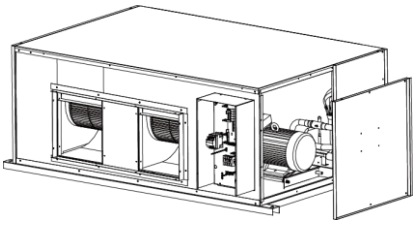	●Remove the motor from the support and remove the centrifugal fan from the motor axle. Then, remove the motor. ●For motors that are accompanied with supports, the supports need removing as well
4.Install a new motor.	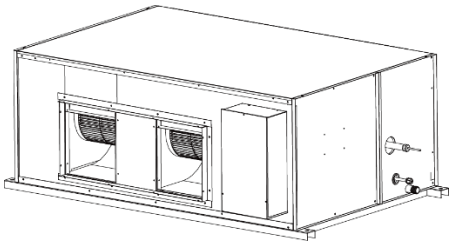	●Assemble units based on the reverse order of this procedure and power on the units for test.

GMV-NDX224P/A-T、GMV-NDX280P/A-T

Motor and fan		
Precondition: The power supply has been disconnected.		
Step	Diagram	Operation Procedure
1. Remove the cover plate component.	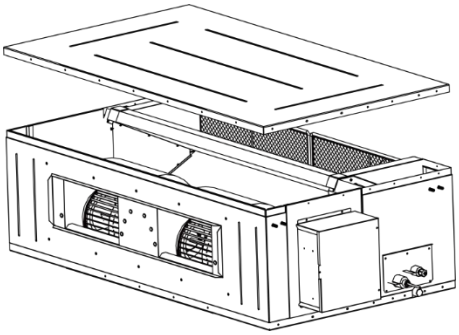	●Use a screwdriver to unscrew the cover plate component.
2. Remove the line connecting to the motor.	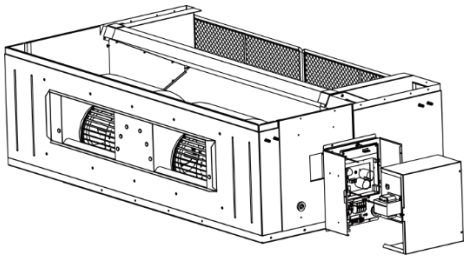	●Use a screwdriver to unscrew the electric box cover. ●Remove from the master board the line connecting to the motor and remove the tie.
3. Disassemble the centrifugal fan.	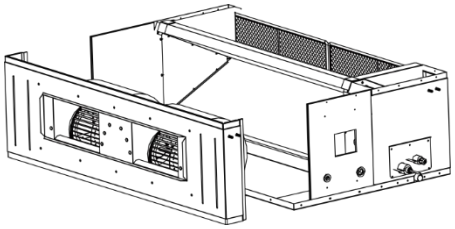	●Use a screwdriver to unscrew the centrifugal fan.
4. Remove the centrifugal fan.	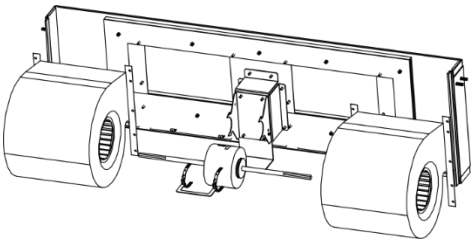	●Use a hexagon to unscrew the centrifugal fan and remove the centrifugal louver from the motor axle.
5. Install a new motor.	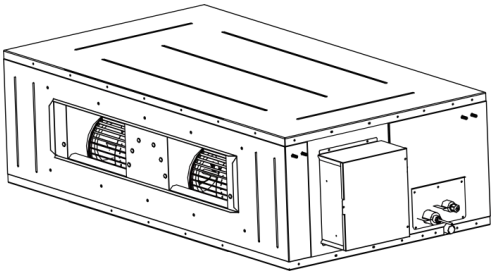	●Assemble units based on the reverse order of this procedure and power on the units for test.

4.10 Slim Duct Type

Note: The following steps are specific for GMV-ND22PL/B-T units. For other units, the assembly and disassembly procedure is similar except the numbers of louvers and motors.

Motor and fan		
Precondition: The power supply has been disconnected.		
Step	Diagram	Operation Procedure
1. Remove the cover plate of the electric box.	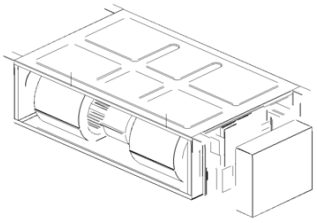	●Disconnect the power supply of the IDUs, use a screwdriver to unscrew the cover plate of the electric box, and then remove the line connecting to the motor.
2. Remove the rear volute casing.	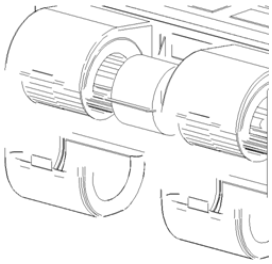	●Loosen the fasteners that connect the rear volute casing with the front volute casing and remove the rear volute casing.
3. Remove the front volute casing.	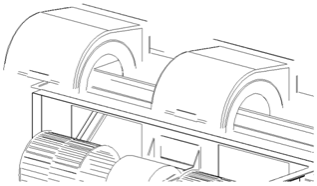	●Use a screwdriver to unscrew the front volute casing and then remove the volute casing.
4. Remove the louver and motor.	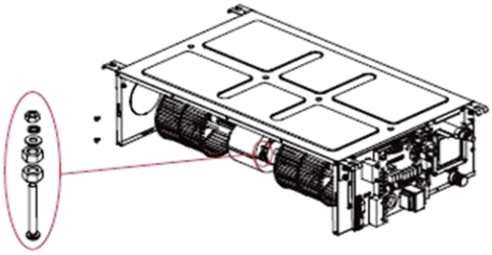	●Use a screwdriver to unscrew the louver and loosen the fasteners of the motor.
5. Install a new motor.	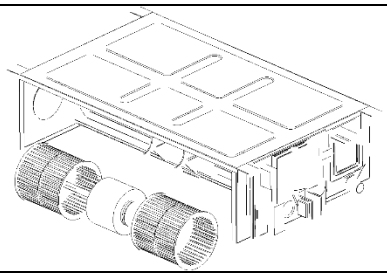	●Remove the motor from the support and remove the louver from the motor. Then, remove the motor. ●Install a new motor.
6. Install units in a reverse order of this procedure.	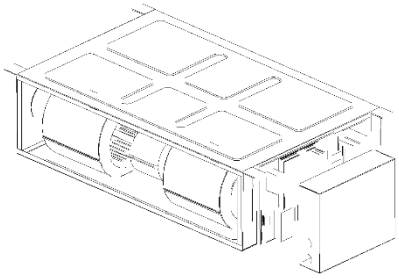	●Assemble units based on the reverse order of this procedure and power on the units for test.

4.11 Console Type Indoor Unit

Note: The following steps are specific for GMV-ND22C/A-T units. For other units, the assembly and disassembly procedure is similar except the numbers of louvers and motors.

Removal of Fan Motor		
Remark: before removing, making sure power is disconnected.		
Step	Diagram	Operation Procedure
1. Open the panel	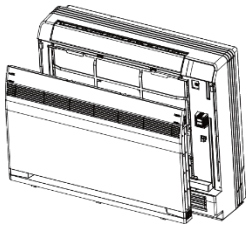	●Press clasps at both sides to “OPEN” position.
2. Remove filter and front case	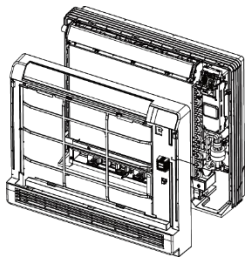	●Remove 5 screws fixing the front case.
3. Remove electric box	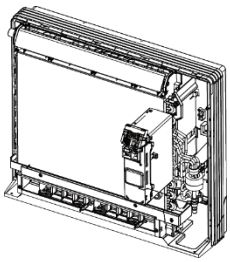	●Open electric box cover, loosen all connection wires and then remove screws.
4. Remove water tray and swing motor	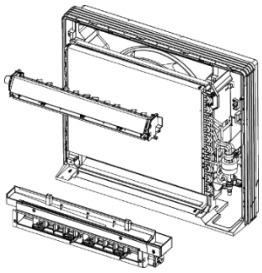	●Remove 2 screws fixing water tray and swing motor respectively.
5. Remove evaporator	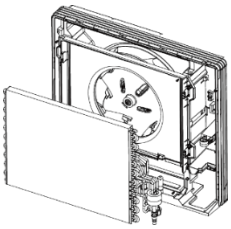	●Remove the fixer fixing the evaporator, press 2 clasps at left side and then remove the evaporator.
6. Remove reversion loop and centrifugal blade	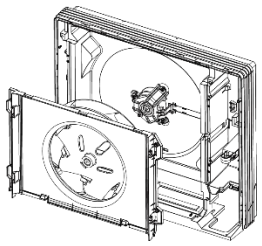	●Remove 4 screws fixing the reversion loop and then remove the reversion loop’ remove nuts on blade and then remove the centrifugal blade.

4.12 Wall Mounted type Indoor Unit

Note: The following steps are specific for GMV-N22G/A3A-K units. For other units, the assembly and disassembly procedure is similar except the numbers of louvers and motors.

Removal of Fan Motor		
Remark: before removing, making sure power is disconnected.		
Step	Diagram	Operation Procedure
1. Remove the louver	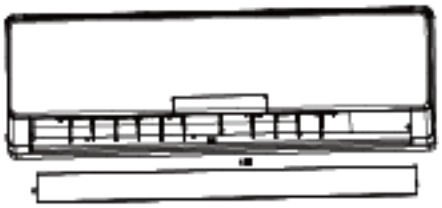	●Take off the axle bush of the louver. ●Remove the louver.
2. Open the front panel	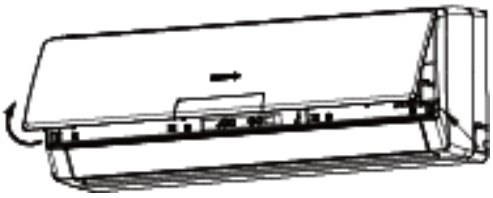	●Hold the indents on both sides of the panel and pull it out in the direction shown by the arrow.
3. Remove the electrical box cover 2	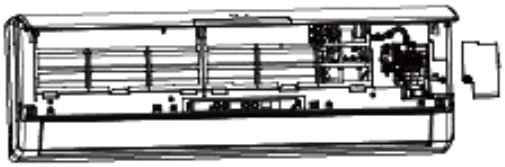	●Unscrew the screws fixing the electrical box cover with a screwdriver. Take off the box cover 2. ●Detach the ambient temperature sensor from the conduit.
4. Remove the front panel assembly	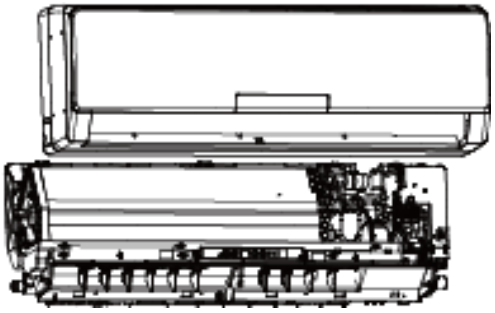	●Unscrew the screws fixing the front panel assembly. ●Remove the front panel assembly.
5. Remove the electrical box cover 1		●Press on the buckle of the box cover 1 and then take off the cover.
6. Remove the main board	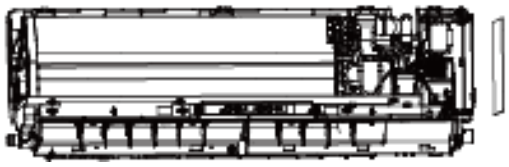	●Release the wiring terminals connected to the main board. ●Remove the main board.

Removal of Fan Motor		
Remark: before removing, making sure power is disconnected.		
Step	Diagram	Operation Procedure
7. Remove the electrical box	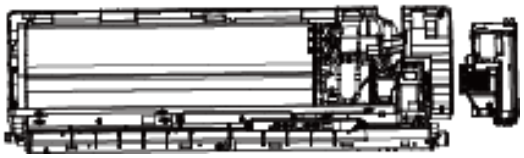	●Unscrew the screws fixing the electrical box with a screwdriver. ●Remove the electrical box.
8. Remove the evaporator	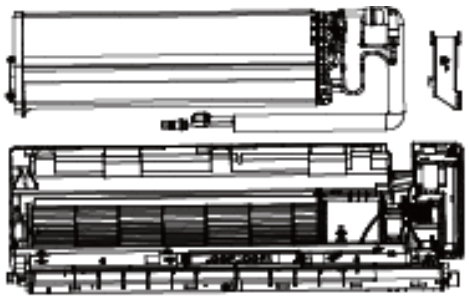	●Use a screwdriver to unscrew the screws fixing the press plate of connection pipe on the back of the unit and take off the press plate. ●Unscrew the screws of evaporator with a screwdriver and then remove the evaporator.
9.Remove motor's pressing plate	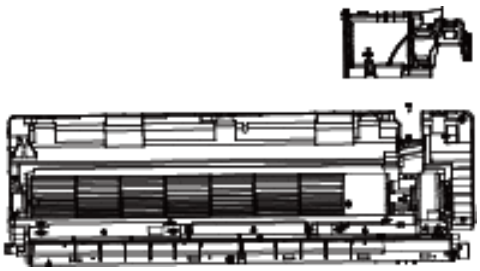	●Unscrew the fixing screws of the pressing plate with a screwdriver and then remove it.
10. Remove the motor and fan		●Take off the motor and fan directly. ●Use a screwdriver to unscrew the screws connecting the motor and the fan.
11. Install a new motor.	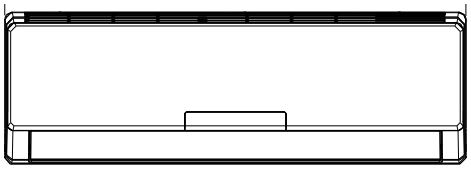	●Assemble units based on the reverse order of this procedure and power on the units for test.

4.13 Super High Static Pressure Duct Type Indoor Unit

Note: The following steps are specific for GMV-ND22PHS/B-T units. For other units, the assembly and disassembly procedure is similar except the specifications of centrifugal fans and motors.

Motor and fan		
Precondition: The power supply has been disconnected.		
Step	Diagram	Operation Procedure
1.Remove the line connecting to the motor.	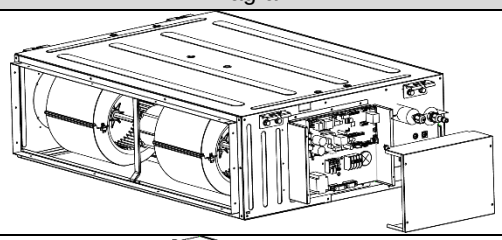	●Use a screwdriver to unscrew the electric box cover. ●Remove from the master board the line connecting to the motor and remove the tie.
2. isassemble the seal plate and cover plate.	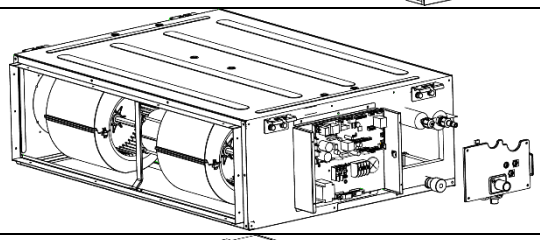	●Use a screwdriver to unscrew the seal plate and cover plate and then remove them.
3.Remove the grille	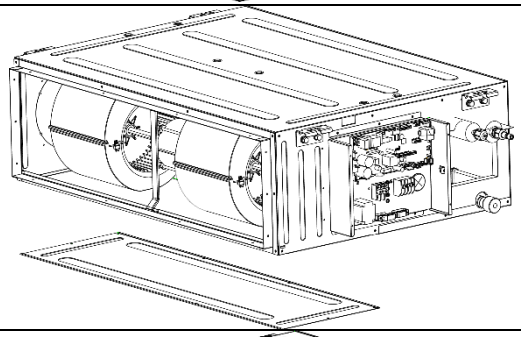	●Use a screwdriver to unscrew the cover plate component.
4. Remove the centrifugal fan.	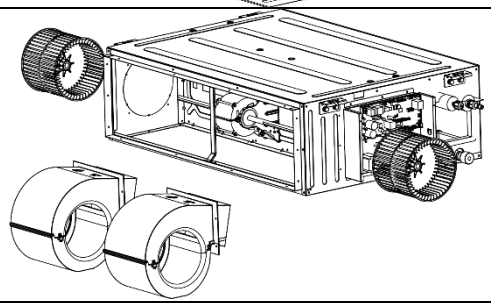	●Use a screwdriver to unscrew the front volute casing and then remove the volute casing.
5. Remove the motor.	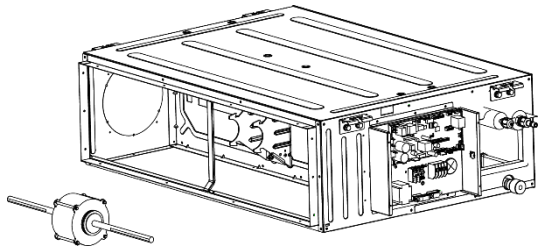	Remove the motor from the support and remove the centrifugal fan from the motor axle. Then, remove the motor. ●For motors that are accompanied with supports, the supports need removing as well.
6. Install a new motor.	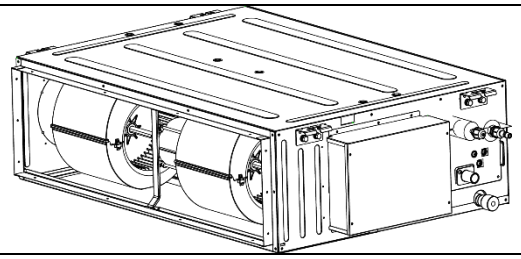	●Assemble units based on the reverse order of this procedure and power on the units for test.

5 Exploded Views And Part List

5.1 Floor Standing Type

Exploded View of GMV-ND100L/A-T, GMV-ND140L/A-T

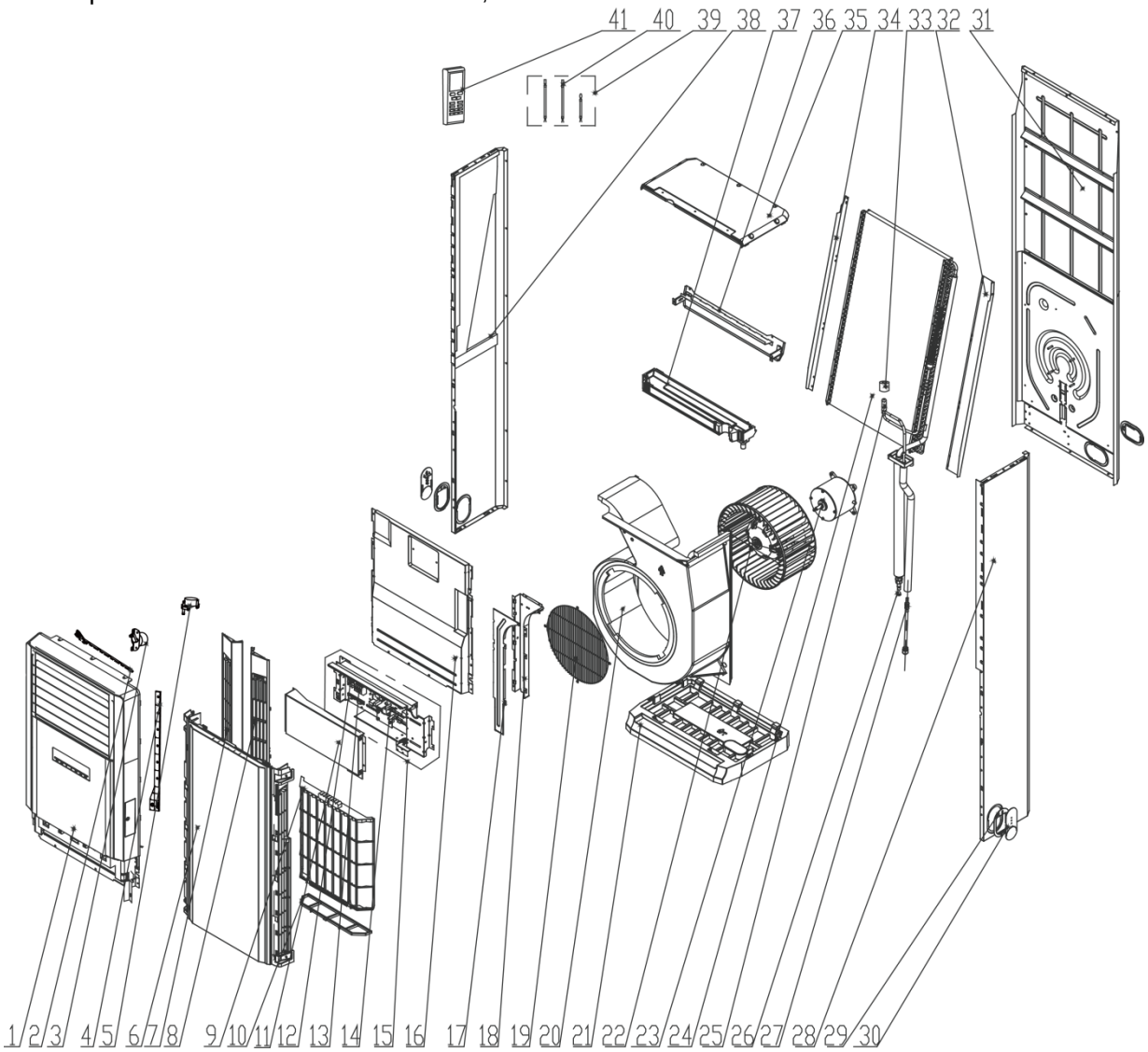

NO	Model	GMV-ND100L/A-T	GMV-ND140L/A-T	Qty
	Product Code	CM300N0060	CM300N0070	
	Part Name	Part Code	Part Code	
1	Air Outlet Panel Assy	20004505	20004505	1
2	Swing Lever	10584218	10584218	1
3	Stepping Motor	15214005	15214005	1
4	Guide blade Lever	10584089	10584089	1
5	Stepping Motor	1521400803	1521400803	1
6	Air Intake Panel Assy	20004536	20004536	1
7	Left Side board	0130451901	0130430401	1
8	Right Side Plate of Air Inlet	0130451801	0130430301	1
9	Filter Sub-Assy(Upper)	11124100	11124100	1
10	Filter(Lower)	11124012	11124012	2
11	Electric Box Cover Sub-Assy	01404388	01404388	1
12	Terminal Board	42010259	42010259	1
13	Terminal Board	4201800002601	4201800002601	1
14	Main Board	30226000004	30226000004	1
15	Electric Box Assy	02404122	02404122	1

NO	Model	GMV-ND100L/A-T	GMV-ND140L/A-T	Qty
	Product Code	CM300N0060	CM300N0070	
	Part Name	Part Code	Part Code	
16	Air Guard Assy	01354100012	01354100012	1
17	Cover of Pass Wire slot	01744109	01744109	1
18	Pass Wire slot	02164010	02164010	
19	Protective Covering	01474027	01474027	1
20	Propeller Housing	12104057	12104057	1
21	Chassis	22224020	22224020	1
22	Centrifugal Fan	10314401	10314401	1
23	Fan Motor	1501442502	1501442502	1
24	Evaporator Sub-Assy	01034024	01034054	1
25	Electronic Expansion Valve	07334468	07334468	1
26	Filter Sub-Assy	07210028	07210028	2
27	Strainer	07213050	07213050	
28	Right Side Plate Sub-Assy	0130451801	0130451801	1
29	Rear Cover	2224422101	2224422101	3
30	Baffle Plate	2611408801	2611408801	3
31	Rear Plate Sub-Assy	01304500	01304500	1
32	Right Air Guard	01364507	01364507	1
33	Electronic Expansion Valve Fitting	4304413219	4304413219	1
34	Left Air Guard	01364506	01364506	
35	Top Cover Sub-Assy	01364506	01364506	1
36	Breakwater Sub-Assy	01364154P	01364154P	1
37	Water Tray Sub-Assy	12314811	12314811	1
38	Left Side Plate Sub-Assy	0130451901	0130451901	
39	Sensor Sub-Assy	39008000115G	39008000115G	1
40	Temp Sensor	34030048	34030048	1
41	Remote Controller	30510589	30510589	1

Above data is subject to change without notice,pls reference the SP in global service website.

5.2 High Static Pressure Duct Type

Exploded View of GMV-ND56PHS/A-T、GMV-ND63PHS/A-T、GMV-ND71PHS/A-T、GMV-ND80PHS/A-T：

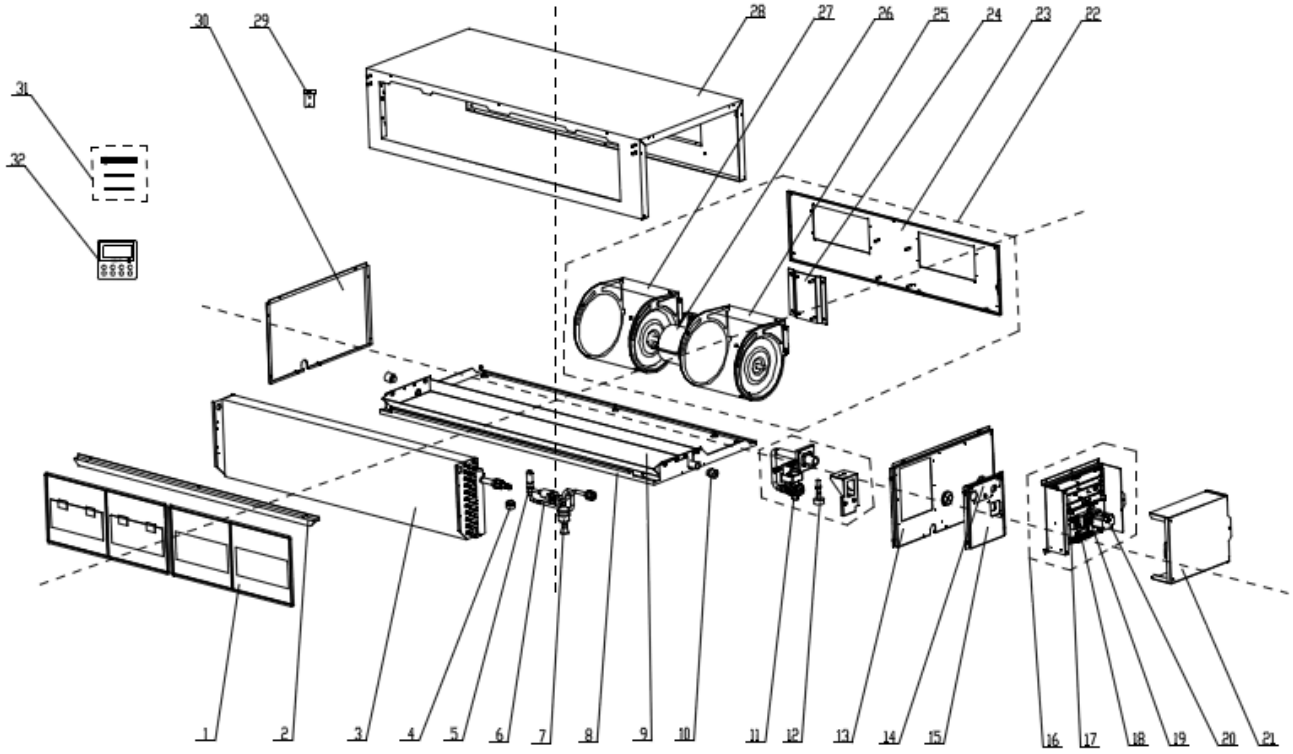

No.	Name of part	For the following unit	
		Unit	Product Code
		GMV-ND56PHS/A-T	CM800N3690
		GMV-ND63PHS/A-T	CM800N3700
		GMV-ND71PHS/A-T	CM800N3540
		GMV-ND80PHS/A-T	CM800N3710
		Part code	Quantity
1	Filter Sub-Assy	'11125303	2
2	Guide groove of the filter screen	'02285301	1
3	Evaporator Assy	'01024100090	1
4	Electric Expand Valve Fitting	'4304413215	1
5	Electronic Expansion Valve	'07334466	1
6	Strainer	'0741410000601	1
7	Filter	'07415210	1
8	Lower Cover Plate Sub-Assy	'01265304	1
9	Water Tray Assy	'01285317	1
10	Choke Plug of Drain Pipe	'76712455	2
11	Water Pump	'4313822001	1
12	Water Level Switch	'450127011	1
13	Right Side Plate	'01314100063	1
14	Seal plate'	'01494100008	1
15	Cover Plate	'01264100036	1
16	Electric Box Assy	'01394100255	1
17	Main Board	'30226000027	1
18	Terminal Board	'42011154	1
19	Terminal Board	'4201800002601	1
20	Inductance	'43128000014	1
21	Electric Box Cover	'01424100078	1
22	Centrifugal fan assy	'15405200029	1
23	Blower Mounting Plate Sub-Assy	'01325200039	1
24	Supporter	'01804100140	1
25	Blower	'15012454	1
26	Brushless DC Motor	'15705200006	1
27	Blower	'15012458	1
28	Top Cover Board Assy	'01265226	1
29	Hook	'02112446	4
30	Left Side Plate Assy	'01314155	1
31	Sensor Sub-assy	'39004169G	1
32	Display Board	'30296000040	1

Above data is subject to change without notice,pls reference the SP in global service website.

Exploded View of GMV-ND90PHS/A-T、GMV-ND100PHS/A-T、GMV-ND112PHS/A-T、GMV-ND125PHS/A-T、GMV-ND140PHS/A-T：

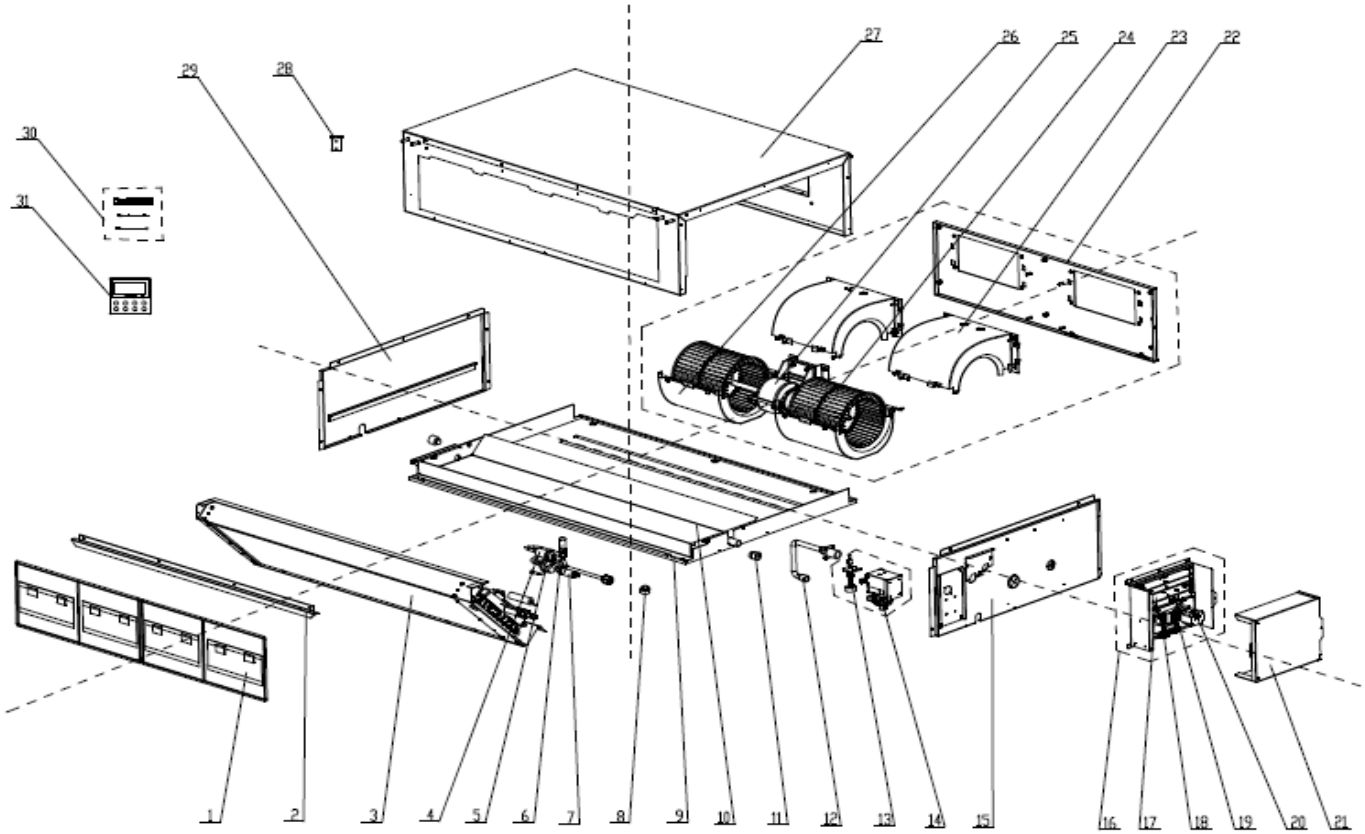

No.	Name of part	For the following unit	
		Unit	Product Code
		GMV-ND90PHS/A-T	CM800N3550
		GMV-ND100PHS/A-T	CM800N3650
		GMV-ND112PHS/A-T	CM800N3660
		GMV-ND125PHS/A-T	CM800N3670
		GMV-ND140PHS/A-T	CM800N3680
		Part code	Quantity
1	Filter Sub-Assy	'111253031	2
2	Side Plate of Air intake	'01375301	1
3	Evaporator Assy	'01024100077	1
4	Strainer	'0741410000601	2
5	Filter	0	0
6	Electronic Expansion Valve	'07334468	1
7	Strainer	'07220005	1
8	Electric Expand Valve Fitting	'4304413215	1
9	Lower Cover Plate Sub-Assy	'15265301	1
10	Water Tray Assy	'01285323	1
11	Choke Plug of Drain Pipe	'76712455	2
12	Pump Drainpipe	'05235301	1
13	Water Level Switch	'45018012	1
14	Water Pump	'43138220	1

No.	Name of part	For the following unit	
		Unit	Product Code
		GMV-ND90PHS/A-T	CM800N3550
		GMV-ND100PHS/A-T	CM800N3650
		GMV-ND112PHS/A-T	CM800N3660
		GMV-ND125PHS/A-T	CM800N3670
		GMV-ND140PHS/A-T	CM800N3680
		Part code	Quantity
15	Right Side Plate Sub-Assy	'01315200100	1
16	Electric Box Assy	'01394100255	1
17	Main Board	'30226000027	1
18	Terminal Board	'42011154	1
19	Terminal Board	'4201800002601	1
20	Inductance	'43128000014	1
21	Electric Box Cover	'01424100078	1
22	Blower Mounting Plate Sub-Assy	'01325200044	1
23	Volute casing(Upper)	'26904100051	2
24	Centrifugal Fan	'10424100001	2
25	Brushless DC Motor	'15709400006	1
26	Volute casing(Lower)	'26904100052	2
27	Top Cover Board Assy	'01264100039	1
28	Hook	'02112466	4
29	Left Side Plate Assy	'01315306	1
30	Sensor Sub-assy	'39004169G	1
31	Dsplay Board	'30296000040	1

Above data is subject to change without notice,pls reference the SP in global service website.

Exploded View of GMV-ND160PHS/A-T：

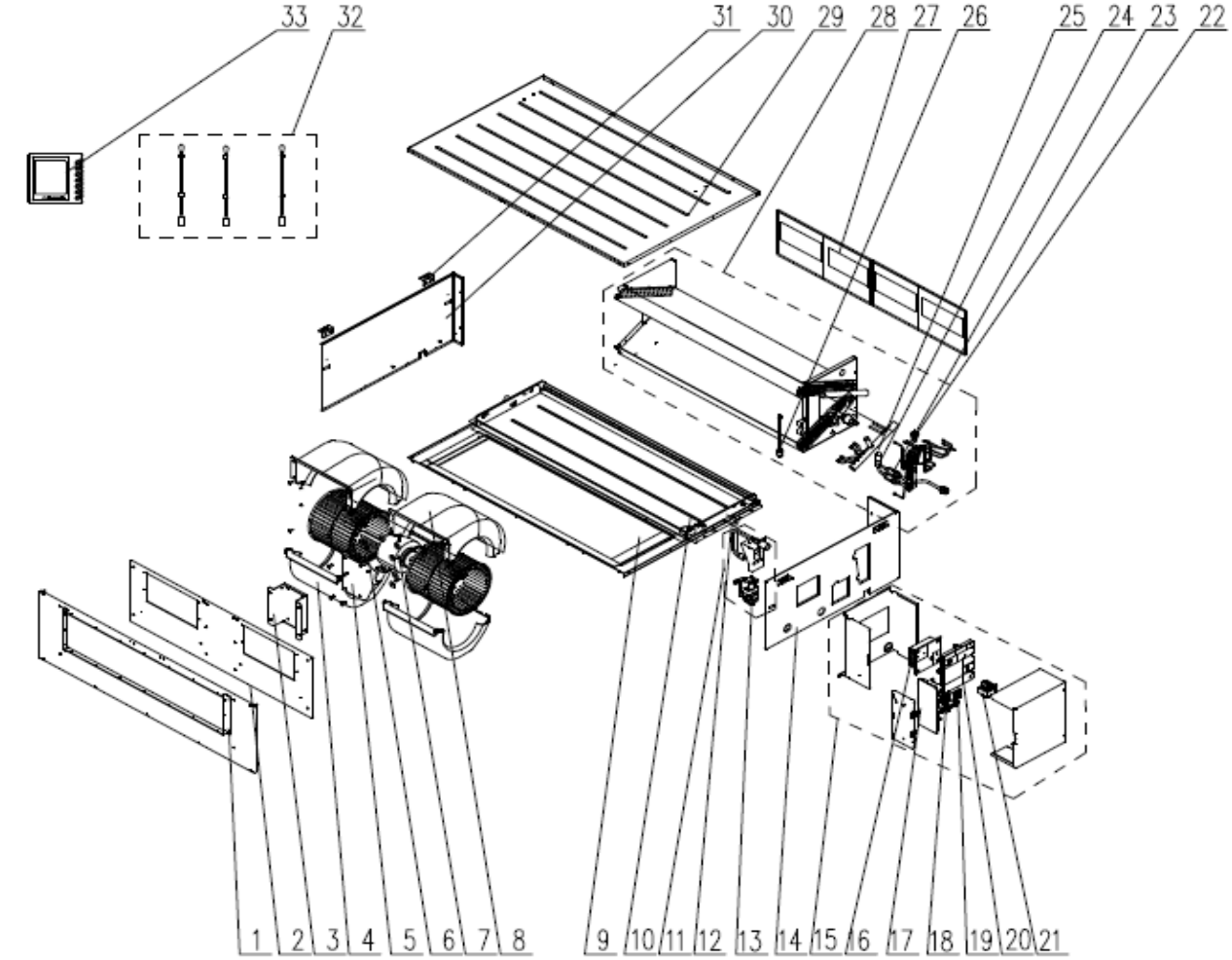

NO.	Model	GMV-ND160PHS/A-T	Qty.
	Product Code	CM810N0250	
	Part Name	Part Code	
1	Front Side Plate Sub-Assy	'01315200091	1
2	Blower Mounting Plate Sub-Assy	'01325200057	1
3	Support plate sub-assy (motor)	'0189520001401	1
4	Propeller Housing(Lower)	'26905200011	2
5	Motor Support	'01805200228	1
6	Centrifugal Fan	'10425200002	2
7	Brushless DC Motor	'15709400008	1
8	Propeller Housing(Upper)	'26905200010	2
9	Bottom Cover Plate Assy	'01265200045	1
10	Water Tray Assy	'01285200025	1
11	Water Pump Assy	'15405200081	1
12	Choke Plug of Drain Pipe	'76712455	2
13	Water Pump	'4313822001	1
14	Right Side Plate Assy	'01314100108	1
15	Electric Box Sub-Assy	'01395200479	1
16	Radiator	'49018000068	1
17	Main Board	'30226000064	1
18	Terminal Board	'42010259	1
19	Terminal Board	'4201800002601	1
20	Main Board	'30221000018	1

NO.	Model	GMV-ND160PHS/A-T	Qty.
	Product Code	CM810N0250	
	Part Name	Part Code	
21	Reactor	'43138000047	1
22	Current Divider	'07222706	1
23	Strainer	'0741410000601	2
24	Electronic Expansion Valve	'07334468	1
25	Electric Expand Valve Fitting	'4304413215	1
26	Water Level Switch	'4501270301	1
27	Filter Sub-Assy	'111253036	2
28	Evaporator Assy	'01024100157	1
29	Top Cover Board Assy	'01265200081	1
30	Left Side Plate Sub-Assy	'01315200064	1
31	Hook	'02205209	4
32	Sensor Sub-assy	'39008000103G	1
33	Display Board	'30296000040	1

Above data is subject to change without notice,pls reference the SP in global service website.

GMV-ND224PH/A-T：

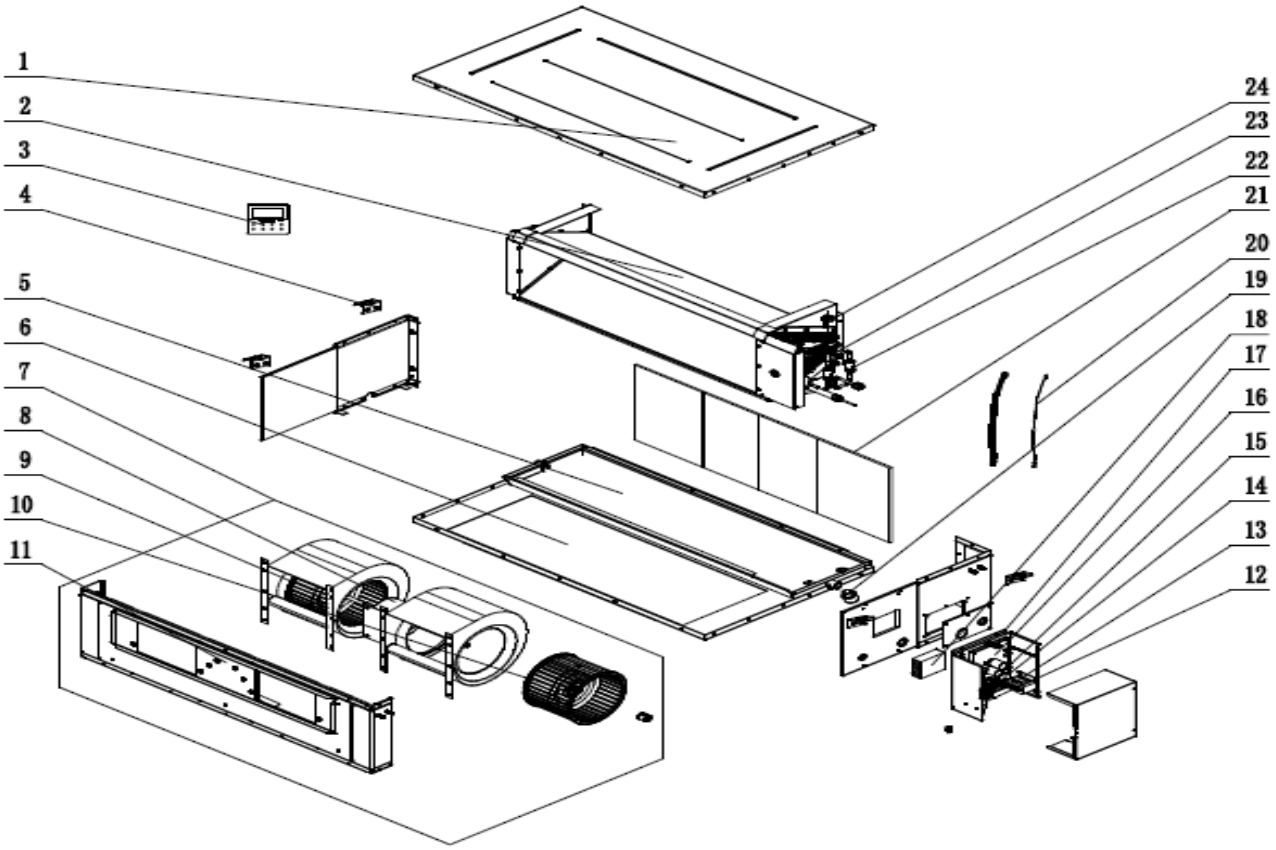

Exploded View of GMV-ND280PH/A-T：

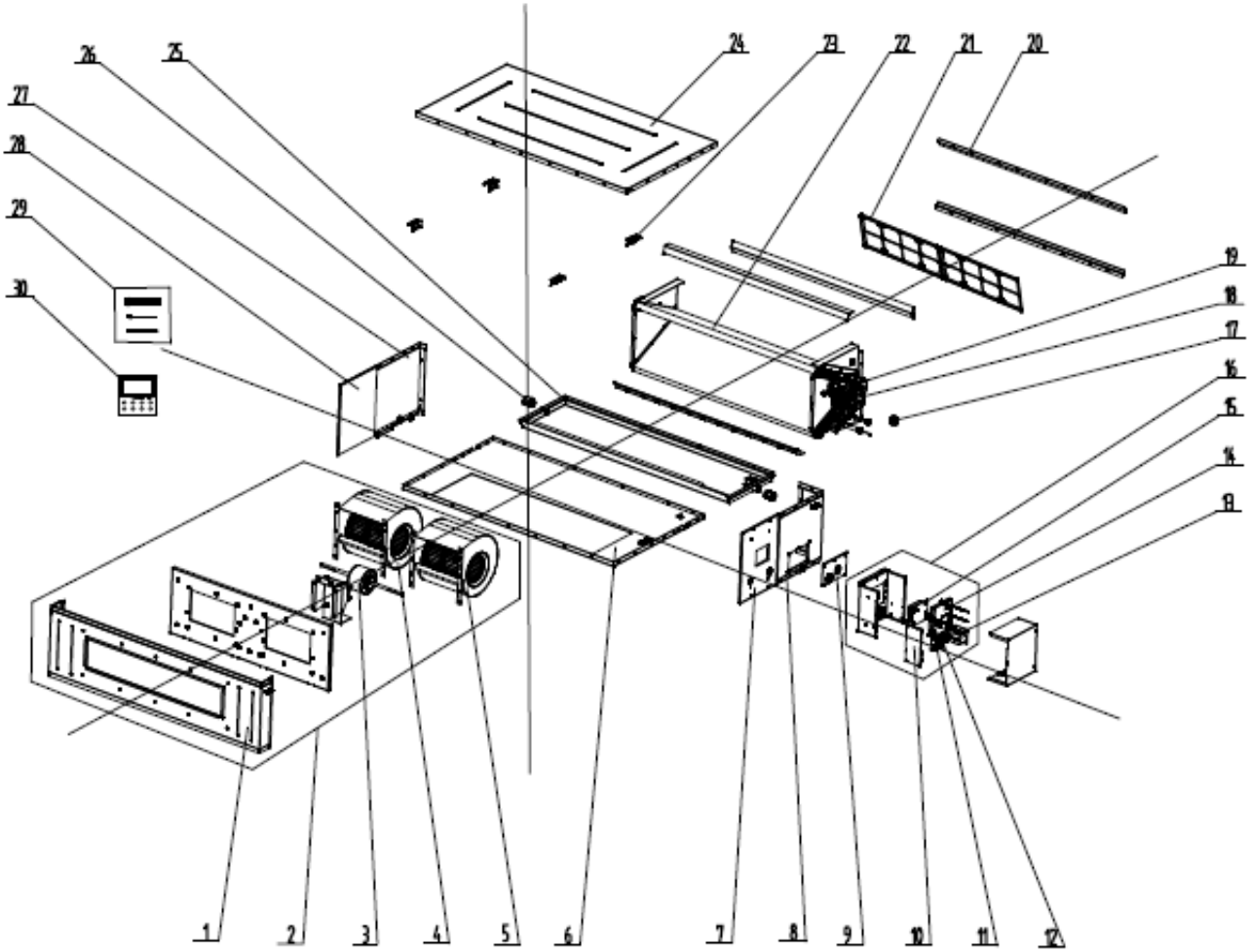

No.	Name of part	For the following unit		For the following unit	
		Unit	Product Code	Unit	Product Code
		GMV-ND224PH/A-T	CM800N3721	GMV-ND280PH/A-T	CM800N3731
		Part code	Quantity	Part code	Quantity
1	Front Side Plate Sub-Assy	'01314627	1	`01314315	1
2	Centrifugal fan assy	` 15404100051	1	`15404100061	1
3	Brushless DC Motor	'15704100009	1	`15704100009	1
4	Motor	'15705306	1	`15704118	1
5	Motor	'15705307	1	`1570411801	1
6	Lower Cover Plate Sub-Assy	'01265357	1	`01264213	1
7	Right Side Plate Assy	'01314321	1	`01314312	1
8	Front Side Plate assy 2	'01314627	1	`01314315	1
9	Seal Of Connection Pipe sub-assy	`01494709	1	`01494709	1
10	Main Board	` 30226000064	1	`30221000023	1
11	Terminal Board	` 4201800002601	1	`4201800002601	1
12	Terminal Board	` 42010259	1	`42010259	1
13	Reactor	`43130189	1	`43130189	1
14	Main Board	` 30221000018	1	`30226000064	1
15	Radiator	` 49018000068	1	`49018000068	1
16	Electric Box Assy	' 01394100450	1	`01394100450	1
17	Electric Expand Valve Fitting	'4304413205	1	`4304413205	1
18	Strainer	'0741410000601	1	`0741410000601	1
19	Electronic Expansion Valve	'07331139	1	` 07331139	1
20	filter guide groove	'02284107	2	` 02284105	2
21	Filter Sub-Assy	' 11725211	2	`11724102	2
22	Evaporator Assy	01024100119	1	` 01024100124	1
23	Hook	'02112466	4	02112466	4
24	Top Cover Board Sub-assy	'01265359	1	01264215	1
25	Water Tray Assy	'01284620	1	01284306	1
26	Choke Plug of Water Pipe	'76712454	2	76712454	2
27	Right Side Plate Sub-Assy	`01314321	1	01314312	1
28	Right Side Plate Sub-Assy	`01314100086'	1	01314100088	1
29	Sensor Sub-assy	'39008000103G	1	39008000103G	1
30	Display Board	' 30296000040	1	30296000040	1

Above data is subject to change without notice,pls reference the SP in global service website.

5.3 Low Static Pressure Duct Type

Exploded View of GMV-ND22PLS/A-T、GMV-ND25PLS/A-T、GMV-ND28PLS/A-T、GMV-ND32PLS/A-T GMV-ND36PLS/A-T：

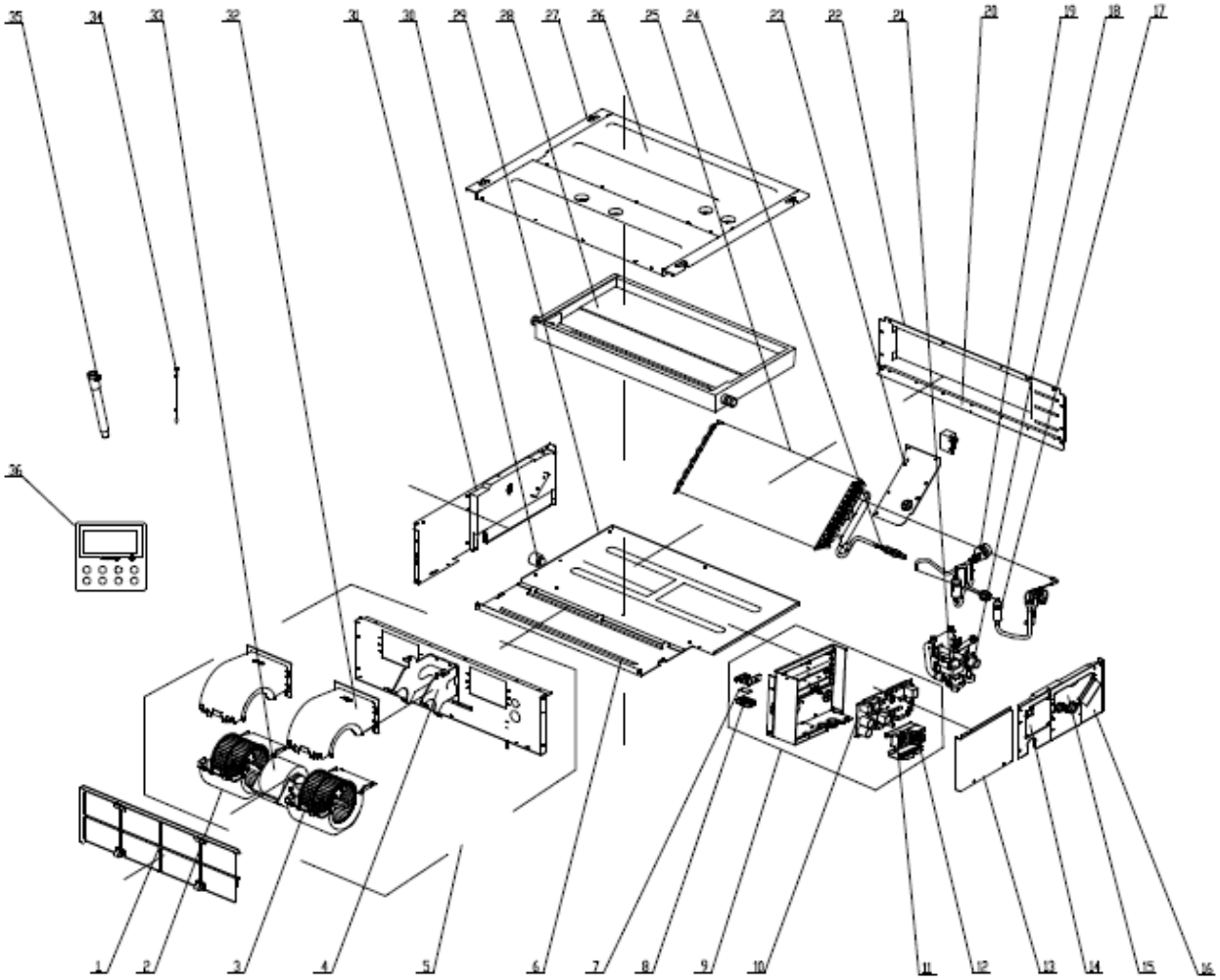

No.	Name of part	For the following unit		For the following unit	
		Unit	Product Code	Unit	Product Code
		GMV-ND22PLS/A-T	CM800N3370	GMV-ND32PLS/A-T	CM800N3390
		GMV-ND25PLS/A-T	CM800N3380	GMV-ND36PLS/A-T	CM800N3500
		GMV-ND28PLS/A-T	CM800N3490	/	/
		Part code	Quantity	Part code	Quantity
1	Filter Sub-Assy	'11725209	1	'11725209	1
2	Rear Volute Casing	'26905206	2	'26905206	2
3	Centrifugal Fan	'10425200	2	'10425200	2
4	Supporter	'01804100140	1	'01804100140	1
5	Blower Mounting Plate Sub-Assy	'01324100038	1	'01324100038	1
6	Cover Board (Fan Motor)	'01265300	1	'01265300	1
7	Humidity Sensor	0	0	0	0
8	Humidity Sensor Cover	0	0	0	0
9	Electric Box Assy	'01394100204	1	'01394100204	1

No.	Name of part	For the following unit		For the following unit	
		Unit	Product Code	Unit	Product Code
		GMV-ND22PLS/A-T	CM800N3370	GMV-ND32PLS/A-T	CM800N3390
		GMV-ND25PLS/A-T	CM800N3380	GMV-ND36PLS/A-T	CM800N3500
		GMV-ND28PLS/A-T	CM800N3490	/	/
		Part code	Quantity	Part code	Quantity
10	Main Board	'30226000029	1	'30226000029	1
11	Terminal Board	'42011106	1	'42011106	1
12	Terminal Board	'4201800002601	1	'4201800002601	1
13	Electric Box Cover	'01424100035	1	'01424100035	1
14	Sealplate Sub-assy (drainage)	'01495315	1	'01495315	1
15	Sealplate Sub-assy (outlet)	'01495316	1	'01495316	1
16	Left Side Plate Assy	'01315200087	1	'01315200087	1
17	Filter	'0741410000601	2	'0741410000601	2
18	Water Level Switch	` 45020216	1	'45020216	1
19	Electronic Expansion Valve	'07334463	1	'07334463	1
20	Cover of Air Outlet	'01265298	1	'01265298	1
21	Water Pump	'43130324	1	'43130324	1
22	Air Outlet Frame Assy	'01374636	1	'01374636	1
23	Sealplate Sub-Assy	'01495317	1	'01495317	1
24	Filter Sub-Assy	'11725209	1	'11128633	1
25	Evaporator Assy	`01024100108	1	'01024100109	1
26	Top Cover Board Assy	'01265325	1	'01265325	1
27	Supporter	'01895225	2	'01895225	2
28	Water Tray Assy	'01285332	1	'01285332	1
29	Bottom Cover Plate	'01265299	1	'01265299	1
30	Choke Plug of Drain Pipe	'76815214	2	'76815214	2
31	Right Side Plate Assy	'01315335	1	'01315335	1
32	Front Volute Casing	'26905205	2	'26905205	2
33	Fan Motor	'15704100001	1	'15704100001	1
34	Sensor Sub-Assy	'39004168G	1	'39004168G	1
35	Drain Hose Sub-Assy	` 05232050	1	` 05232050	1
36	Display Board	` 30296000040	1	` 30296000040	1

Above data is subject to change without notice,pls reference the SP in global service website.

Exploded View of GMV-ND40PLS/A-T、GMV-ND45PLS/A-T、GMV-ND50PLS/A-T：

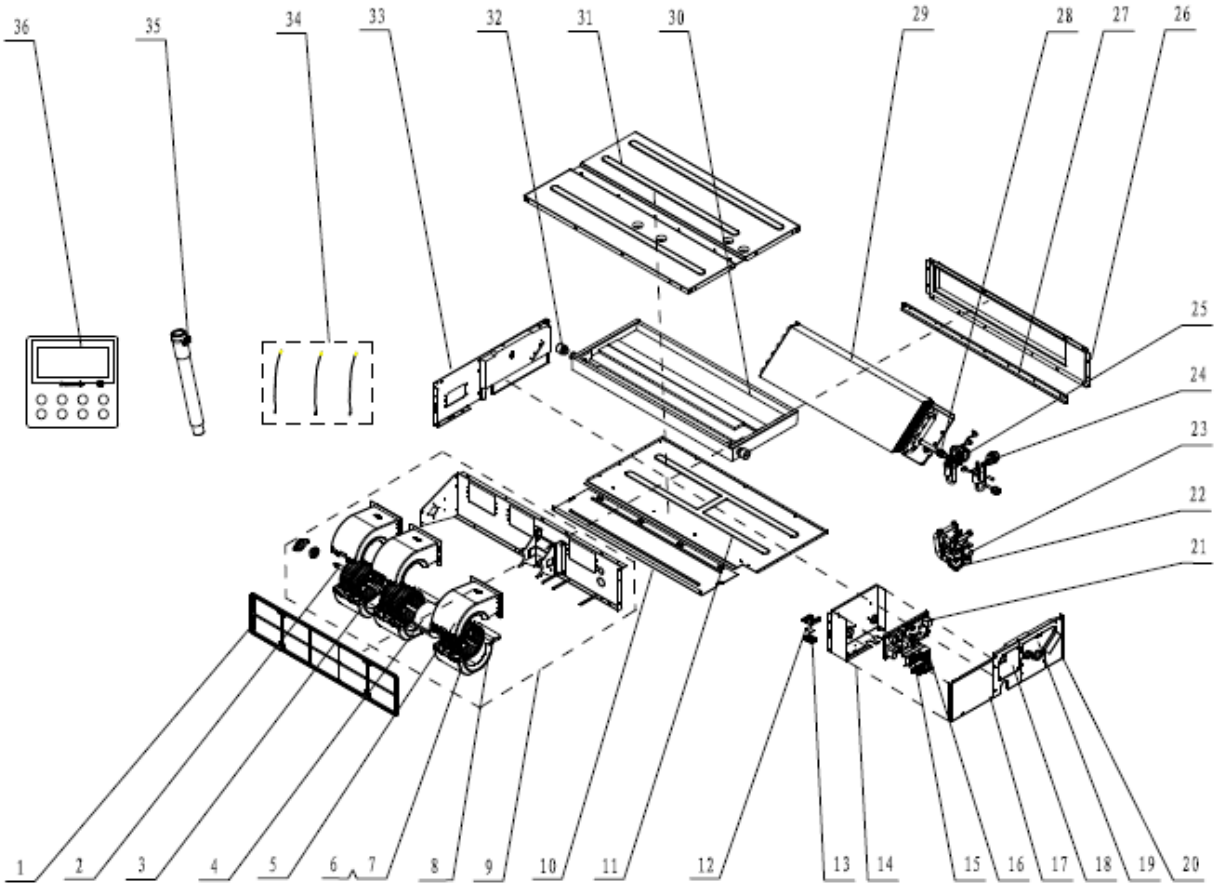

No.	Name of part	For the following unit	
		Unit	Product Code
		GMV-ND40PLS/A-T	CM800N3400
		GMV-ND45PLS/A-T	CM800N3410
		GMV-ND50PLS/A-T	CM800N3420
		Part code	Quantity
1	Filter Sub-Assy	'11725210	1
2	Rotary Axis Sub-Assy	'73018020	1
3	Joint Slack	'73018731	1
4	Fan Motor	'15704100001	1
5	Front Volute Casing	'26905205	3
6	Centrifugal Fan	'10425200	3
7	Fan Bearing	'76512210	1
8	Rear Volute Casing	'26905206	3
9	Centrifugal fan assy	'15404100023	1
10	Cover board (Fan motor)	'01265333	1
11	Bottom Cover Plate	'01265332	1
12	Humidity Sensor	0	0
13	Humidity Sensor Cover	0	0
14	Electric Box Assy	'01394100204	1
15	Terminal Board	'42011106	1
16	Terminal Board	'4201800002601	1

No.	Name of part	For the following unit	
		Unit	Product Code
		GMV-ND40PLS/A-T	CM800N3400
		GMV-ND45PLS/A-T	CM800N3410
		GMV-ND50PLS/A-T	CM800N3420
		Part code	Quantity
17	Electric Box Cover	'01424100035	1
18	Sealplate sub-assy (drainage)	'01495315	1
19	Sealplate sub-assy (outlet)	'01495316	1
20	Left Side Plate Assy	'01315200087	1
21	Main Board	'30226000029	1
22	Water Pump	'43130324	1
23	Water Level Switch	'45020216	1
24	Electronic Expansion Valve	'07334466	1
25	Strainer	'0741410000601	2
26	Air Outlet Frame Assy	'01374637	1
27	Cover of Air Outlet	'01265331	1
28	Filter Sub-Assy	'11128633	1
29	Evaporator Assy	'01024100110	1
30	Water Tray Assy	'01285333	1
31	Top Cover Board Assy	'01265328	1
32	Choke Plug of Drain Pipe	'76815214	2
33	Right Side Plate Assy	'01305263	1
34	Sensor Sub-assy	'39004168G	1
35	Drain Hose Sub-Assy	'05232050	1
36	Display Board	`30296000040	1

Above data is subject to change without notice,pls reference the SP in global service website.

Exploded View of GMV-ND56PLS/A-T、GMV-ND63PLS/A-T：

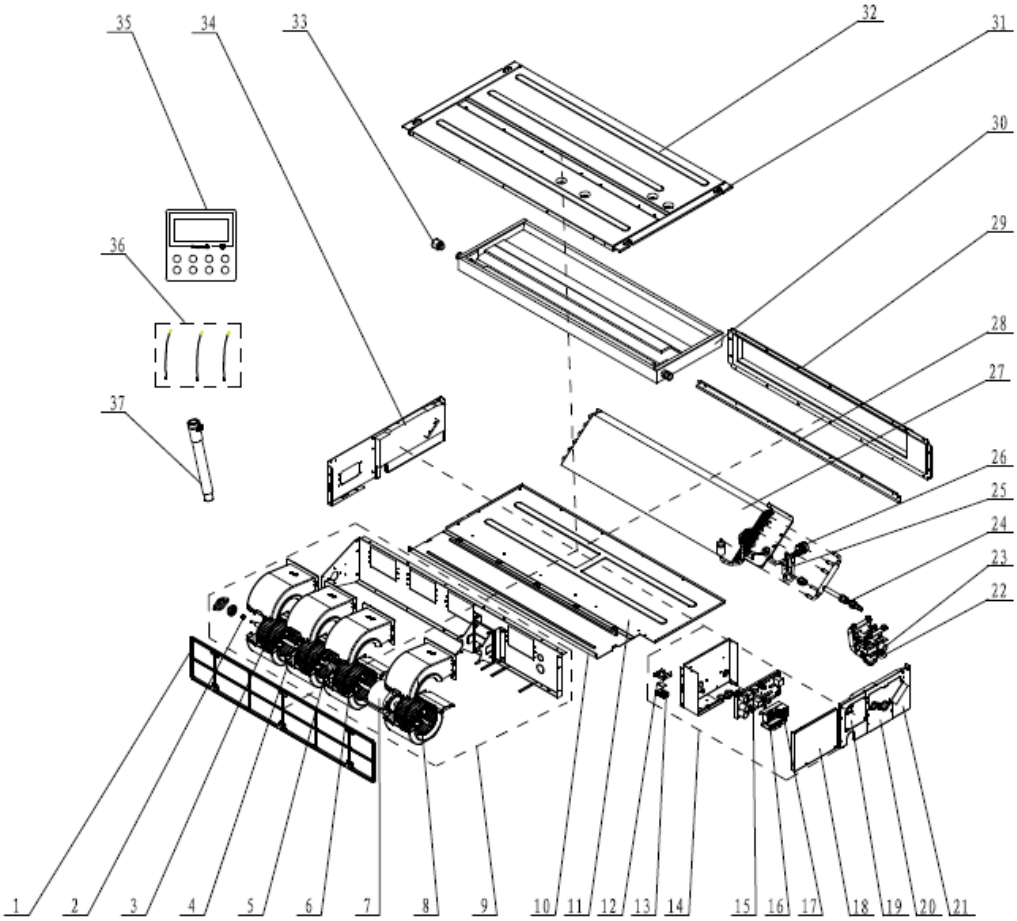

No.	Name of part	For the following unit		For the following unit	
		Unit	Product Code	Unit	Product Code
		GMV-ND56PLS/A-T	CM800N3510	GMV-ND63PLS/A-T	CM800N3430
		Part code	Quantity	Part code	Quantity
1	Filter Sub-Assy	'11725208	1	'11725208	1
2	Fan Bearing	'76512210	1	'76512210	1
3	Centrifugal Fan	'10425200	4	'10425200	3
4	Rotary Axis Sub-Assy	` 73018000029	1	` 73018000029	1
5	Joint Slack	'73018731	1	'73018731	1
6	Rear Volute Casing	'26905206	4	'26905206	3
7	Fan Motor	'15704100001	1	'15704100001	1
8	Front Volute Casing	'26905205	4	'26905205	3
9	Centrifugal fan assy	` 15404100024	1	` 15404100024	1
10	Cover board (Fan motor)	'01265338	1	'01265338	1
11	Bottom Cover Plate	'01265337	1	'01265337	1
12	Humidity Sensor	0	0	0	0
13	Humidity Sensor Cover	0	0	0	0
14	Electric Box Assy	'01394100204	1	'01394100204	1
15	Main Board	'30226000029	1	'30226000029	1
16	Terminal Board	'42011106	1	'42011106	1

No.	Name of part	For the following unit		For the following unit	
		Unit	Product Code	Unit	Product Code
		GMV-ND56PLS/A-T	CM800N3510	GMV-ND63PLS/A-T	CM800N3430
		Part code	Quantity	Part code	Quantity
17	Terminal Board	'4201800002601	1	'4201800002601	1
18	Electric Box Cover	'01424100035	1	'01424100035	1
19	Sealplate sub-assy (drainage)	'01495315	1	'01495315	1
20	Sealplate sub-assy (outlet)	'01495316	1	'01495316	1
21	Left Side Plate Assy	'01315200087	1	'01315200087	1
22	Water Level Switch	'45020216	1	'45018012	1
23	Water Pump	'43130324	1	'43130324	1
24	Filter Sub-Assy	'07210028	1	'07210028	1
25	Strainer	'0741410000601	2	'0741410000601	2
26	Electronic Expansion Valve	'07334466	1	'07334494	1
27	Evaporator Assy	'01024100111	1	'01024100029	1
28	Cover of Air Outlet	'01265335	1	'01265335	1
29	Air Outlet Frame Assy	'01374635	1	'01374635	1
30	Water Tray Assy	'01285334	1	'01285334	1
31	Supporter	'01895225	2	'01895225	2
32	Top Cover Board Assy	'01265339	1	'01265339	1
33	Choke Plug of Drain Pipe	'76815214	2	'76815214	2
34	Right Side Plate Assy	'01305263	1	'01305263	1
35	Display Board	` 30296000040	1	` 30296107	1
36	Sensor Sub-assy	'39004168G	1	'39004168G	1
37	Drain Hose Sub-Assy	'05232050	1	'05232050	1

Above data is subject to change without notice,pls reference the SP in global service website.

Exploded View of GMV-ND71PLS/A-T、GMV-ND80PLS/A-T：

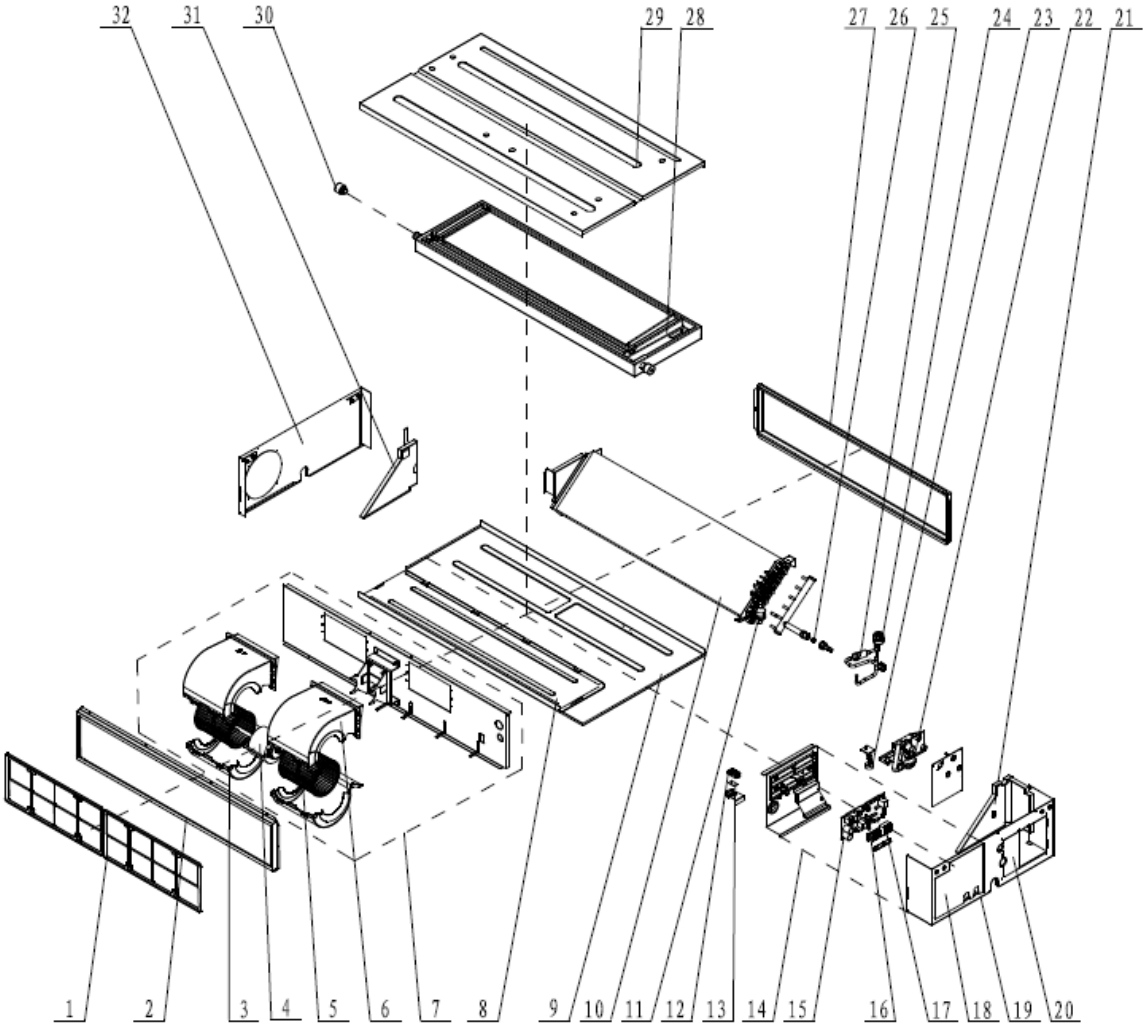

No.	Name of part	For the following unit	
		Unit	Product Code
		GMV-ND71PLS/A-T	CM800N3520
		GMV-ND80PLS/A-T	CM800N3440
		Part code	Quantity
1	Filter Sub-Assy	'11725207	2
2	Air Intake Side Board Sub-assy	'02225265	1
3	Rear volute casing	'26905209	2
4	Fan Motor	'15704100001	1
5	Centrifugal fan	'1041410101	2
6	Front volute casing	'26905208	2
7	Centrifugal fan assy	` 15404100014	1
8	Cover Of Air-In	'01265346	1
9	Bottom Cover Plate	'01265348	1
10	Evaporator Assy	'01024100112	1
11	Filter	'07415210	1
12	Humidity Sensor Cover	0	0

No.	Name of part	For the following unit	
		Unit	Product Code
		GMV-ND71PLS/A-T	CM800N3520
		GMV-ND80PLS/A-T	CM800N3440
		Part code	Quantity
13	Humidity Sensor	0	0
14	Electric Box Assy	'01394100205	1
15	Main Board	'30226000029	1
16	Terminal Board	'4201800002601	1
17	Terminal Board	'42011106	1
18	Electric Box Cover	'01425262	1
19	Left Side Plate Assy	'01315299	1
20	Seal Of Connection Pipe sub-assy	'01495238	1
21	Left Baffler Sub-Assy	'12505217	1
22	Water Pump	` 4313822001	1
23	Water Level Switch	'45018012	1
24	Electronic Expansion Valve	' 07334466	1
25	Strainer	'0741410000601	1
26	Filter Sub-Assy	'07210028	1
27	Air Outlet Side Board assy	'02225264	1
28	Water Tray Assy	'01285276	1
29	Top Cover Board Assy	'01265350	1
30	Choke Plug of Drain Pipe	'76815214	2
31	Right Baffler Sub-Assy	'12505216	1
32	Right Side Plate Assy	'01315298	1
33	Display Board	'30296000040	1
34	Sensor Sub-assy	'39004169G	1
35	Drain Hose Sub-Assy	'05232050	1
36	Hook	'02112466	4

Above data is subject to change without notice,pls reference the SP in global service website.

Exploded View of GMV-ND90PLS/A-T 、GMV-ND100PLS/A-T、GMV-ND112PLS/A-T、GMV-ND125PLS/A-T、GMV-ND140PLS/A-T：

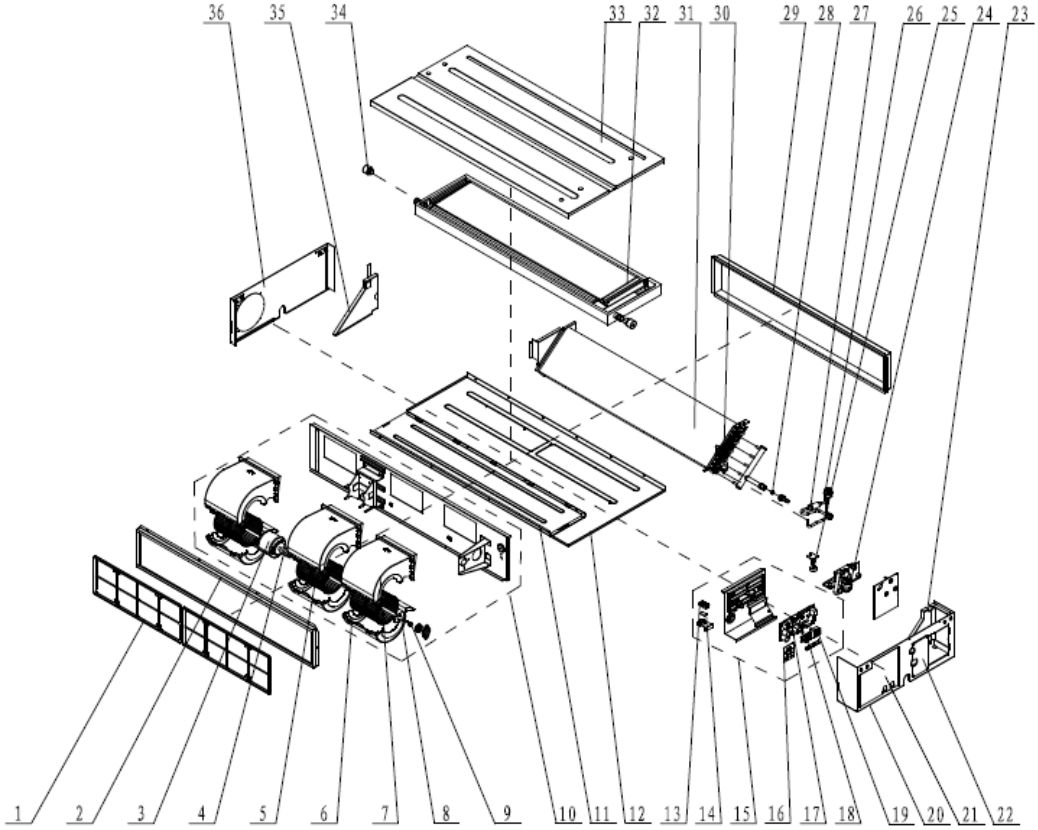

No.	Name of part	For the following unit		For the following unit	
		Unit	Product Code	Unit	Product Code
		GMV-ND90PLS/A-T	CM800N3450	GMV-ND125PLS/A-T	CM800N3480
		GMV-ND100PLS/A-T	CM800N3460	GMV-ND140PLS/A-T	CM800N3470
		GMV-ND112PLS/A-T	CM800N3530	/	/
		Part code	Quantity	Part code	Quantity
1	Filter Sub-Assy	'11725206	2	'11725206	2
2	Air intake side-board Sub-assy	'02225271	1	'02225271	1
3	Brushless DC Motor	'15705200005	1	'15705200005	1
4	Joint Slack	'73018731	1	'73018731	1
5	Centrifugal fan	'1041410101	3	'1041410101	3
6	Rear volute casing	'26905209	3	'26905209	3
7	Front volute casing	'26905208	3	'26905208	3
8	Rotary Axis Sub-Assy	'73018000030	1	'73018000030	1
9	Fan Bearing	'76512210	1	'76512210	1
10	Centrifugal fan assy	` 15404100015	1	` 15404100015	1
11	Cover Of Air-In	'01265344	1	'01265344	1
12	Bottom Cover Plate	'01265343	1	'01265343	1
13	Humidity Sensor Cover	0	0	0	0
14	Humidity Sensor	0	0	0	0
15	Electric Box Assy	'01394100242	1	'01394100242	1

No.	Name of part	For the following unit		For the following unit	
		Unit	Product Code	Unit	Product Code
		GMV-ND90PLS/A-T	CM800N3450	GMV-ND125PLS/A-T	CM800N3480
		GMV-ND100PLS/A-T	CM800N3460	GMV-ND140PLS/A-T	CM800N3470
		GMV-ND112PLS/A-T	CM800N3530	/	/
		Part code	Quantity	Part code	Quantity
16	Filter Board	'30226000051	1	'30226000051	1
17	Main Board	'30226000030	1	'30226000030	1
18	Terminal Board	'42011106	1	'42011106	1
19	Terminal Board	'4201800002601	1	'4201800002601	1
20	Right Side Plate Assy	'01314100055	1	'01314100055	1
21	Electric Box Cover	'01425262	1	'01425262	1
22	Seal Of Connection Pipe sub-assy	'01495238	1	'01495238	1
23	Left Baffler Sub-Assy	'12505217	1	'12505217	1
24	Water Pump	'4313822001	1	'4313822001	1
25	Water Level Switch	'45018012	1	'45018012	1
26	Electronic Expansion Valve	'07334468	1	'07334503	1
27	Strainer	'0741410000601	1	'0741410000601	1
28	Filter Sub-Assy	'07210028	1	'07210028	1
29	Border Plate of Air outlet Sub-Assy	'02225270	1	'02225270	1
30	Filter	'07415210	1	'07415210	1
31	Evaporator Assy	'01024100106	1	'01024100026	1
32	Water Tray Assy	'01285275	1	'01285275	1
33	Top Cover Board Assy	'0126534901	1	'0126534901	1
34	Choke Plug of Drain Pipe	'76815214	2	'76815214	2
35	Right Baffler Sub-Assy	'12505216	1	'12505216	1
36	Left Side Plate Assy	'01315299	1	'01315299	1
37	Display Board	'30296000040	1	'30296107	1
38	Sensor Sub-assy	'39004169G	1	'39004169G	1
39	Drain Hose Sub-Assy	'05232050	1	'05232050	1
40	Hook	'02112466	4	'02112466	4

5.4 4-way Cassette Type

Exploded View of GMV-ND28T/A-T、GMV-ND36T/A-T、 GMV-ND45T/A-T、GMV-ND50T/A-T、GMV-ND56T/A-T、GMV-ND63T/A-T、GMV-ND71T/A-T、GMV-ND80T/A-T、:

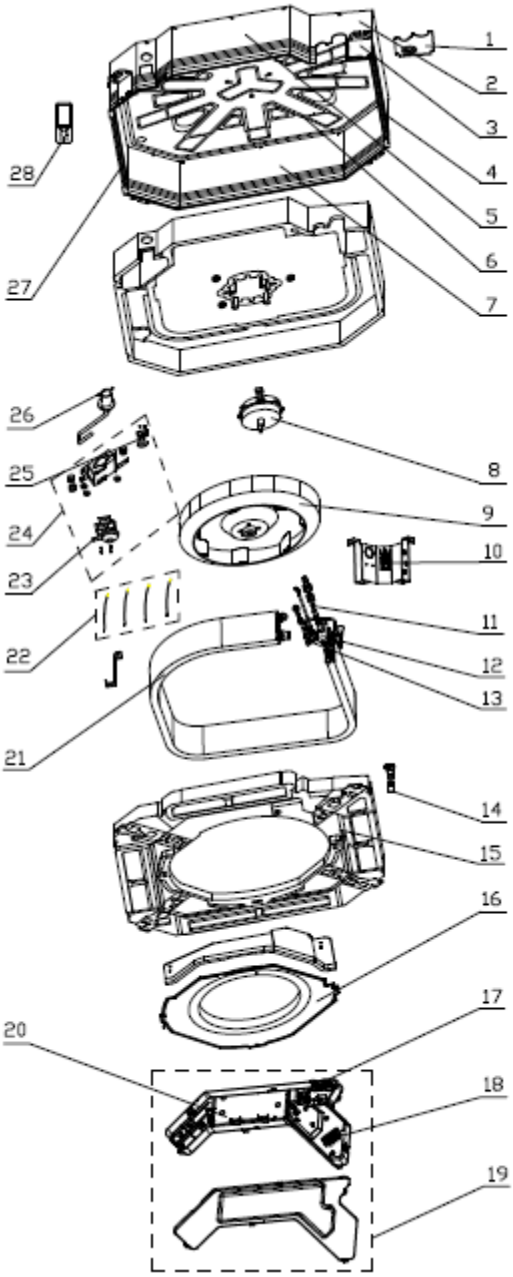

No.	Name of part	For the following unit		For the following unit	
		Unit	Product Code	Unit	Product Code
		GMV-ND28T/A-T	CM500N0380	GMV-ND36T/A-T	CM500N0390
		Part code	Quantity	Part code	Quantity
1	Tube Exit Plate Assy	'01382717	1	'01382717	1
2	Shell Assy	'01432701	1	'01432701	1
3	Body Installing Plate	'01332701	4	'01332701	4
4	Left Side Plate Assy	'01302740	1	'01302740	1
5	Front Side Plate assy	'01302717	1	'01302717	1
6	Base Plate Assy	'01222701	1	'01222701	1

No.	Name of part	For the following unit		For the following unit	
		Unit	Product Code	Unit	Product Code
		GMV-ND28T/A-T	CM500N0380	GMV-ND36T/A-T	CM500N0390
		Part code	Quantity	Part code	Quantity
7	Rear Side Plate Assy	'01302719	1	'01302719	1
8	Brushless DC Motor	'15704100007	1	'15704100007	1
9	Centrifugal Fan	'10312721	1	'10312721	1
10	Humidity Sensor	/	0	/	0
11	Filter Sub-Assy	0	0	'11128633	1
12	Strainer	'07415200002	1	'07415200002	1
13	Electronic Expansion Valve	'07334463	1	'07334463	1
14	Drain Hose Sub-Assy	'05232050	1	'05232050	1
15	Water Tray Assy	' 01289400013	1	' 01289400013	1
16	Diversion Circle	'10372701	1	'10372701	1
17	Terminal Board	'4201800002601	1	'4201800002601	1
18	Terminal Board	'42011222	1	'42011222	1
19	Electric Box Assy	'01394100209	1	'01394100209	1
20	Main Board	'30226000029	1	'30226000029	1
21	Evaporator Assy	` 01024100118	1	'01024100113	1
22	Sensor Sub-assy	'39008000013G	1	'39008000013G	1
23	Water Pump	'43130324	1	'43130324	1
24	Water Pump Assy	` 15404100046	1	` 15404100046	1
25	Water Level Switch	` 45020216	1	` 45020216	1
26	Pump Drainpipe	'05232721	1	'05232721	1
27	Right Side Plate Assy	'01302710	1	'01302710	1
28	Remote Controller	'30510589	1	'30510589	1

Above data is subject to change without notice,pls refer the SP in global service website.

No.	Name of part	For the following unit		For the following unit	
		Unit	Product Code	Unit	Product Code
		GMV-ND45T/A-T	CM500N0400	GMV-ND56T/A-T	CM500N0420
		GMV-ND50T/A-T	CM500N0410	GMV-ND63T/A-T	CM500N0430
		/	/	GMV-ND71T/A-T	CM500N0440
		/	/	GMV-ND80T/A-T	CM500N0450
		Part code	Quantity	Part code	Quantity
1	Tube Exit Plate Assy	'01382717	1	'01382715	1
2	Shell Assy	'01432701	1	'01432704	1
3	Body Installing Plate	'01332701	4	'01332701	4

No.	Name of part	For the following unit		For the following unit	
		Unit	Product Code	Unit	Product Code
		GMV-ND45T/A-T	CM500N0400	GMV-ND56T/A-T	CM500N0420
		GMV-ND50T/A-T	CM500N0410	GMV-ND63T/A-T	CM500N0430
		/	/	GMV-ND71T/A-T	CM500N0440
		/	/	GMV-ND80T/A-T	CM500N0450
		Part code	Quantity	Part code	Quantity
4	Left Side Plate Assy	'01302740	1	'01302715	1
5	Front Side Plate assy	'01302717	1	'01302718	1
6	Base Plate Assy	'01222701	1	'01222701	1
7	Rear Side Plate Assy	'01302719	1	'01302714	1
8	Brushless DC Motor	'15704100007	1	'15709400004	1
9	Centrifugal Fan	'10312721	1	'10312705	1
10	Humidity Sensor	/	0	/	0
11	Filter Sub-Assy	'/	0	0	0
12	Strainer	'07415200002	1	'0741410000601	2
13	Electronic Expansion Valve	'07334463	1	'07334466	1
14	Drain Hose Sub-Assy	'05232050	1	'05232702	1
15	Water Tray Assy	'01289400013	1	'01289400013	1
16	Diversion Circle	'10372701	1	'10372701	1
17	Terminal Board	'4201800002601	1	'4201800002601	1
18	Terminal Board	'42011222	1	'42011222	1
19	Electric Box Assy	'01394100209	1	'01394100209	1
20	Main Board	'30226000029	1	'30226000029	1
21	Evaporator Assy	'01024100114	1	'01024100115	1
22	Sensor Sub-assy	'39008000013G	1	'39008000013G	1
23	Water Pump	'43130324	1	'43130324	1
24	Water Pump Assy	'15404100046	1	01332752	1
25	Water Level Switch	'45020216	1	'45020216	1
26	Pump Drainpipe	'05232721	1	'05230026	1
27	Right Side Plate Assy	'01302710	1	'01302716	1
28	Remote Controller	'30510589	1	'30510589	1

Above data is subject to change without notice,pls reference the SP in global service website.

Above data is subject to change without notice,pls refer the SP in global service website.

Exploded View of GMV-ND90T/A-T、GMV-ND100T/A-T、GMV-ND112T/A-T、 GMV-ND125T/A-T、GMV-ND140T/A-T：

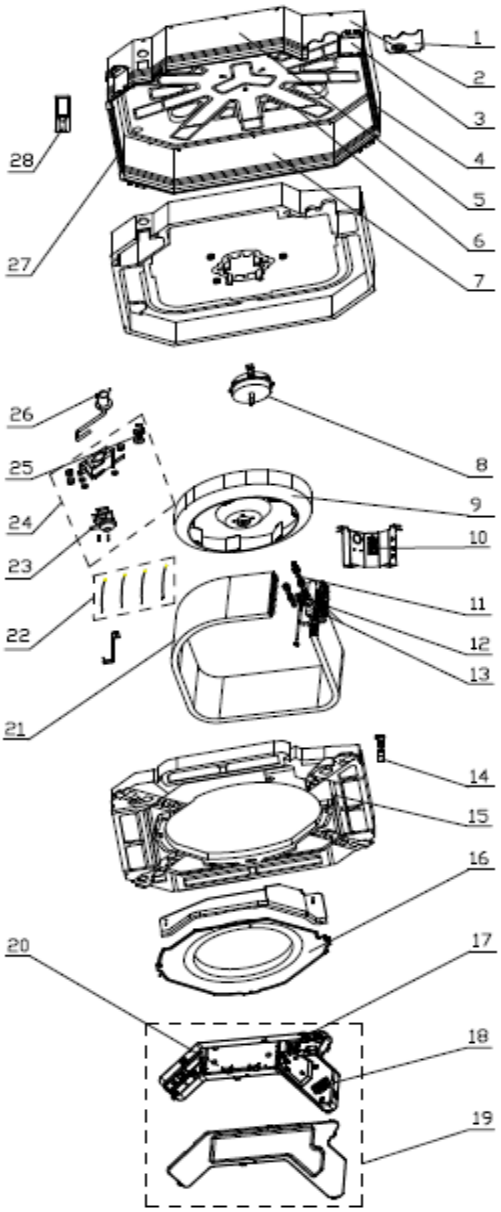

No.	Name of part	For the following unit	
		Unit	Product Code
		GMV-ND90T/A-T	CM500N0460
		GMV-ND100T/A-T	CM500N0470
		GMV-ND112T/A-T	CM500N0480
		GMV-ND125T/A-T	CM500N0480
		GMV-ND140T/A-T	CM800N0550
		Part code	Quantity
1	Tube Exit Plate Assy	'01382715	1
2	Shell Assy	'01432702	1
3	Body Installing Plate	'01332701	4
4	Left Side Plate Assy	'01302711	1

No.	Name of part	For the following unit	
		Unit	Product Code
		GMV-ND90T/A-T	CM500N0460
		GMV-ND100T/A-T	CM500N0470
		GMV-ND112T/A-T	CM500N0480
		GMV-ND125T/A-T	CM500N0480
		GMV-ND140T/A-T	CM800N0550
		Part code	Quantity
5	Front Side Plate assy	'01302713	1
6	Base Plate Assy	'01222701	1
7	Rear Side Plate Assy	'01302709	1
8	Brushless DC Motor	'15709400003	1
9	Centrifugal Fan	'10310101	1
10	Humidity Sensor	0	0
11	Filter Sub-Assy	0	0
12	Electronic Expansion Valve	'07334468	1
13	Strainer	'0741410000601	2
14	Drain Hose Sub-Assy	'05232702	1
15	Water Tray Assy	'01289400013	1
16	Diversion Circle	'10372722	1
17	Terminal Board	'4201800002601	1
18	Terminal Board	'42011222	1
19	Electric Box Assy	'01394100209	1
20	Main Board	'30226000029	1
21	Evaporator Assy	'01024100116	1
22	Sensor Sub-assy	'39008000012G	1
23	Water Pump	'43130324	1
24	Water Pump Assy	'15404100044	1
25	Water Level Switch	'45020216	1
26	Pump Drainpipe	'05230026	1
27	Right Side Plate Assy	'01302712	1
28	Remote Controller	'30510589	1

Above data is subject to change without notice,pls reference the SP in global service website.

Exploded View of GMV-ND160T/A-T：

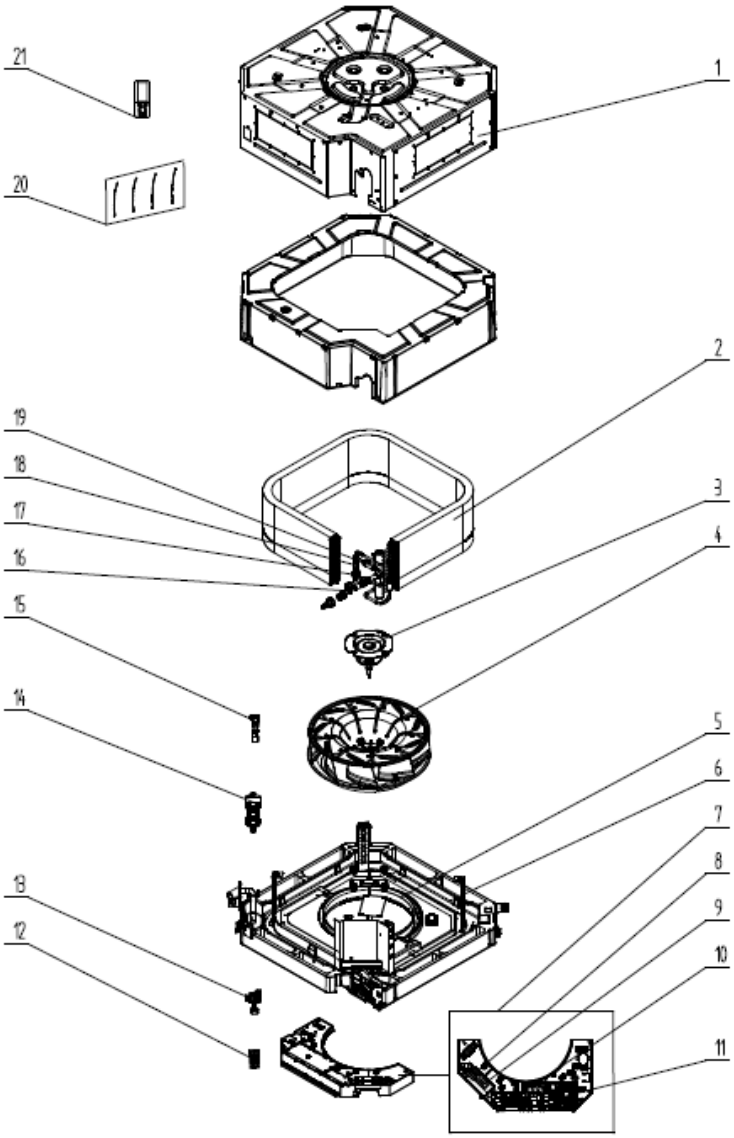

Note: Details of this model are not issued yet. This list is made according to domestic sales details and cannot be used to place order for accessories. It will be updated once the following details are issued.

No.	Name of part	For the following unit	
		Unit	Product Code
		GMV-ND160T/A-T	CM500N0660
		Part code	Quantity
1	Tube Exit Plate Assy	'02229400002	1
2	Shell Assy	'01519400001	1
3	Body Installing Plate	'01329420	4
4	Left Side Plate Assy	'01319448	1
5	Front Side Plate assy	'01319447	1
6	Base Plate Assy	'02229400001	1
7	Rear Side Plate Assy	'01319446	1
8	Brushless DC Motor	'15709400002	1

No.	Name of part	For the following unit	
		Unit	Product Code
		GMV-ND160T/A-T	CM500N0660
		Part code	Quantity
9	Centrifugal Fan	'10429401	1
10	Humidity Sensor	/	0
11	Filter Sub-Assy	'07210029	1
12	Electronic Expansion Valve	'07334468	1
13	Strainer	'0741410000601	2
14	Drain Hose Sub-Assy	'05232702	1
15	Water Tray Assy	'01289400002	1
16	Diversion Circle	'10479401	1
17	Terminal Board	'42011222	1
18	Terminal Board	'4201800002601	1
19	Electric Box Assy	'01394100298	1
20	Main Board	'30226000027	1
21	Evaporator Assy	'01024100103	1
22	Sensor Sub-assy	'39008000012G	1
23	Water Pump	'4313822001	1
24	Water Pump Assy	'15404100052	1
25	Water Level Switch	'4501801203	1
26	Pump Drainpipe	'05339401	1
27	Right Side Plate Assy	'01319448	2
28	Remote Controller	'30510589	1

Above data is subject to change without notice,pls refer the SP in global service website.

5.5 Compact 4-way Cassette Type

Exploded View of GMV-ND22T/B-T、GMV-ND28T/B-T、GMV-ND36T/B-T、GMV-ND45T/B-T、GMV-ND50T/B-T、GMV-ND56T/B-T

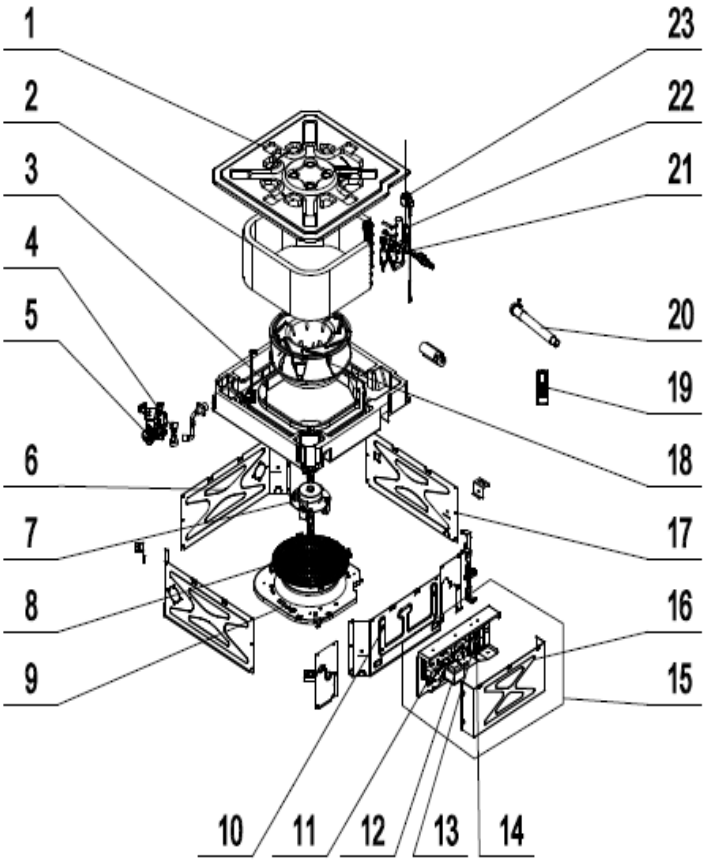

NO	Model	GMV-ND22T/B-T GMV-ND28T/B-T GMV-ND36T/B-T GMV-ND45T/B-T GMV-ND50T/B-T GMV-ND56T/B-T	Qty
	Product Code	CM500N0610 CM500N0620 CM500N0630 CM500N0640 CM500N0600 CM500N0650	
	Part Name	Part Code	
1	Base Plate Assy	02229400007	1
2	Evaporator Assy	01024100137	1
3	Water Tray Assy	01289400004	1
4	Liquid Level Switch	450102013	1
5	Water Pump	43138000024	1
6	Right Side Plate Sub-Assy	01319400013	2
7	Brushless DC Motor	15709400004	1
8	Rear Grill	26909400007	1
9	Diversion Circle	10479400001	1
10	Front Side Plate Sub-Assy	01319400014	1
11	Main Board	30226000029	1
12	Transformer	43118000015	1
13	Terminal Board	42011106	1
14	Terminal Board	4201800002601	1
15	Electric Box Assy	01394100456	1
16	Electric Box Cover	01429400003	1
17	Left Side Plate Sub-Assy	01319400012	1
18	Centrifugal Fan	10429400001	1

NO	Model	GMV-ND22T/B-T GMV-ND28T/B-T GMV-ND36T/B-T GMV-ND45T/B-T GMV-ND50T/B-T GMV-ND56T/B-T	Qty
	Product Code	CM500N0610 CM500N0620 CM500N0630 CM500N0640 CM500N0600 CM500N0650	
	Part Name	Part Code	
19	Remote Controller	30510589	1
20	Drain Hose Sub-Assy	05232050	1
21	Strainer	0741410000601	2
22	Electronic Expansion Valve	07334463	1
23	Electric Expand Valve Fitting	4304413215	1

Above data is subject to change without notice,pls reference the SP in global service website.

5.6 2-way Cassette Type

Exploded View of GMV-ND28TS/A-T、GMV-ND36TS/A-T、GMV-ND45TS/A-T、GMV-ND50TS/A-T、GMV-ND56TS/A-T、GMV-ND63TS/A-T、GMV-ND71TS/A-T：

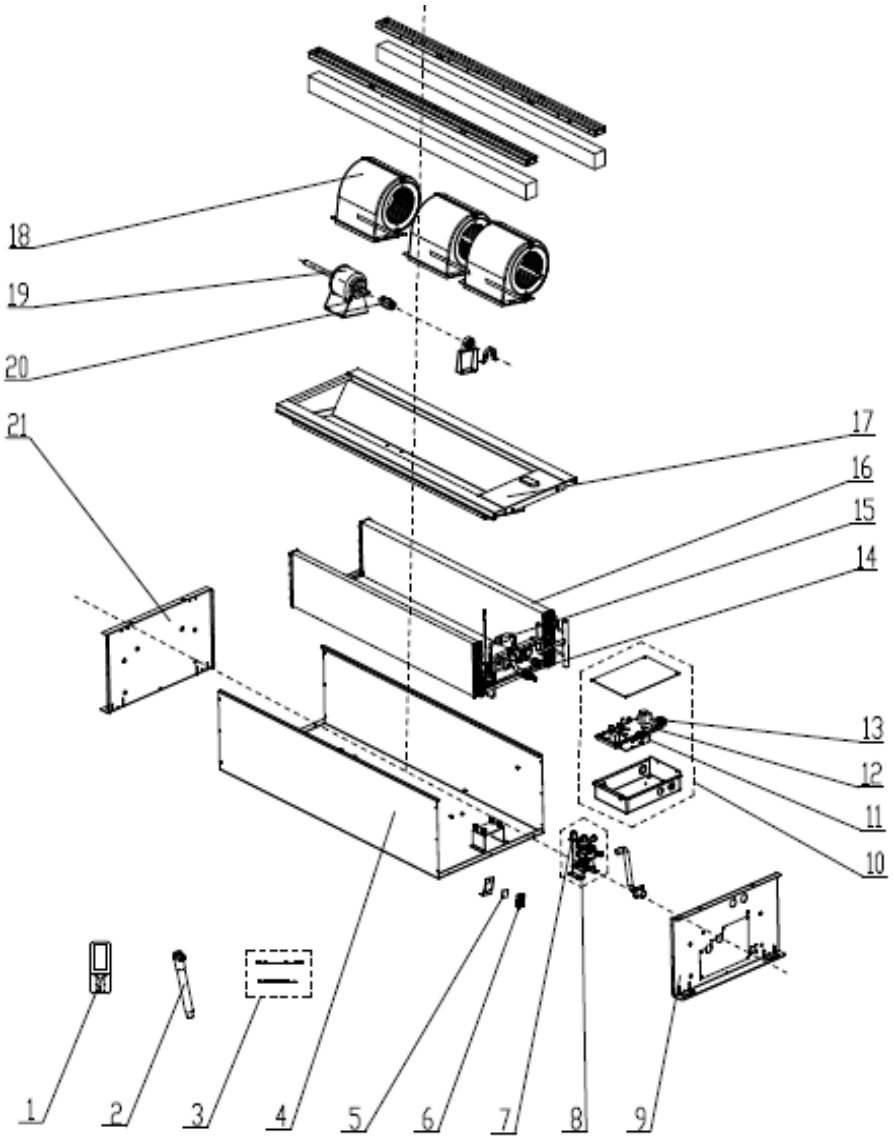

NO	Model	GMV-ND28TS/A-T、GMV-ND36TS/A-T、GMV-ND45TS/A-T、GMV-ND50TS/A-T	GMV-ND56TS/A-T、GMV-ND63TS/A-T、GMV-ND71TS/A-T	Qty
	Product Code	CM500N0680 CM500N0690 CM500N0700 CM500N0710	CM500N0720 CM500N0730 CM500N0740	
	Part Name	Part Code	Part Code	
1	Remote Controller	30510589	30510589	1
2	Drain Hose Sub-Assy	05232050	05232050	1
3	Sensor Sub-assy	39008000013G	39008000013G	1
4	Seat Board Sub-Assy	02224100024	02224100024	1
7	Water Level Switch	4501270301	4501270301	1
8	Water Pump	43138220	43138220	1
9	Right Side Plate Sub-Assy	01314100080	01314100080	1
10	Electric Box Assy	01394100557	01394100557	1
11	Terminal Board	4201800002601	4201800002601	1
12	Main Board	30226000029	30226000029	1
13	Terminal Board	4201115404	4201115404	1
14	Electronic Expansion Valve	07334494	07334493	1
15	Strainer	0741410000601	0741410000601	2
16	Evaporator Assy	01024100094	01024100093	1
17	Water Tray Sub-Assy	01284100137	01284100137	1
18	Volute casing Sub-assy	22202030	22202030	3
		22202029	22202029	3
19	Brushless DC Motor	15704100003	15704100003	1
20	Joint Slack	73018731	73018731	1
21	Left Side Plate Sub-Assy	01314100104	01314100104	1

Above data is subject to change without notice,pls reference the SP in global service website.

5.7 1-way Cassette Type

Exploded View of GMV-ND22TD/A-T、GMV-ND28TD/A-T、GMV-ND36TD/A-T、GMV-ND45TD/A-T、GMV-ND50TD/A-T：

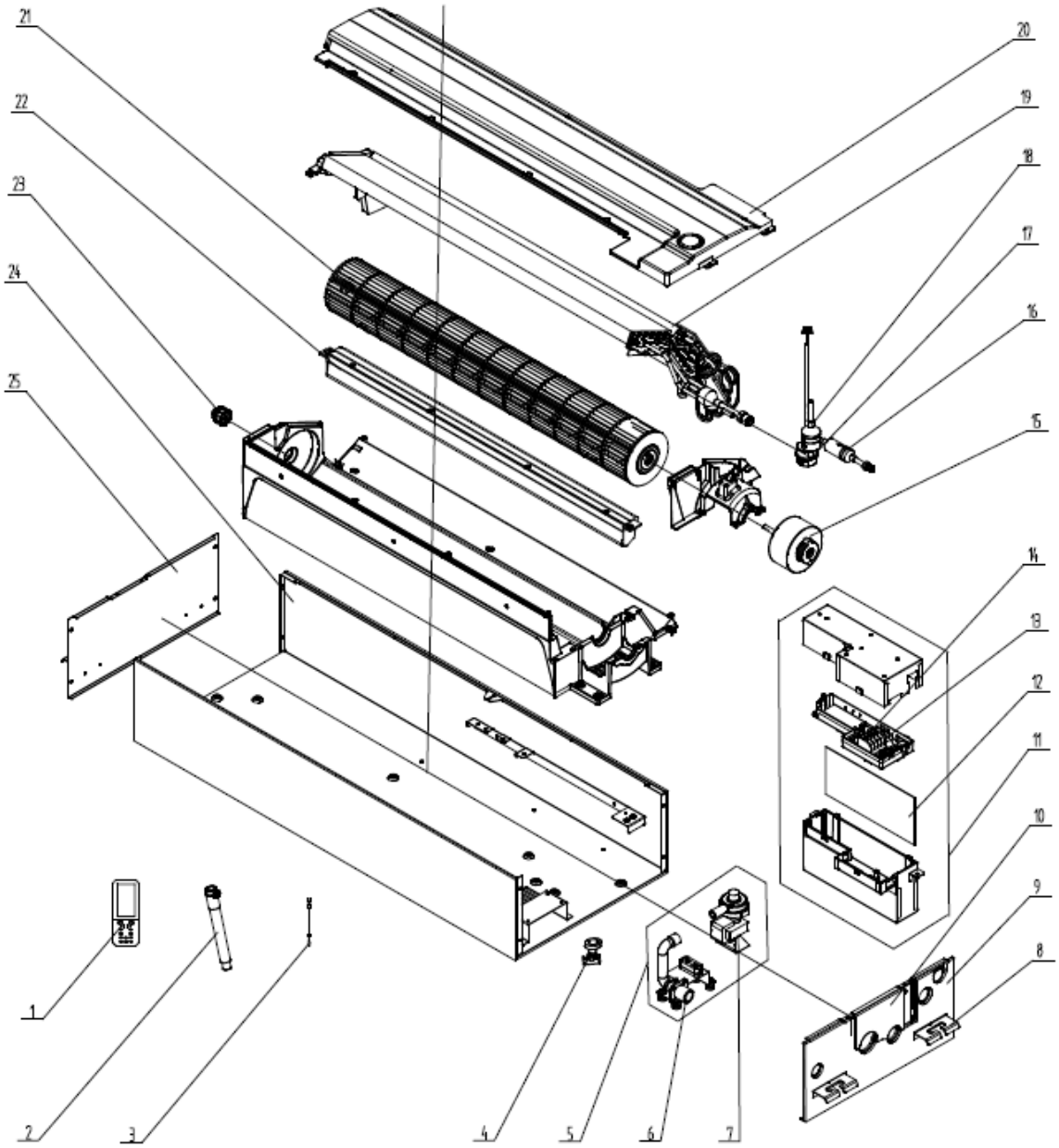

No.	Name of part	For the following unit		For the following unit	
		Unit	Product Code	Unit	Product Code
		GMV-ND28TD/A-T	CM502N0100	GMV-ND36TD/A-T	CM502N0110
		Part code	Quantity	Part code	Quantity
1	Remote Controller	' 30510589	1	' 30510589	1
2	Drain Hose Sub-Assy	‘05232050	1	'05232050	1
3	Temperature Sensor	` 39008000079G	1	'39008000079G	1
4	Humidity Sensor Cover	0	0	0	0
5	Humidity Sensor	0	0	0	0
6	Water Level Switch	'4501270301	1	'4501270301	1

No.	Name of part	For the following unit		For the following unit	
		Unit	Product Code	Unit	Product Code
		GMV-ND28TD/A-T	CM502N0100	GMV-ND36TD/A-T	CM502N0110
		Part code	Quantity	Part code	Quantity
7	Water Pump Assy	'15404100005	1	'15404100005	1
8	Pump Drainpipe	'26905288	1	'26905288	1
9	Water Pump	'4313822001	1	'4313822001	1
10	Hook	'02112466	4	'02112466	4
11	Right Side Plate Sub-Assy	'01314100023	1	'01314100023	1
12	Tube Exit Plate Assy	'01344100020	1	'01344100020	1
13	Electric Box Assy	'01394100396	1	'01394100396	1
14	Main Board	'30226000029	1	'30226000029	1
15	Terminal Board	'4201026603	1	'4201026603	1
16	Terminal Board	'4201800002601	1	'4201800002601	1
17	Main Board	'30226000029	1	'30226000029	1
18	Brushless DC Motor	'1501214301	1	'1501214301	1
19	Strainer	' 0741410002501	1	' 0741410002501	1
20	Electronic Expansion Valve	'07334492	1	'07334492	1
21	Filter	'07415210	1	'07415210	1
22	Filter Sub-Assy	0	0	0	0
23	Evaporator Assy	'0102410009501	1	' 01024100095	1
24	Water Tray Sub-Assy	'01284100011	1	'01284100011	1
25	Cross Flow Fan	'10454100001	1	'10454100001	1
26	Helicoid Tongue sub-assy	'02224100007	1	'02224100007	1
27	O-Gasket of Cross Fan Bearing	'76512203	1	'76512203	1
28	Chassis Assy	'01194100007	1	'01194100007	1
29	Left Side Plate Sub-Assy	'01314100022	1	'01314100022	1

Above data is subject to change without notice,pls reference the SP in global service website.

No.	Name of part	For the following unit		For the following unit	
		Unit	Product Code	Unit	Product Code
		GMV-ND45TD/A-T	CM502N0120	GMV-ND50TD/A-T	CM502N0130
		Part code	Quantity	Part code	Quantity
1	Remote Controller	'30510589	1	'30510589	1
2	Drain Hose Sub-Assy	'05232050	1	'05232050	1
3	Temperature Sensor	'39008000079G	1	'39008000079G	1
4	Humidity Sensor Cover	0	0	0	0
5	Humidity Sensor	0	0	0	0
6	Water Level Switch	'4501270301	1	'4501270301	1
7	Water Pump Assy	'15404100005	1	'15404100005	1
8	Pump Drainpipe	'26905288	1	'26905288	1
9	Water Pump	'4313822001	1	'4313822001	1
10	Hook	'02112466	4	'02112466	4
11	Right Side Plate Sub-Assy	'01314100023	1	'01314100023	1
12	Tube Exit Plate Assy	'01344100020	1	'01344100020	1
13	Electric Box Assy	'01394100396	1	'01394100396	1
14	Main Board	'30226000029	1	'30226000029	1
15	Terminal Board	'4201026603	1	'4201026603	1
16	Terminal Board	'4201800002601	1	'4201800002601	1
17	Main Board	'30226000029	1	'30226000029	1
18	Brushless DC Motor	'1501214301	1	'1501214301	1
19	Strainer	' 0741410002501	1	' 0741410002501	1
20	Electronic Expansion Valve	'07334494	1	'07334494	1
21	Filter	'07415210	1	'07415210	1
22	Filter Sub-Assy	0	0	0	0
23	Evaporator Assy	'01024100014	1	'01024100014	1
24	Water Tray Sub-Assy	'01284100011	1	'01284100011	1
25	Cross Flow Fan	'10454100001	1	'10454100001	1
26	Helicoid Tongue sub-assy	'02224100007	1	'02224100007	1
27	O-Gasket of Cross Fan Bearing	'76512203	1	'76512203	1
28	Chassis Assy	'01194100007	1	'01194100007	1
29	Left Side Plate Sub-Assy	'01314100022	1	'01314100022	1

Above data is subject to change without notice,pls reference the SP in global service website.

5.8 Floor Ceiling Type

Exploded View of GMV-ND28ZD/A-T、 GMV-ND36ZD/A-T、GMV-ND50ZD/A-T、GMV-ND56ZD/A-T ：

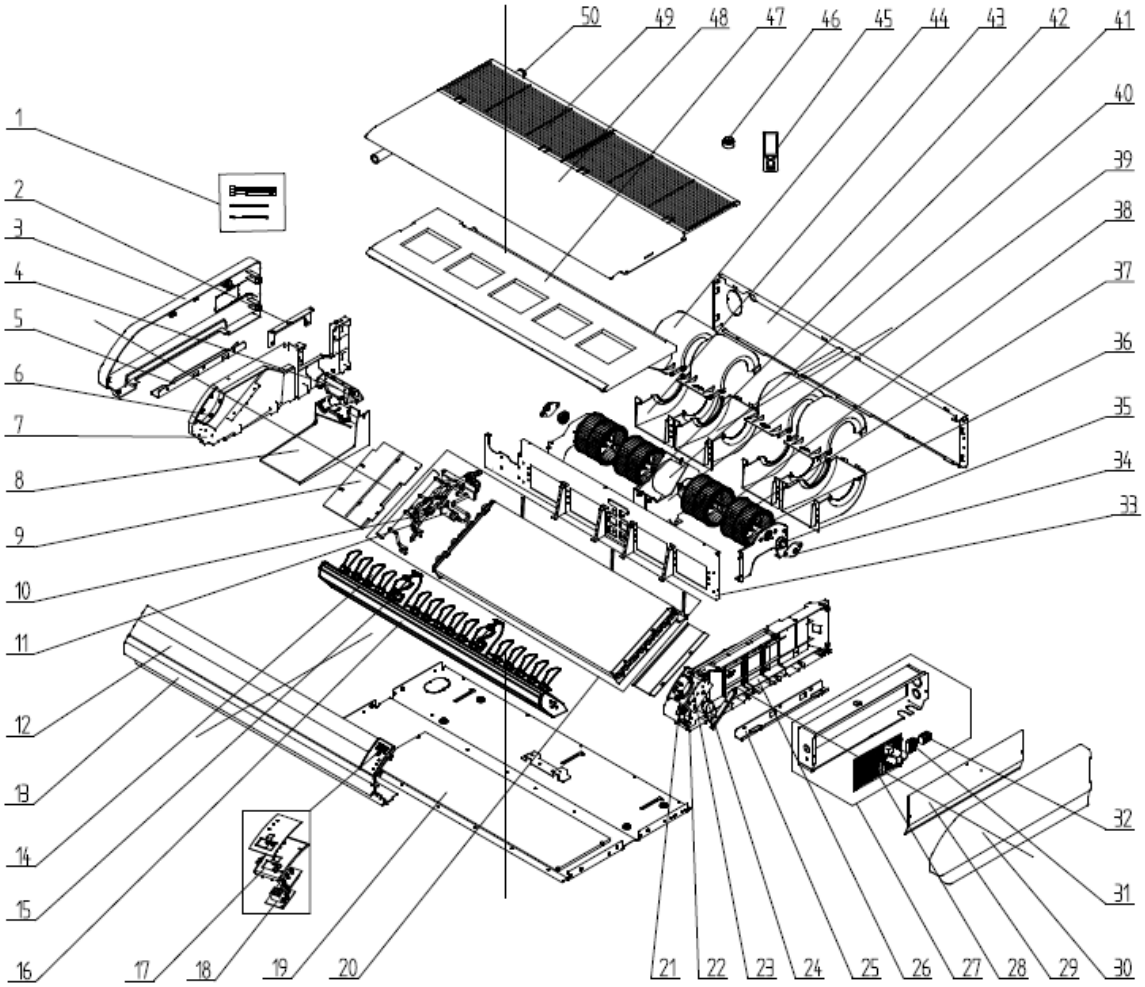

No.	Name of part	For the following unit	
		Unit	Product Code
		GMV-ND28ZD/A-T	CM600N0350
		GMV-ND36ZD/A-T	CM600N0360
		GMV-ND50ZD/A-T	CM600N0320
		Part code	Quantity
1	Sensor Sub-assy	'39008000101G	1
2	Connection Board	'02229406	1
3	Right Cover Plate	'26909444	1
4	Plate Board of Water Releasing Flume	'26909442	1
5	Installation Supporting Frame	'01809402	1
6	Axile Bush	'10542704	2
7	Right Side Plate Sub-Assy	'01319429	1
8	Water Releasing Flume	'02284106P	1
9	Connection Board	'01344115	1
10	Electronic Expansion Valve	' 07334463	1
11	Strainer	'0741410000601	2
12	Guide Louver	'10619403	2

13	Front Connection Board	'01349414P	1
14	Air Louver	'10619404	16
15	Rotating Shaft	'26909430	4
16	Guide Louver Supporter Sub-assy	'0180941601	1
17	Fixed Mount	'26909426R	1
18	Display Board	'30294000009	1
19	Rear Side Plate Assy	'01319400008	1
20	Evaporator Assy	'01024100126(28) '01024100096(36、50)	1
21	Rotating Shaft	'26909413	1
22	Connecting Rod	'26909411	1
23	Rotating Shaft	'26909412	1
24	Stepping Motor	'1521240206	1
25	Installation Supporting Frame	'01809401	1
26	Left Side Plate Sub-Assy	'01319428	1
27	Electric Box Assy	'01394100343	1
28	Main Board	'30226000029	1
29	Electric Box Cover	'01429420	1
30	Left Cover Plate	'26909443	1
31	Terminal Board	'42011106	1
32	Terminal Board	'4201800002601	1
33	Mid-clapboard sub-assy	'01249400004	1
34	Support Of Motor Bearing	'01792408	2
35	O-Gasket of Bearing	'76512404	2
36	Rotary Axis Sub-Assy	'73018000037	2
37	Centrifugal Fan	'10425200	4
38	Joint Slack	'73018731(36、50)	2
39	Supporter	'01809400024	1
40	Fan Motor	'15704100001	1
41	Supporter	'01809400023	1
42	Rear Connection board	'01349422	1
43	Front Volute Casing	'26905205	4
44	Rear Volute Casing	'26905206	4
45	Remote Controller	'30510589	1
46	Electric expand valve fitting	'4304413203	1
47	Water Tray Assy	'01289404	1
48	Top Cover Board Sub-assy	'01269409	1
49	Front Grill sub-assy	'01579403	2
50	Drainage Pipe Sub-assy	'05235434	1

Above data is subject to change without notice,pls reference the SP in global service website.

Exploded View of GMV-ND63ZD/A-T、GMV-ND71ZD/A-T、GMV-ND90ZD/A-T：

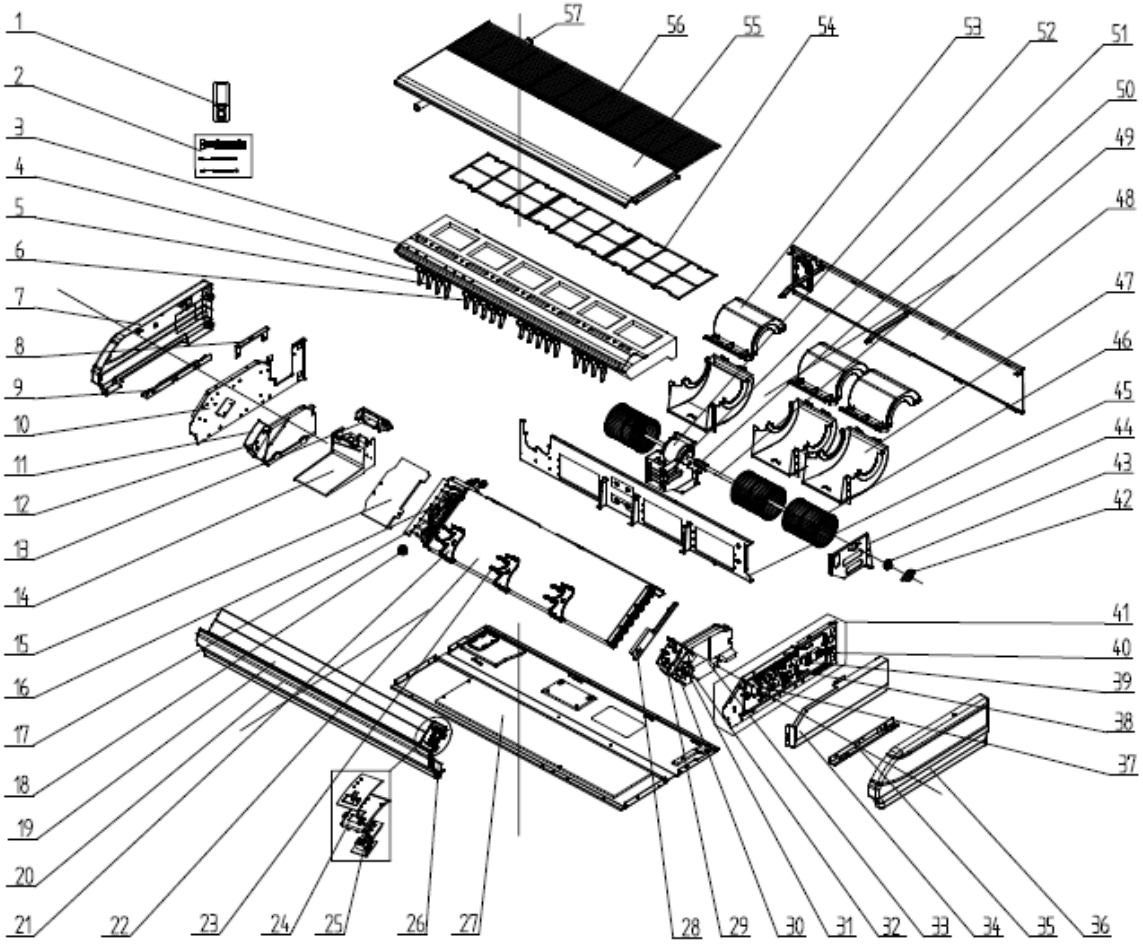

No.	Name of part	For the following unit	
		Unit	Product Code
		GMV-ND63ZD/A-T	CM600N0410
		GMV-ND71ZD/A-T	CM600N0370
		GMV-ND90ZD/A-T	CM600N0330
		Part code	Quantity
1	Remote Controller	'30510589	1
2	Sensor Sub-assy	'39008000100G	1
3	Water Tray Assy	'01289405	1
4	Swing Lever	'10582008	2
5	Air Louver	'26909418	18
6	Swing Lever	'10582009	2
7	Right Cover Plate	'26909422	1
8	Connection Board	'02229406	1
9	Installation Supporting Frame	'01809402	1
10	Right Side Plate Sub-Assy	'01319408	1
11	Right Foam Assy	'12509425	1
12	Axile Bush	'10542704	2
13	Plate Board of Water	'26909442	1

No.	Name of part	For the following unit	
		Unit	Product Code
		GMV-ND63ZD/A-T	CM600N0410
		GMV-ND71ZD/A-T	CM600N0370
		GMV-ND90ZD/A-T	CM600N0330
		Part code	Quantity
	Releasing Flume		
14	Water Releasing Flume	'26909441	1
15	connected board (evaporator)	'01344108	1
16	Strainer	'0741410000601	2
17	Electronic Expansion Valve	' 07334466	1
18	Electric expand valve fitting	'4304413203	1
19	Guide Louver	'26909432	2
20	Front Connection Board	'01349408P	1
21	Supporter	'26909409	3
22	Evaporator Assy	'01024100104	1
23	Rotating Shaft	'26909430	6
24	Fixed Mount	'26909426R	1
25	Display Board	'30294000009	1
26	Front Connection Board Foam Assy	'12509424	1
27	Rear Side Plate Assy	'01319400005	1
28	Water Releasing Flume	'02289402P	1
29	Rotating Shaft	'26909413	1
30	Connecting Rod	'26909411	1
31	Rotating Shaft	'26909412	1
32	Stepping Motor	'1521240206	1
33	Left Foam Assy	'12509408	1
34	Electric Box Cover	'01429410P	1
35	Installation Supporting Frame	'01809401	1
36	Left Cover Plate	'26909416	1
37	Inductance	'43128000014	1
38	Main Board	'30226000027	1
39	Terminal Board	'42011106	1
40	Terminal Board	'4201800002601	1
41	Electric Box Assy	'01394100344	1
42	Support Of Motor Bearing	'01792408	1
43	O-Gasket of Bearing	'76512404	1
44	Bracket 1	'01809404	1
45	Clapboard Sub-Assy	'01249400002	1

No.	Name of part	For the following unit	
		Unit	Product Code
		GMV-ND63ZD/A-T	CM600N0410
		GMV-ND71ZD/A-T	CM600N0370
		GMV-ND90ZD/A-T	CM600N0330
		Part code	Quantity
46	Centrifugal fan	'1041410101	3
47	Front volute casing	'26905208	3
48	Rear Connection board	'01349418	1
49	Rotary Axis Sub-Assy	'73018052	1
50	Joint Slack	'73018731	1
51	Motor Support Sub-Assy	'01809400029	1
52	Brushless DC Motor	'15705200005	1
53	Rear volute casing	'26909419	3
54	Filter	'11126002	1
55	Top Cover Board Sub-assy	'01269405	1
56	Front Grill sub-assy	'01579402	3
57	Drainage Pipe Sub-assy	'05235434	1

Above data is subject to change without notice,pls reference the SP in global service website.

Exploded View of GMV-ND112ZD/A-T、GMV-ND125ZD/A-T、GMV-ND140ZD/A-T：

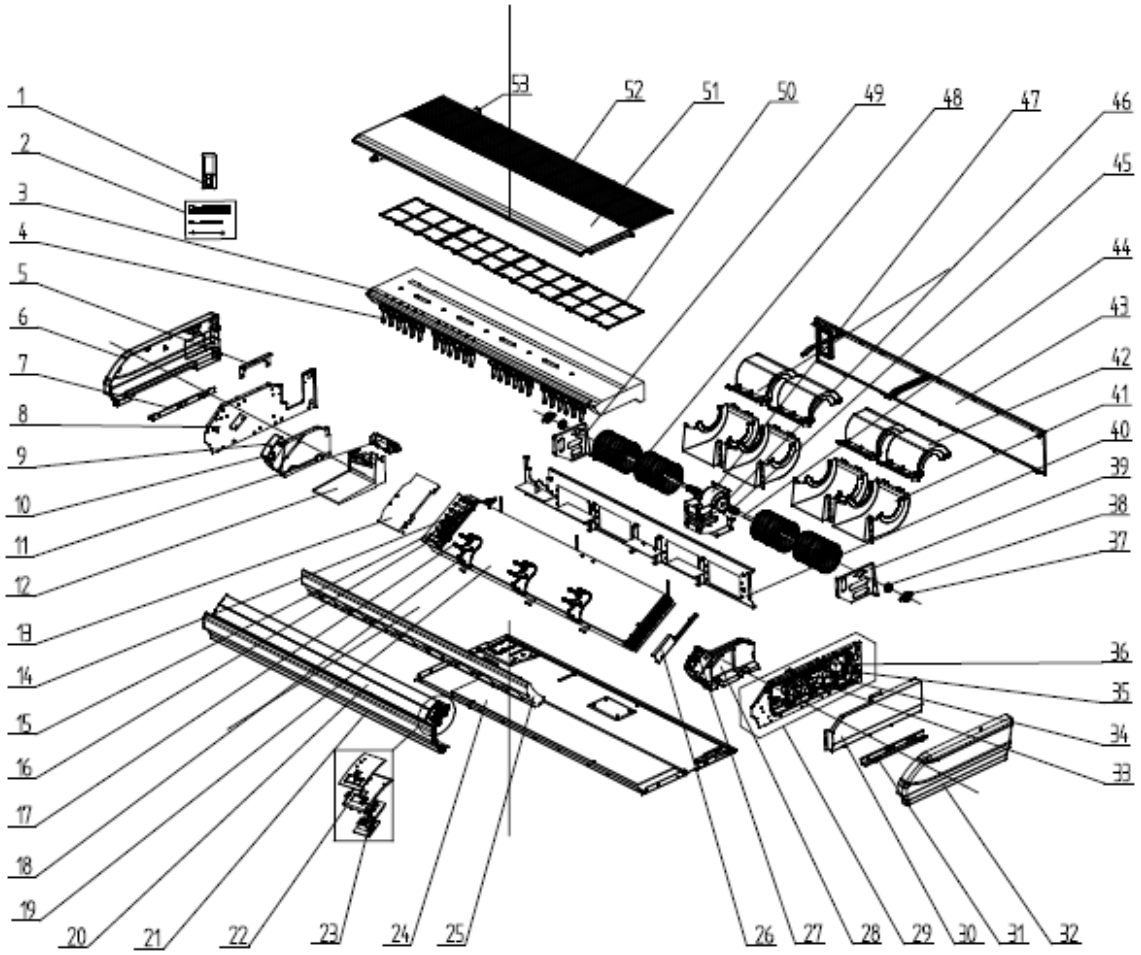

No.	Name of part	For the following unit	
		Unit	Product Code
		GMV-ND112ZD/A-T	CM600N0380
		GMV-ND125ZD/A-T	CM600N0390
		GMV-ND140ZD/A-T	CM600N0340
		Part code	Quantity
1	Remote Controller	'30510589	1
2	Sensor Sub-assy	'39008000100G	1
3	Water Tray Assy	'01289401	1
4	Air Louver	'26909418	24
5	Connection Board	'02229406	1
6	Right Cover Plate	'26909422	1
7	Installation Supporting Frame	'01809402	1
8	Right Side Plate Sub-Assy	'01319408	1
9	Right Foam Assy	'12509425	1
10	Axile Bush	'10542704	2
11	Plate Board of Water Releasing Flume	'26909442	1
12	Water Releasing Flume	'26909441	1
13	connected board (evaporator)	'01344108	1
14	Strainer	'0741410000601	2
15	Electronic Expansion Valve	'07334468	1
16	Electric expand valve fitting	'4304413203	1
17	Rotating Shaft	'26909430	6
18	Supporter	'26909409	3
19	Evaporator Assy	'01024100105	1
20	Guide Louver	'10619405	2
21	Front Connection Board	'01349404P	1
22	Fixed Mount	'26909426R	1
23	Display Board	'30294000009	1
24	Rear Side Plate Sub-Assy	'01319442	1
25	Front Connection Board Foam Assy	'12509434	1
26	Water Releasing Flume	'02289402P	1
27	Stepping Motor	'1521240206	2
28	Left Foam Assy	'12509437	1
29	Electric Box Assy	'01394100344	1
30	Electric Box Cover	'01429410P	1
31	Installation Supporting Frame	'01809421	1

No.	Name of part	For the following unit	
		Unit	Product Code
		GMV-ND112ZD/A-T	CM600N0380
		GMV-ND125ZD/A-T	CM600N0390
		GMV-ND140ZD/A-T	CM600N0340
		Part code	Quantity
32	Left Cover Plate	'26909416	1
33	Main Board	'30226000027	1
34	Terminal Board	'42011106	1
35	Terminal Board	'4201800002601	1
36	Inductance	'43128000014	1
37	Support Of Motor Bearing	'01792408	2
38	O-Gasket of Bearing	'76512404	2
39	Bracket 1	'01809404	1
40	Clapboard Sub-Assy	'01249400006	1
41	Front volute casing	'26905208	4
42	Rear volute casing	'26909419	4
43	Rear Connection board	'01349419	1
44	Rotary Axis Sub-Assy	'73018052	2
45	Joint Slack	'73018731	2
46	Motor Support Sub-Assy	'0180940002901	1
47	Brushless DC Motor	'15709400005	1
48	Centrifugal fan	'1041410101	4
49	Supporter	'01809403	1
50	Filter	'11126002	1
51	Top Cover Board Sub-assy	'01269400002	1
52	Front Grill sub-assy	'01579401	4
53	Drainage Pipe Sub-assy	'05235434	1

Above data is subject to change without notice,pls reference the SP in global service website.

5.9 Fresh air Processing Unit

Exploded View of GMV-NX140P/A(X1.2)-K：

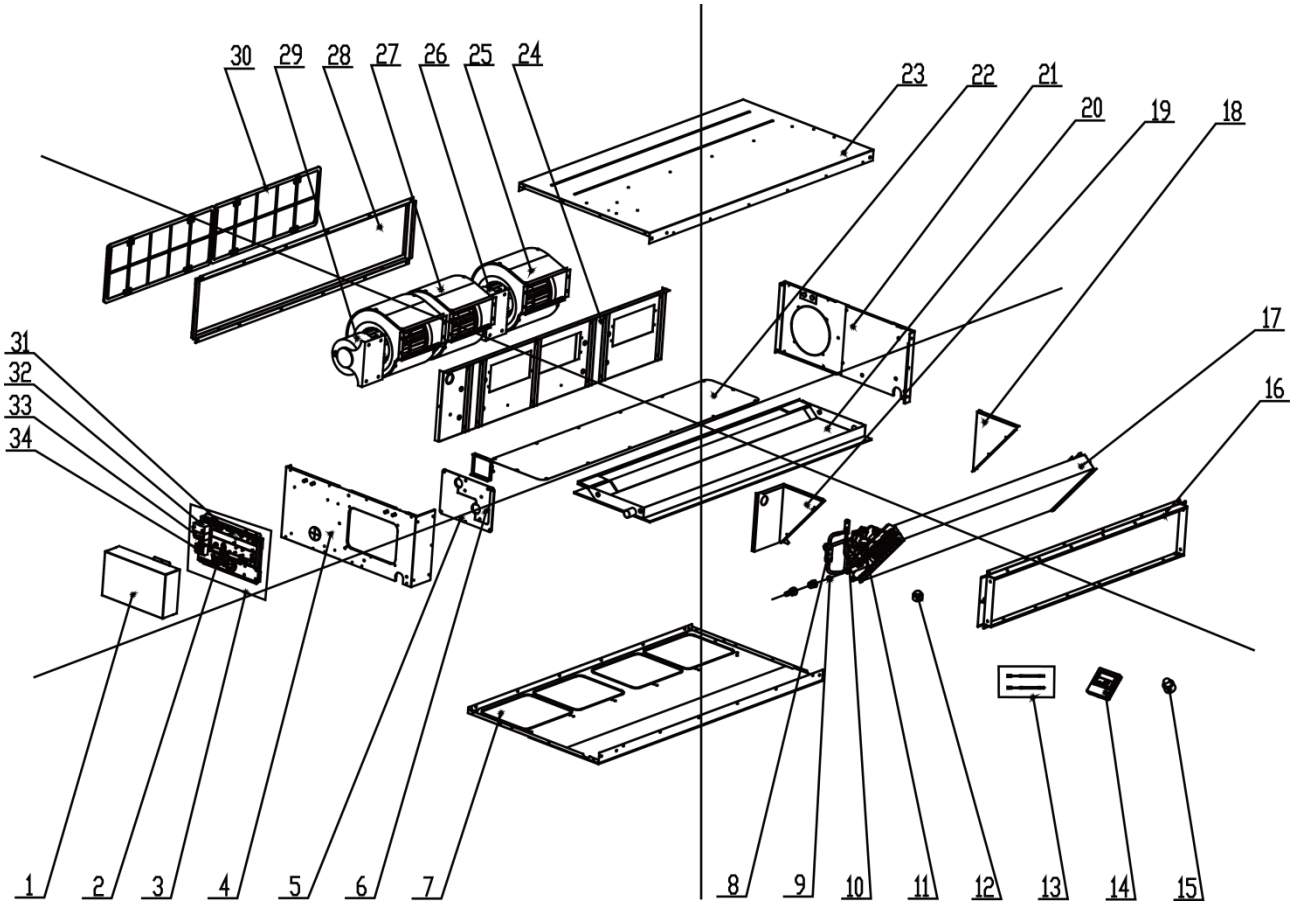

NO.	Model	GMV-NX140P/A(X1.2)-K	Qty.
	Product Code	CM800N3610	
	Part Name	Part Code	
1	Electric Box Cover	01424100071	1
2	Terminal Board	42011106	1
3	Electric Box Assy	01394100199	1
4	Left Side Plate Assy	01314100058	1
5	Seal Of Left Side Plate Sub-Assy	01495212	1
6	Seal Of Connection Pipe	01495213	1
7	Bottom Cover Plate Assy	0125860301	1
8	Strainer	0741410000601	1
9	Filter Sub-Assy	07210028	1
10	Electronic Expansion Valve	07334412	1
11	Filter	07415210	1
12	Electric Expand Valve Fitting	4304413219	1
13	Sensor sub-assy	39004167G	1
14	Display Board	30296106	1
15	Choke Plug of Water Pipe	76712454	1
16	Border Plate of Air Outlet Sub-Assy	01374100036	1
17	Evaporator Assy	01024100061	1
18	Evaporator	01805221	1
19	Left Evaporator Support	01804100006	1
20	Water Tray Assy	01285229	1
21	Right Side Plate Assy	01308679	1
22	Cover Of Air-In	01258602	1
23	Top Cover Board Assy	01264625	1

24	Fan Motor Mounting Plate Sub-Assy	01325293	1
25	Blower	15018603	2
26	Fan Motor	1570520901	1
27	Blower	15018604	1
28	Air intake side-board Sub-assy	01375221	1
29	Fan Motor	1570521001	1
30	Filter Sub-Assy	11725205	2
31	Main Board	30226000052	1
32	Capacitor CBB61	33010056	1
33	Capacitor CBB61	33010064	1
34	Terminal Board	4201800002601	1

Above data is subject to change without notice,pls reference the SP in global service website.

Exploded View of GMV-NX224P/A(X2.0)-M：

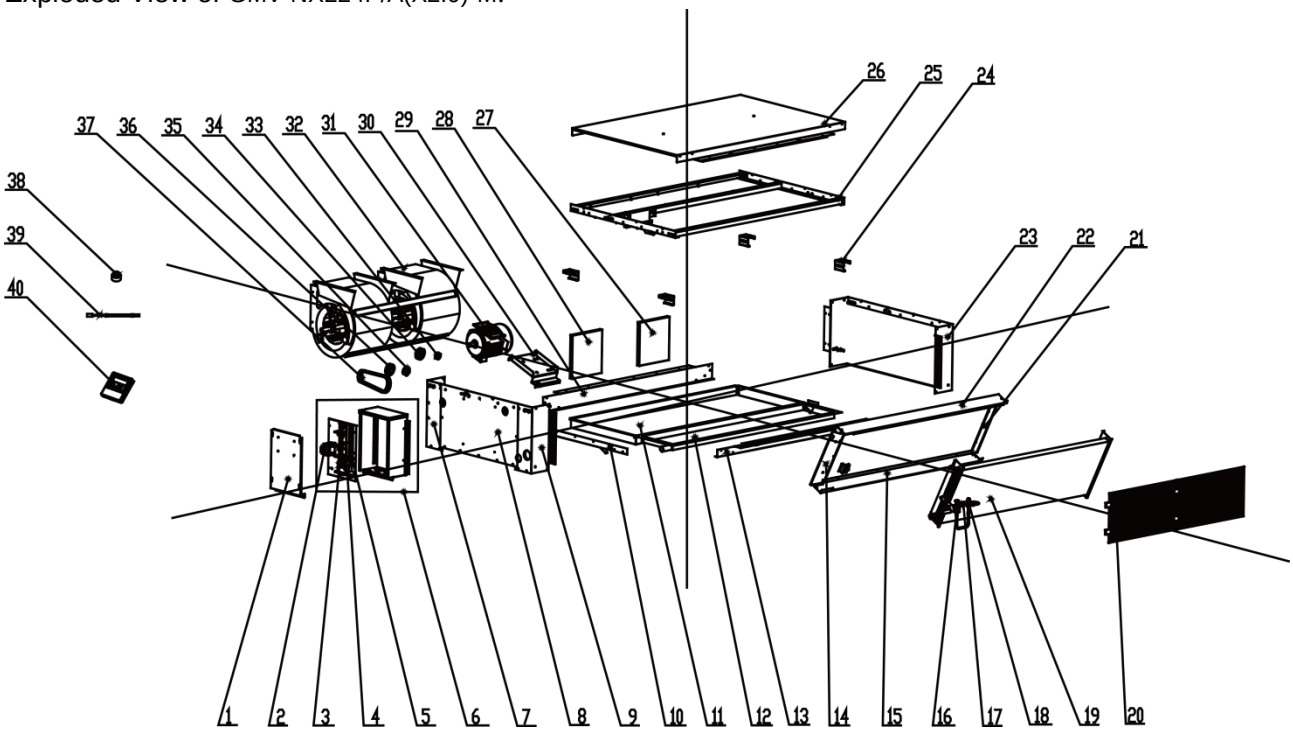

NO.	Model	GMV-NX224P/A(X2.0)-M	Qty.
	Product Code	**CM800N3620**	
	Part Name	**Part Code**	
1	Electric Box Cover	01419141	1
2	AC Contactor	44010232	1
3	Terminal Board	420100071	1
4	Terminal Board	4201800002601	1
5	Main Board	30226000052	1
6	Electric Box Assy	01394100202	1
7	Right Side Plate Sub-Assy	01309105	1
8	Access panel sub-assy	01544126	1
9	Right Side Plate Sub-Assy	01314209	1
10	Side beam assy	01874178	1
11	Chassis Sub-assy	01194136	1
12	Water Collecting Tray Assy	01284142	1
13	Front Frame sub- assy	01874184	1
14	Air Guard	01354112	1
15	Base plate (evaporator)	01079114	1

NO.	Model	GMV-NX224P/A(X2.0)-M	Qty.
	Product Code	CM800N3620	
	Part Name	Part Code	
16	Filter	07415210	1
17	Strainer	0741410000601	1
18	Electronic Expansion Valve	07334390	1
19	Evaporator Assy	1024100064	1
20	Filter Sub-Assy	11129070	2
21	Air Guard	01354111	1
22	Cover Plate Sub-Assy of Evaporator	01094109	1
23	Left Side Plate Assy	01314208	1
24	Hook	02205302	4
25	suspending rack	01729165	1
26	Top Cover Assy	01259106	1
27	place with a draught of Connection board	01389079	1
28	place with a draught of Connection board	01389077	1
29	Rear beam sub-assy	01779108	1
30	Motor Retaining Plate Sub-Assy	01845309	1
31	Fan Motor	15018304	1
32	Motor	15009059	1
33	Taper Sleeve	10548211	1
34	Belt Wheel	10548157	1
35	Taper Sleeve	10548218	1
36	Belt Wheel	10548150	1
37	Belt	76318317	2
38	Electric Expand Valve Fitting	4304413219	1
39	Sensor sub-assy	39004165G	1
40	Display Board	30296106	1

Above data is subject to change without notice,pls reference the SP in global service website.

Exploded View of GMV-NX280P/A(X2.5)-M、GMV-NX280P/A(X3.0)-M：

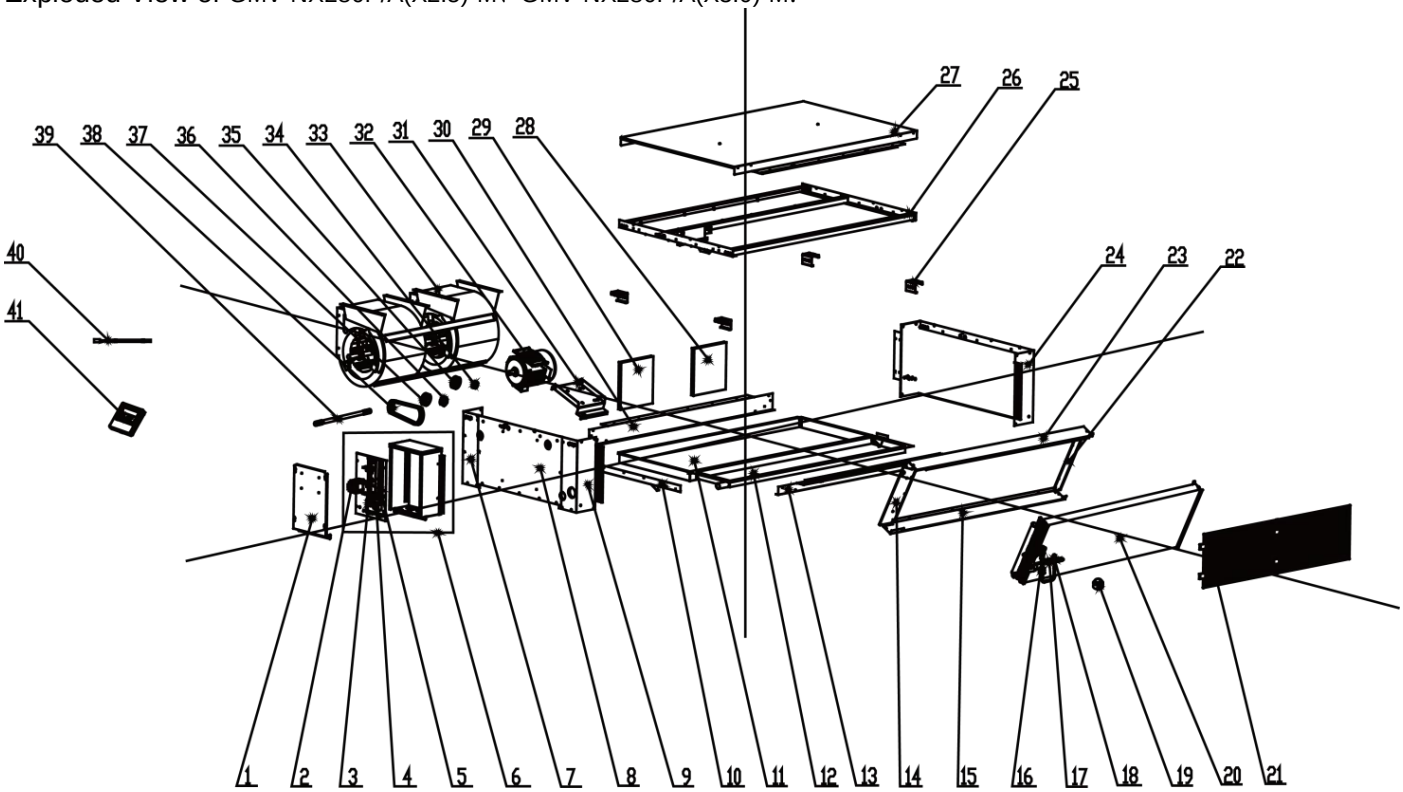

NO.	Model	GMV-NX280P/A(X2.5)-M	GMV-NX280P/A(X3.0)-M	Qty.
	Product Code	CM800N3630	CM800N3630	
	Part Name	Part Code	Part Code	
1	Electric Box Cover	014191411	014191411	1
2	AC Contactor	44010232	44010232	1
3	Terminal Board	420100071	420100071	1
4	Terminal Board	4201800002601	4201800002601	1
5	Main Board	30226000052	30226000052	1
6	Electric Box Assy	01394100202	01394100202	1
7	Right Side Plate Sub-Assy	01309105	01309105	1
8	Access panel sub-assy	01544126	01544126	1
9	Right Side Plate Sub-Assy	01314209	01314209	1
10	Side beam assy	01874178	01874178	1
11	Chassis Sub-assy	01194136	01194136	1
12	Water Collecting Tray Assy	01284142	01284142	1
13	Front Frame sub- assy	01874184	01874184	1
14	Air Guard	01354112	01354112	1
15	Base plate (evaporator)	01079114	01079114	1
16	Filter	07415210	07415210	1
17	Strainer	0741410000601	0741410000601	1
18	Electronic Expansion Valve	07334390	07334390	1
19	Electric Expand Valve Fitting	4304413219	4304413219	1
20	Evaporator Assy	1024100092	1024100092	1
21	Filter Sub-Assy	11129070	11129070	2
22	Air Guard	01354111	01354111	1
23	Cover Plate Sub-Assy of Evaporator	01094109	01094109	1
24	Left Side Plate Assy	01314208	01314208	1
25	Hook	02205302	02205302	4
26	suspending rack	01729165	01729165	1
27	Top Cover Assy	01259106	01259106	1
28	place with a draught of Connection board	01389079	01389079	1
29	place with a draught of Connection board	01389077	01389077	1
30	Rear beam sub-assy	01779108	01779108	1
31	Motor Retaining Plate Sub-Assy	01845309	01845309	1
32	Fan Motor	15018304	15018304	1
33	Motor	15009059	15009059	1
34	Taper Sleeve	10548211	10548211	1
35	Belt Wheel	10548156	10548157	1
36	Taper Sleeve	10548218	10548218	1
37	Belt Wheel	10548149	10548150	1
38	Belt	76318340	76318317	2
39	Rotating Shaft	10549057	10549057	1
40	Sensor sub-assy	39004165G	39004165G	1
41	Display Board	30296106	30296106	1

Above data is subject to change without notice,pls reference the SP in global service website.

Exploded View of GMV-NX450P/A(X4.0)-M:

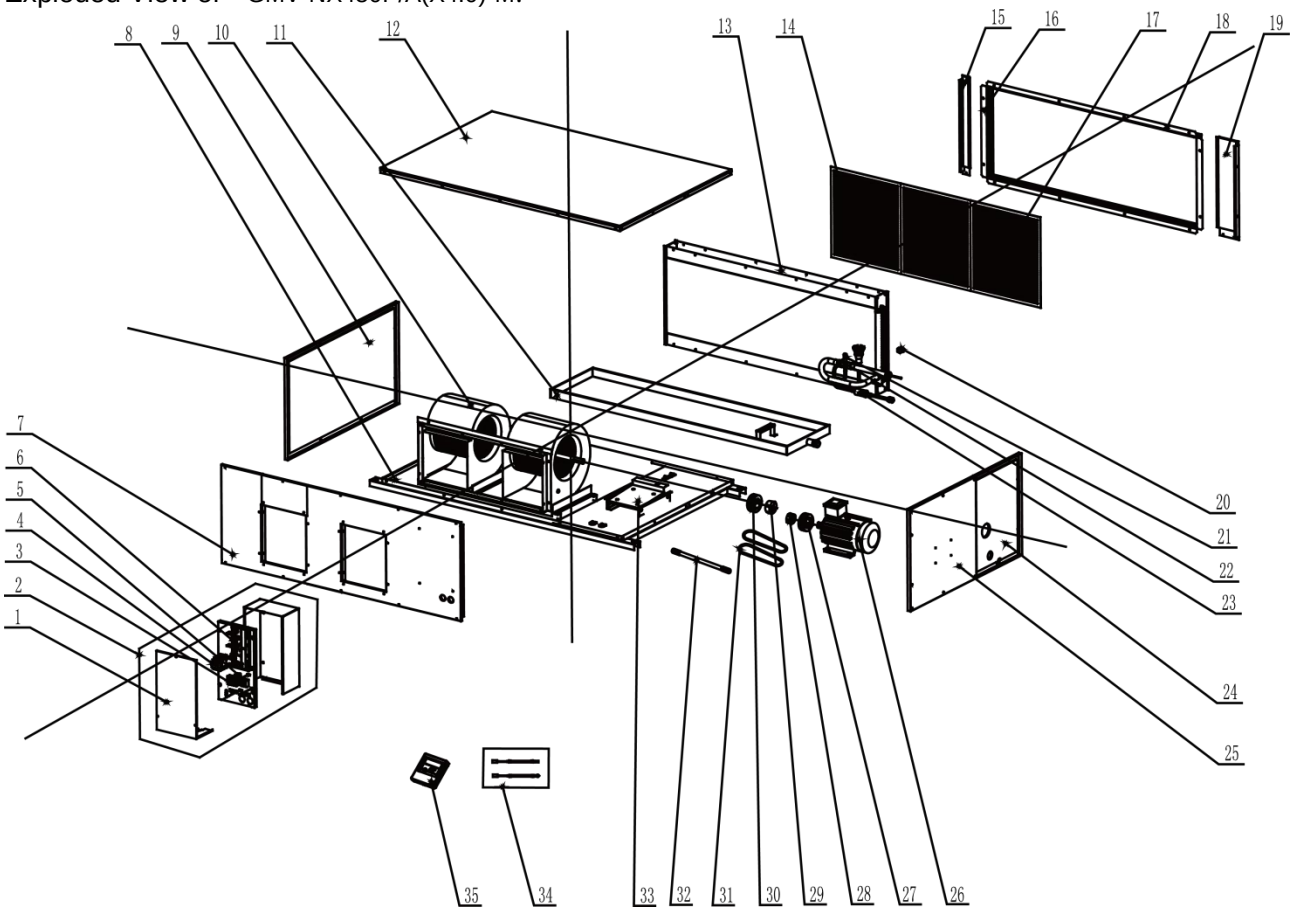

NO.	Model	GMV-NX450P/A(X4.0)-M	Qty.
	Product Code	CM800N3740	
	Part Name	Part Code	
1	Electric Box Cover	01425304P	1
2	Electric Box Assy	01394100243	1
3	Terminal Board	42011043	1
4	AC Contactor	44010232	1
5	Terminal Board	4201800002601	1
6	Main Board	30226000052	1
7	Air Outlet Panel sub-assy	01545213	1
8	Base Frame Assy	01285225	1
9	Side panel sub-assy	01545212	1
10	Motor	15705214	1
11	Water Collecting Tray Assy	01284169	1
12	Top Cover Sub-Assy	01265209	1
13	Evaporator Assy	01024100062	1
14	Filter Sub-Assy	11129079	1
15	Retaining Plate Sub-Assy	01845207	1
16	Longitudinal Beam of return air frame	01875208P	2
17	Filter Sub-Assy	11129078	2
18	Return Air Frame Sub-Assy	01375208P	2
19	Retaining Plate Sub-Assy	01845205	1
20	Electric Expand Valve Fitting	4304413219	1
21	Electronic Expansion Valve	07334390	1
22	Filter	07218603	1

NO.	Model	GMV-NX450P/A(X4.0)-M	Qty.
	Product Code	CM800N3740	
	Part Name	Part Code	
23	Gas Tube Filter	072190511	1
24	Side panel sub-assy	01545208	1
25	Side panel sub-assy	01545210	1
26	Fan Motor	1501861102	1
27	Belt Wheel	10548149	1
28	Taper Sleeve	10548213	1
29	Taper Sleeve	10548218	1
30	Belt Wheel	10548156	1
31	Belt	76318309	2
32	Rotating Shaft	10549057	1
33	Retaining Plate	01845319	1
34	Temperature Sensor	39008042G	1
35	Display Board	30296106	1

Above data is subject to change without notice,pls reference the SP in global service website.

Exploded View of GMV-NDX224P/A-T、GMV-NDX280P/A-T：

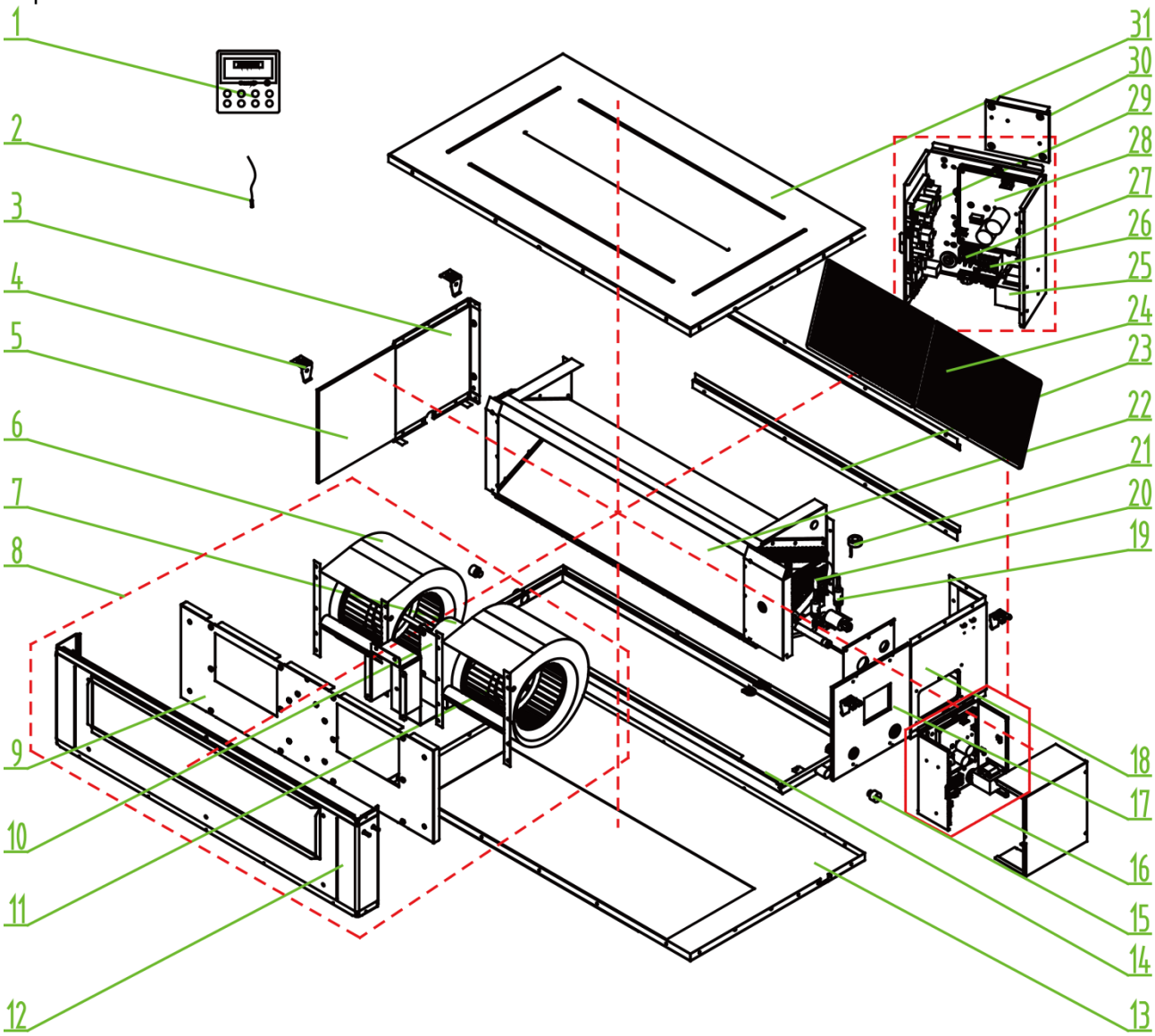

NO.	Model	GMV-NDX224P/A-T	GMV-NDX280P/A-T	Qty.
	Product Code	CM810N0260	CM810N0270	
	Part Name	Part Code	Part Code	
1	Display Board	30296000040	30296000040	1
2	Sensor Sub-Assy	39004165G	39004165G	1
3	Left Side Plate Assy 2	01315367	01315367	1
4	Hook	02112466	02112466	4
5	Left Side Plate Sub-Assy 1	01315376	01315376	1
6	Centrifugal Fan (Left)	1570530601	1570530601	1
7	Brushless DC Motor	15704100009	15704100009	1
8	Centrifugal Fan Assy	15404100075	15404100075	1
9	Blower Mounting Plate Sub-Assy	01324100064	01324100064	1
10	Motor Support	01805200228	01805200228	1
11	Blower(Right)	15705307	15705307	1
12	Front Side Plate Assy	01314627	01314627	1
13	Bottom Cover Plate Assy	01265357	01265357	1
14	Water Tray Assy	01284620	01284620	1
15	Choke Plug of Water Pipe	76712454	76712454	2
16	Electric Box Assy	01394100573	01394100573	1
17	Ritht Side Plate Sub-Assy 1	01314100086	01314100086	1
18	Right Side Plate Assy	01314321	01314321	1
19	Strainer	0741410000601	0741410000601	2
20	Electronic Expansion Valve	07331139	07331139	1
21	Electric Expand Valve Fitting	4304413205	4304413205	1
22	Evaporator Assy	01024100120	01024100120	1
23	Filter Guide Groove	02284107	02284107	2
24	Filter Sub-Assy	11725211	11725211	2
25	Reactor	43130189	43130189	1
26	Terminal Board	4201800002601	4201800002601	1
27	Terminal Board	42010259	42010259	1
28	Main Board	30221000023	30221000023	1
29	Main Board	30226000090	30226000090	1
30	Radiator	49018000068	49018000068	1
31	Top Cover Board Assy	01265359	01265359	1

Above data is subject to change without notice,pls reference the SP in global service website.

5.10 Slim Duct Type

Exploded View of GMV-ND22PL/B-T、GMV-ND25PL/B-T、GMV-ND28PL/B-T、GMV-ND32PL/B-T GMV-ND36PL/B-T：

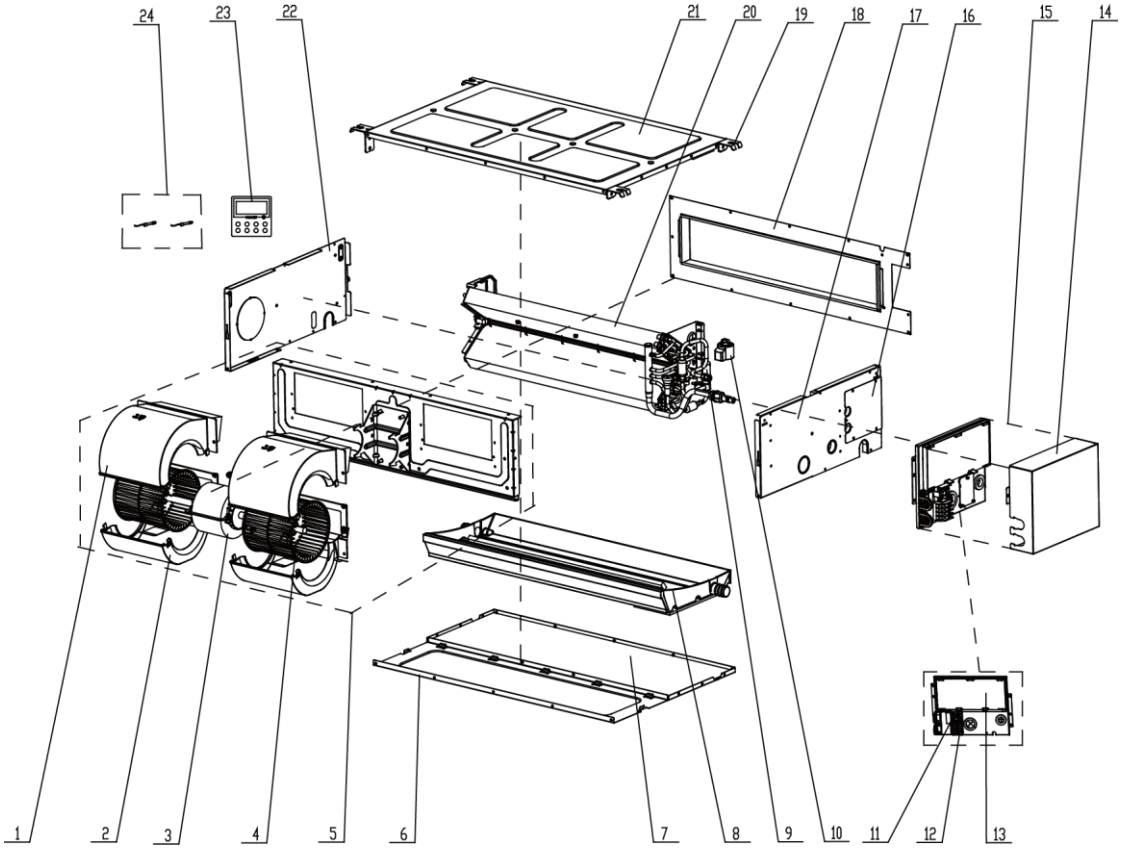

No.	Name of part	For the following unit	
		Unit	Product Code
		GMV-ND22PL/B-T	CM800N3560
		GMV-ND25PL/B-T	CM810N0010
		GMV-ND28PL/B-T	CM810N0020
		GMV-ND32PL/B-T	CM800N3570
		GMV-ND36PL/B-T	CM810N0030
		Part code	Quantity
1	Propeller Housing(Upper)	` 26905200018	2
2	Propeller Housing(Lower)	` 26905200019	2
3	Fan Motor	` 15704100001	1
4	Centrifugal Fan	` 10425200003	2
5	Centrifugal fan assy	` 15404100031	1
6	Cover Plate	` 01265200057	1
7	Bottom Cover Plate Assy	` 01265200065	1
8	Water Tray Assy	` 01285200020	1
9	Electronic Expansion Valve	` 07334463	1
10	Electric Expand Valve Fitting	` 4304413215	1
11	Terminal Board	` 42011106	1

12	Terminal Board	' 4201800002601	1
13	Main Board	` 30226000029	1
14	Electric Box Cover	` 01425200023	1
15	Electric Box Assy	` 01394100160	1
16	Closing Plate Sub-Assy	` 01494100010	1
17	Left Side Plate Assy	` 01314100076	1
18	Air Outlet Frame Assy	` 01374100057	1
19	Hook	` 02112446	2
20	Hook	` 01344100034	2
21	Evaporator Assy	` 01024100039	1
22	Top Cover Board Assy	` 01265200066	1
23	Right Side Plate Assy	` 01315200053	1
24	Display Board	` 01315200053	1
25	Sensor Sub-assy	` 39004168G	1

Above data is subject to change without notice,pls reference the SP in global service website.

Exploded View of GMV-ND40PL/B-T、GMV-ND45PL/B-T、GMV-ND50PL/B-T、GMV-ND56PL/B-T、GMV-ND63PL/B-T：

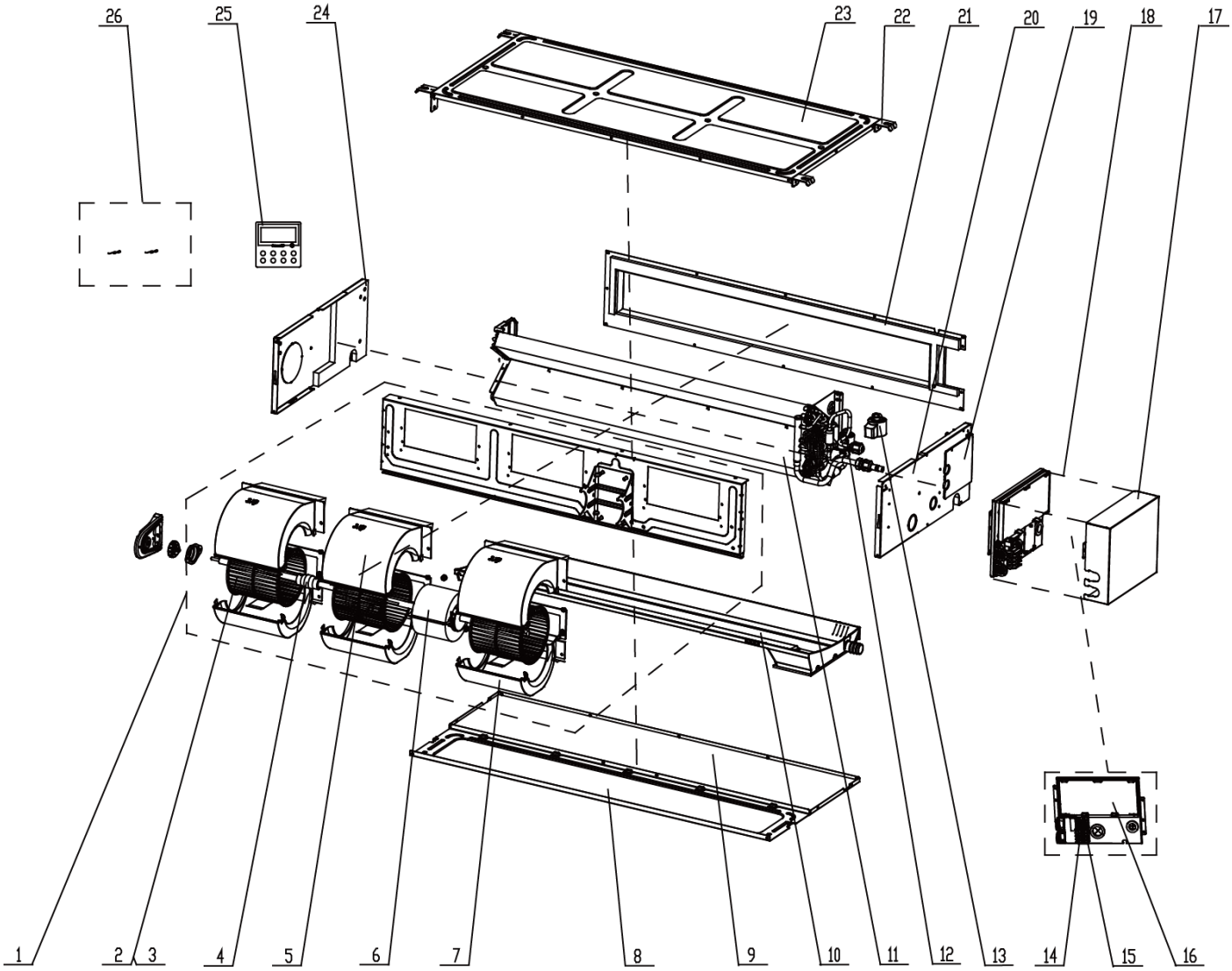

No.	Name of part	For the following unit	
		Unit	Product Code
		GMV-ND40PL/B-T	CM800N3580
		GMV-ND45PL/B-T	CM810N0040
		GMV-ND50PL/B-T	CM810N0050
		GMV-ND56PL/B-T	CM800N3590
		GMV-ND63PL/B-T	CM810N0060
		Part code	Quantity
1	Centrifugal fan assy	` 15404100032	1
2	Centrifugal Fan	` 10425200003	3
3	Fan Bearing	` 76512210	1
4	Joint Slack	` 73018731	1
5	Propeller Housing(Upper)	` 26905200018	3
6	Fan Motor	` 15704100001	1
7	Propeller Housing(Lower)	` 26905200019	3
8	Cover Of Air-in	` 01265200073	1
9	Bottom Cover Plate Assy	` 01265200071	1
10	Water Tray Assy	` 01285200022	1
11	Evaporator Assy	` 01024100042	1
12	Electronic Expansion Valve	` 07334466	1
13	Terminal Board	` 42011106	1
14	Terminal Board	' 4201800002601	1
15	Main Board	` 30226000029	1
16	Magnetic Ring	` 49010104	1
17	Electric Box Cover	` 01425200023	1
18	Electric Box Assy	` 01394100241	1
19	Closing Plate Sub-Assy	` 01494100010	1
20	Left Side Plate Assy	` 01314100076	1
21	Air Outlet Frame Assy	` 01374100058	1
22	Hook	` 02112446	2
23	Hook	` 01344100034	2
24	Top Cover Board Assy	` 01265200068	1
25	Right Side Plate Assy	` 01315200053	1
26	Display Board	` 30296000040	1
27	Sensor Sub-assy	` 39004168G	1

Above data is subject to change without notice,pls reference the SP in global service website.

Exploded View of GMV-ND72PL/B-T：

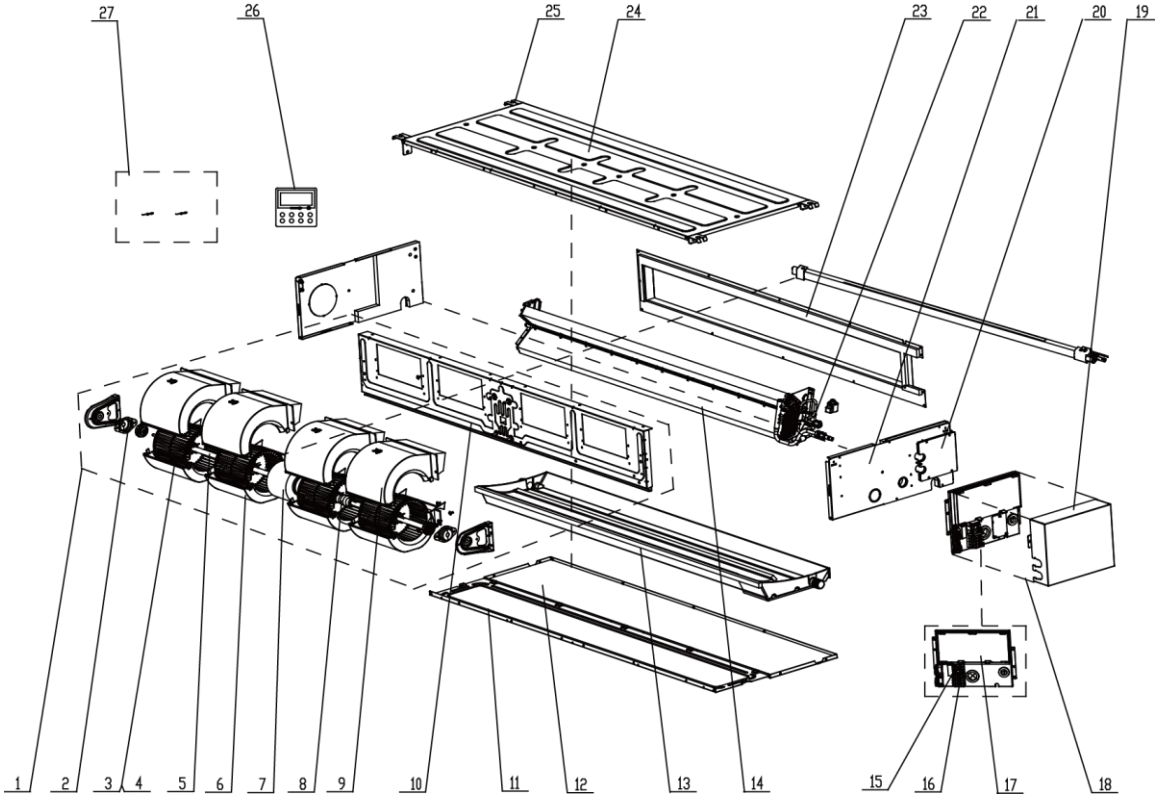

No.	Name of part	For the following unit	
		Unit	Product Code
		GMV-ND72PL/B-T	CM800N3600
		Part code	Quantity
1	Centrifugal fan assy	` 15404100032	1
2	Bearing Holder Sub-assy	` 26151139	2
3	Centrifugal Fan	` 10425200003	4
4	Fan Bearing	` 76512210	1
5	Rotary Axis Sub-Assy	` 73018761	2
6	Propeller Housing(Lower)	` 26905200019	4
7	DC brushless motor	` 15704100001	1
8	Joint Slack	` 73018731	2
9	Propeller Housing(Upper)	` 26905200018	4
10	Blower Mounting Plate Sub-Assy	` 01325200053	1
11	Cover Of Air-in	` 01265200085	1
12	Bottom Cover Plate Assy	` 01265200093	1
13	Water Tray Assy	` 01285200029	1
14	Evaporator Assy	` 01024100076	1
15	Terminal Board	` 42011106	1
16	Terminal Board	' 4201800002601	1
17	Main Board	` 30226000029	1
18	Electric Box Assy	` 01394100241	1

19	Electric Box Cover	` 01425200023	1
20	Closing Plate Sub-Assy	` 01494100010	1
21	Right Side Plate Assy	` 01315200053	1
22	Electronic Expansion Valve	` 07334466	1
23	Air Outlet Frame Assy	` 01374100059	1
24	Top Cover Board Assy	` 0126520009201	1
25	Hook	` 02112446	2
26	Hook	` 01344100034	2
27	Display Board	` 30296000040	1
28	Sensor Sub-assy	` 39004168G	1

Above data is subject to change without notice,pls reference the SP in global service website.

5.11 Air Handler type Indoor Unit

Exploded View of GMV-NR71A/A-D、GMV-NR90A/A-D、GMV-NR100A/A-D、GMV-NR112A/A-D、GMV-NR140A/A-D：

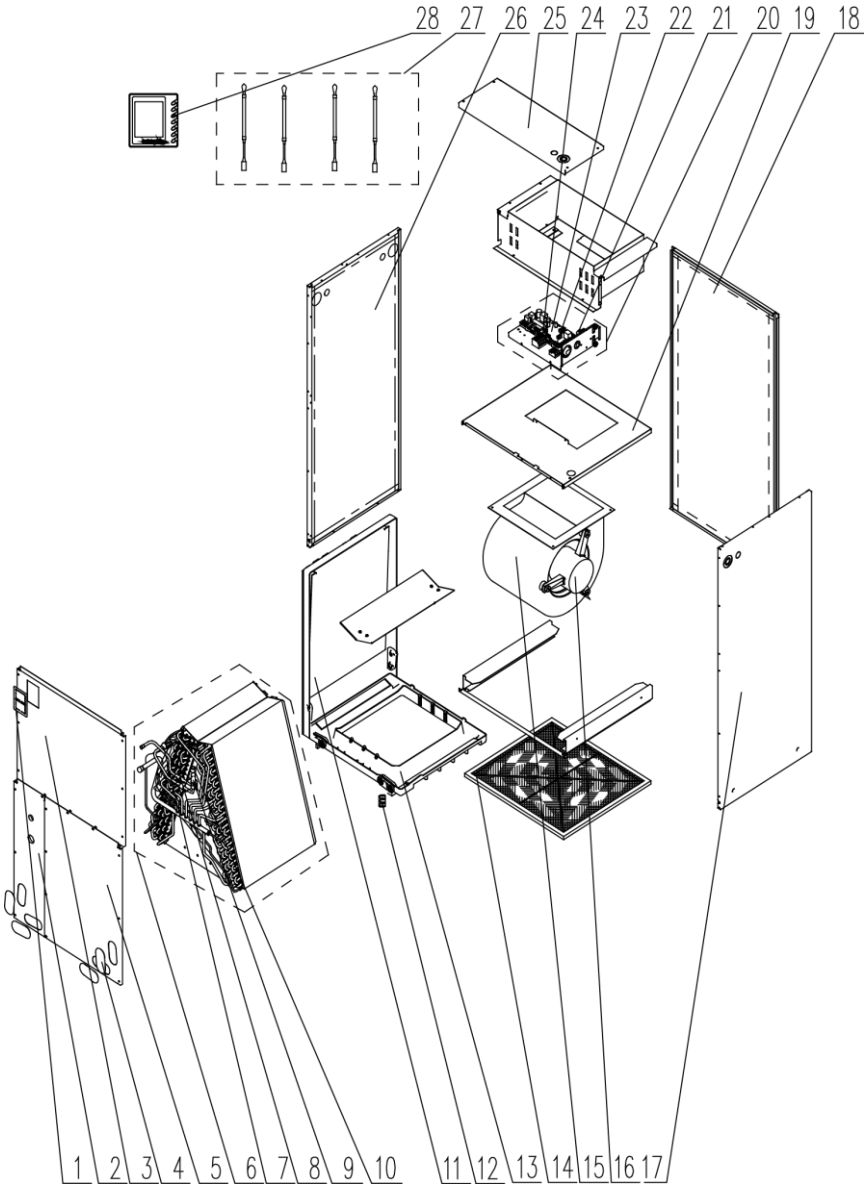

GMV-NR140A/A-D

NO.	Model	GMV-NX224P/A(X2.0)-M	Qty.
	Product Code	CM800N3620	
	Part Name	Part Code	
1	insulating board	'75142201	1
2	Lower cover plate 1	01264100065	1
3	Top Cover Board Sub-assy	'01262200024	1
4	Plastic Cover	'26902209	4
5	Lower cover plate sub-assy 2	'01262200026	1
6	Evaporator Assy	'01024100159	1
7	Current Divider	'0722443501	1
8	Strainer	'0721200101	2
9	Electronic Expansion Valve	'07334468	1
10	Electric Expand Valve Fitting	'4304413205	1
11	Secondary Water Tray	'26902207	1
12	Choke Plug	76718209	8
13	Main water Tray	'26902206	1
14	Filter Sub-Assy	'11722202	1
15	Motor for Centrifugal Fan	'1570220201	1
16	Fan Motor	'15702237	1
17	Right Side Plate Sub-Assy	'01312200026	1
18	Rear Side Plate Sub-Assy	'01312200028	1
19	Blower Mounting Plate	'01322200010	1
20	Electric cabinet board	'01394100522	1
21	Capacitor CBB65	'3300008111	1
22	Terminal Board	'4201115404	1
23	Main Board	'30226000004	1
24	Terminal Board	'4201800002601	1
25	Top Cover Plate Sub-Assy	'01262200028	1
26	Left Side Plate Sub-Assy	'01312200030	1
27	Sensor Sub-assy	'39008000103G	1
28	Display Board	'30296000040	1

GMV-NR71A/A-D、

NO.	Model	GMV-NX224P/A(X2.0)-M	Qty.
	Product Code	CM800N3620	
	Part Name	Part Code	
1	insulating board	' 75142201	1
2	Lower cover plate 1	` 01264100070	1
3	Top Cover Board Sub-assy	` 01262200007	1
4	Plastic Cover	` 26902209	4
5	Lower cover plate sub-assy 2	` 01262200009	1
6	Evaporator Assy	` 01024100162	1
7	Current Divider	` 072241303	1
8	Strainer	` 0721200101	2
9	Electronic Expansion Valve	` 07334466	1
10	Electric Expand Valve Fitting	` 4304413205	1
11	Secondary Water Tray	` 26902200002	1
12	Choke Plug	` 76718209	8
13	Main water Tray	` 26902200001	1

14	Filter Sub-Assy	` 1172220202	1
15	Motor for Centrifugal Fan	` 1570220101	1
16	Fan Motor	` 1570221401	1
17	Right Side Plate Sub-Assy	` 01312200007	1
18	Rear Side Plate Sub-Assy	` 01312200009	1
19	Blower Mounting Plate	` 01322200008	1
20	Electric cabinet board	` 01394100523	1
21	Capacitor CBB65	` 33000074	1
22	Terminal Board	` 4201115404	1
23	Main Board	` 30226000004	1
24	Terminal Board	` 4201800002601	1
25	Top Cover Plate Sub-Assy	` 01262200010	1
26	Left Side Plate Sub-Assy	` 01312200005	1
27	Sensor Sub-assy	` 39008000103G	1
28	Display Board	` 30296000040	1

GMV-NR90A/A-D

NO.	**Model**	**GMV-NX224P/A(X2.0)-M**	**Qty.**
	Product Code	**CM800N3620**	
	Part Name	**Part Code**	
1	insulating board	` 75142201	1
2	Lower cover plate 1	` 01264100070	1
3	Top Cover Board Sub-assy	` 01262200007	1
4	Plastic Cover	` 26902209	4
5	Lower cover plate sub-assy 2	` 01262200009	1
6	Evaporator Assy	` 01024100163	1
7	Current Divider	` 0722443501	1
8	Strainer	` 0721200101	2
9	Electronic Expansion Valve	` 07334468	1
10	Electric Expand Valve Fitting	` 4304413205	1
11	Secondary Water Tray	` 26902200002	1
12	Choke Plug	` 76718209	8
13	Main water Tray	` 26902200001	1
14	Filter Sub-Assy	` 1172220202	1
15	Motor for Centrifugal Fan	` 1570220101	1
16	Fan Motor	` 1570221403	1
17	Right Side Plate Sub-Assy	` 01312200007	1
18	Rear Side Plate Sub-Assy	` 01312200009	1
19	Blower Mounting Plate	` 01322200008	1
20	Electric cabinet board	` 01394100523	1
21	Capacitor CBB65	` 33000074	1
22	Terminal Board	` 4201115404	1
23	Main Board	` 30226000004	1
24	Terminal Board	` 4201800002601	1
25	Top Cover Plate Sub-Assy	` 01262200010	1
26	Left Side Plate Sub-Assy	` 01312200005	1
27	Sensor Sub-assy	` 39008000103G	1
28	Display Board	` 30296000040	1

GMV-NR100A/A-D、

NO.	Model	GMV-NX224P/A(X2.0)-M	Qty.
	Product Code	CM800N3620	
	Part Name	Part Code	
1	insulating board	` 75142201	1
2	Lower cover plate 1	` 01264100069	1
3	Top Cover Board Sub-assy	` 01262200019	1
4	Plastic Cover	` 26902209	4
5	Lower cover plate sub-assy 2	` 01262200017	1
6	Evaporator Assy	` 01024100166	1
7	Current Divider	` 0722443501	1
8	Strainer	` 0721200101	2
9	Electronic Expansion Valve	` 07334468	1
10	Electric Expand Valve Fitting	` 4304413205	1
11	Secondary Water Tray	` 26902205	1
12	Choke Plug	` 76718209	8
13	Main water Tray	` 26902204	1
14	Filter Sub-Assy	` 1172220201	1
15	Motor for Centrifugal Fan	` 1570220201	1
16	Fan Motor	` 15702245	1
17	Right Side Plate Sub-Assy	` 01312200017	1
18	Rear Side Plate Sub-Assy	` 01312200019	1
19	Blower Mounting Plate	` 01322200006	1
20	Electric cabinet board	` 01394100524	1
21	Capacitor CBB65	` 33000074	1
22	Terminal Board	` 4201115404	1
23	Main Board	` 30226000004	1
24	Terminal Board	' 4201800002601	1
25	Top Cover Plate Sub-Assy	` 01262200013	1
26	Left Side Plate Sub-Assy	` 01312200015	1
27	Sensor Sub-assy	` 39008000103G	1
28	Display Board	` 30296000040	1

GMV-NR112A/A-D、

NO.	Model	GMV-NX224P/A(X2.0)-M	Qty.
	Product Code	CM800N3620	
	Part Name	Part Code	
1	insulating board	` 75142201	1
2	Lower cover plate 1	` 01264100069	1
3	Top Cover Board Sub-assy	` 01262200019	1
4	Plastic Cover	` 26902209	4
5	Lower cover plate sub-assy 2	` 01262200017	1
6	Evaporator Assy	` 01024100158	1
7	Current Divider	` 0722443501	1
8	Strainer	` 0721200101	2
9	Electronic Expansion Valve	` 07334468	1
10	Electric Expand Valve Fitting	' 4304413205	1
11	Secondary Water Tray	` 26902207	1
12	Choke Plug	` 76718209	8
13	Main water Tray	` 26902204	1

NO.	Model	GMV-NX224P/A(X2.0)-M	Qty.
	Product Code	CM800N3620	
	Part Name	Part Code	
14	Filter Sub-Assy	` 1172220201	1
15	Motor for Centrifugal Fan	` 1570220201	1
16	Fan Motor	` 15702245	1
17	Right Side Plate Sub-Assy	` 01312200017	1
18	Rear Side Plate Sub-Assy	` 01312200019	1
19	Blower Mounting Plate	` 01322200006	1
20	Electric cabinet board	` 01394100524	1
21	Capacitor CBB65	' 33000074	1
22	Terminal Board	` 4201115404	1
23	Main Board	` 30226000004	1
24	Terminal Board	' 4201800002601	1
25	Top Cover Plate Sub-Assy	` 01262200013	1
26	Left Side Plate Sub-Assy	` 01312200015	1
27	Sensor Sub-assy	` 39008000103G	1
28	Display Board	` 30296000040	1

Above data is subject to change without notice,pls reference the SP in global service website.

5.12 Console Type Indoor Unit

Exploded View of GMV-ND22C/A-T、GMV-ND28C/A-T、GMV-ND36C/A-T、GMV-ND45C/A-T、GMV-ND50C/A-T

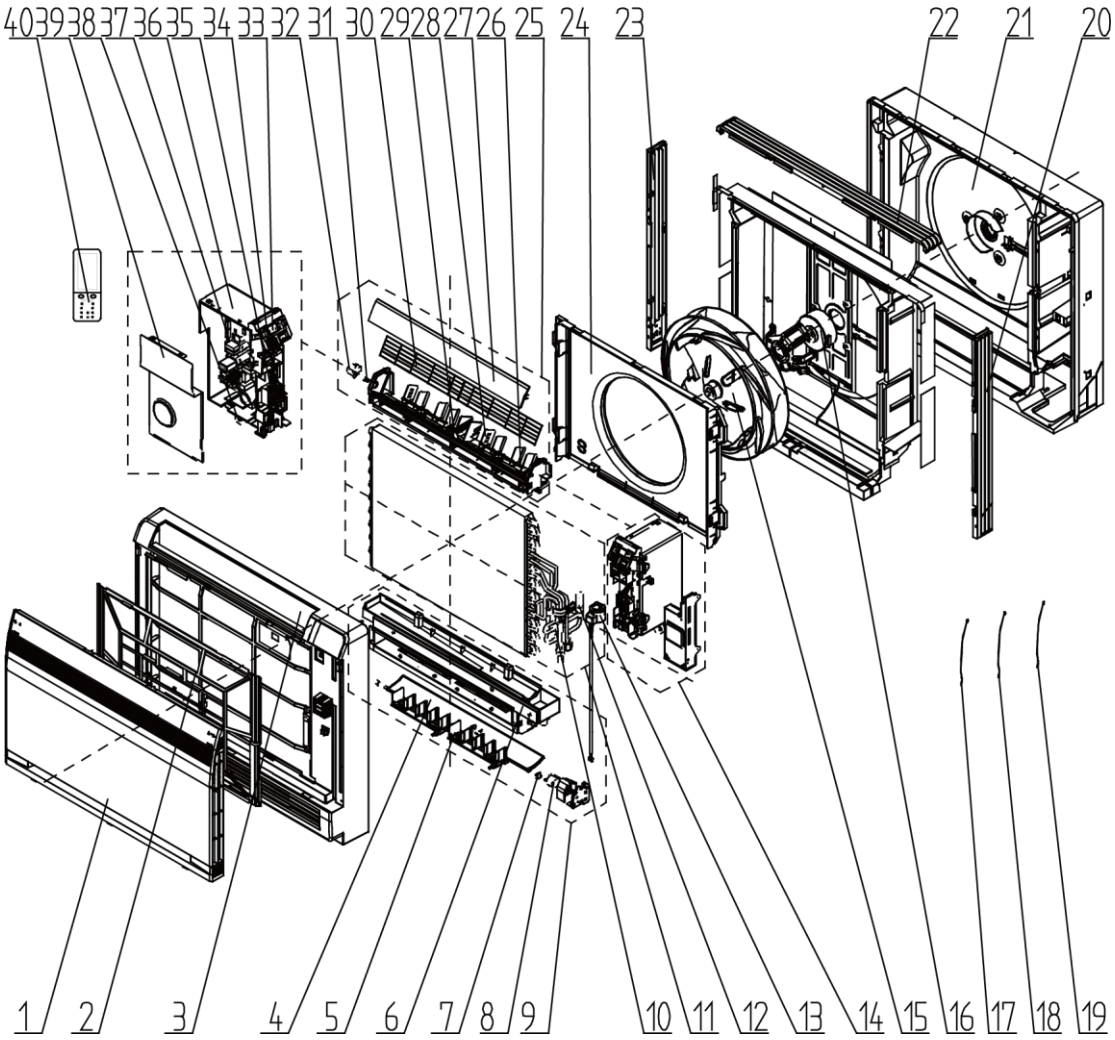

No.	Name of part	For the following unit	
		Unit	Product Code
		GMV-ND22C/A-T	CM400N0140
		GMV-ND28C/A-T	CM400N0070
		GMV-ND36C/A-T	CM400N0080
		GMV-ND45C/A-T	CM400N0150
		GMV-ND50C/A-T	CM400N0090
		Part code	Quantity
1	Front Panel Assy	` 20012756	1
2	Filter Sub-Assy	` 11122139	1
3	Front Case Assy	` 20012601	1
4	Air Louver(lower)	` 10512146	1
5	Air Louver(lower)	` 10512144	2
6	Water Tray	` 20182140	1
7	Axis(lower step motor)	` 10542034	1
8	Stepping Motor	` 1521210101	1
9	Water Tray Assy	` 20182141	1
10	Strainer	` 07213029	1
11	Evaporator Assy	` 01024100143	1
12	Electronic Expansion Valve	` 07334282	1
13	Electric Expand Valve Fitting	` 4304000102	1
14	Electric Box Assy	` 01394100489	1
15	Centrifugal Fan	` 01394100489	1
16	Brushless DC Motor	` 15704100012	1
17	Temperature Sensor	` 3900005910	1
18	Temperature Sensor	` 390000597	1
19	Temperature Sensor	` 3900019824	1
20	Let Side Plate	` 20052011	1
21	Rear Case	` 22202461	1
22	Top Side Plate	` 20052013	1
23	Right Side Plate	` 20052012	1
24	Diversion Circle	` 10371212	1
25	Louver Motor Sub-assy	' 00021100001	1
26	Swing Lever	` 10582096	2
27	Guide Louver (upper)	` 10512145	1
28	Air Louver(upper)	` 10512143	2
29	Shaft of Guide Louver	` 10542020	2
30	Rear Grill	` 01472024	1

31	Crank	` 73012005	1
32	Stepping Motor	` 1521210101	1
33	Display Board	` 30568131	1
34	Pinboard	` 30278000001	1
35	Terminal Board	` 42010268	1
36	Electric Board	` 20112116	1
37	Main Board	` 30226000080	1
38	Magnetic Ring	` 49010104	1
39	Shield Cover of Electric Box Sub-assy	` 01592169	1
40	Remote Controller	` 30510589	1

Above data is subject to change without notice,pls reference the SP in global service website.

5.13 Wall Mounted type Indoor Unit

Exploded View of GMV-N22G/A3A-K、GMV-N28G/A3A-K

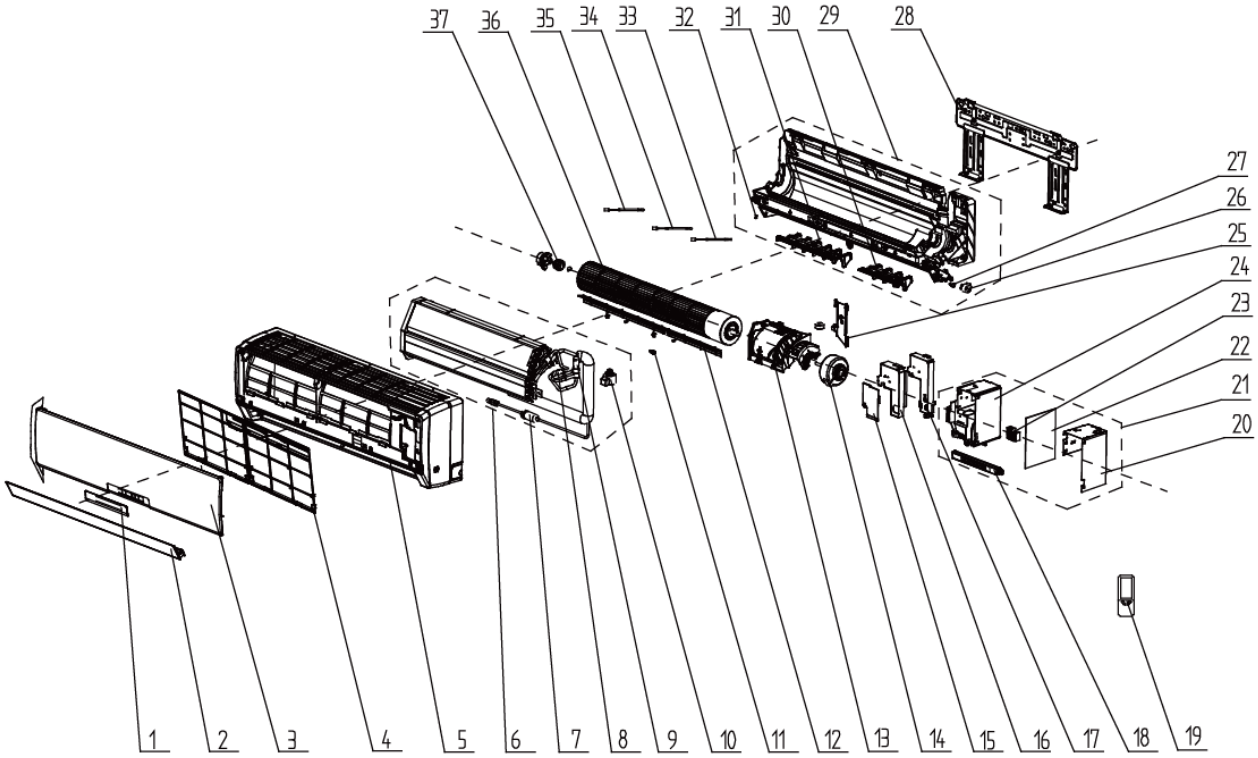

No.	Name of part	For the following unit	
		Unit	Product Code
		GMV-N22G/A3A-K	CM100N1350
		GMV-N28G/A3A-K	CM100N1340
		Part code	Quantity
1	Receiver Window	'22432230	1
2	Guide Louver	'10512157	1
3	Front Panel B1	'20012122S	1
4	Filter Sub-Assy	1112220403	1

5	Front Case Sub-assy	'2001213931	1
6	Evaporator Assy	01024100097	.2
7	Strainer	'07414100006	...4
8	Strainer	'07213050	...4
9	Electronic Expansion Valve	'07334463	...4
10	Electric Expand Valve Fitting	'4304413217	.2
11	Axile Bush	'10542036	1
12	Rear Grill	'01472013	1
13	Motor Press Plate	'26904100117	1
14	Fan Motor	'1501208905	1
15	Electric Box Cover2	'2012207504	1
16	Shield Cover of Electric Box Sub-assy	'01592073	1
17	Electric Box Cover1	'2224213502	1
18	Display Board	'30565007	.2
19	Remote Controller	'30510589	1
20	Lower Shield Sub-assy of Electric Box	'01592072	.2
21	Electric Box Assy	'01394100451	1
22	Main Board	'30226000061	.2
23	Terminal Board	'42010268	.2
24	Electric Box	'2011216702	.2
25	Connecting pipe clamp	'26112164	1
26	Stepping Motor	'1521212901	.2
27	Crank	'10582070	.2
28	Wall Mounting Frame	'01252021	1
29	Rear Case Sub-Assy	'2220294712	.2
30	Air Louver 1	'10512164	.2
31	Air Louver 2	'10512165	.2
32	Left Axile Bush	'10512037	.2
33	Temperature Sensor	'390000454	1
34	Temperature Sensor	'39000076G	1
35	Temperature Sensor	'390002072G	1
36	Cross Flow Fan	'10454101	1
37	O-Gasket of Cross Fan Bearing	'76512203	..3

Above data is subject to change without notice,pls reference the SP in global service website.

GMV-N36G/A3A-K、GMV-N45G/A3A-K、GMV-N50G/A3A-K

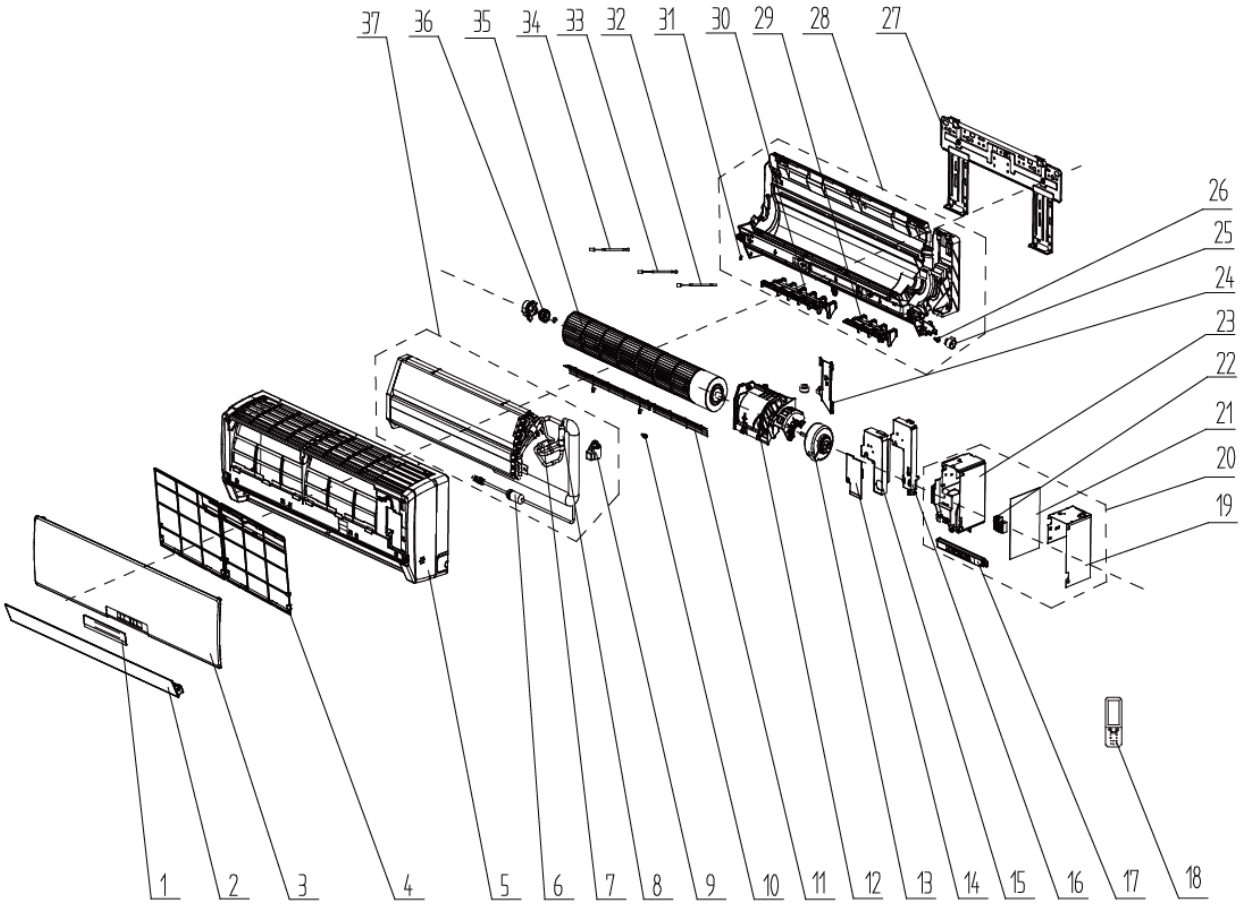

No.	Name of part	For the following unit	
		Unit	Product Code
		GMV-N36G/A3A-K	CM100N1360
		GMV-N45G/A3A-K	CM100N1370
		GMV-N50G/A3A-K	CM100N1330
		Part code	Quantity
1	Receiver Window	22432173	1
2	Guide Louver	10512115	1
3	Front Panel Assy	20012260	1
4	Filter Sub-Assy	1112000000	2
5	Front Case Sub-assy	20022172	1
6	Strainer	` 07414100006	1
7	Strainer	7213050	1
8	Electronic Expansion Valve	7334466	1
9	Electric Expand Valve Fitting	4304000000	1
10	Axile Bush	10542036	1
11	Mesh Enclosure(Air Outlet)	1472015	1
12	Motor Press Plate	26904264	1
13	Fan Motor	1501000000	1
14	Electric Box Cover	2011000000	1
15	Shield Cover of Electric Box	1592092	1
16	Electric Box Cover1	2012000000	1
17	Display Board	30565038	1
18	Remote Controller	30510589	1
19	Lower Shield of Electric Box	1592091	1

20	Electric Box Assy	1394000000	1
21	Main Board	30230000000	1
22	Terminal Board	42010268	1
23	Electric Box	2011000000	1
24	Connecting pipe clamp	26112164	1
25	SteppingMotor	15012086	1
26	Crank	10582070	1
27	Wall Mounting Frame	1252218	1
28	Rear Case Sub-Assy	2220000000	1
29	Air Louver 1	10512708	1
30	Air Louver 2	10512709	1
31	Left Axile Bush	10512037	1
32	Temperature Sensor	39000076G	1
33	Temperature Sensor	390000454	1
34	Temperature Sensor	390002072G	1
35	Cross Flow Fan	10454102	1
36	O-Gasket of Cross Fan Bearing	76512203	1
37	Evaporator Assy	` 01024100101	1

Above data is subject to change without notice,pls reference the SP in global service website.

GMV-N56G/A3A-K、GMV-N63G/A3A-K、GMV-N71G/A3A-K

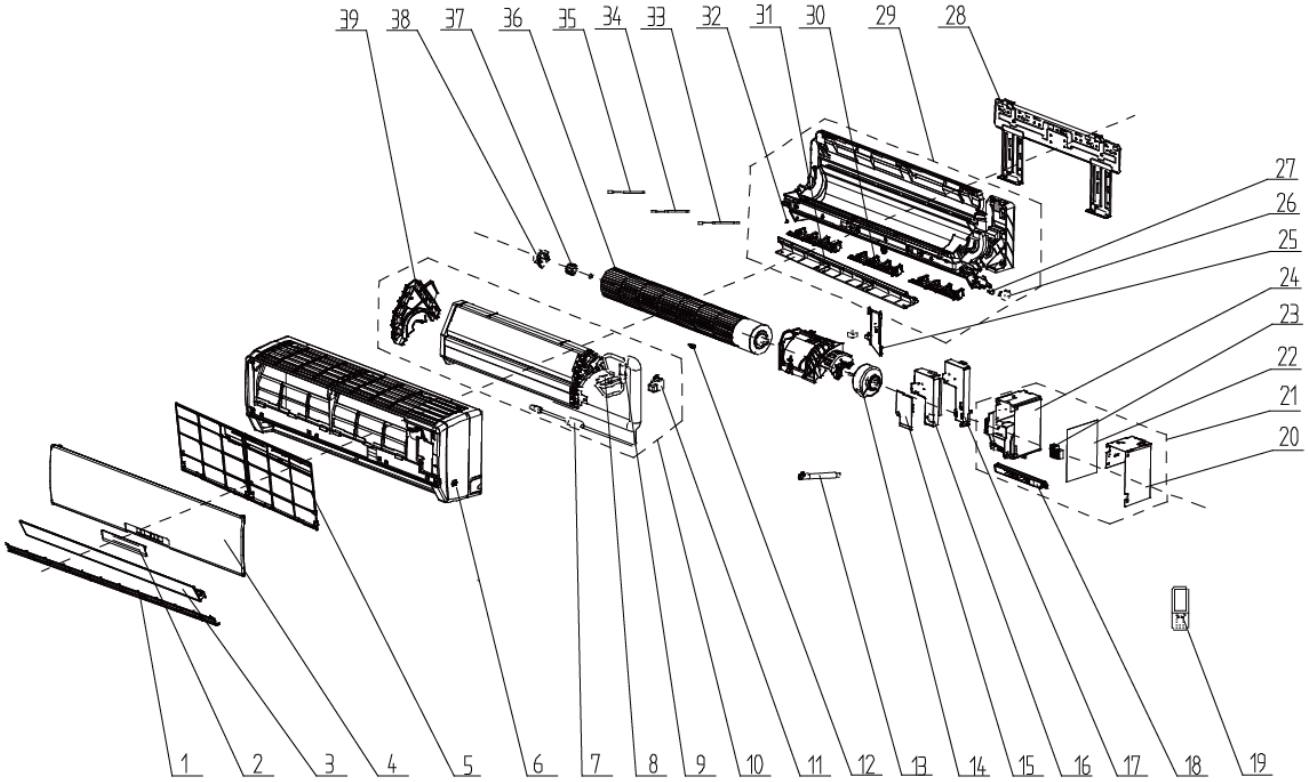

No.	Name of part	For the following unit	
		Unit	Product Code
		GMV-N56G/A3A-K	CM100N1380
		GMV-N63G/A3A-K	CM100N1390
		GMV-N71G/A3A-K	CM100N1320
		Part code	Quantity
1	Receiver Window	'22432230	1
2	Guide Louver	'10512157	1
3	Front Panel B1	'20012122S	1
4	Filter Sub-Assy	1112220403	1
5	Front Case Sub-assy	'2001213931	1
6	Evaporator Assy	01024100097	.2
7	Strainer	'07414100006	...4
8	Strainer	'07213050	...4
9	Electronic Expansion Valve	'07334463	...4
10	Electric Expand Valve Fitting	'4304413217	.2
11	Axile Bush	'10542036	1
12	Rear Grill	'01472013	1
13	Motor Press Plate	'26904100117	1
14	Fan Motor	'1501208905	1
15	Electric Box Cover2	'2012207504	1
16	Shield Cover of Electric Box Sub-assy	'01592073	1
17	Electric Box Cover1	'2224213502	1
18	Display Board	'30565007	.2
19	Remote Controller	30510589	1
20	Lower Shield Sub-assy of Electric Box	'01592072	.2
21	Electric Box Assy	'01394100451	1
22	Main Board	'30226000061	.2
23	Terminal Board	'42010268	.2
24	Electric Box	'2011216702	.2
25	Connecting pipe clamp	'26112164	1
26	Stepping Motor	'1521212901	.2
27	Crank	'10582070	.2
28	Wall Mounting Frame	'01252021	1
29	Rear Case Sub-Assy	'2220294712	.2
30	Air Louver 1	'10512164	.2
31	Air Louver 2	'10512165	.2
32	Left Axile Bush	'10512037	.2
33	Temperature Sensor	'390000454	1
34	Temperature Sensor	'39000076G	1
35	Temperature Sensor	'390002072G	1
36	Cross Flow Fan	'10454101	1
37	O-Gasket of Cross Fan Bearing	'76512203	..3

Above data is subject to change without notice,pls reference the SP in global service website.

5.14 Super High Static Pressure Duct Type Indoor Unit

Exploded View of GMV-ND22PHS/B-T、GMV-ND25PHS/B-T、GMV-ND28PHS/B-T、GMV-ND32PHS/B-T、GMV-ND36PHS/B-T：

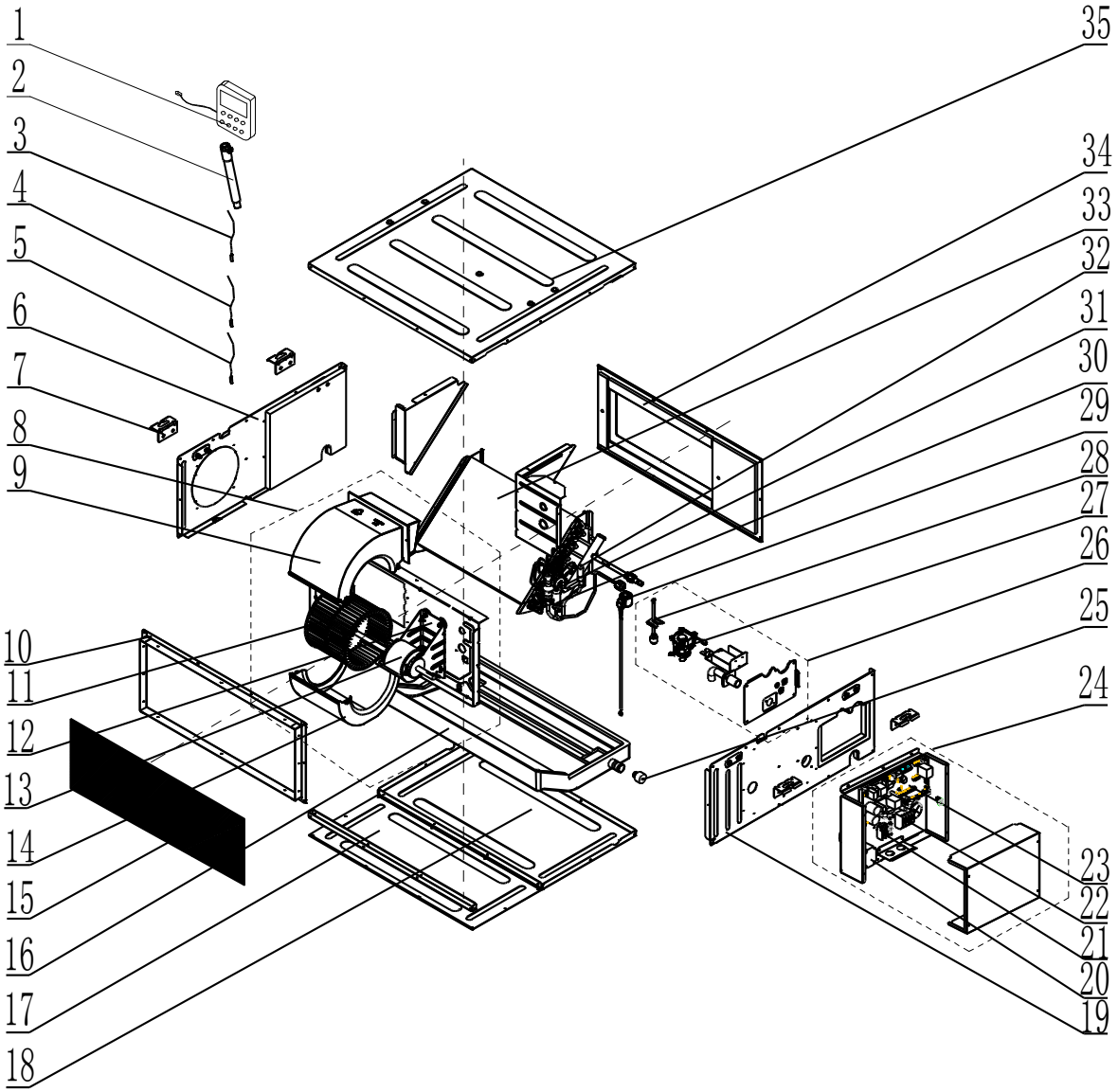

No.	Name of part	For the following unit	
		Unit	Product Code
		GMV-ND22PHS/B-T	CM810N0300
		GMV-ND25PHS/B-T	CM810N0310
		GMV-ND28PHS/B-T	CM810N0320
		GMV-ND32PHS/B-T	CM810N0330
		GMV-ND36PHS/B-T	CM810N0340
		Part code	Quantity
1	Display Board	'30296000040	1
2	Drain Hose Sub-Assy	'05232050	1
3	Temperature Sensor	'390000454	1
4	Temperature Sensor	'390000592	1
5	Temperature Sensor	'3900005910	1
6	Right Side Plate Assy	'01315200148	1

7	Hook	'02112466	4
8	Centrifugal Fan Assy	'15404100074	1
9	Propeller Housing(Upper)	'26905200078	1
10	Return Air Frame Sub-Assy	'017026000004	1
11	Centrifugal Fan	'10455200003	1
12	Supporter(Fan motor)	'0180520027201	1
13	Brushless DC Motor	'1570520000501	1
14	Propeller Housing(Lower)	'26905200079	1
15	Filter Sub-Assy	111001000055	1
16	Foam Sub-assy	'12505200038	1
17	Cover Of Air-In	'01265200182	1
18	Bottom Cover Plate	'01265200181	1
19	Left Side Plate Assy	'01315200147	1
20	Inductance	'43128000014	1
21	Terminal Board	'4201115402	1
22	Terminal Board	4201800002601	1
23	Main Board	'30226000089	1
24	Electric Box Assy	'100002000985	1
25	Choke Plug Of Drain Pipe	'76815214	2
26	Seal Plate Assy	'01495200079	1
27	Water Pump	'43138000058	1
28	Water Level Switch	'45020216	1
29	Electric Expand Valve Fitting	'4304413215	1
30	Strainer	'07415210	1
31	Strainer	'0741410000601	1
32	Electronic Expansion Valve	'07334466	1
33	Evaporator Assy	'011001000296 '01024100171	1
34	Air Outlet Frame Assy	'01374100070	1
35	Top Cover Board Assy	01264100081	1

Above data is subject to change without notice,pls refer the SP in global service website.

Exploded View of GMV-ND40PHS/B-T、GMV-ND45PHS/B-T、GMV-ND50PHS/B-T：

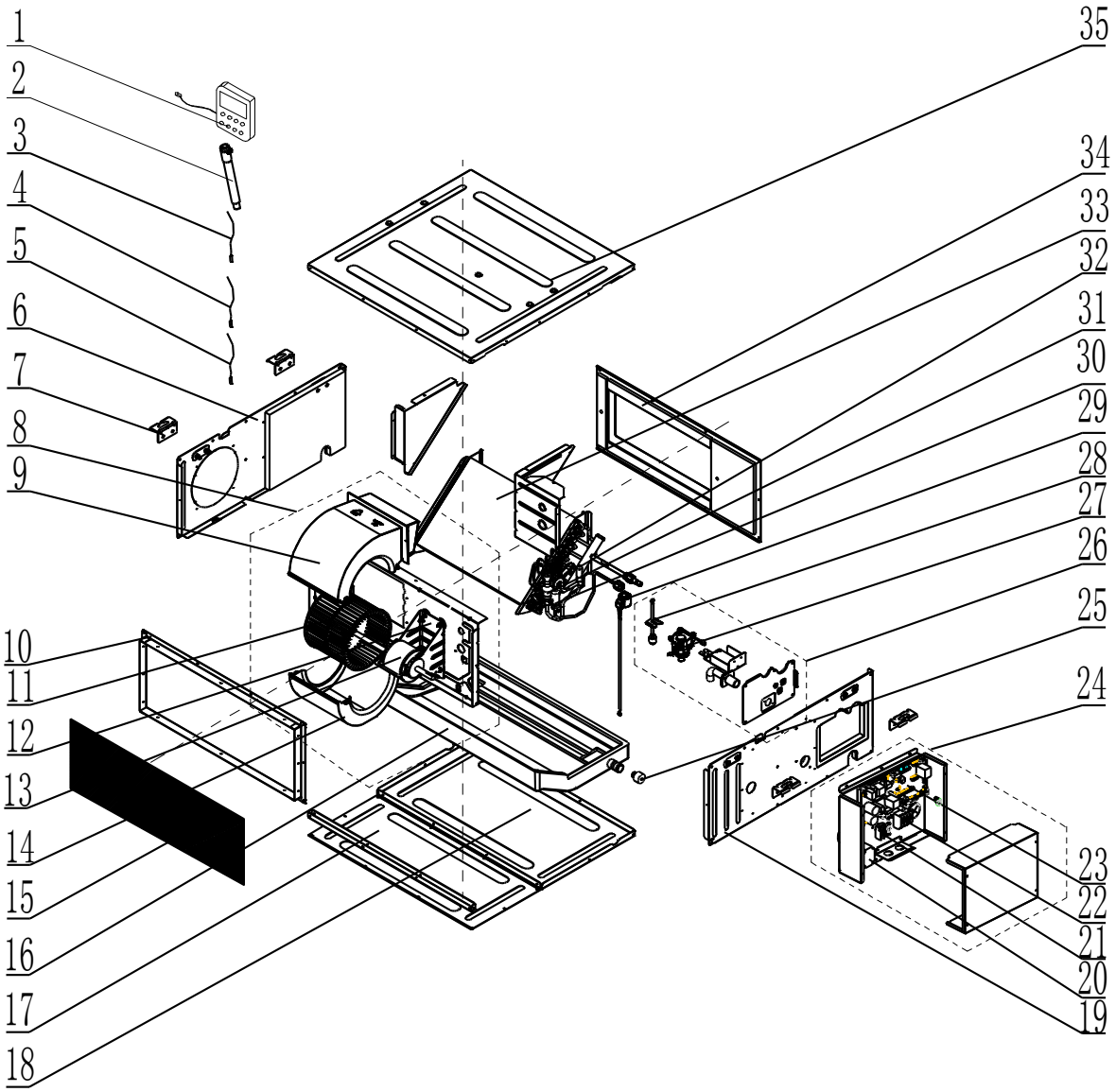

No.	Name of part	For the following unit	
		Unit	Product Code
		GMV-ND40PHS/B-T	CM810N0350
		GMV-ND45PHS/B-T	CM810N0360
		GMV-ND50PHS/B-T	CM810N0370
		Part code	Quantity
1	Display Board	'30296000040	1
2	Drain Hose Sub-Assy	'05232050	1
3	Temperature Sensor	'390000454	1
4	Temperature Sensor	'390000592	1
5	Temperature Sensor	'3900005910	1
6	Right Side Plate Assy	'01315200148	1
7	Hook	'02112466	4
8	Centrifugal Fan Assy	'15404100074	1
9	Propeller Housing(Upper)	'26905200078	1
10	Return Air Frame Sub-Assy	'017026000004	1

11	Centrifugal Fan	'10455200003	1
12	Supporter(Fan motor)	'0180520027201	1
13	Brushless DC Motor	'1570520000501	1
14	Propeller Housing(Lower)	'26905200079	1
15	Filter Sub-Assy	111001000055	1
16	Foam Sub-assy	'12505200038	1
17	Cover Of Air-In	'01265200182	1
18	Bottom Cover Plate	'01265200181	1
19	Left Side Plate Assy	'01315200147	1
20	Inductance	'43128000014	1
21	Terminal Board	'4201115402	1
22	Terminal Board	4201800002601	1
23	Main Board	'30226000089	1
24	Electric Box Assy	'100002000985	1
25	Choke Plug Of Drain Pipe	'76815214	2
26	Seal Plate Assy	'01495200079	1
27	Water Pump	'43138000058	1
28	Water Level Switch	'45020216	1
29	Electric Expand Valve Fitting	'4304413215	1
30	Strainer	'07415210	1
31	Strainer	'0741410000601	1
32	Electronic Expansion Valve	'07334466	1
33	Evaporator Assy	'011001000296 '01024100171	1
34	Air Outlet Frame Assy	'01374100070	1
35	Top Cover Board Assy	01264100081	1

Above data is subject to change without notice,pls refer the SP in global service website.

Exploded View of GMV-ND56PHS/B-T、GMV-ND63PHS/B-T、GMV-ND71PHS/B-T、GMV-ND80PHS/B-T：

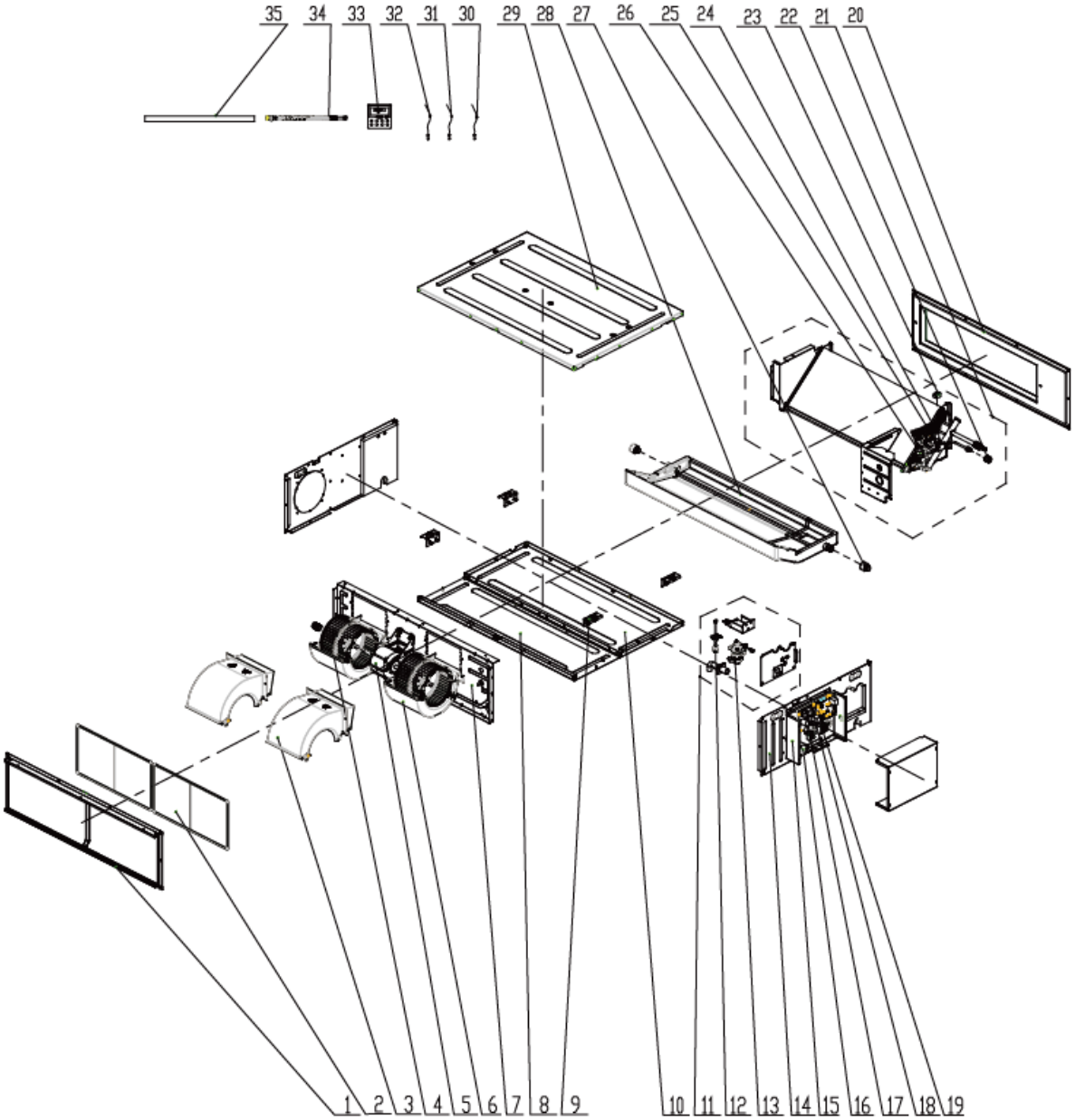

No.	Name of part	For the following unit	
		Unit	Product Code
		GMV-ND56PHS/B-T	CM810N0380
		GMV-ND63PHS/B-T	CM810N0390
		GMV-ND71PHS/B-T	CM810N0400
		GMV-ND80PHS/B-T	CM810N0410
		Part code	Quantity
1	Centrifugal Fan Assy	'017026000002	1
2	Filter Sub-Assy	'111001000045	2
3	Propeller Housing(Upper)	'26905200078	2
4	Centrifugal Fan	'10455200003	2
5	Brushless DC Motor	'15705200016	1
6	Propeller Housing(Lower)	'26905200079	2
7	Blower Mounting Plate Sub-Assy	'01325200079	1
8	Cover Of Air-In	'01265200132	1
9	Hook	'02112466	4
10	Bottom Cover Plate	'01265200131	1

11	Seal plate Assy	'01495200079	1
12	Water Level Switch	'45020216	1
13	Water Pump	'43138000058	1
14	Left Side Plate Assy	'01315200147	1
15	Electric Box Assy	'100002000985	1
16	Inductance	'43128000014	1
17	Terminal Board	'4201115402	1
18	Main Board	'30226000089	1
19	Terminal Board	'4201800002601	1
20	Air Outlet Frame Assy	'01375200026	1
21	Evaporator Assy	'01024100173 '0102410017301	1
22	Sealing Cap(Pressure Warning)	'2611219201	1
23	Electric Expand Valve Fitting	'4304413215	1
24	Electronic Expansion Valve	'07334466	1
25	Strainer	'0741410000601	1
26	Strainer	'07415210	1
27	Choke Plug of Drain Pipe	'76815214	2
28	Foam Sub-assy	'12505200025	1
29	Top Cover Board Assy	'01265200130	1
30	Temperature Sensor	'3900005910	1
31	Temperature Sensor	'390000592	1
32	Temperature Sensor	'390000454	1
33	Display Board	'30296000040	1
34	Corrugated Pipe	'05015408	1
35	Drain Hose Sub-Assy	'05232050	1

Above data is subject to change without notice,pls refer the SP in global service website.

Exploded View of GMV-ND90PHS/B-T、GMV-ND100PHS/B-T、GMV-ND112PHS/B-T、GMV-ND125PHS/B-T：

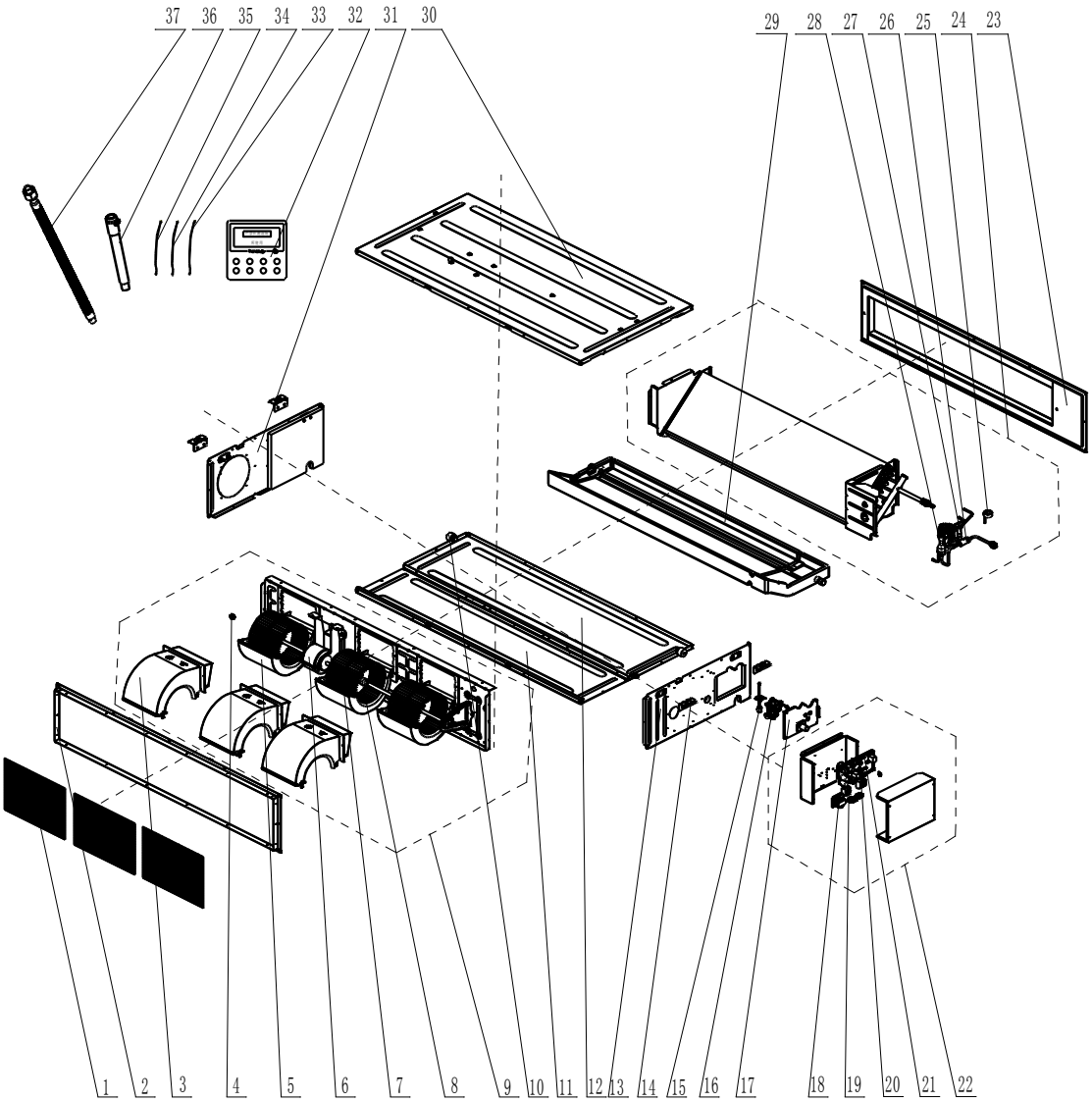

No.	Name of part	For the following unit	
		Unit	Product Code
		GMV-ND90PHS/B-T	CM810N0420
		GMV-ND100PHS/B-T	CM810N0430
		GMV-ND112PHS/B-T	CM810N0440
		GMV-ND125PHS/B-T	CM810N0450
		Part code	Quantity
1	Filter Sub-Assy	111001000052	3
2	Return Air Frame Sub-Assy	'017026000003	1
3	Propeller Housing(Upper)	'26905200078	3
4	Fan Bearing	'76512210	1
5	Propeller Housing(Lower)	'26905200079	3
6	Brushless DC Motor	'1570940000601	1
7	Centrifugal Fan	'10455200003	3
8	Joint Slack	'73018731	1
9	Centrifugal Fan Assy	'000052000028	1

10	Choke Plug Of Drain Pipe	'76815214	2
11	Cover Plate(Air Return)	'01265200123	1
12	Bottom Cover Plate	'01265200125	1
13	Left Side Plate Assy	'01315200147	1
14	Hook	'02112466	4
15	Water Level Switch	'45020216	1
16	Water Pump	'43138000058	1
17	Seal Plate	01495200078	1
18	Reactor	'43138000047	1
19	Terminal board	'4201115402	1
20	Terminal Board	4201800002601	1
21	Main Board	'300002000009	1
22	Electric Box Assy	'100002000984	1
23	Air Outlet Frame Assy	'01375200023	1
24	Evaporator Assy	011001000070	1
25	Electric Expand Valve Fitting	'4304413215	1
26	Strainer	0741410000601	1
27	Electronic Expansion Valve	'07334468	1
28	Strainer	'07415210	1
29	Foam Sub-Assy	12505200021	1
30	Top Cover Board Assy	'01264100105	1
31	Right Side Plate Assy	'01315200148	1
32	Display Board	'30296000040	1
33	Temperature Sensor	'3900005910	1
34	Temperature Sensor	'390000592	1
35	Temperature Sensor	'390000454	1
36	Drain Hose Sub-Assy	'05232050	1
37	Corrugated Pipe	'05015408	1

Above data is subject to change without notice,pls refer the SP in global service website.

Exploded View of GMV-ND140PHS/B-T、GMV-ND160PHS/B-T：

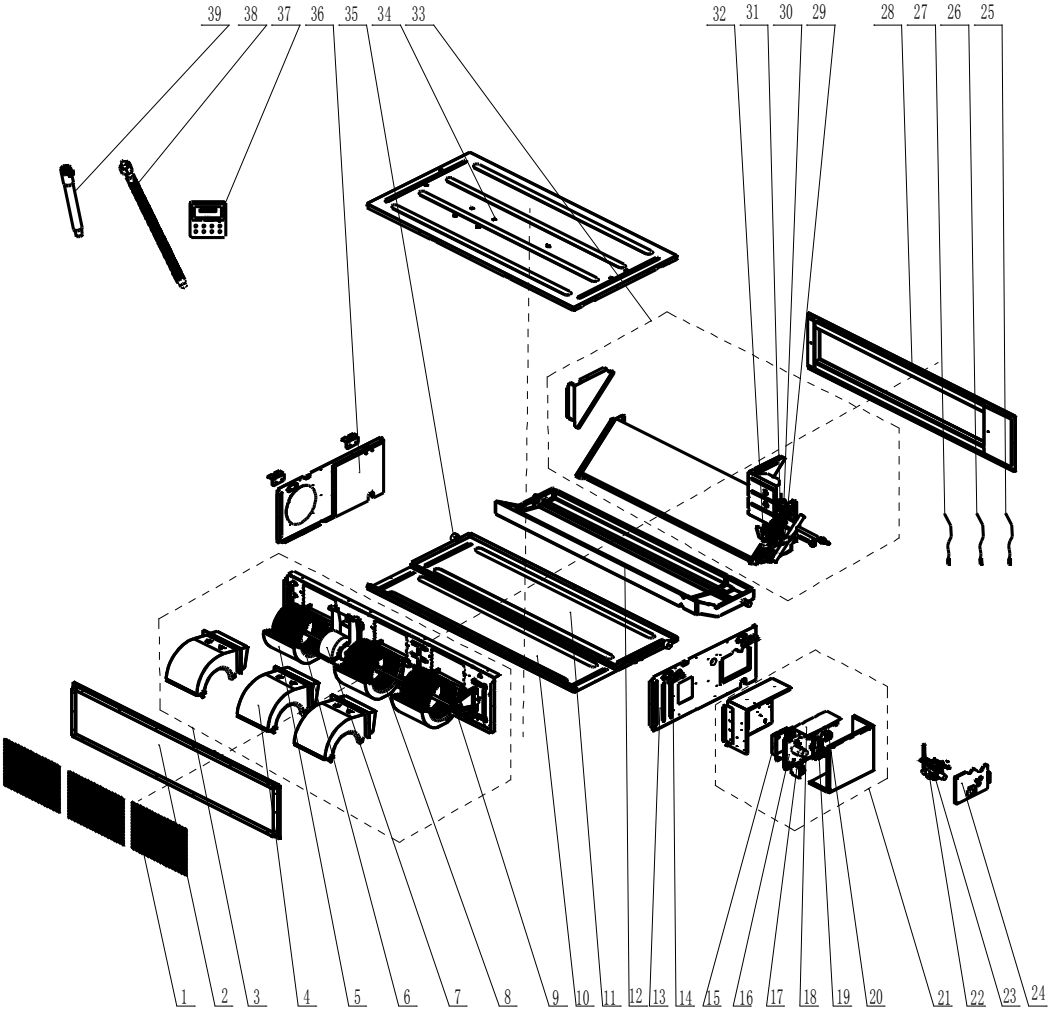

No.	Name of part	For the following unit	
		Unit	Product Code
		GMV-ND140PHS/B-T	CM810N0460
		GMV-ND160PHS/B-T	CM810N0840
		Part code	Quantity
1	Filter Sub-Assy	'111001000052	3
2	Return Air Frame Sub-Assy	'017026000003	1
3	Centrifugal Fan Assy	'000052000029	1
4	Propeller Housing(Upper)	'26905200078	3
5	Propeller Housing(Lower)	'26905200079	3
6	Centrifugal Fan	'10455200003	3
7	Brushless DC Motor	'1570940000801	1
8	Joint Slack	'73018731	1
9	Fan Bearing	'76512210	1
10	Cover Plate(Air return)	'01265200123	1
11	Bottom Cover Plate	'01265200125	1
12	Foam Sub-Assy(Water Tray)	'12505200021	1
13	Left Side Plate Assy	'01314100118	1
14	Hook	'02112466	4
15	Radiator	49018000068	1

16	Main Board	30221000033	1
17	Reactor	'43138000047	1
18	Main Board	30226000092	1
19	Terminal board	4201115402	1
20	Terminal Board	4201800002601	1
21	Electric Box Assy	'100002001512	1
22	Water Level Switch	'45020216	1
23	Water Pump	'43138000058	1
24	Seal Plate	'01495200078	1
25	Temperature Sensor	'3900005910	1
26	Temperature Sensor	'390000592	1
27	Temperature Sensor	'390000454	1
28	Air Outlet Frame Assy	'01375200023	1
29	Strainer	0741410000601	1
30	Electric Expand Valve Fitting	'4304413215	1
31	Electronic Expansion Valve	'07334468	1
32	Strainer	07415210	1
33	Evaporator Assy	'011001000070 '011001000238	1
34	Top Cover Board Assy	'01264100105	1
35	Choke Plug Of Drain Pipe	'76815214	2
36	Right Side Plate Assy	'01315200148	1
37	Display Board	'30296000040	1
38	Corrugated Pipe	'05015408	1
39	Drain Hose Sub-Assy	'05232050	1

Above data is subject to change without notice,pls reference the SP in global service website.

JF00302966

GREE ELECTRIC APPLIANCES, INC. OF ZHUHAI

Add: West Jinji Rd, Qianshan, Zhuhai, Guangdong, China, 519070
Tel: (+86-756) 8522218 Fax: (+86-756) 8669426
E-mail: gree@gree.com.cn www.gree.com

For continuous improvement in the products, Gree reserves the right to modidy the product specification and appearance in this manual without notice and without incurring any obligations.