GREE
Change for life

Owner's Manual

Original Instructions

Hydro Box

Model:

NRQR16L/A-T

NRQR30L/A-T

Thank you for choosing air conditioners. Please read this Owner's Manual carefully before operation and retain it for future reference.

If you have lost the Owner's Manual, please contact the local agent or visit www.gree.com or send an email to global@cn.gree.com for the electronic version.

GREE ELECTRIC APPLIANCES, INC. OF ZHUHAI

To Users

Thank you for selecting Gree product. Please read this instruction manual carefully before installing and using the product, so as to master and correctly use the product. In order to guide you to correctly install and use our product and achieve expected operating effect, we hereby instruct as below:

(1) This appliance can be used by children aged from 8 years and above and persons with reduced physical, sensory or mental capabilities or lack of experience and knowledge if they have been given supervision or instruction concerning use of the appliance in a safe way and understand the hazards involved. Children shall not play with the appliance. Cleaning and user maintenance shall not be made by children without supervision.

(2) In order to ensure reliability of product, the product may consume some power under stand-by status for maintaining normal communication of system and preheating refrigerant and lubricant. If the product is not to be used for long, cut off the power supply; please energize and preheat the unit in advance before reusing it.

(3) Please properly select the model according to actual using environment; otherwise it may impact the using convenience.

(4) This product can't be installed at corrosive, inflammable or explosive environment or the place with special requirements, such as kitchen. Otherwise, it will affect the normal operation or shorten the service life of the unit, or even cause fire hazard or serious injury. As for above special places, please adopt special air conditioner with anti-corrosive or anti-explosion function.

(5) If the product needs to be installed, moved or maintained, please contact our designated dealer or local service center for professional support. Users should not disassemble or maintain the unit by themselves, otherwise it may cause relative damage, and our company will bear no responsibilities.

(6) All the illustrations and information in the instruction manual are only for reference. In order to make the product better, we will continuously conduct improvement and innovation. If there is adjustment in the product, please subject to actual product.

Exception Clauses

Manufacturer will bear no responsibilities when personal injury or property loss is caused by the following reasons:

(1) Damage the product due to improper use or misuse of the product;

(2) Alter, change, maintain or use the product with other equipment without abiding by the instruction manual of manufacturer;

(3) After verification, the defect of product is directly caused by corrosive gas;

(4) After verification, defects are due to improper operation during transportation of product;

(5) Operate, repair, maintain the unit without abiding by instruction manual or related regulations;

(6) After verification, the problem or dispute is caused by the quality specification or performance of parts and components that produced by other manufacturers;

(7) The damage is caused by natural calamities, bad using environment or force majeure.

Contents

1 Product Description and Characteristics ····· 1
1.1 Instructions to Users ····· 1
1.2 Safety Notices ····· 2
1.3 Product Characteristics ····· 3
2 Unit Structure and Performance Parameters ····· 4
2.1 Internal Structure of Hydro Box ····· 4
2.2 Parameters of Hydro Box ····· 4
2.3 Configuration of Main Unit and Hydro Box ····· 5
3 Preparations for Installation ····· 5
3.1 Standard Fittings ····· 5
3.2 Installation Position Selection ····· 6
3.3 Requirements of Communication Wire Selection ····· 7
3.4 Requirements for Electrical Wiring ····· 7
4 Unit Installation ····· 8
4.1 Notices ····· 8
4.2 Product Installation ····· 10
4.3 Wiring Work ····· 24
4.4 Confirm DIP Switch of Main Board ····· 26
4.5 Engineering Accessories Selection and Installation ····· 28
4.6 Test Run ····· 29
5 Common Malfunction and Troubleshooting ····· 32
5.1 Error Code of Hydro Box ····· 32
5.2 Troubleshooting ····· 32
5.3 After-sales Services ····· 33

1 Product Description and Characteristics

1.1 Instructions to Users

- Before carrying out any maintenance or repair of the water heater, please always disconnect the power supply and have the water heater adjusted and repaired by professional technicians.
- Please make sure that the power socket complies with the national standard and it is securely earthed. Never use the water heater which is not securely earthed.
- Before energizing, please ensure that the water heater is filled with water; otherwise it will cause malfunction.
- The hydro box must be installed indoors with ambient temperature from 4°C~35°C. If you put the unit out of use for a long period, please make sure to drain the water thoroughly out of the hydro box and floor heating pipe, in order to prevent the system from freezing.
- Hot water over 50°C will cause scald. Therefore, please make sure to mix the hot water with cold water before shower or washing. When the ambient temperature is lower than 0°C, please make sure to drain the water tank thoroughly if you are to travel out for a long period and the water heater is under de-energized state.
- After the water system is thoroughly drained, please make sure to disconnect the hydro box from the power supply.
- The hot water in the water heater is not drinkable. After a long time of use, scale may deposit in the water tank and cause change to the water quality. After you have washed the edible substances with the water in the container, please make sure to flush with clean tap water again.
- The water heater defaults a water temperature at 50°C. If the water temperature is too high, the unit's coefficient of performance (COP) will decrease.
- The most energy-saving mode is cooling while generating hot water. The unit can make judgment automatically and maximize the effect of heat recycling.
- This unit is provided with the function for quick generation of hot water.
- Please install the hydro box in a place strong enough to bear its weight. Otherwise, it will cause falling down of the unit, which may lead to injury.

1.2 Safety Notices

WARNING: If not abide them strictly, it may cause severe damage to the unit or the people.

NOTICE: If not abide them strictly, it may cause slight or medium damage to the unit or the people.

This sign indicates that the items must be prohibited. Improper operation may cause severe damage or death to people.

This sign indicates that the items must be observed. Improper operation may cause damage to people or property.

WARNING！

- Do not place the gasoline or other flammable substances close to water heater; otherwise it may cause fire accident.
- The water temperature displayed on the wired controller of water tank refers to the temperature around the measuring point. Generally, the outlet water temperature is higher than the value displayed on the screen. To avoid scald, please firstly discharge cold water and then adjust to your desired temperature.
- The power switch of water heater shall be located at a dry position out of the water spray. Never operate the power switch with wet hands; otherwise electric shock or injury may be caused.
- This product can't be installed at corrosive, inflammable or explosive environment or the place with special requirements, such as kitchen. Otherwise, it will affect the normal operation or shorten the service life of the unit, or even cause fire hazard or serious injury. As for above special places, please adopt special air conditioner with anti-corrosive or anti-explosion function.

NOTES！

- Before use of the water heater for the first time after installation, it must be filled with water before switching on. If energized when the water in the container is not full, the water heater will occur fault.
- In case of any fault to the water heater, it must be repaired by professional after-sales serviceman. No other person shall dismantle or repair the water heater.
- When the child is taking a shower, they must be under the adult's instructions. Never allow the child to operate the water heater.
- After the power cord is installed, please note to ensure that the power cord should not direct touch the sheet metal of electric box.
- The design pressure is 4.3 MPa. The thickness of pipe for installation should comply with the relevant national/continental regulations.
- Product graphics are only for reference. Please refer to actual products. Unspecified measure unit is mm.

1.3 Product Characteristics

(1) Energy Saving and Environment Friendly

The hot water is generated by using the waste heats from the air conditioner and the abundant heat source from atmosphere. Under cooling mode with hot water generation mode, we can optimize the control and realize the heat recycling.

(2) Safe and Reliable

This series of heat pump water heater is designed with a hydro box for transferring the heat from outdoor unit to pressure water tank. The pressure water tank is only used for storing hot water. The hydro box is connected to water tank via insulation pipes, so that the water is visibly separated from the electricity. This has radically eliminated the risk of electric leakage. To ensure safe use, this unit is also provided with multiple protections, e.g. freeze prevention protection. Furthermore, there is no risk of carbon monoxide poisoning or other hazards.

(3) Easy Use

The temperature of heated water is adjustable at an interval of 1°C between 35°C~55°C. Meanwhile, the unit can supply water to wash room and kitchen.

(4) Simple Operation

The user may, as needed for use of the hot water, select the standard hot water mode, night mode or preset mode. The user may set the water temperature as desired. The unit may be started or stopped according to the water temperature and the user's needs for water, so as to ensure supply of hot water 24 hours a day. Meanwhile, the unit may be set to work at the valley section of electric price, thus to reduce the power expenses and power shutdown.

(5) Easy Installation

The unit uses pressure water tank and transfers the hot water by using the water pressure in tap water pipe. Therefore, it is not needed to add water pump or other associated accessories. This has simplified the installation procedures and saved the cost.

2 Unit Structure and Performance Parameters

2.1 Internal Structure of Hydro Box

The hydro box consists of plate heat exchanger, electronic expansion valve and electric control. The internal structure is as shown below:

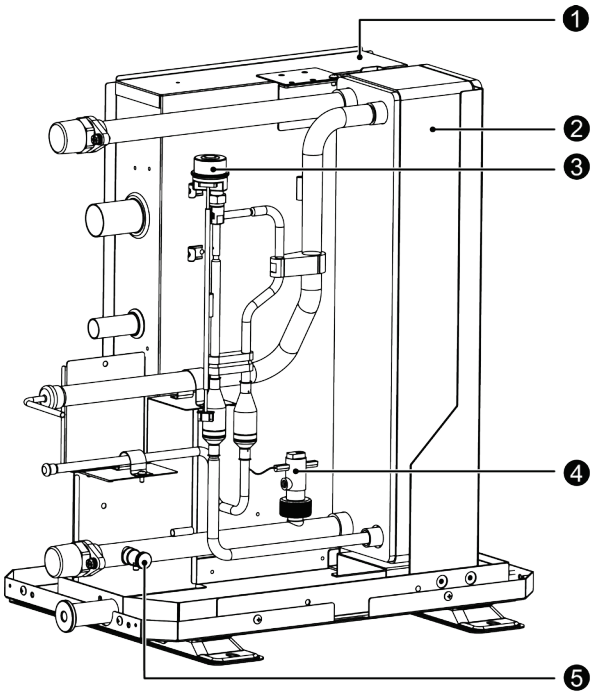

❶ Electric box assy
❷ Plate heat exchanger
❸ Electronic expension valve
❹ Water flow switch
❺ Water discharge valve

Fig.2.1

2.2 Parameters of Hydro Box

Model			NRQR16L/A-T	NRQR30L/A-T
Hot water heating capacity		kW	4.5(3.6~16)	4.5(3.6~30)
Max setting temperature of domestic hot water		°C	55(35~55)	55(35~55)
Floor heating capacity		kW	16	30
Max setting temperature of floor heating		°C	45(25~45)	45(25~45)
Power supply		-	220~240V-1ph-50Hz 208~230V-1ph-60Hz	220~240V-1ph-50Hz 208~230V-1ph-60Hz
Heat exchanger	Type	-	Plate heat exchanger	Plate heat exchanger
	Quantity	-	1	1
	Rated water flow	L/min	46	86
	Pressure Drop	kPa	27.5	38.5
Water system connection	Diameter of inlet/outlet water pipe	mm	Φ25	Φ25
	Thread specification	-	G1	G1
Refrigerant system connection	Gas pipe	mm	Φ15.9	Φ22.2
	Liquid pipe	mm	Φ9.52	Φ9.52
Outline dimension(W×D×H)		mm	515×330×606	515×330×606
Net weight		kg	36	40

NOTES!

① The parameters may change due to product improvement; please refer to the parameters

on the nameplate.

② As for the selection of water pump of hydro box, the flow of water pump should not be lower than 90% of rated flow in the above table to avoid affecting performance and reliability.

2.3 Configuration of Main Unit and Hydro Box

Outdoor unit model	The requirement of maximum number and capacity of hydro box	Limit of indoor unit ratio to outdoor unit rated capacity
GMV-VQ224WM/C-X	≤2 sets, and the total capacity of hydro box ≤32kW	50%~135%
GMV-VQ280WM/C-X	≤2 sets, and the total capacity of hydro box ≤32kW	
GMV-VQ335WM/C-X	≤2 sets, and the total capacity of hydro box ≤33.5kW	
GMV-VQ400WM/C-X	≤2 sets, and the total capacity of hydro box ≤40kW	
GMV-VQ450WM/C-X	≤2 sets, and the total capacity of hydro box ≤46kW	
GMV-VQ504WM/C-X	≤2 sets, and the total capacity of hydro box ≤50.4kW	
GMV-VQ560WM/C-X	≤2 sets, and the total capacity of hydro box ≤56kW	
GMV-VQ615WM/C-X	≤2 sets, and the total capacity of hydro box ≤61.5kW	
2 modular outdoor units	≤ 4 sets, and the total capacity of hydro box≤ 100% of the sum of the rated capacity of the outdoor units	
3 or 4 modular outdoor units	≤ 6 sets, and the total capacity of hydro box≤ 100% of the sum of the rated capacity of the outdoor units	

NOTES!

① The Hydro box must be installing with indoor units according the rule of the table above, otherwise it cannot work normally.

② This hydro box can only be used with NCHS*D mode exchange box. (* may be 1, 2, 4 or 8)

③ Each hydro box can only connect to one water tank at most. The volume of the water tank that can be connected to the 16kW hydro box cannot be more than 500L, and the volume of the water tank that can be connected to the 30kW hydro box cannot be more than 800L. (The water tank from Gree or local market is acceptable, only required inner coil water tank.)

④ The total floor heating load in each refrigeration system cannot exceed 100% of the sum of rated capacity of outdoor units.

3 Preparations for Installation

3.1 Standard Fittings

Use the following provided accessories according to the requirement.

No.	Name	Appearance	Q'ty	Usage
1	Wired Controller		1	To control the Hydro Box.
2	Owner’s manual		1	—

No.	Name	Appearance	Q'ty	Usage
3	Temperature sensor	—	2	To setup them with the solar and return water pump.
4	Teflon tape	—	2	With Teflon tape to ensure a watertight seal.
5	Swell screw	—	4	—
6	Discharge valve	—	2	Discharge air when debugging the water system.
7	Safety valve	—	1	For pressure relief of the circulating water system.
8	Automatic discharge valve	—	1	Discharge the air inside the system automatically for ensuring excellent heat exchange.
9	Strainer	—	1	For filtrating the impurities in the replenishing water.
10	Pressure maintaining valve	—	1	Maintain the back pressure of the valve within a certain range.

3.2 Installation Position Selection

(1) The location where the Hydro box shall be installed inside.

(2) The location should be able to withstand the weight of Hydro box.

3.2.1 Installation Space

(1) The following values are the least space for installation.

(2) If any service area is needed for service according to field circumstance, obtain enough service space.

Unit: mm

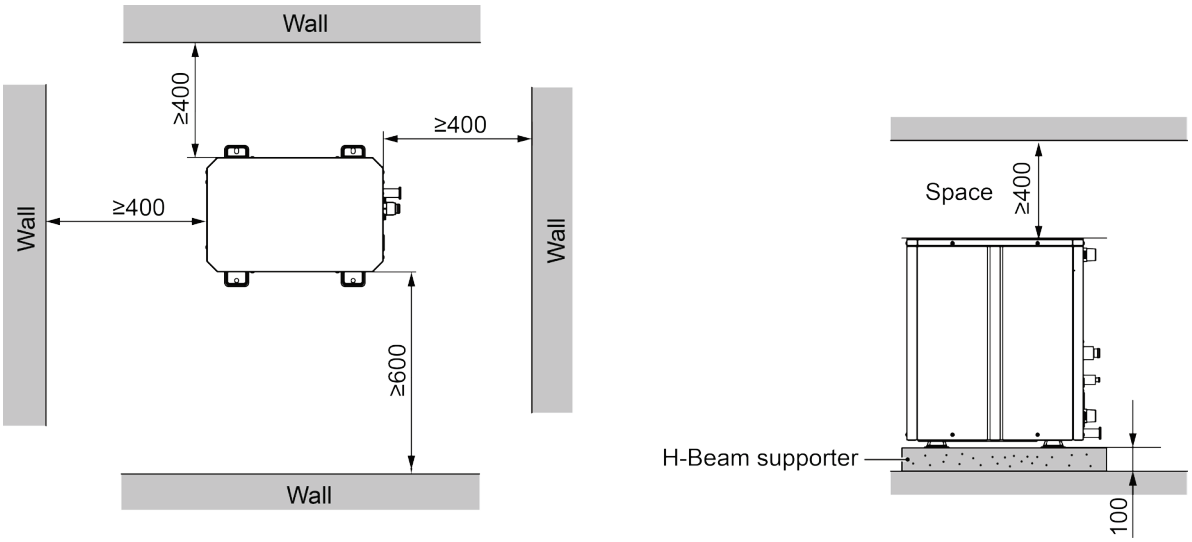

Fig.3.1

3.3 Requirements of Communication Wire Selection

NOTES!

If air conditioner used under strong electronic-magnetic interference circumstance, STP (shielded twisted pair) communication cable must be adopted.

3.3.1 Selection of Communication Wire between Hydro Box and Wired Controller

Material type	Total length of communication line between indoor unit and wired controller L (m)	Wire size (mm^2)	Material Standard	Remarks
Light/Ordinary polyvinyl chloride sheathed cord. (60227 IEC 52 /60227 IEC 53)	L≤250	2×0.75~2×1.25	IEC 60227-5	1. Total length of communication line can't exceed 250m. 2. The cord shall be Circular cord (the cores shall be twisted together). 3. If unit is installed in places with intense magnetic field or strong interference, it is necessary to use shielded wire.

3.3.2 Selection of Communication Wire between Hydro Box and Mode Exchange Box

Material Type	Total Length L (m) of Communication Cable between Indoor Unit and Indoor (Outdoor) Unit	Wire size (mm^2)	Material Standard	Remarks
Light/Ordinary polyvinyl chloride sheathed cord. (60227 IEC 52 /60227 IEC 53)	L≤1000	≥2×0.75	IEC 60227-5	1. If the wire diameter is enlarged to 2×1mm^2, the total communication line length can reach 1500m. 2. The cord shall be Circular cord (the cores shall be twisted together). 3. If unit is installed in places with intense magnetic field or strong interference, it is necessary to use shielded wire.

3.4 Requirements for Electrical Wiring

(1) The hydro box belongs to Category I Electric Appliance. Therefore, be sure to take reliable earthed measures. The earthed wire shall be connected to the special earthed device on the construction. The installation must be done by specialist technicians.

(2) The fixed circuit must be provided with leakage protection switch and air switch that have enough capacity.

(3) The power supply must comply with the ratings on nameplate, while the special circuit for air conditioner must be used.

(4) The diameter of power cables shall be big enough. Please select the power cables in reference to the specifications below.

(5) Carry out installation according to national wiring rules.

(6) Do not pull the power cables with force.

Model	Type of power supply	Min. sectional area of power cable			
		Live wire(mm^2)	Neutral wire(mm^2)	Earthed wire(mm^2)	Air switch capacity(A)
NRQR16L/A-T	220~240V-1ph-50Hz 208~230V-1ph-60Hz	1.5	1.5	1.5	6
NRQR30L/A-T	220~240V-1ph-50Hz 208~230V-1ph-60Hz	1.5	1.5	1.5	6

NOTES!

① The power cable must be copper-core cable, and its working temperature shall not be higher than the specified value.

② If the power cable is longer than 15m, please increase its sectional area appropriately, thus to avoid overloading.

③ The power cable specification refers to the specification of BV single-cord cable (2~4 cords) laid when inserting the plastic pipe and selected the working environment temperature is 40°C. The air switch is used for a temperature of 40°C and it shall be “D” type.

④ All electrical installation must be performed by qualified technicians in accordance with local laws, regulations and the corresponding instruction manual.

⑤ In case of any change to the site installation conditions, please appropriately reduce the capacity according to the power cables and air switch specifications provided by the manufacturer.

4 Unit Installation

4.1 Notices

Please read the following notices carefully before installation and debugging!

(1) The hydro box is only applicable for closed-type water system. Open-type system, such as water tank without coil, cannot use this hydro box. It shall be installed indoors with ambient temperature from 4°C~35°C. Prohibit installing the hydro box outdoors, otherwise malfunction will be caused.

(2) If you put the unit out of use for a long period, please make sure to drain the water thoroughly out of the hydro box, water tank and floor heating pipe, in order to prevent the system from freezing. During installation, please add water discharge valve at the inlet and outlet water pipe of hydro box in order to drain the water thoroughly and prevent the system from freezing.

(3) Before energizing, please check if the DIP switch of main board S2 is in accordance with the actual status of connected device. If it is not in accordance, the reliability of unit will be affected and temperature sensor error will be reported.

(4) When the supplementary water pressure is bigger than 3bar, please add relief valve at the supplementary water port. Make sure the system water pressure is not bigger than 3bar. Otherwise, the relief valve will open and cause water leakage.

(5) The wired control can control floor heating. Detailed setting and operation please refer to

the instruction manuals of hydro box and wired controller.

(6) When the hydro box is connected with the water tank, please connect the circulating water outlet of hydro box and circulating water inlet of water tank with the circulating water inlet of hydro box and circulating water outlet of water tank. Detailed installation please refer to the instruction manual of hydro box.

(7) When the hydro box is to be connected with floor heating system or water tank, please install waterway solenoid valve C and solenoid valve D according to the unit installation diagram, for controlling the water tank and floor water way heating. For valve C and valve D, please select straight solenoid water valve with small resistance(valve C and valve D aren't included in NRQR16L/A-T and NRQR30L/A-T，please purchase in market). Meanwhile, valve C, valve D and floor heating performer shall select closed-type.

(8) When the system is connected with floor heating, its waterway system and water tank water belong to different waterway system. Therefore, tap water filling port and discharge port shall be set.

(9) Constructor shall add water return pump according to actual requirements to ensure the water pipe water temperature at user side and avoid waste during use.

(10) The waterway pipeline can be installed only after fixing the hydro box. Do not let duct and other foreign objects getting into the pipeline system during installing the connection pipe.

(11) After connection of all water pipes, firstly check them for leakage. If ensuring no leakage, carry out thermal insulation to all pipe systems. Take care on thermal insulation at the connection of valves and pipe fittings. It is recommended to use thermal insulation cotton not less than 15mm thick.

(12) The thermal insulation pressure water tank is supplied of hot water based on tap water pressure. The user can have hot water only when there is tap water. During use, the cutoff valve at the cold water inlet of water tank shall be kept normally open.

(13) The horizontal distance between hydro box and thermal insulation water tank shall not exceed 5m, and the vertical fall shall not exceed 3m. If exceeds the above limitation, please contact with us.

(14) Prepare materials according to connector size and specification above. If the cutoff valve is installed outdoors, it is recommended to use PPR fittings, thus to avoid freezing under low temperature.

(15) When the system is connected with ground for floor heating, please add the pressure difference by-pass valve between water separator and water collector.

(16) For the installation instructions of floor heating engineering pump and solar power pump, please refer to the wiring diagram. If the supply cord is damaged, it must be replaced by the manufacturer, its service agent or similarly qualified persons in order to avoid a hazard.

(17) The appliance shall be installed in accordance with national wiring regulations.

4.2 Product Installation

4.2.1 Installation of Hydro Box

4.2.1.1 Outline Dimension and Installation Spots

Unit: mm

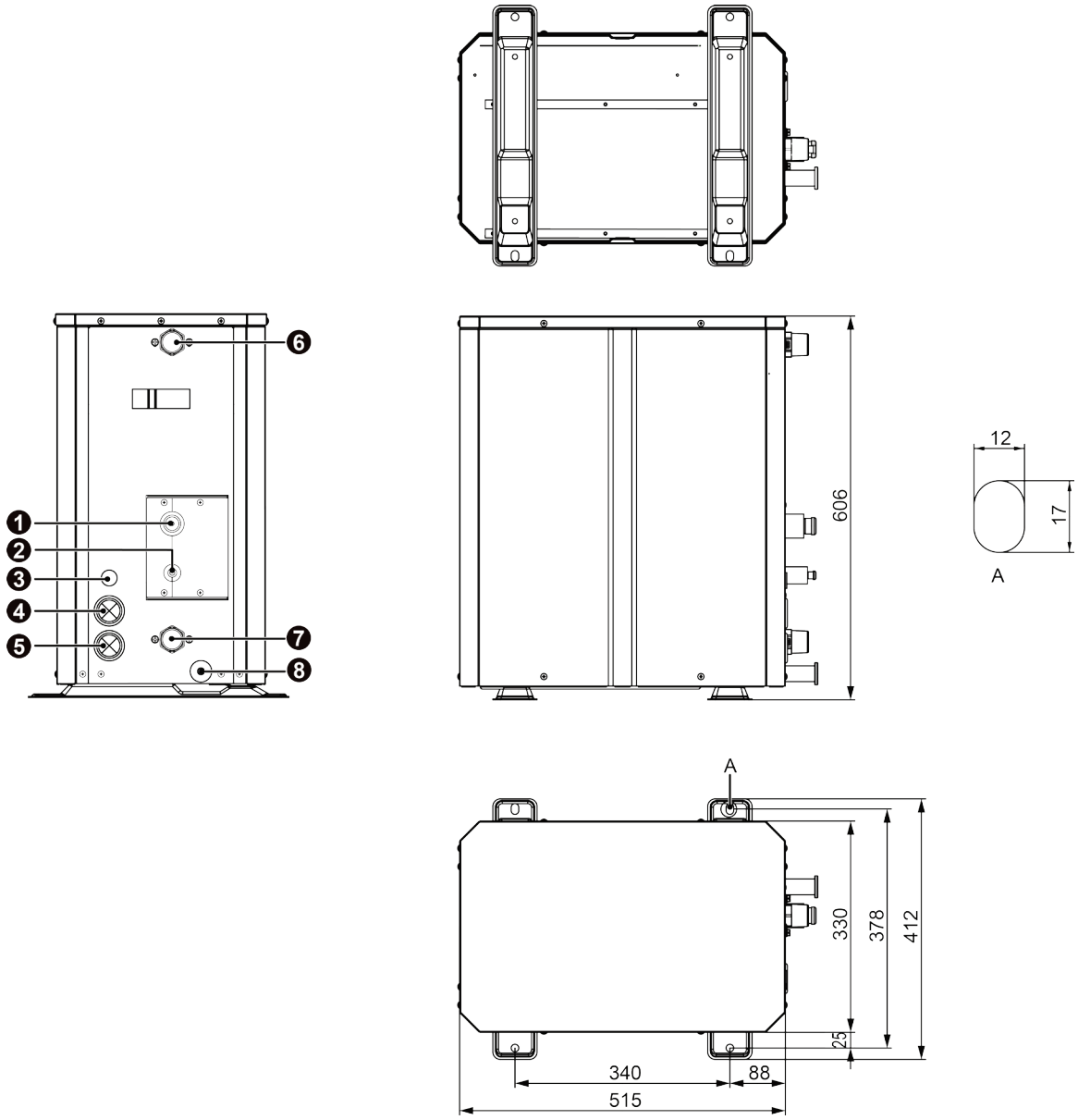

Fig.4.1

No.	Name	Pipe diameter(mm)	
		NRQR16L/A-T	NRQR30L/A-T
❶	Gas pipe	Φ15.9	Φ22.2
❷	Liquid pipe	Φ9.52	Φ9.52
❸	Wiring passing hole	Φ15	Φ15
❹	Wiring passing hole	Φ35	Φ35
❺	Wiring passing hole	Φ35	Φ35
❻	Water outlet	Φ25	Φ25
❼	Water inlet	Φ25	Φ25
❽	Drainage pipe	Φ25	Φ25

4.2.1.2 Main body installation

Screw hole drilling and bolt installation

(1) First of all, select a proper installation position that complies with the installation space requirement; then drill 4 holes on the installation base according to the anchors of the hydro box, as shown below; please refer to the dimension of the expansion bolts for the size of the holes. (The accompanied expansion bolts are M8 bolts, so the holes should be Φ10mm in dimension.) The holes should be 45~50mm deep.

Unit: mm

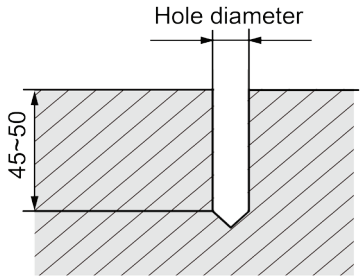

Fig.4.2

(2) Fix the 4 expansion bolts (supplied with the unit) into the holes and twist off the nuts and washers of the bolts.

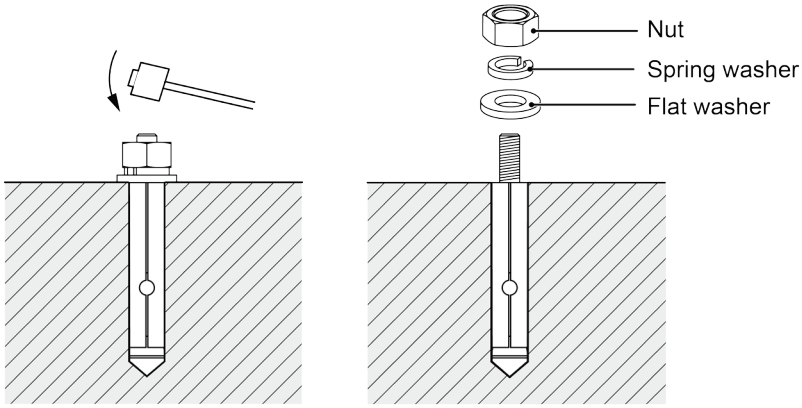

Fig.4.3

(3) Install the hydro box by aligning it to the bolts. Then tighten up the nuts to complete the installation.

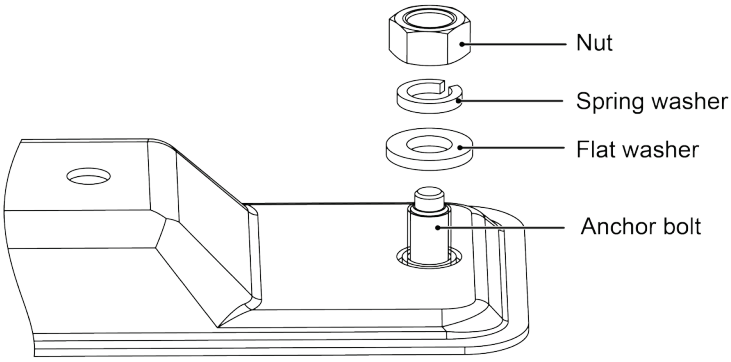

Fig.4.4

4.2.2 Refrigerant Pipe Connection

4.2.2.1 Pipeline Requirement

Pipe specification is shown as follows:

R410A Refrigerant System		
External diameter (mm)	Thickness (mm)	Type
Φ6.35	≥0.8	O
Φ9.52	≥0.8	O
Φ12.7	≥0.8	O
Φ15.9	≥1.0	O
Φ19.05	≥1.0	1/2H
Φ22.2	≥1.2	1/2H

4.2.2.2 Refrigerant Pipe Connection between Hydro box and Mode Exchange Box

(1) Refrigerant pipe connection between 16 kW hydro box and mode exchange box

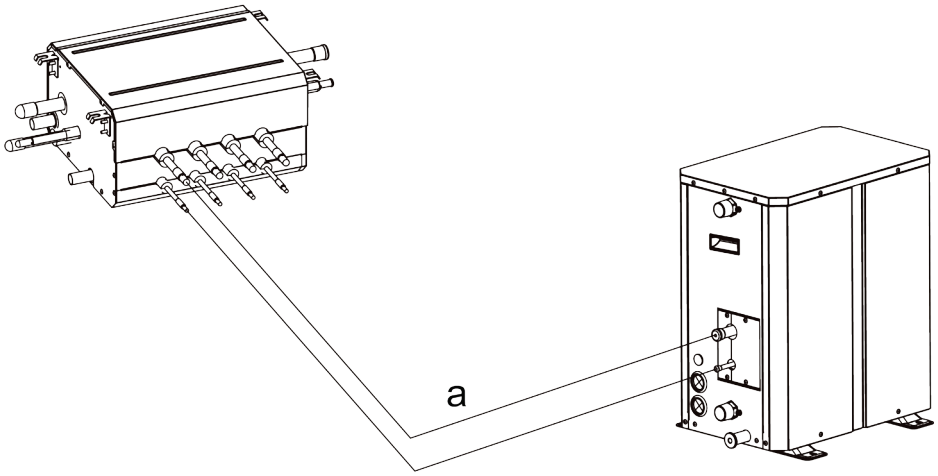

Fig.4.5

(2) Refrigerant pipe connection between 30 kW hydro box and mode exchange box

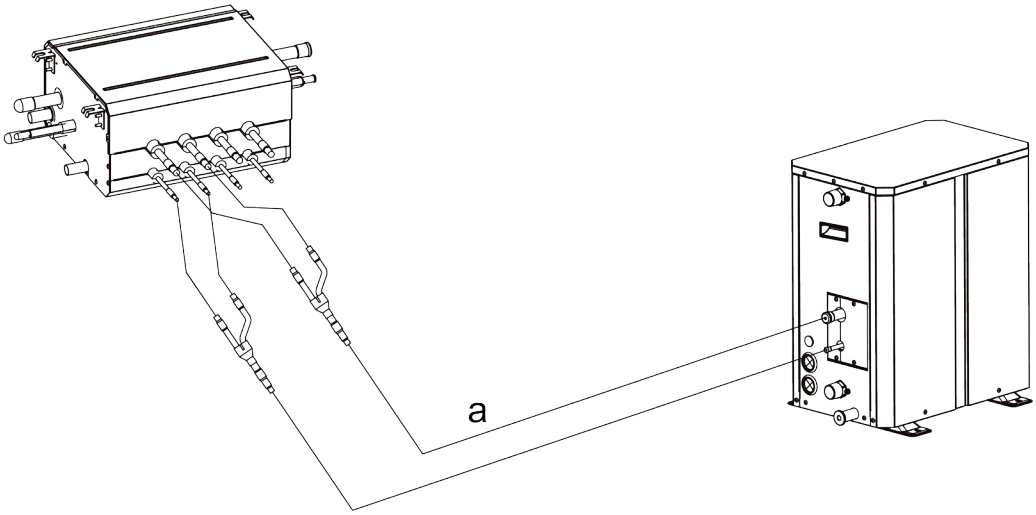

Fig.4.6

NOTES!

① Refrigerant pipe length between mode exchange box and hydro box a≤10m.

② When 2 mode exchange branches are connected in parallel with a 30kW hydro box, two adjacent branches must be selected;

③ Please refer to the manual of mode exchange for branch linkage setting and communication line setting.

4.2.2.3 Selection of branches between mode exchange downstream and hydro box

R410A Refrigerant System	Total capacity of downstream Hydro box X(kW)	Model
Y-type Manifold	<22.4	-
	22.4≤X≤30.0	FQ01B/A

4.2.2.4 Pipe Welding

(1) Prepare the inlet/outlet field piping just in front of the connection (do not braze yet).

(2) Unscrew 4 screws on plates, removing 2 plates of refrigerant pipe.

(3) Remove 2 pieces insulated cotton from the gas pipe and liquid pipe.

(4) Braze the field piping.

NOTES!

① Make sure there is nitrogen protection during welding: Brazing without carrying out nitrogen replacement or releasing nitrogen into the piping will create large quantities of oxidized film on the inside of the pipes, adversely affecting valves and compressors in the refrigerating system and preventing normal operation.

② When brazing while inserting nitrogen into the piping, nitrogen must be set to 0.02 MPa with a pressure-reducing valve (just enough so that it can be felt on the skin).

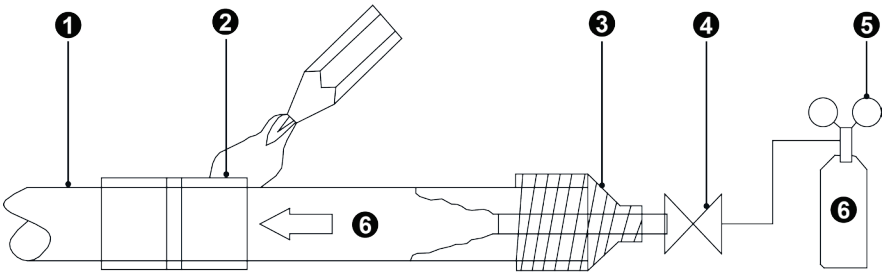

❶ Refrigerant piping
❷ Part to be brazed
❸ Taping
❹ Hands valve
❺ Pressure-reducing valve
❻ Nitrogen

Fig.4.7

4.2.3 Drainage Pipe Installation

4.2.3.1 Notice for Installation of Drain Pipe

(1) It is not allowed to connect the condensate drain pipe into waste pipe or other pipelines which are likely to produce corrosive or peculiar smell to prevent the smell from entering indoors or corrupt the unit.

(2) It is not allowed to connect the condensate drain pipe into rain pipe to prevent rain water from pouring in and cause property loss or personal injury.

(3) Condensate drain pipe should be connected into special drain system for air conditioner.

(4) The drainage pipe should be short and the gradient downwards should be at least 1%~2% in order to drain condensation water smoothly.

(5) The diameter of drainage hose should be bigger or equal to the diameter of drainage pipe joint.

(6) Install drainage pipe according to the following figure and arrange insulation to the drainage pipe. Improper installation may lead to water leakage and damp the furniture and other things in the room.

(7) You can buy normal hard PVC pipe used as the drainage pipe. During connection, insert the end of PVC pipe into the drainage hole and then tighten it with drainage hole and wire binder. Can’t connect the drainage hole and drainage hole with glue.

(8) When the drainage pipelines are used for several units, the position of pipeline should be about 100mm lower than the drainage port of each unit. In this case, thicker pipes should be applied.

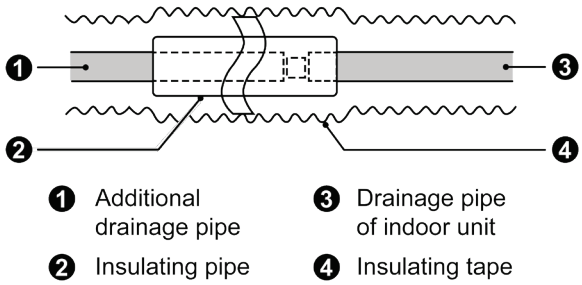

Fig.4.8

4.2.3.2 Drain Pipe Installation

(1) Drainage pipe should have the same diameter or larger diameter than the connecting pipes (PVC pipe, outside diameter 25mm, thickness≥1.5mm).

(2) Keep drainage pipe short and sloping downwards at a gradient of at least 1% for preventing forming air bubbles.

(3) Insert the drainage hose into drain socket, tighten the metal clamp securely.

(4) Install drainage pipe according to the following figure.

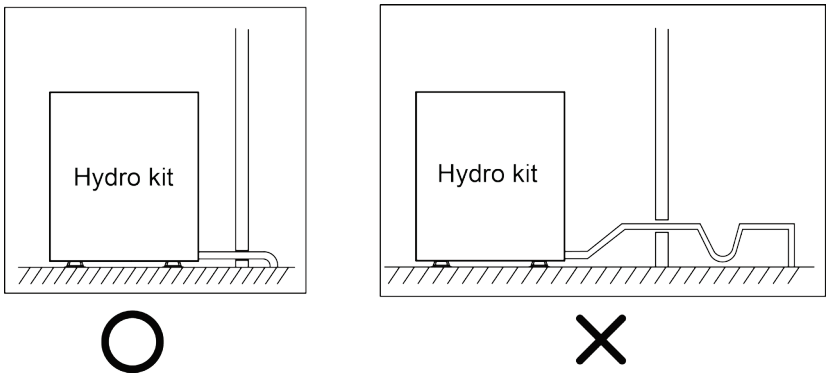

Fig.4.9

4.2.4 Connection of Hot Water System Pipes

Preparation of pipe: Hot water pipe must be used for circulating water inlet and outlet pipe. The PPR pipe with a nominal outer diameter of DN25 is recommended, while S2.5 series (wall thickness of 4.2mm) shall be used. Hot water pipe must be used for the cold water inlet pipe and hot water outlet pipe on water tank. The PPR pipe with a nominal outer diameter of DN20 is recommended, while S2.5 series (wall thickness of 3.4mm) shall be used. If using other similar insulation pipes, please select in reference to the outer diameter and wall thickness above.

Installation of circulating inlet / outlet pipe: The water inlet of the main unit is connected to the circulating outlet from water tank, while the outlet of the main unit is connected to the circulating inlet from water tank. The included manual discharge valve A must be installed beside the water inlet of main unit in a higher position and make sure the exhaust port vertically upward. The included manual discharge valve B must be installed beside the circulating inlet of water tank in the lowest position and make sure the discharge port vertically downward. If possible, the manual discharge valve B must be installed at a position easy for the user to operate.

Installation of water tank inlet / outlet pipe: The inlet pipe must be installed with check valve (Take care on the direction when installing the check valve, with the arrow "→" pointing toward the water tank), filter and cutoff valve, while the installing sequence must be identical to the installation schematics. The outlet pipe must be installed with one cutoff valve at least.

Installation of bottom sewage pipe to water tank: Use PPR pipe to connect the sewage port to the ground drain. One cutoff valve must be installed in the sewage pipe, while it must be installed at a position easy for the user to operate.

After connection of all water pipes, firstly check them for leakage (For leakage detection, please see the debugging of complete unit). If ensuring no leakage, carry out thermal insulation to all pipe systems. Take care on thermal insulation at the connection of valves and pipe fittings. It is recommended to use thermal insulation cotton not less than 15mm thick. After wrapping the thermal insulation cotton, use the included strap to bundle the water pipe, water temperature sensor and cables properly.

(1) Installation diagram of hydro box connected with water tank:

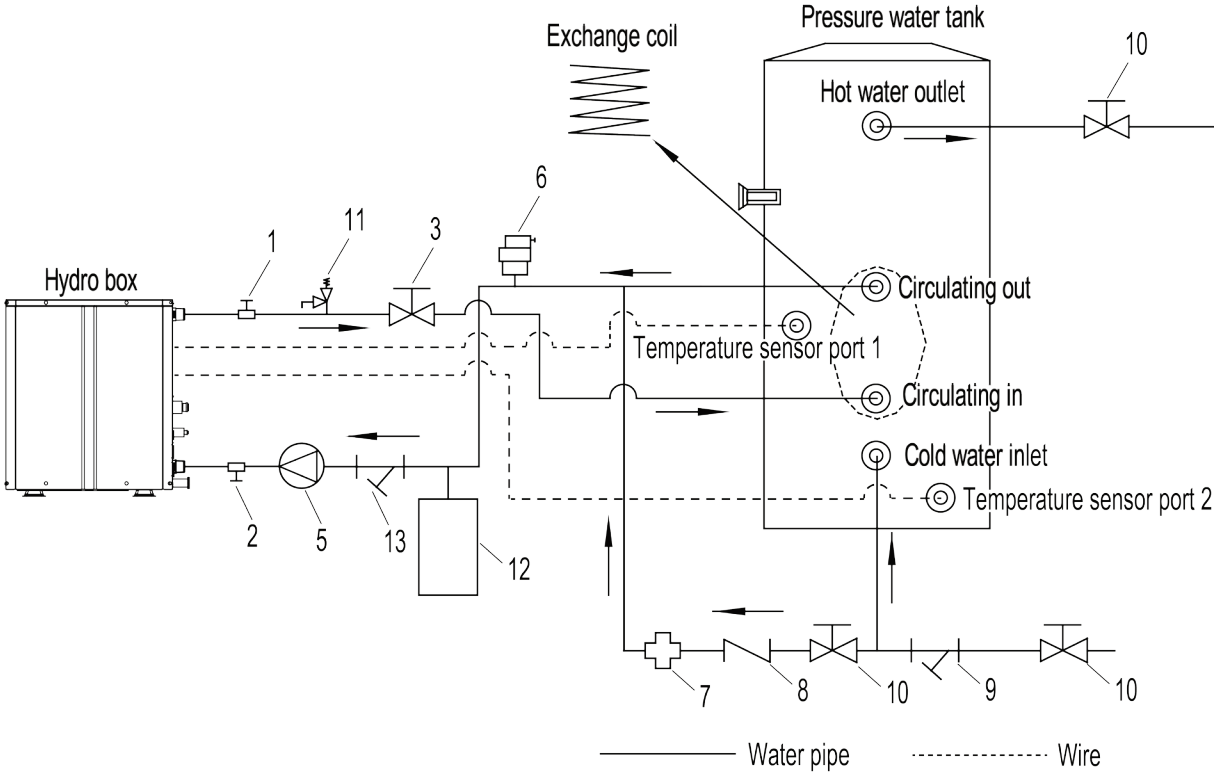

Fig.4.10

NOTES!

① Hydro box is only equipped with lower temperature sensor and water tank is equipped with upper temperature sensor.

② Water temperature sensor is introduced to the hydro box from water tank temperature sensor port 1 to connect with the upper water temperature sensor.

③ Lower water temperature sensor connects with the lower water temperature sensor position of water tank from hydro box.

④ Upper water temperature sensor adopts air connection to connect with temperature sensor port 1 of water tank.

⑤ If adopts the water tank with single temperature sensor, you only need to connect the upper temperature sensor of water tank with the temperature sensor port of water tank.

(2) Installation diagram of hydro box connected with floor heating:

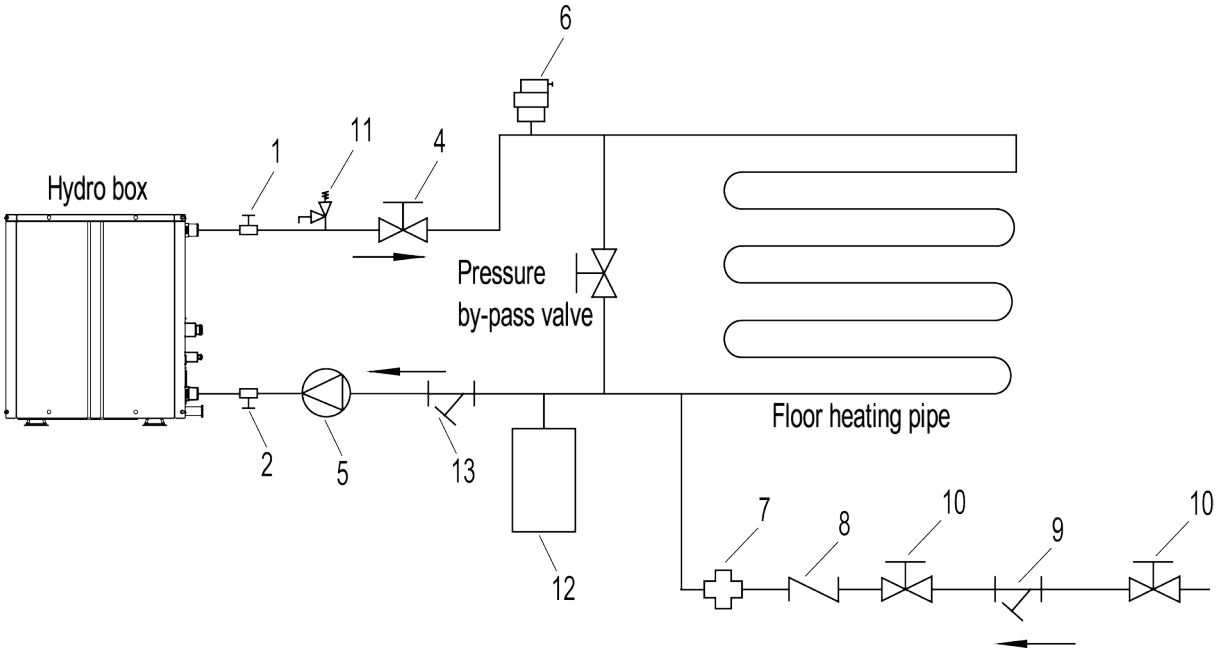

Fig.4.11

(3) Installation diagram of connecting hydro box with water tank and floor heating simultaneously:

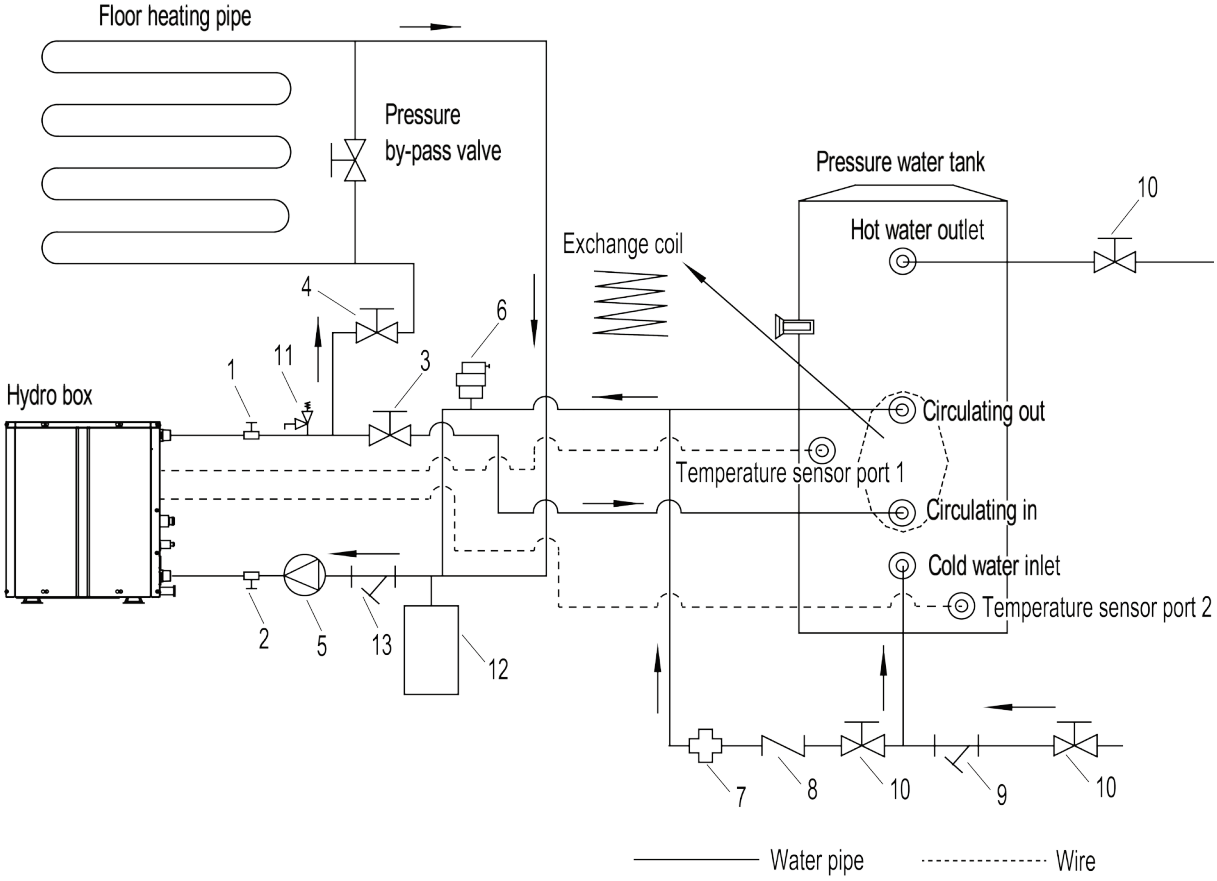

Fig.4.12

No.	Part's name	Photo	Installation instruction	Purpose	Remark
1	Manual discharge valve A		It should be installed at the high position where is close to the hydro box. The discharge outlet should be upright and face upwards.	Discharge air when debugging the water system.	Standard part
2	Manual discharge valve B		It should be installed at the low position where is close to the hydro box. The discharge outlet should be upright and face downwards.	Discharge the water inside the pipeline during power off period or when maintaining the water system.	Standard part
3	C valve		It should be installed at the water outlet at the flow direction of floor heating hot pipe. Please connect wires according to wiring diagram.	Let the hot water flow into the coil pipe of water tank.	Optional part
4	D valve		It should be installed at the water outlet at the flow direction of floor heating hot pipe. Please connect wires according to wiring diagram.	Make the hot water flow to the floor heating hot pipe.	Optional part
5	Water pump (AC pump)		Select the suitable water pump according to the pressure drop of the water way and the water flow rate in the owner's manual.	Make sure there's enough water flow volume inside the floor heating hot pipe.	Optional part
6	Automatic discharge valve		The highest position of the closed-type water system	Discharge the air inside the system automatically for ensuring excellent heat exchange.	Standard part
7	Pressure-relief valve		It should be installed at the water replenishing outlet of closed-type water system. The water replenishing should be on the backwater way, as shown in the fig.	Make sure the water pressure inside the system is no more than 3bar. Otherwise, the safety valve inside the hydro box will open and it will cause water leakage.	Standard part
8	Check valve		It should be installed at the water replenishing outlet of the closed-type water system (close to the pressure-relief valve)	Prevent the water inside the closed-type water system flow backwards.	Optional part
9	Strainer		It should be installed at the water replenishing outlet of tap water	For filtrating the impurities in the replenishing water.	
10	Cut-off valve		The cut-off valve connected with the tap water should be kept open; Close the cut-off valve at the water replenishing outlet of closed-type water system after debugging.	It's used for maintenance.	
11	Safety valve		Install at water outlet side of the hydro box.	For pressure relief of the circulating water system.	Standard part

No.	Part's name	Photo	Installation instruction	Purpose	Remark
12	Expansion tank		Install at water inlet side of the hydro box.	To prevent pipe cracks caused by water thermal expansion.	Optional part
13	Circulating water strainer		Install at inlet side of the water pump.	For filtrating the impurities in the circulating water	Standard part

NOTES!

① All components above table in the picture must be installed and add cut-off valve according to actual project circumstances.

② The horizontal distance between hydro box and thermal insulation water tank shall not exceed 5m. It is recommended to install the water tank at lower and install the hydro box at upper.

Unit: mm

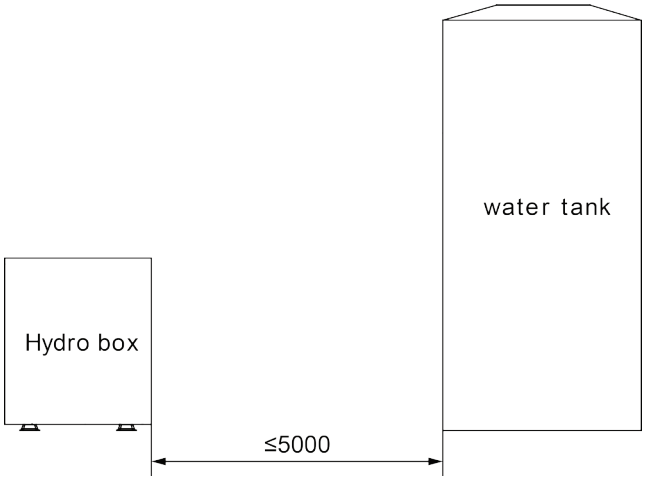

Fig.4.13

③ If the total waterpower loss between floor heating pipeline and valves exceeds 6m, please add floor heating engineering pump behind the solenoid valve D. There is control interface reserved in the electric box of hydro box. Please connect wire according to the wiring diagram on the electric box.

④ Prepare materials according to connector size and specification above. If the cutoff valve is installed outdoors, it is recommended to use PPR fittings, thus to avoid freezing under low temperature.

⑤ The hydro box shall be properly fixed before proceeding to installation of water pipes. During installation of the connection pipe, prevent the dust or other foreign articles from entering the pipe system.

⑥ The thermal insulation pressure water tank is supplied of hot water based on tap water pressure. The user can have hot water only when there is tap water.

⑦ During use, the cutoff valve at the cold water inlet of water tank shall be kept normally open.

⑧ If you put the unit out of use for a long period and cut off the power, please make sure to drain the water thoroughly out of the hydro box and floor heating pipe, in order to prevent the system from freezing. (For the method of discharging the circulating water inside the hydro box, please refer to section “Water discharge of hydro box”)

4.2.5 Requirements for Installation of Water System

(1) The cold water inlet of pressure water tank shall be connected to tap water pipe, and the hot water outlet shall be connected to the water terminal.

(2) The tap water inlet shall be connected with one-way valve, filter and relief valve.

(3) For easy repair, manual cutoff valve shall be installed at water inlet or outlet.

(4) Exhaust valve shall be installed at the highest position of water pipe.

(5) To avoid waiting too long when using hot water, please add hot water return line if the water terminals are dispersed and the water tank is far from such terminals.

(6) Please select an expansion tank of proper size according to the total water volume of the closed type circulating water system installed in the project and the relevant selection specifications of the expansion tank.

NOTES!

① The return water channel can be installed by referring to the following schematic Fig.4.14.

② One return water temperature sensor is provided in the packaged accessories. Connect the terminal of the temperature sensor to the main board AP1-CN49 of the control box during installation.

③ The control box of the hydro box only provides the control signal of the return water pump. Please make sure that the return water pump is powered by an external power source and connected to XT1-5 and XT1-6 of the control box wiring board through the relay.

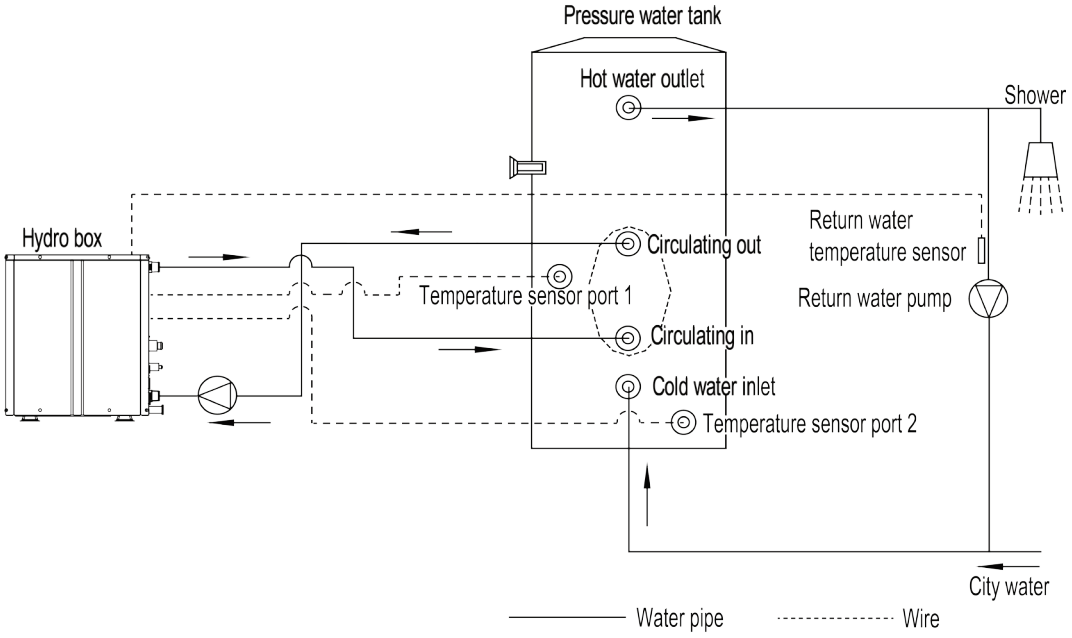

Fig.4.14

4.2.6 Installation of Water Tank

4.2.6.1 Installation of Water Tank

(1) The thermal insulation water tank shall be installed within a horizontal distance of 5m and a vertical fall of 3m to the hydro box. It can be installed indoors or outdoors, such as balcony, rooftop or floor.

(2) The vertical thermal insulation water tank must be placed upright, with the bottom on ground. The installing position must be firm and solid. To avoid shaking, the water tank must be fixed onto the wall with bolts. See below for details. The weight bearing capacity of the installing position must be considered when installing the water tank.

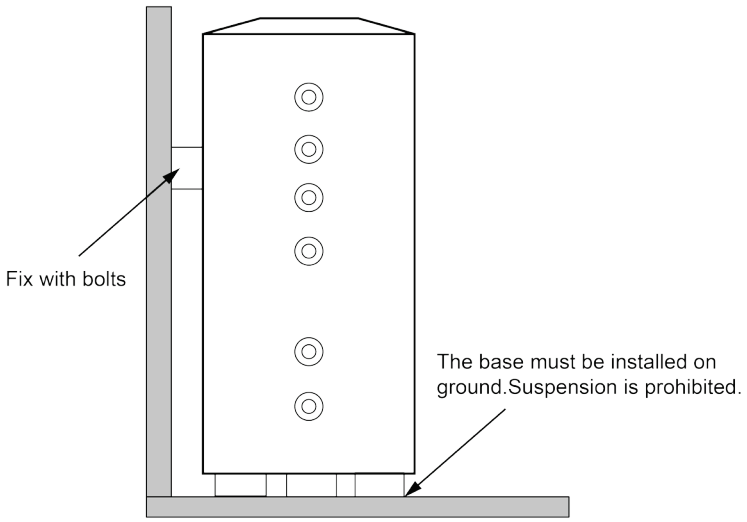

Fig.4.15

(3) For replenishing to water tank, supply of hot water and drainage of water tank, the tap water pipe, hot water connector and ground drain shall be available close to the thermal insulation water tank.

(4) Connection of inlet / outlet pipe: The included safety check valve (Take care that the "→" direction shall point toward the thermal insulation tank) shall be connected to the inlet of water tank by using PPR pipe and be sealed with adhesive tape, as shown below. Another end of the check valve shall be connected to the tap water. The hot water pipe shall be connected to the outlet of water tank by using PPR pipe.

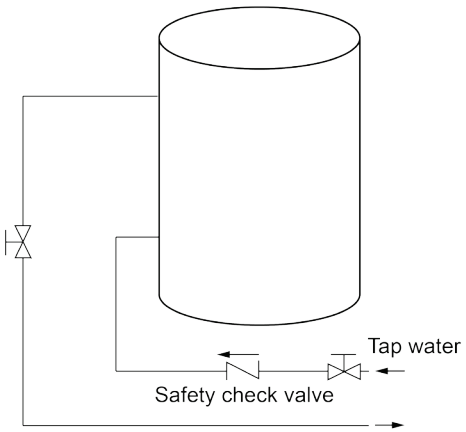

Fig.4.16

NOTE!

To ensure safety during use of water, the inlet and outlet of water tank must be connected with a specific length of PPR pipe. The length “L” is calculated as below: $L \geq 70 \times R^2$, in which “L” refers to pipe length (unit: cm) and R refers to the inner radius of the pipe (unit: cm). Thermal insulation shall be done and metal pipe shall not be used. For the first time of use, make sure that the water tank is filled with water before connecting to the power. The water tank shall not run without water.

4.2.6.2 Setting of Water Tank Capacity

The ex-factory defaulted water tank capacity is 300L. If the actual installed water tank capacity is smaller than 300L, setting is not needed. If the actual installed water tank capacity is bigger than 300L, please arrange setting as below.

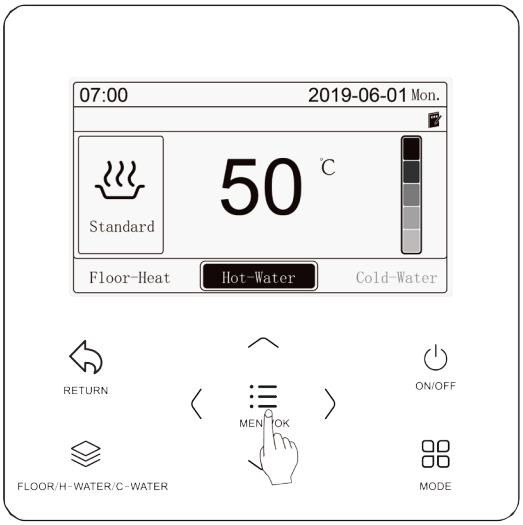

Step 1: Press “Menu/OK” button on homepage to enter menu.

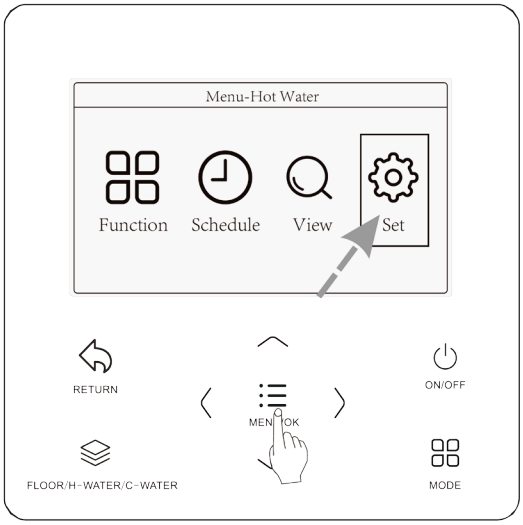

Step 2: select “Set” then pressing “Menu/OK” button again to enter “Project Setting” interface.

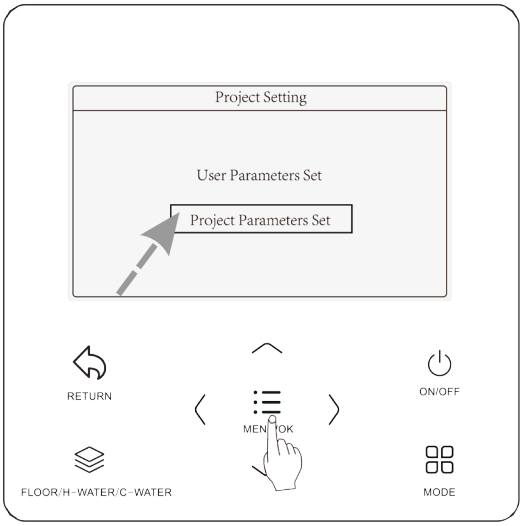

Step 3: Select “Project Parameters Set”, then press “Menu/OK” button to enter “Enter Password” interface.

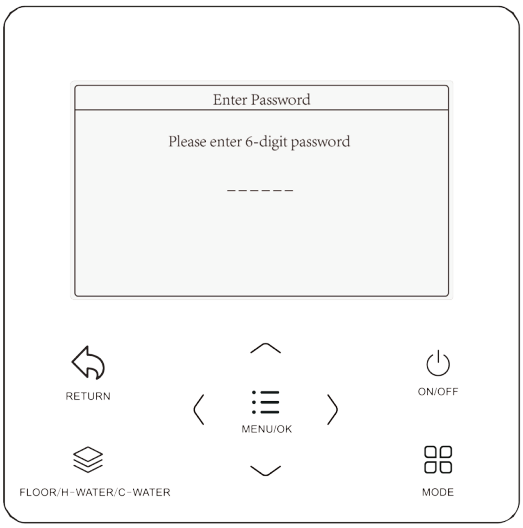

Step 4: Press “Up” or “Down” to adjust the value; Press “Left” or “Right” to switch password bit. And input “000000” to enter “Project Parameters Set” interface.

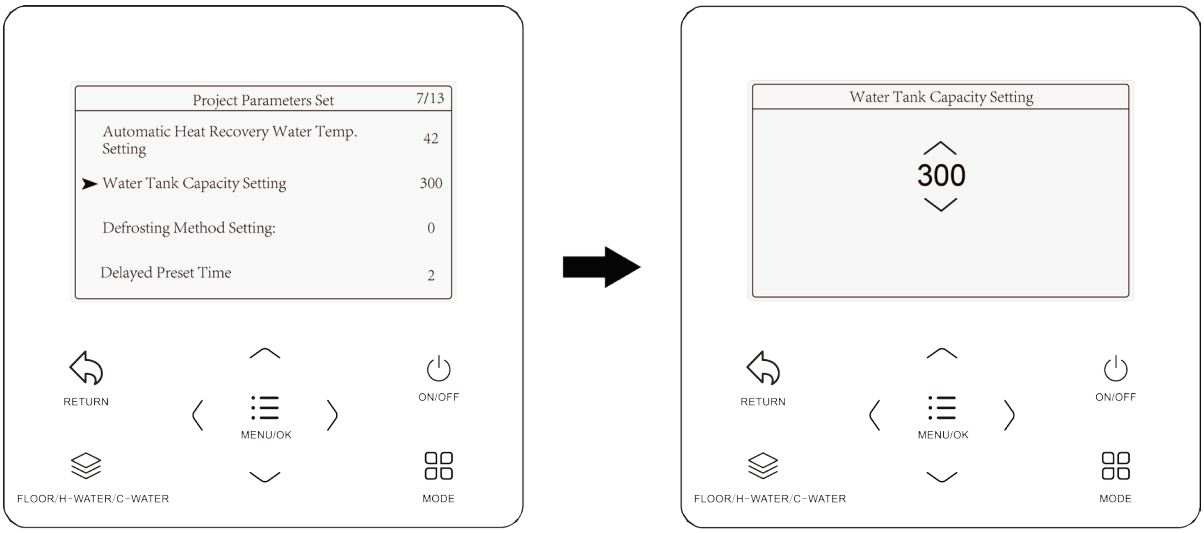

Step 5: Press “Up” or “Down” to find “Water Tank Capacity Setting”, then Press “Menu/OK” button to set the water tank capactity.

Step 6: Press “Up” or “Down” to adjust the value, then press “Menu/OK” button to save the value.

Fig.4.17

4.2.7 Anti-freezing measure

In countries where the inlet water temperature can be lower than 15℃, it’s necessary to use approved antifreeze in the circulating water to protect the water pipes. Please consult your hydro box supplier for a locally approved solution. Calculate the approximate volume of circulating water in the system. (The hydro box is not included.) Calculate the required amount of antifreeze according to the volume ratio recommended in the following table and add it to the circulating water.

Type of antifreeze	Minimum temperature for freeze protection				
	15℃~ -5℃	-10℃	-15℃	-20℃	-25℃
Ethylene glycol	12%	20%	30%	-	-
Propylene glycol	17%	25%	33%	-	-
Methanol	6%	12%	16%	24%	30%

NOTES!

① Use only one of the above antifreeze.

② If antifreeze is used, pressure drop and capability degradation of the system can occur.

③ If antifreeze is used, corrosion may occur to the circulating water pipes, so be sure to use corrosion inhibitors.

④ Please ensure that the antifreeze is used in accordance with local laws and regulations.

⑤ Antifreeze may be toxic and it is strictly forbidden to mix with domestic water.

⑥ If this hydro box is only used for making hot water, the anti-freeze liquid should be added only when the water-in temperature is less than 5℃.

4.3 Wiring Work

WARNING! Before obtaining access to terminals, all supply circuits must be disconnected.

NOTES!

① Units must be earthed securely, or it may cause electric shock.

② Please carefully read the wiring diagram before carry out the wiring work, incorrect wiring could cause malfunction or even damage the unit.

③ The unit should be powered by independent circuit and specific socket.

④ The wiring should be in accordance with related regulations in order to ensure the units reliable running.

⑤ Install circuit breaker for branch circuit according to related regulations and electrical standards.

⑥ Keep cable away from refrigerant pipes, compressor and fan motor.

⑦ The communication wires should be separated from power cord and connection wire between indoor unit and outdoor unit.

4.3.1 Connection of Wire and Patch Board Terminal

(1) The connection of wire (as shown in Fig.4.18)

1) Strip about 25mm insulation of the wire end by stripping and cutting tool.
2) Remove the wiring screws on the terminal board.
3) Shape the tail of wire into ring by needle nose plier, and keep the gauge of ring in accordance with screw.
4) Use the screwdriver for tightening the terminal.

(2) The connection of stranded wire (as shown in Fig.4.19)

1) Strip about 10mm insulation of the end of stranded wire by stripping and cutting tool.
2) Loosen the wiring screws on terminal board.
3) Insert the wire into the ring tongue terminal and tighten by crimping tool.
4) Use the screwdriver for tightening the terminal.

Unit: mm

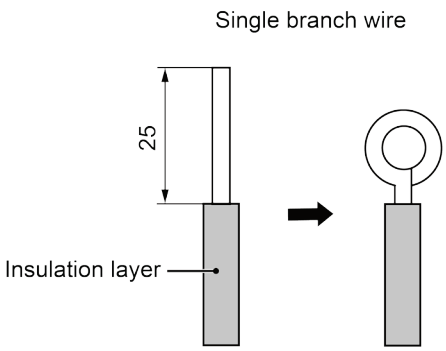

Fig.4.18

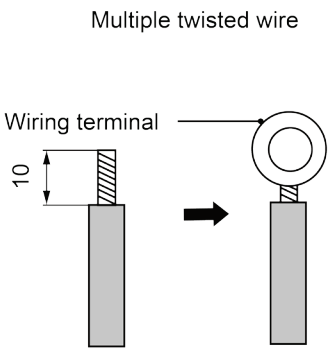

Fig.4.19

4.3.2 Power Cord Connection

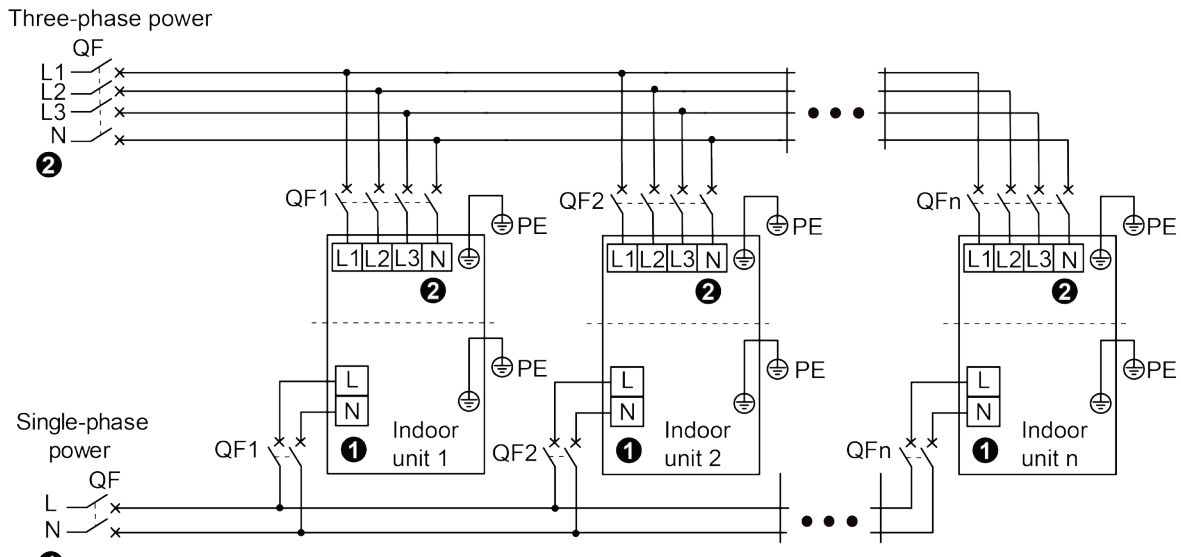

Note: (1) Connect wires for single-phase unit according to figure ❶ and connect wires for three-phase unit according to figure ❷.As for some areas where there's no neutral wire, please refer to the wiring diagram of unit for details.

(2) The maximum connection quantity "n" for indoor unit is decided by the capacity of outdoor unit. Please refer to the unit capacity of unit for details.

Fig.4.20

(1) Detach the electric box lid.

(2) Let the power cord pass through the wiring through-holes.

(3) Connect wires according to Fig. 4.20.

(4) Fix the power cord with wiring clamp.

NOTE!

The wiring diagram above is only for reference. Please refer to the one stuck inside the electric box.

4.3.3 Connection of Communication Wire between Hydro Box and Mode Exchange Box

(1) Detach the electric box lid of Hydro Box.

(2) Let the Communication cable pass through the wiring through-holes.

(3) Connect the communication wire to terminal D1 and D2 of Hydro Box 4-bit wiring board, as shown in Fig.4.21.

(4) Fix the communication cable with clamp of electric box.

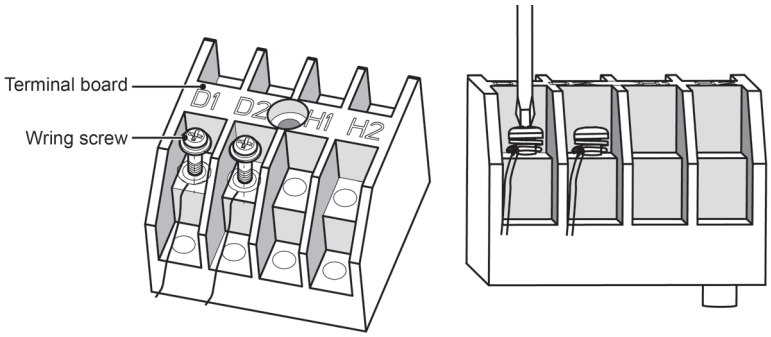

Fig.4.21

4.3.4 Connection of Communication Wire for Wired Controller

(1) Detach the electric box lid of Hydro Box.

(2) Let the Communication cable pass through the wiring through-holes.

(3) Connect the communication wire to terminal H1 and H2 of Hydro Box 4-bit wiring board.

(4) Fix the communication cable with clamp of electric box.

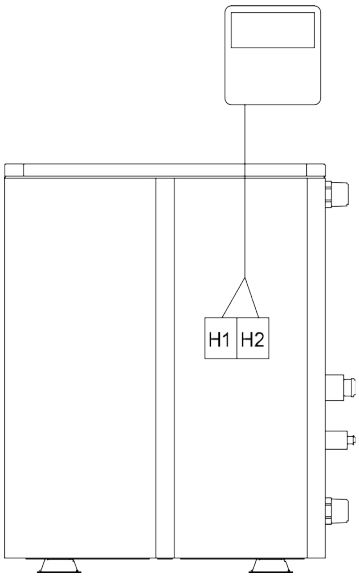

Fig.4.22

4.3.5 Instructions on Connecting Wired Controller and Indoor Units Network

(1) Communication wire of mode exchange and outdoor unit is connected to D1, D2. Communication wire of mode exchange and hydro box is connected to nD1, nD2. (N represents branch number, which could be one to eight.)

(2) Wired controller is connected to H1, H2.

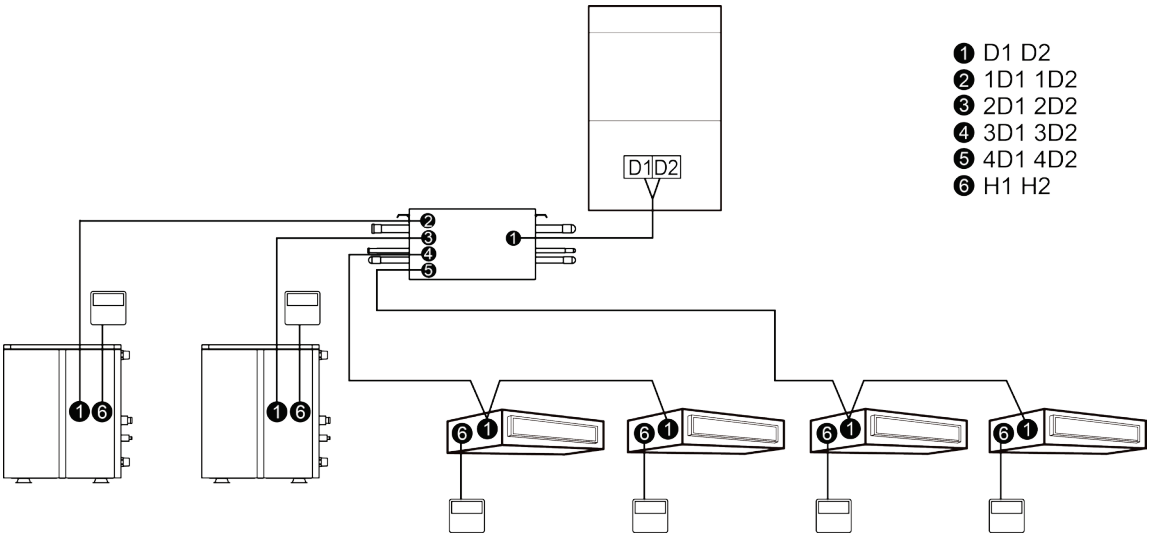

Fig.4.23

4.4 Confirm DIP Switch of Main Board

Confirm the S1 and S2 DIP switch on the main board of hydro box. S1 DIP means capacity DIP switch. S2 DIP means function DIP.

4.4.1 Capacity DIP(S1) of Hydro Box

Capacity DIP switch S1 is 5 bit. Please do not change it.

Capacity of hydro box(kW)	Capacity DIP switch				
	1	2	3	4	5
16	ON	OFF	OFF	ON	OFF
30	OFF	ON	OFF	ON	OFF

NOTES!

① DIP switch shall be set correctly and cannot be set in the middle position. When the switch is set to “ON”, it means “0”; when the switch is set to the number side, it means “1”.

Example: S1 of 16kW hydro box is as shown in the following figure:

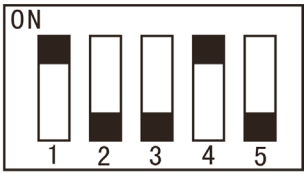

Fig.4.24

② The black part is the bar for setting DIP.

4.4.2 Function DIP(S2) of Hydro Box

Function DIP switch S2 is 4 bit. “1”, “2”, and “3” stand for “Water tank”, “Floor heating” and “Solar power” respectively. Each function DIP is as below: Setting to “number” means this function is connected; setting to “ON” means this function is not connected. “1” , “2” and “3” must be set according to the actual status of project. “4” cannot be changed. Otherwise, the unit may occur temperature sensor malfunction or cannot operate.

DIP sequence	Meaning	DIP		Ex-factory setting
		Not connected	Connected	
1	Water tank	ON	OFF	OFF
2	Floor heating	ON	OFF	OFF
3	Solar power	ON	OFF	ON
4	NULL	ON	OFF	ON

Example: S2 is as shown in the following figure:

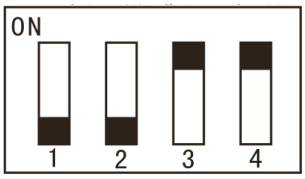

Fig.4.25

NOTES!

① The black part is the bar for setting DIP.

② Please set the DIP according to the actual status of project.

③ If you want to use the solar function, please consult the manufacturer.

4.5 Engineering Accessories Selection and Installation

4.5.1 Circle Pump (AC Pump) Installation

4.5.1.1 Circle Pump (AC Pump) Selection

Select the suitable circle pump according to the pressure drop of the water way and the flow rate in the following table.

Model		NRQR16L/A-T	NRQR30L/A-T
Rated Water Flow	L/min	46	86

4.5.1.2 Circle Pump (AC Pump) Wiring

(1) Select a suitable relay.

(2) Connect the wires of the relay to the terminal block XT1-3 and XT1-4 respectively.

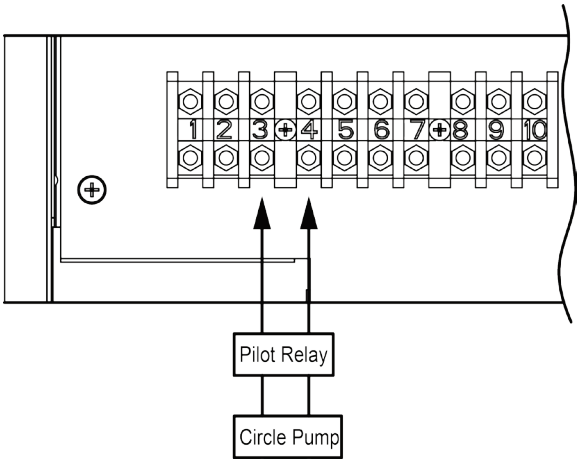

Fig.4.26

NOTE!

Make sure to supply external power with the circle pump.

4.5.2 2Way Valve Installation

4.5.2.1 2Way Valve Selection

Hydro box supports following 2way valve.

Type	Power	Wires	Supported
Normal Closed	220~240V-1ph-50Hz 208~230V-1ph-60Hz	3-wire	Yes
	220~240V-1ph-50Hz 208~230V-1ph-60Hz	2-wire	Yes

4.5.2.2 2Way Valve Wiring

It needs one and more 2way valves while installing hydro box. The usage of the 2way valve is shown as the following table.

Name	Usage
Vavle C	Control the waterway on/off for domestic hot water
Vavle D	Control the waterway on/off for floor heating

The wiring of 2-wire or 3-wire 2way valve refers to the wiring diagram posted inside the cover

of the electrical box.

4.6 Test Run

4.6.1 Preparations for Test Run

(1) Check if the unit is installed correctly.
(2) Check if water system pipes and electric system wires are reasonable.
(3) Check if the circulating water pipe is thermally insulated.
(4) Check if the earthed wires are connected.
(5) Check if the supply voltage complies with the rated voltage of unit.
(6) Check if the check valve and relief valve at the water inlet are installed correctly.
(7) Check if the air in the water system pipes are thoroughly discharged, and if the vent valve and sewage valve are closed.
(8) The pressure of inlet water shall be not less than 0.15MPa.

4.6.2 Water Pipeline Debugging (leakage detection, air discharge)

4.6.2.1 Leakage Detection

After connecting all waterway pipeline, please arrange leakage detection firstly and then arrange insulation to waterway system after making sure there is no water leakage. Please pay special attention to the thermal insulation at the joints of valves and pipe joints. The insulation cotton with thickness not less than 15mm is recommended.

4.6.2.2 Filling Water for Exhausting Air between Hydro Box with Water Tank and Floor Heating Pipe

(1) Ensure that each water pipe is correctly connected, the exhaust valve on the user side is closed and the sewage port is sealed;
(2) Open the water filling valve to fill water. Open the exhaust valve;
(3) When there is water flown out from the exhaust valve, please open the manual exhaust valve;
(4) When it is completely water flowing out of the vent valve, energize the hydro box and enter cleaning mode to start exhausting. The operation method is that when the hydro box is off, pressing “Menu/OK” button to enter menu interface. Press “Up” or “Down” to find “Function” option, then press “Menu/OK” button to enter “Function Setting”. Select “Clean” and pressing “Menu/OK” button to start cleaning.
(5) After operating for 15~20min, if the water flow discharged by exhaust valve of hydro box outlet pipe is stable and there is no airflow, it means exhausting is done. In this case, you can close the manual exhaust valve and stop the operation of hydro box. Operation method: pressing “Menu/OK” button to enter menu interface. Press “Up” or “Down” to find “Function” option, then press “Menu/OK” button to enter “Function Setting”. Select “Clean” and pressing “Menu/OK” button to stop cleaning.

4.6.2.3 Air Exhausting of Water Tank and Pipeline at User Side

(1) Make sure each pipe port of water tank is connected and make sure the sewage port of water tank is sealed;

(2) Open the water filling valve of water tank and open the valve at user side to fill water into water tank until there is water flowed out from the valve at user side and there is no air bubble continuously, which means water filling and air exhausting of water tank have been done. Then you can close the valve at user side and enter operation debugging of the whole unit.

4.6.2.4 Second Time of Air Exhausting

After all connection wires of IDU, ODU and hydro box are connected and the debugging of refrigerant system is done, please arrange air exhausting again. Detailed steps are as below:

(1) Open the hot water faucet to discharge water and open the water filling valve of water tank to fill water into water tank until the water temperature reaches 20°C~30°C.

(2) Start hot water generation mode and open the manual exhaust valve at the same time;

After operating for 15~20min, if the difference between inlet water temperature and outlet water temperature of hydro box is smaller than 10°C, it means air exhausting is done. In this case, you can close the manual exhaust valve and stop the operation of hydro box. Air exhausting operation of water system is done.

(3) The steps mentioned above shall be done when water temperature in water tank is below 45°C. When the temperature reaches 45°C, if the difference between inlet water temperature and outlet water temperature of hydro box doesn't meet the requirement, please turn off the unit. Open the faucet to discharge hot water and tap water will enter water tank from the water filling valve of water tank, until water temperature in water tank reaches 20°C~30°C again. Then start hot water generation mode again and open the manual exhaust valve at the same time to exhaust air.

4.6.3 Capacity Setting of Water Tank

Capacity setting of water tank refer to 4.2.6.2.

4.6.4 Test Operation

Arrange test operation of hydro box and outdoor unit simultaneously. Please refer to the test operation instruction in the instruction manual of outdoor unit.

4.6.5 Water discharge of hydro box

(1) Use a screwdriver to unscrew the 9 screws of the top cover of the hydro box and the 4 screws at the bottom of the rear panel (the side panel without the GREE logo), and then remove the top cover and the rear panel.

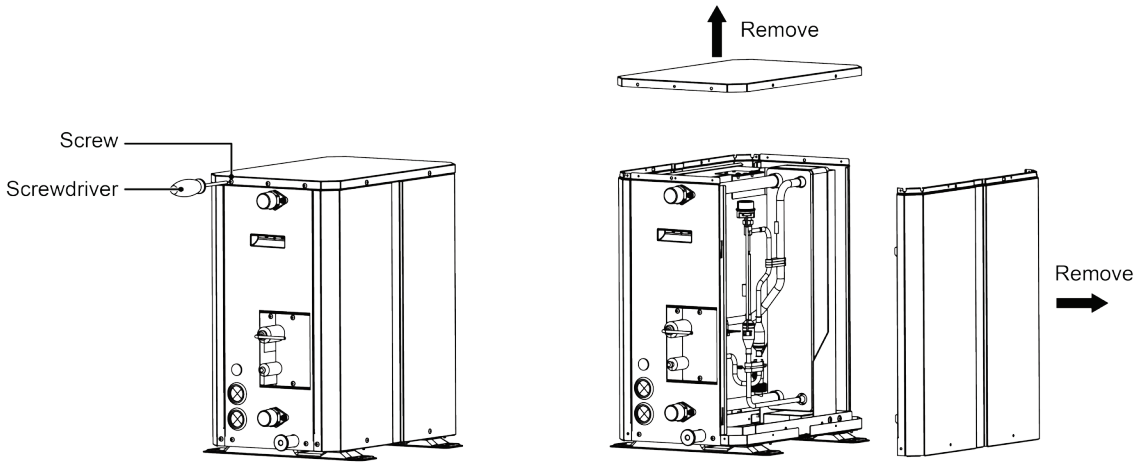

Fig.4.27

(2) Operate from the direction shown in the figure below. Loosen the drain valve and the exhaust valve installed on the outlet water pipe.

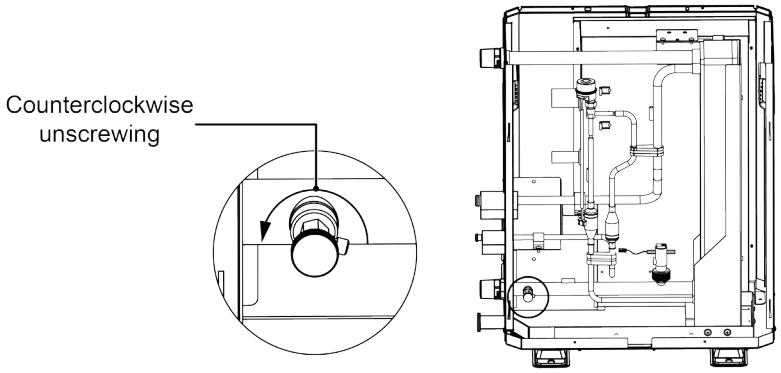

Fig.4.28

(3) Start draining and finish draining when no water comes out of the drain valve.

NOTES!

① Extra drain valve of external water pipe must be installing to ensure that the water in the whole circulating water system can be completely drained.

② Please open the discharge valve A and water discharge valve B connected to the outside of the hydro box at the same time when draining of hydro box.

5 Common Malfunction and Troubleshooting

5.1 Error Code of Hydro Box

Error code	Content	Error code	Content
L4	Power supply overcurrent protection	dd	Malfunction of solar power temperature sensor
L5	Freeze prevention protection	dH	PCB board of wired controller is abnormal
LJ	Function DIP switch setting error	dF	Malfunction of upper water temperature sensor inside the water tank
L8	Insufficient power supply	dJ	Malfunction of return water temperature sensor
LL	Water flow switch error	dP	Malfunction of hydro box water inlet pipe temperature sensor
LE	EC DC pump rotation speed error	dU	Malfunction of hydro box water outlet pipe temperature sensor
d2	Water tank lower water temperature sensor error	dC	Setting of capacity DIP switch is abnormal
d4	Inlet pipe temperature sensor Error		
d6	Outlet pipe temperature sensor Error		

NOTE!

When the outdoor unit is incurred to fault, the wired controller of hydro box will not display the fault. When hydro box is incurred to fault, the wired controller of multi-split indoor unit will not display the fault. When the outdoor unit is incurred to fault, you may run the hot water generation temporally (Ensure that the hot water generation is started when there is water inside the water tank).

5.2 Troubleshooting

Malfunction phenomenon	Possible causes	Solution
No effluent water	The water is stopped or the water pressure is too low	Check
	The water pipe is blocked	
	The valve of water inlet pipe is not open	
The outlet is cold water, or the water is not hot enough	The water temperature setting is too low	Reset
	The wired controller is failed	Contact with the local maintenance center
	The heating time is too short	Continue to heat
The outlet water volume changes	The tap water pressure is unstable	Check
Freeze prevention protection	Risk of freezing, as the water temperature is too low	Maintain the energized or heating state for 30 minutes or longer to eliminate the freezing
After a period of operation, the wired controller reports error dU	1. There is air in the circulating water channel. It is not completely drained. 2. The water outlet temperature sensor falls off.	1. Filling Water for exhausting Air of the circulating water channel again 2. Check whether the temperature sensor on the outlet water pipe of the hydro box falls off. If yes, insert the temperature sensor back into the temperature sensor casing of the outlet water pipe.

5.3 After-sales Services

If there is quality problem or other problems for the product you purchased, please contact with the local after-sales service center.

Warranty must comply with the following conditions:

The first start-up of unit must be taken by the professionals of our after-sales service center or appointed company.

Only the spare parts provided by Gree can be used.

The unit operation and maintenance items specified in the manual shall be followed strictly.

If any of the conditions above is infringed, the warranty will become invalid automatically.

NOTE!

For detailed malfunction and maintenance, please refer to the service manual.

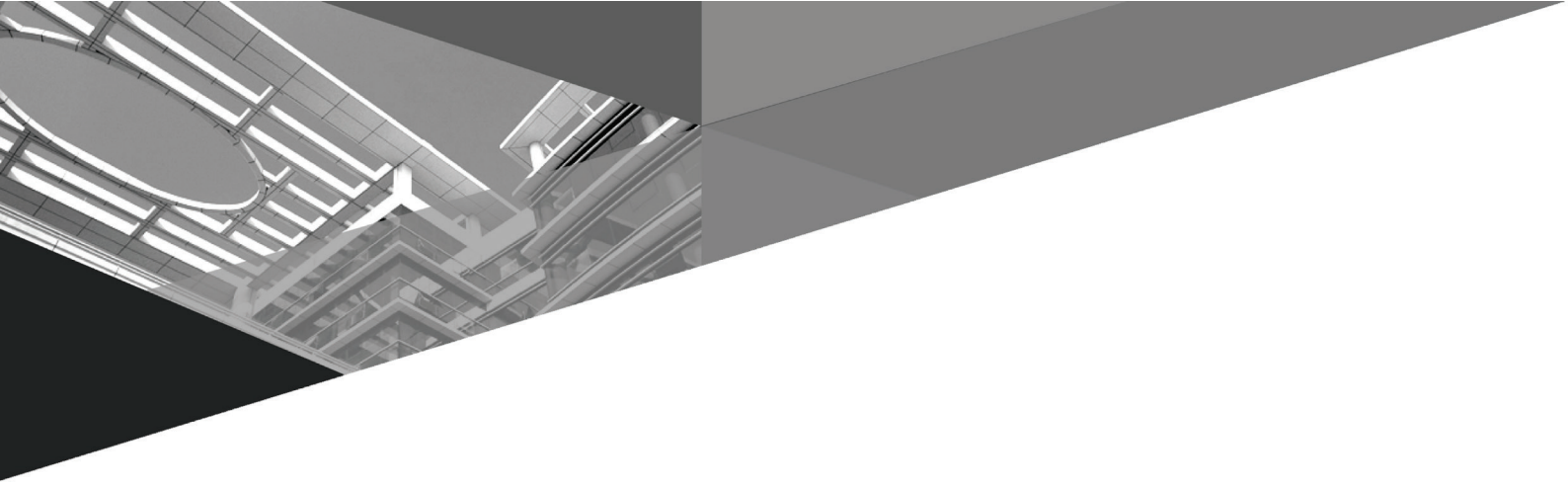

GREE ELECTRIC APPLIANCES, INC. OF ZHUHAI

Add: West Jinji Rd, Qianshan, Zhuhai,Guangdong, China, 519070
Tel: (+86-756) 8522218
Fax: (+86-756) 8669426
E-mail: global@cn.gree.com www.gree.com

600005060703