AUX
奥克斯空调

SPLIT TYPE ROOM AIR CONDITIONER

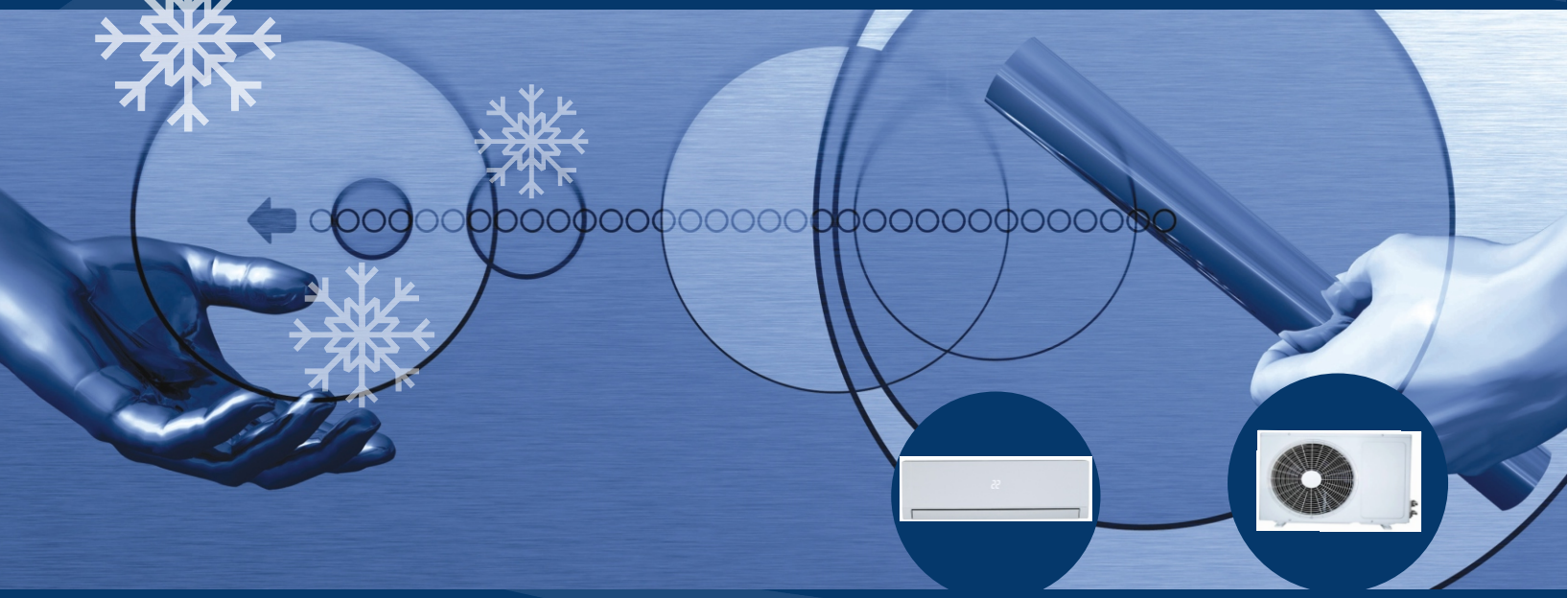

For Split Wall Mounted

Series R410a Non Inverter

Model Type For N#

9000BTU
12000BTU
18000BTU
24000BTU

Service Manual

2013

CONTENTS

Product Specification……..……..1

Refrigeration Diagram……..5

Introductions of Installation……..8

Remote Controller Introductions……16

Brief Introduction for Usage……24

Wiring Diagram……32

Troubleshooting Guide……40

Exploded Views & Parts List……...57

Chapter 1 Product Specification

1.1 Photo of Product

Indoor Unit For NA

Indoor Unit For NC

Indoor Unit For NW

Outdoor Unit For 09/12K

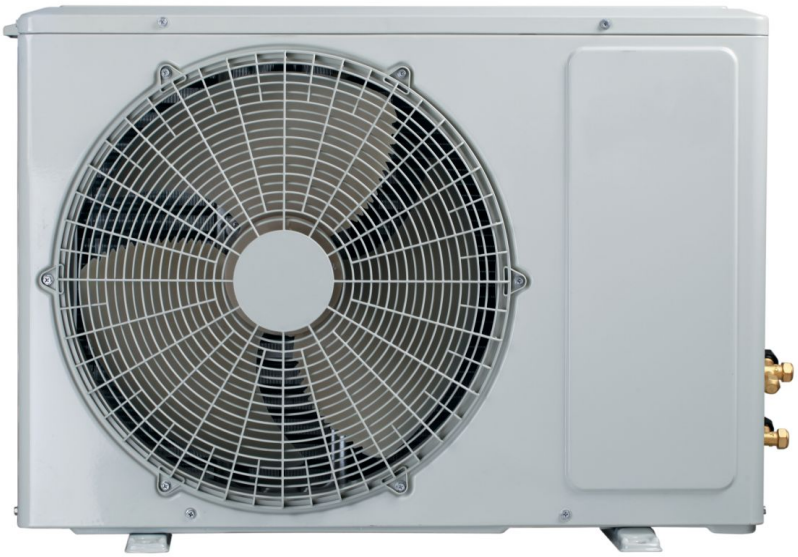

Outdoor Unit For 18/24K

1.2 Outline Dimensions

Indoor Unit

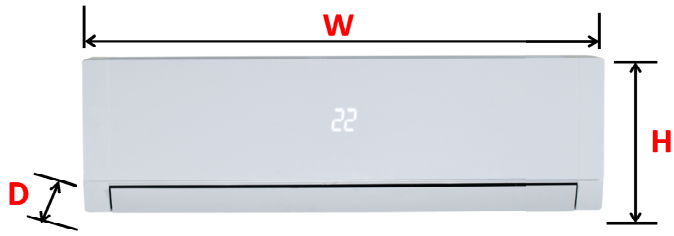

MODEL		9000BTU	12000BTU	18000BTU	24000BTU
W	mm	680	750	880	1080
D	mm	185	185	208	232
H	mm	255	255	280	300

Outdoor Unit

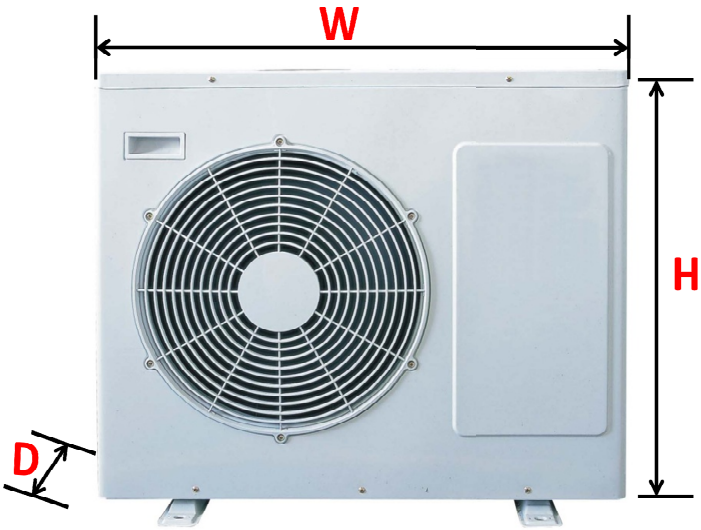

MODEL		9000BTU	12000BTU	18000BTU	24000BTU
W	mm	663	700	800	800
D	mm	254	225	300	300
H	mm	421	500	590	690

Chapter 2 Refrigeration Diagrams

2.1 Cooling Only

Cooling Mode

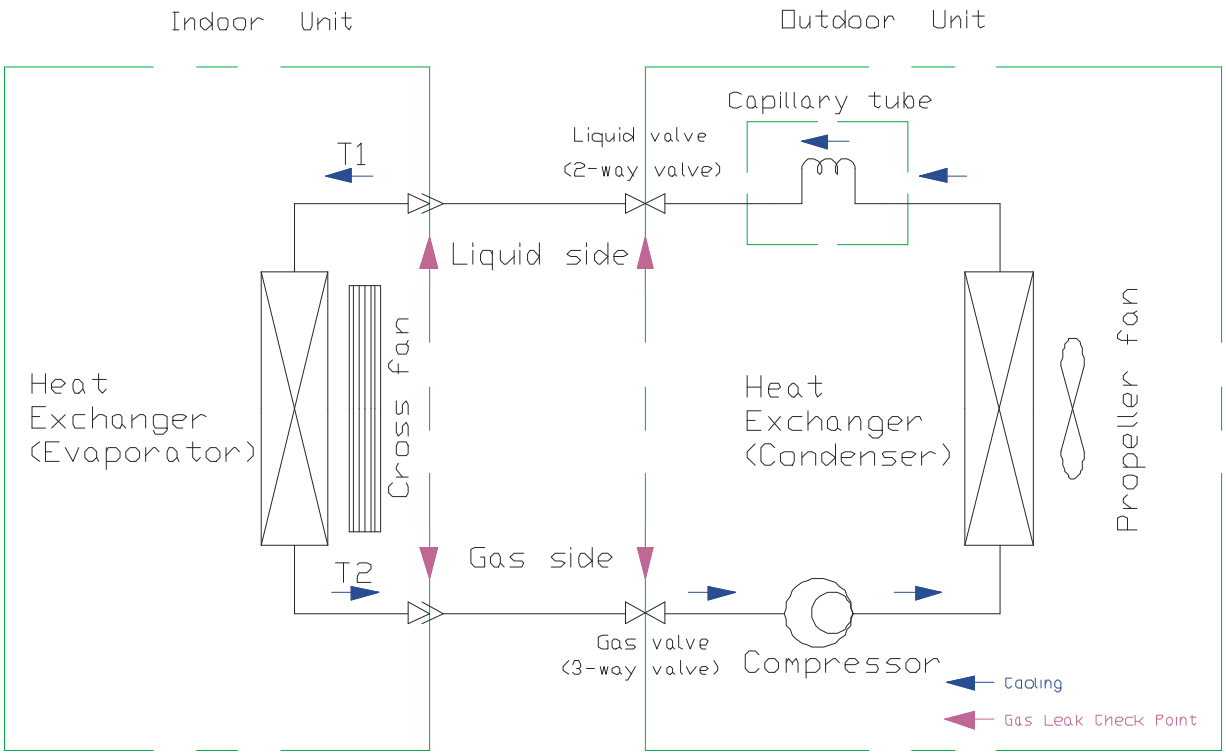

Cooling Cycle

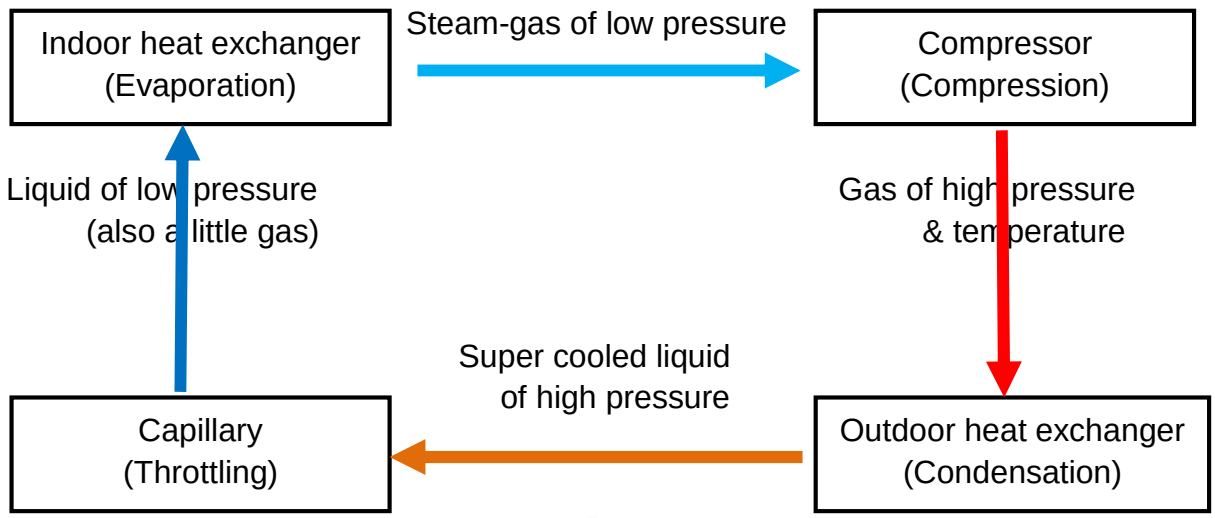

2.2 Cooling & Heating

Cooling Mode

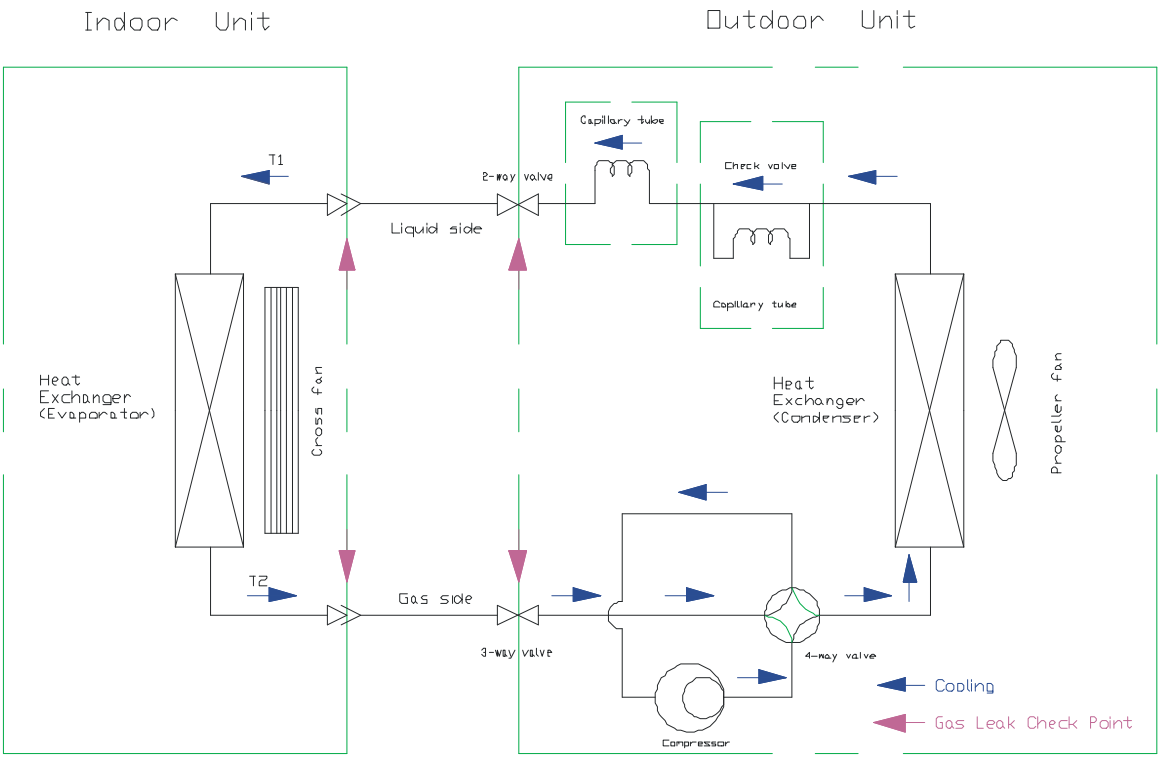

Cooling Cycle

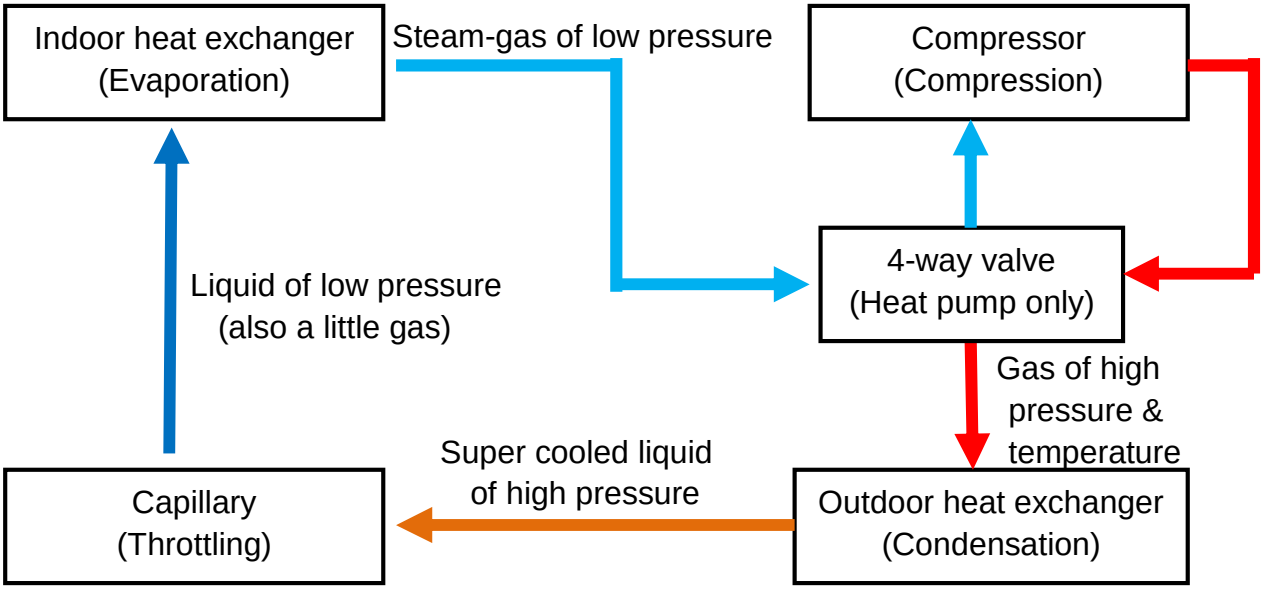

Heating Mode

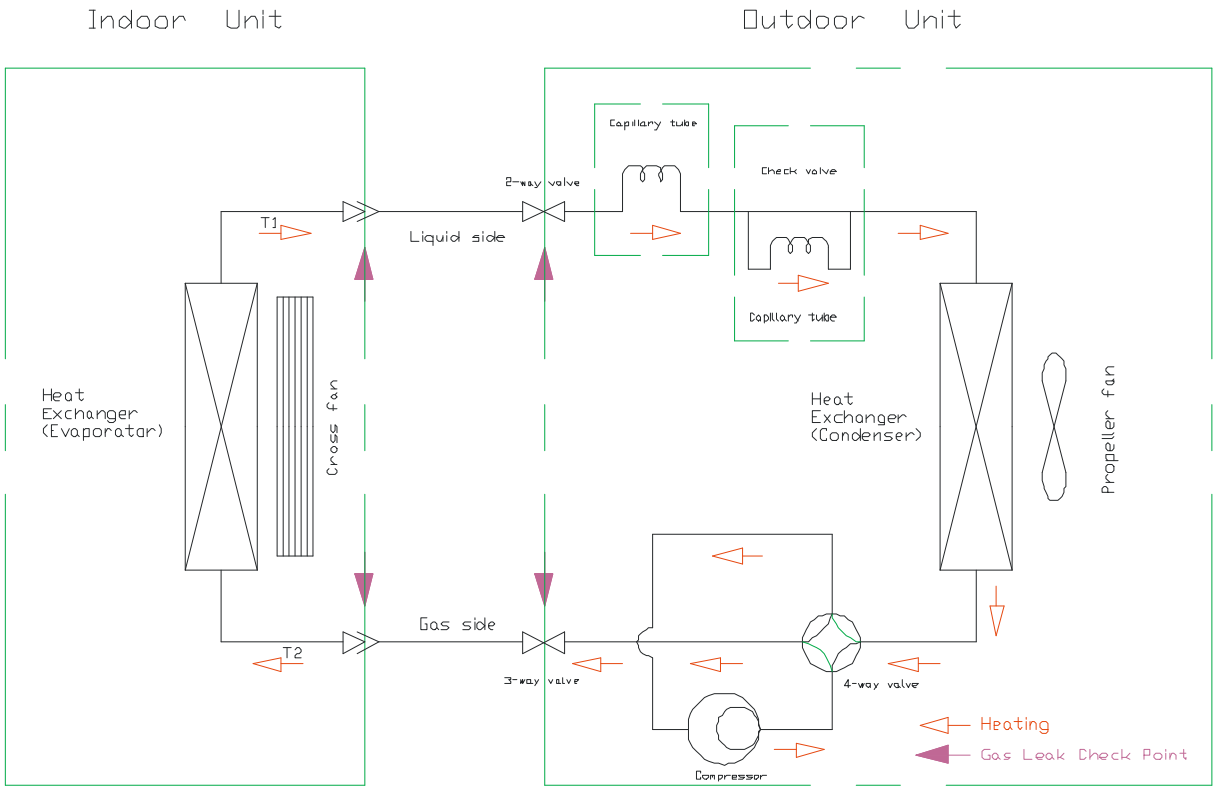

Heating Cycle

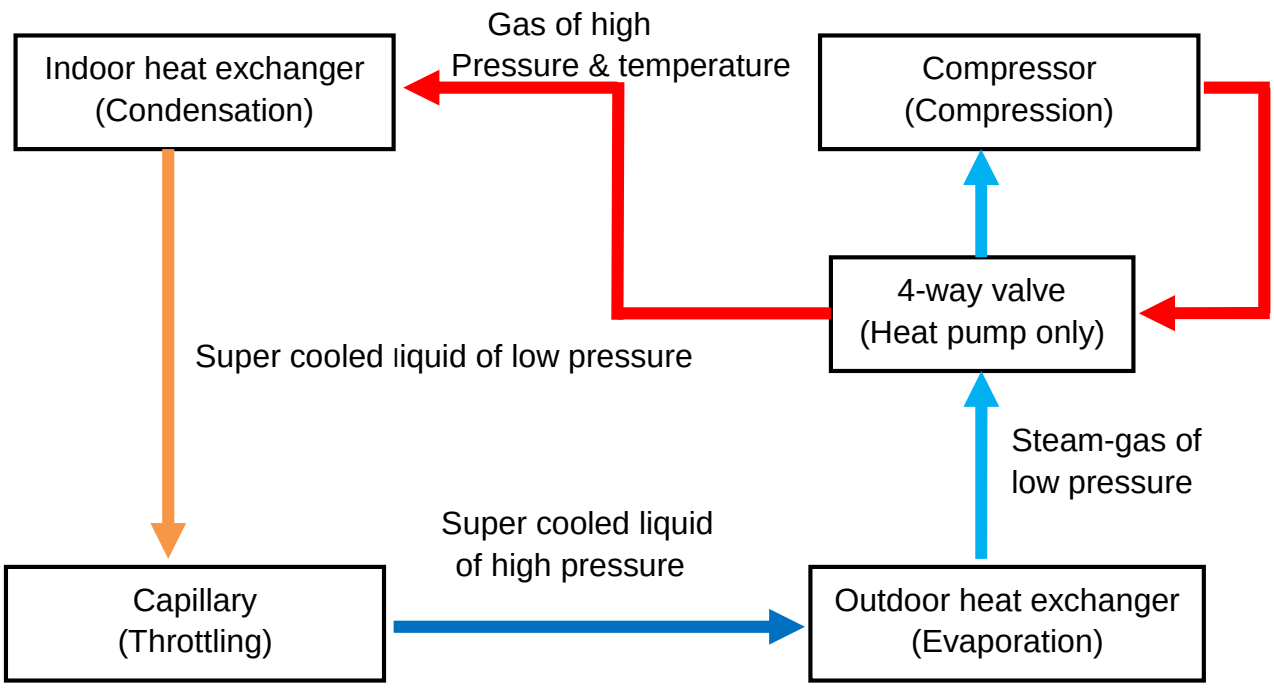

3.INTRODUCTIONS OF INSTALLATION

SPLIT TYPE WALL MOUNTED AIR-CONDITIONER INSTALLATION INSTRUCTIONS

The Installation Instructions is used to Split type wall mounted air-conditioner installation .

For air-conditioner with type Y attachment, if the supply cord is damaged, it must be replaced by the manufacturer, its service agent or similarly qualified persons in order to avoid a hazard.

※ Please read the instructions carefully before installation of the air-conditioner.

※ The installation should be carried out by specialists.

※ installating the air-conditioner and connecting the pipe and wires must be strict to reference the instructions.

※ For air-conditioner with type Y attachment, if the supply cord is damaged, it must be replaced by the manufacturer, its service agent or similarly qualified persons in order to avoid a hazard.

※For air-conditioner intended to be permanently connected to the fixed wiring must use a private circuit equipped with an all-pole disconnection device that the distance of the opening contacts is 3mm at least.

※The descriptions in this user manual are text and figures may have slightly difference to the promotion information and actual appliance. Please refer to the real appliance purchased, Thank you.

Installation order: Selection of the installing position→Installation the air-conditioner →connecting the pipes and wires→Expelling the air in the pipes and the indoor unit→Testing

Selection of the installing position

Indoor Unit

- There is no heating and steaming source nearby.
- No obstacles for installing position nearly.
- Keep good air circulation.
- Convenient to adopt measures to reduce noises.
- Don' t install them near the doorway.
- Make sure to have the distance specified in the picture between the ceiling ,wall,furniture and other obstacles.
- 2 meters high above the floor.

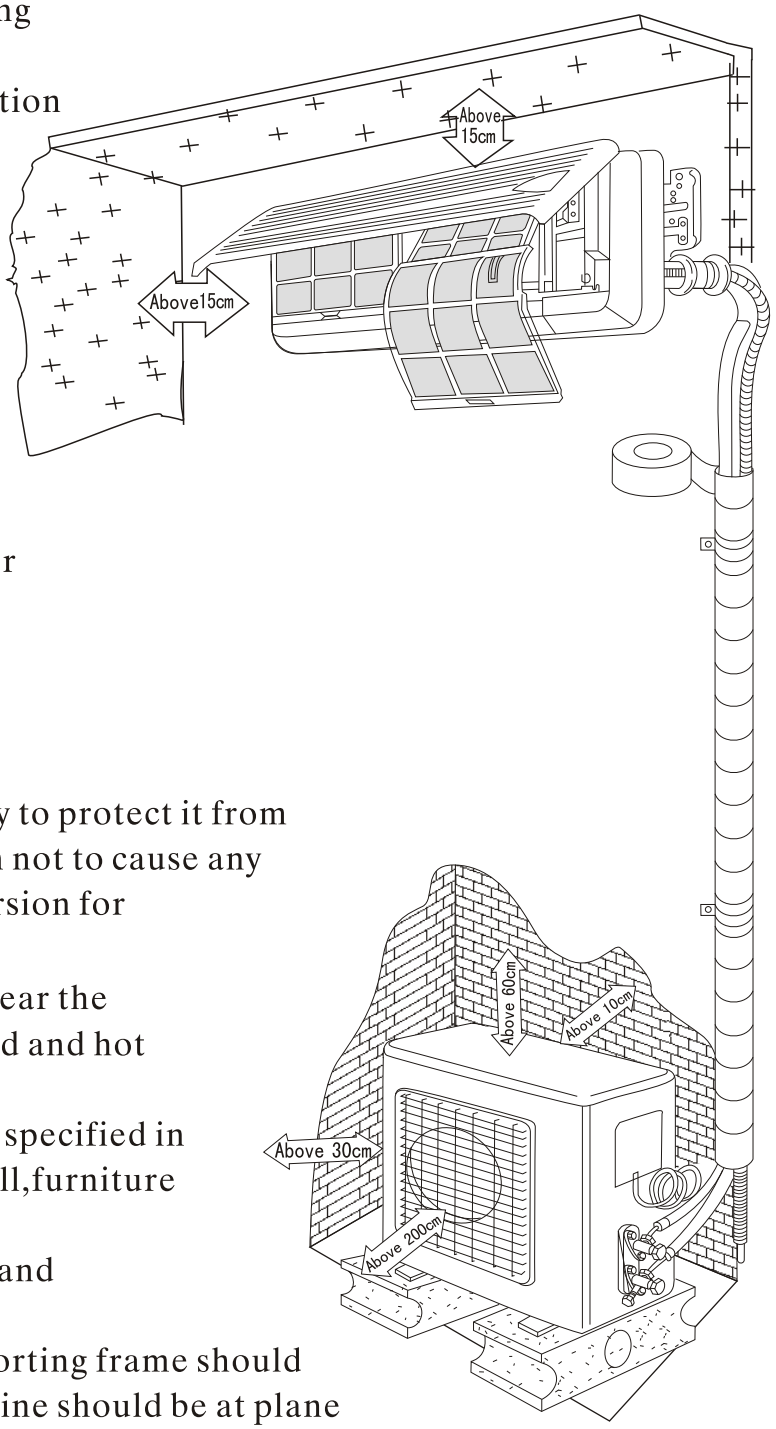

Outdoor Unit

- In case that you put up a canopy to protect it from rains and sunrays,pay attention not to cause any obstacles for the heating dispersion for the condenser.
- Don' t grow animals or plants near the installation location for the cold and hot air out will affect them.
- Make sure to have the distance specified in the picture between ceiling ,wall,furniture and other obstacles.
- Stay away from heating source and inflammable air.
- The installation base and supporting frame should be strong and secure.The machine should be at plane surface.

The distance between indoor and outdoor unit should be 5 meters and pipe length can go up to maximum 15 meters with additional refrigerant charge.

Max. Allowable Tubing Length at Shipment(m)	Limit of Tubing Length(m)	Limit of Elevation Difference H(m)	Requires Amount of Additional Refrigerant (g/m)	
			CC≤12000Btu	CC≥18000Btu
5	15	5	20	30

Installation of the Indoor Unit

- First make changes to wall and make sure that is hard and secure. Using four “＋” type screws to fasten the installation board onto the wall. Keep it water lever horizontal direction and perpendicular in vertical direction. Otherwise it might cause water drops when air-conditioner is running cooling operation.

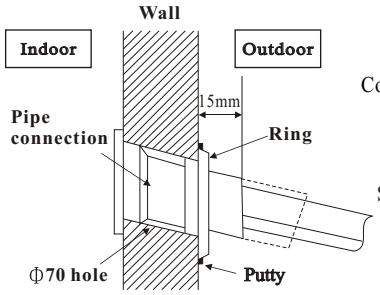

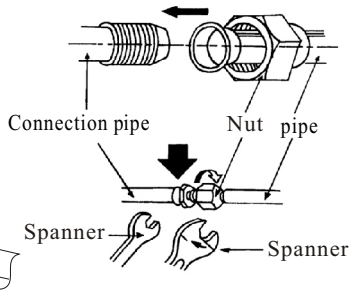

- Pull out the indoor unit pipes after detached the fixed parts on them. Connect the interconnected pipes to the indoor unit: point to the center of pipe and fasten the connection screw at first by hand and then by wrench until you hear the “Click” sound. Fastening direction is shown in the right picture. Using torque is shown in the following table.

Drilling 70mm diameter pipe hole at the left down or right down side of the installation board. The hole shall slant outward slightly.

- Arrange the connection pipes, cable, outflow tube according to the figure , then connect the drain pipe to the draining hole.
- Use insulation sleeve to warp the position of connection pipe and indoor unit, then wrap the insulating tape on the sleeve to avoid condensate water.
- Fasten connection pipes, cables and drain pipe together by plastic strap.

Remove the base support foam in one side before installation

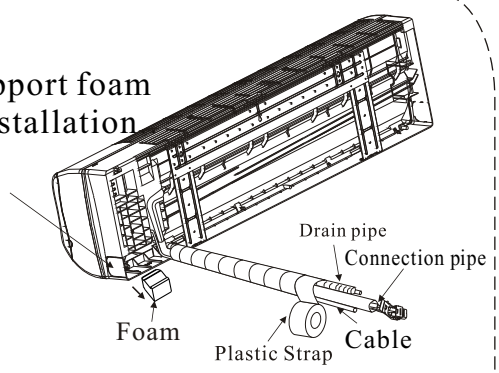

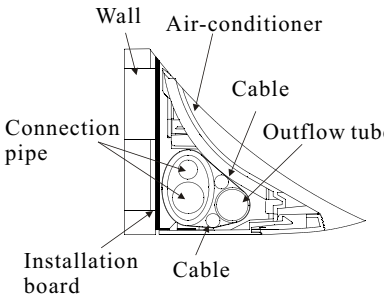

Note:
The installed air-conditioner won't be tightly appressed to the wall if the tubes are not arranged as shown in the picture.

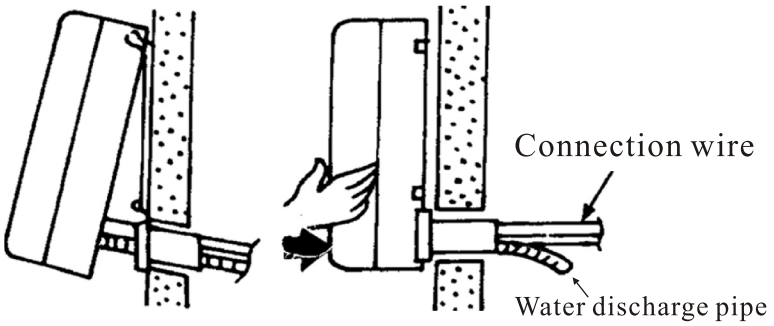

- Hang the indoor unit to the board and make sure the machine is in the middle of the board.
- Pushing the machine towards the left down and right down side of the installation board until the hangers enters tightly the grooves (it makes “click” sound)

Check the water discharge

1.Take off the frame the unit cover.

Take off the front frame for maintenance according to the following steps:

- Turn perpendicular airflow direction handle from "I" to horizontal direction.
- As shown in the picture on the right,take off two covers from the front frame and then unfasten two fixture screws..
- Pull the front frame towards yourself and take it off.

In case that put the front frame back,turn the perpendicular airflow direction handle from "I" to horizontal,then proceed according to the third and the second steps.

You should check whether the front frame is firmly inside the fixture groove on the top.

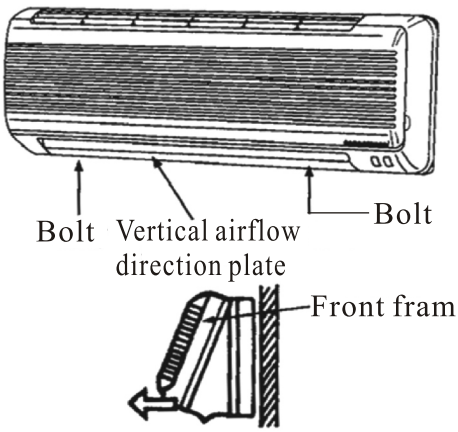

Pull down the front frame towards your and take off the front frame.

2.Check the water discharge

- Put a cup of water into groove.
- Check whether the water flow through the water discharge hole.

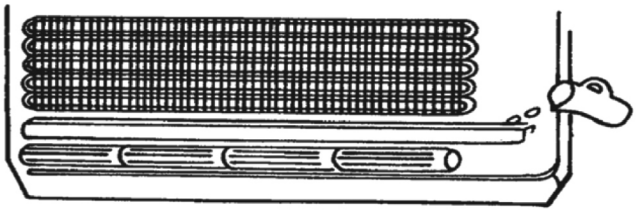

Installation of the Outdoor Unit

- The outdoor unit must be firmly fixed to avoid falling in the strong wind.
- Install on the cement base the drawing below.
- If it will be installed at seaside or at a place high above the ground and with strong wind, the AC should be installed against the wall to ensure the normal operation of the fan and the blocking plate should be used.
- If it will be installed in lift type, the structure of the mounting surface should be made of solid stick, cement or materials with equivalent strength, and be of enough bearing capacity. Otherwise, measures such as reinforcement, support or vibration damping should be adopted.

Installation outdoor unit bolt

Outdoor Unit Size of Shape (mm)	A (mm)	B (mm)
600×250×490	390	290
760×260×540	539	287
800×300×690(590)	540	326
900×330×860	606	354
380×967×805	535	353

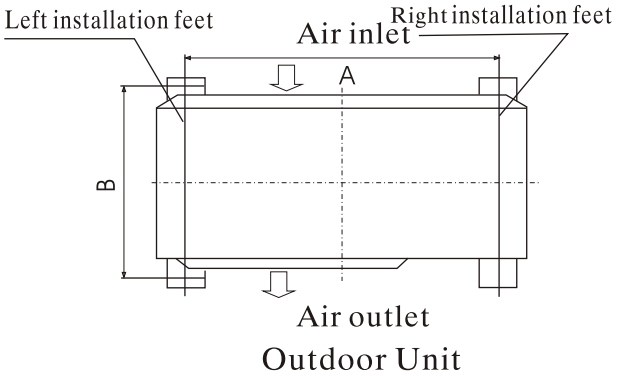

Pipe Connection

- Connect the pipe to the unit:point to the center of pipe and fasten the connection screw at first by hand and then by wrench until it is tightly fastened,The fastening direction is in the following picture.

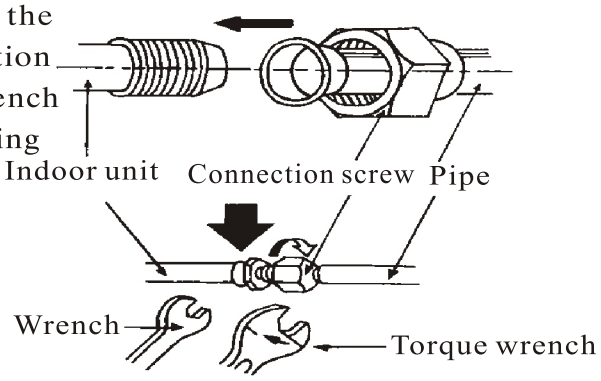

The size of pipe	Torque
Φ6.35mm($\frac{1}{4}''$)	18N. m
Φ9.52mm($\frac{3}{8}''$)	42N. m
Φ12.7mm($\frac{1}{2}''$)	55N. m
Φ15.88mm($\frac{5}{8}''$)	75N. m

- Pointing towards the center of pipe,fasten the screw with strength.
- Wrench the screw in the end until you hear the "Click" sound.

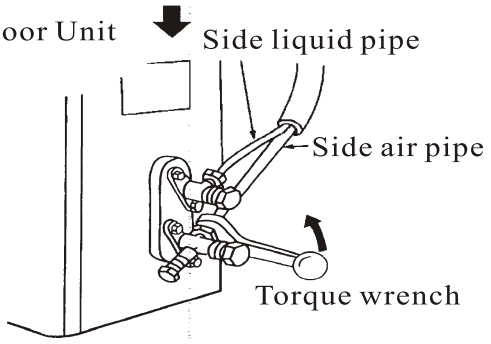

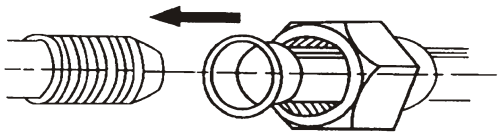

(Refer the direction to the picture)

The form of pipe

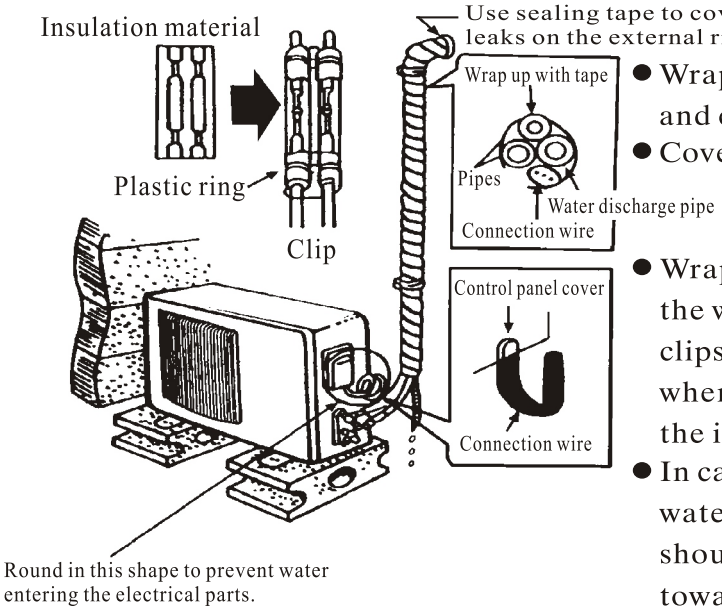

- Wrap up all pipe,water discharge and connection wire from top to below.
- Cover the connection parts with insulation material and fix them with two plastic rings.
- Wrap up the pipes with tape alongside the wall and fix them to the wall with clips.These steps are usually adopted when outdoor unit is installed below the indoor unit.
- In case that you want to have additional water discharge pipe,the end of pipe should be within certain distance towards to surface (don't let it under the water.Fix it onto the wall so it won' t be swayed by the wind)
- Wrap the pipes and connection wire well from below to top.
- Wrap up the pipes that are rounded up by the wall comers in the way shown in the picture so it can prevent water entering the room.
- Use clips or other fixture to fasten the pipes to the walls.

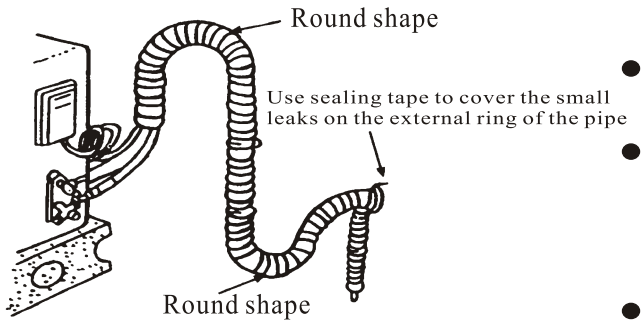

See the picture on the left

Expelling the air in the pipes and the indoor unit

Expelling the air: humid air in the refrigerating system might cause trouble of compressor.

- Take off the cover from the stop valve and T-branch valve.
- Take off the auxiliary cover from the T-branch valve.
- Turn the stop valve rod anti-clock wise to an angle of 90 degree,keep it open for 8 seconds and close the valve.
- Check whether there is air leakage at all connection parts of pipes.
- Push the top rod of T-branch valve by hexagon wrench to expel air.
- Repeat the third and fifth steps.
- Open the stop and T-branch valve with a hexagon wrench to make the unit operate.
- There is no leakage allowed,please check all the piping connection parts.You must test the leakage, generally,it can be tested by soap water.

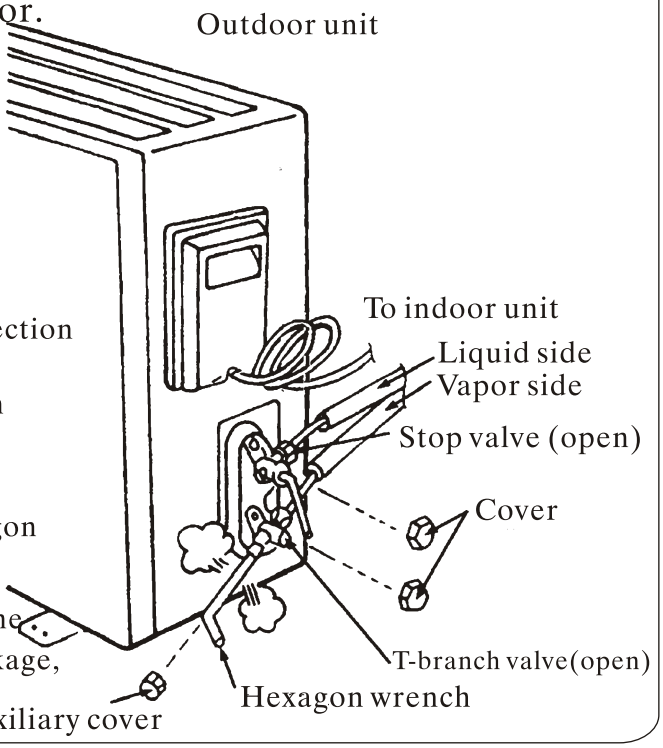

Electrical connection

- Unscrew the screw, take off the control panel cover from the unit.
- Connect the cable to their terminals according to their number.
- The grounded wire connection:
  1.loosen the grounded screw of electrical shelf.
  2.Connect the grounded wire with the grounded screw then setscrew in the " ⏚ " mark formerly.
- Fix the cable to the terminal board with fastening piece.
- Reinstall the cover with the screw.

NOTE:

※Don't reverse the power polarity.

※The wrong connection lead to the mal function of some electrical parts.

※Must fix the screwnail of the firmly wire, then drag the wire lightly, confirmation whether it's firmly.

※Must changed if the wire slide, the self-drive screw can't used to the electric connection.

※If there is a connector, connect it directly.

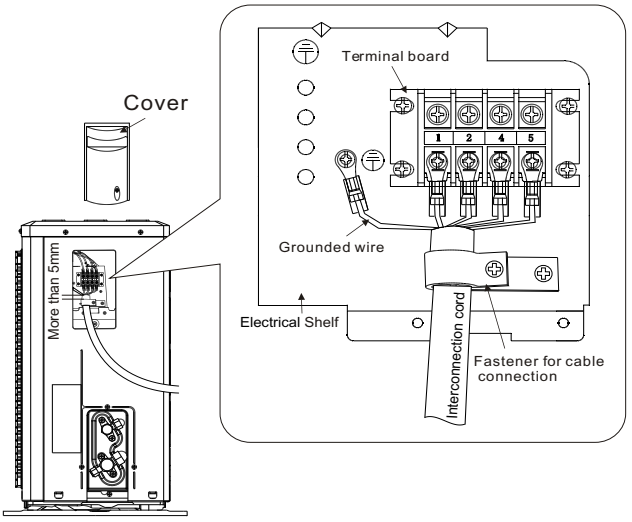

Cold wind Type
Terminal board for outdoor unit

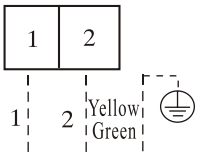

Temperature control wire connector
(only for heat pump type)

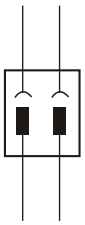

Heat-pump type
Terminal board for outdoor unit

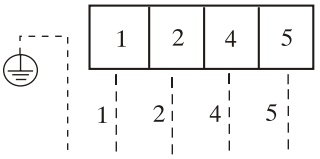

Compressor signal wire connector
(only for cooling pump type
6000W/7000W)

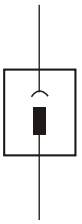

Compressor signal wire connector and temperature control wire connector
(only for heat pump type 6000W/7000W)

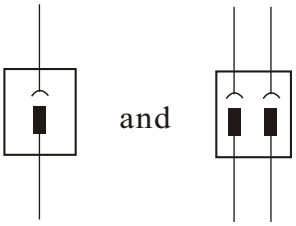

Single wire Double wires

Note:
Explanation for the power cord without plug (see below figure):

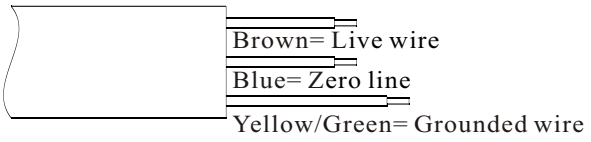

Test running

- Make sure that the pipes and wires are connected.
- Make sure that the liquid side valve and air side valve both are completely open.

1.The connection of power source

- Connect the wire to independent power source socket
- Preparation of remote controller.
- Run the air-conditioner in cooling operation mode for 30 minutes or longer.

2.Performance evaluation

- Test the out and in air temperature.
- Make sure whether the outlet air temperature subtract from inlet'sgives more than 10℃ 。

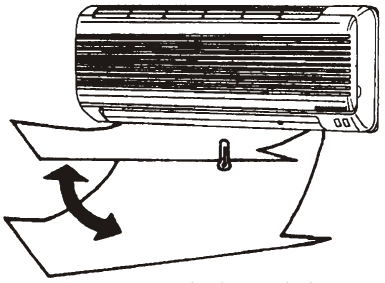

Packing List

※Please check the following attach carefully,if part attach isn't useful, please take care of it.

Packing list of the Indoor Unit

N0.	Name	Size/Model	Unit	Quantity	Remark
1	Indoor Unit		Set	1	
2	Remote Controller		PC	1	
3	Instructions		PC	1	
4	Batteries		PC	2	
5	Drain pipe		PC	1	
6	Certificate		PC	1	

Packing list of the Outdoor Unit

N0.	Name	Size/Model	Unit	Quantity	Remark
1	Outdoor Unit		Set	1	
2	Low pressure connection pipe		PC	1	
3	High pressure connection pipe		PC	1	
4	Plastic Strap		ROLL	1	
5	Isolation Strap		ROLL	1	
6	Pipe Protection Ring		PC	1	
7	Luting (putty)		PACKET	1	
8	Certificate		PC	1	

4.REMOTE CONTROLLER INSTRUCTIONS

Safety Precautions

Incorrect operation due to ignoring instruction will cause harm or damage. The seriousness is classified by the following indications:

WARNING	This symbol indicates the possibility of death or serious injury.
CAUTION	This symbol indicates the possibility of injury or damage to properties only.

WARNING

- The air conditioner must be grounded. Incomplete grounding may result in electric shocks. Do not connect the earth wire to the gas pipeline, water pipeline, lightning rod, or telephone earth wire.
- **Don't pull the power cord when pull out the power plug.** The damage of pulling power cord will cause serious electric shock.

- **Don't install air conditioner in a place where there is flammable gas or liquid. The distance between them should above 1m.** It may cause fire.

- **Don't touch the swinging wind vanes.** It may clamp your finger and damage the driving parts of the wind vanes.

- Cut off the main power switch when not using the unit for a long time. Otherwise, it may cause product failure or fire.

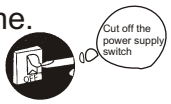

- Don't share the socket with other electric appliance, and use the broken or unstandord cord. Otherwise, it can cause electric shock even fire.

- Clean the dust on the plug regularly. Otherwise the dust mixed, humidity will result in insulation fault even fire.

- This appliance is not intended for use by persons (including children) with reduced physical, sensory or mental capabilities, or lack of experience and knowledge, unless they have been given supervision or instruction concerning use of the appliance by a person responsible for their safety.
- **Don't pull out the power plug during operating or with wet hands.** It can cause electric shock or fire.

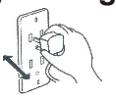

- **The power plug must be inserted tightly.** Otherwise, it can cause electric shock or overheating, even fire.

- **Don't put a finger, a rod or other object into the air outlet or inlet.** As a fan is rotating at a high speed, it will cause injury.

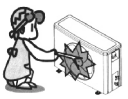

- **Don't attempt to repair the air conditioner by yourself.** You may be hurt or cause further malfunctions.

- Stop operation and cut off the main power in storm or hurricane. Operation with windows opened may cause electric shock.

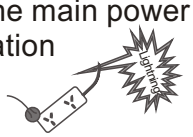

- Take care not let the remote control and the indoor unit watered or being too wet, or may short circuit even caused fire

- An earth leakage breaker with rated capacity must be installed to avoid possible electric shocks.

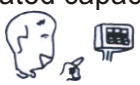

- Children should be supervised to ensure that they do not play with the appliance.

- Don't use liquid or corrosive cleaning agent wipe the air-conditioner and sprinkle water or other liquid either. Otherwise the inclosure will be damaged even electric shock.

CAUTION

1.Don't install the indoor unit under sunshine directly.
2.Don't block air inlet or air outlet, otherwise, the cooling or heating capacity will be weakened, even cause system stop operating.
3.Don,t apply the cold air to the body for a long time. It will deteriorate your physical conditions and cause health problems.
4.Close the windows and doors, otherwise, the cooling or heating capacity will be weakened.
5.If the air filter is very dirty, the cooling or heating capacity will be weakened. Please clean the air filter regularly .
6.It was prohibited to stand or put things onto the top of the outdoor, to avoid drop or damage. In no case should children be allowed to sit on the outdoor unit.
7.Set the suitable temperature, especially there are old people, children and patients in the room. Generally, keep the temperature difference for 5℃ between the inside and outside.
8.In case that the unit occurs closing down due to the severe interference from outer environments such as mobile phone, please cut off the plug and plug in to restart the air conditioner after several seconds .
9.It is forbidden to let the air conditioner keep precision instrumentation, artistic production for long time and make food fresh, otherwise abnormal using will cause damage and weaken.
10.It is forbidden to let children and the disabled use air-condition without other adult checking.
11.Open windows frequently after using air-condition for a long time.
12. If the equipement emissions cannot meet the technical requirement of IEC 61000-3-3,Following Attention should be take care.
Attention!
Through poor conditions of the electrical MAINS, shortly voltage drops can appear when starting the EQUIPMENT. This can influence other equipment (eg. Blinking of a lamp). If the MAINS-IMPEDANCE Zmax< OHM(See attached nameplate), such disturbances are not expected. (In case of need, you may contact your local supply authority for further information).

WEEE Warning

Meaning of crossed out wheeled dustbin:

Do not dispose of electrical appliances as unsorted municipal waste, use separate collection facilities.
Contact you local government for information regarding the collection systems available.
If electrical appliances are disposed of in landfills or dumps, hazardous substances can leak into the groundwater and get into the food chain, damaging your health and well-being.
When replacing old appliances with new ones, the retailer is legally obligated to take back your old appliance for disposals at least free of charge.

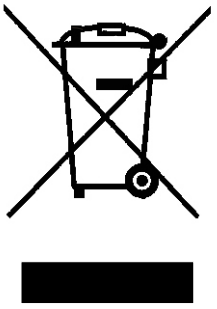

Name of Each Part

Indoor Unit

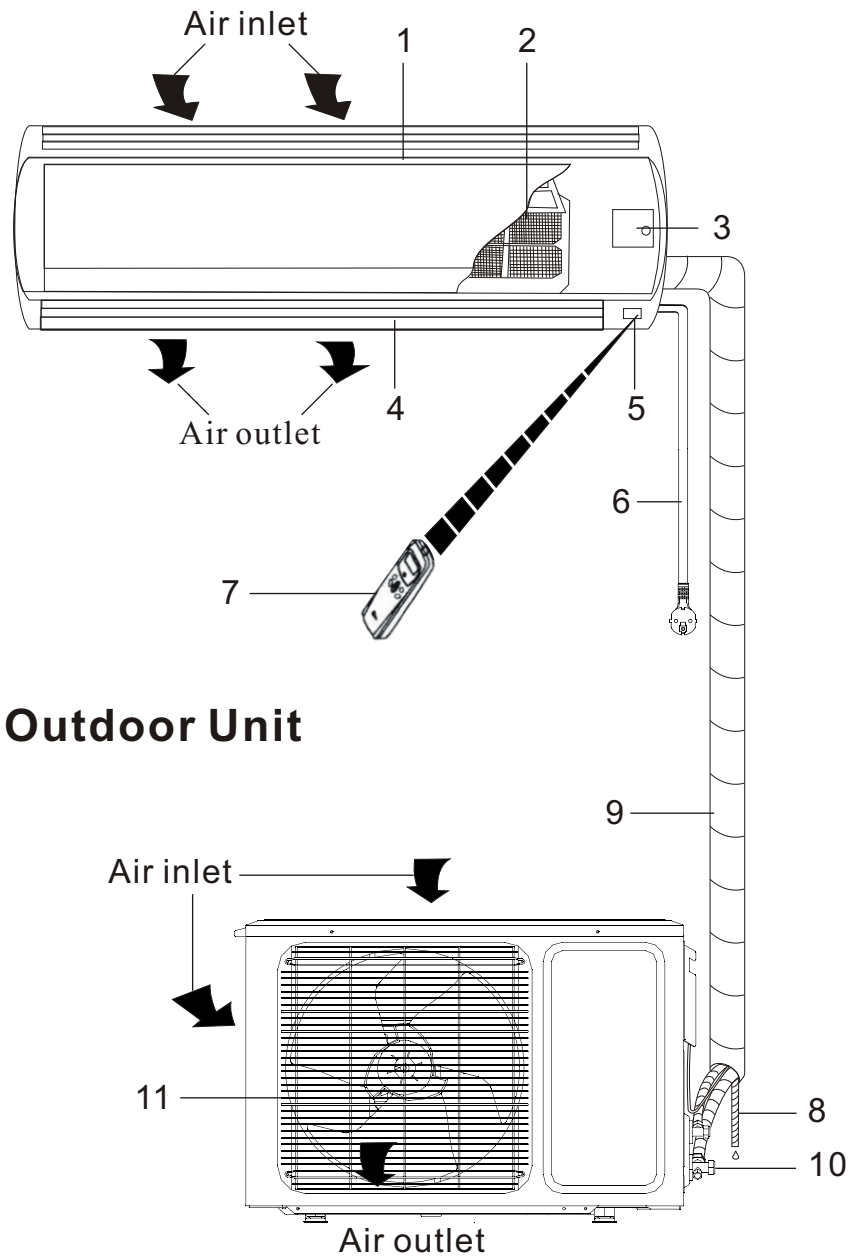

Indoor Unit

1、Front panel
2、Air filter
3、Handling switch
4、Louver
5、Signal receptor
6、Supply cord
7、Remote controller
8、Drain hose
9、Refrigerant gas/ liquid pipe

Outdoor Unit

Outdoor Unit

10、Cut-off valve
11、Air outlet cover

Note:

1. If the power supply from outdoor unit, you can find the power supply card is fitted in the outdoor unit.
2. The descriptions in this user manual are text and figures may have slightly difference to the promotion information and actual appliance. Please refer to the real appliance purchased, Thank you.

Operation

★ Remote controller operation

See *"air conditioner remote controller instruction"*

★ Manual operation

☆ Manual operation

When the remote controller does not work or can not be found, please follow these steps:

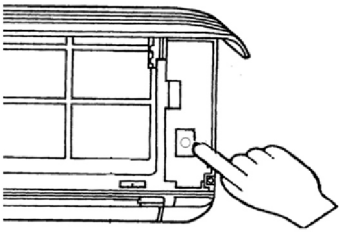

1.As the unit is operating, you can press the "Auto button" to stop operating.

2.As the unit is stopping, you can press the "Auto button" to start operating.

☆ Adjusting air flow direction

1.Adjusting horizontal air flow manually.

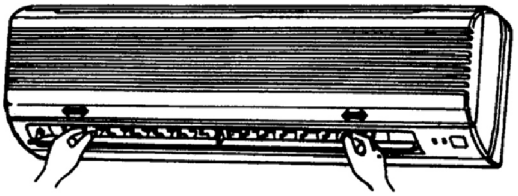

Use your hands to move the vertical airflow vane and change the horizontal wind direction.

⚠Note:

a. Adjust the horizontal air flow direction before the air-conditioner starts. Don't insert your finger into air intake or outlet vents when the air-conditioner is operating.

b. For appliance with auto pendulum wind function, please refer to *"air conditioner remote controller instruction"* for how to adjust horizontal air flow.

2. Adjusting vertical air flow direction(up-down)

Refer to *"air conditioner remote controller instruction"* for how to adjust vertical airflow direction through adjusting the horizontal airflow vane by remote controller.

⚠Note:

- Adjust the vertical air flow direction by remote controller. When you adjust the horizontal airflow vane by hand, the machine may cause problem.
- Manual operation can be used temporarily in case you can not use remote controller or its batteries are exhausted.
- When the air-conditioner stops, the horizontal wind vane will close the wind outlet of air conditioner.

Notices

To prevent injury and property damage, Please pay attention to these following before operating the air conditioner.

★ Checking before operation

1. Make sure that the earth wire is connected safely and reliably.
2. Make sure the filter net is properly fixed.
3. Make sure that air outlet and inlet are not blocked.
4. Please clean the filter before starting the air-conditioner referring to page to 6 "Cleaning" for how to operate.
5. Check to see whether the outdoor install bracket is damage. If yes, please contact our Service center locally.

★ Safety tips

In order to use the air conditioner properly, please refer to its working temperature range. Otherwise, indoor unit automatic protection function may be activated, cooling or heating efficiency will be weakened.

The air-conditioner may can't run in normal followed under mentioned table

Cooling	Outdoor	＜18℃
	Indoor	＞43℃
Heating	Outdoor	＞24℃
		＜-7℃
	Indoor	＞27℃
Dehydrating	Indoor	＜18℃

Care and Maintenance

★ Cleaning

☆ Cleaning the indoor unit

1.Turn off the air-conditioner and remove the electrical plug from the outlet.

2.Wipe the indoor unit with dry cloth or wet cloth which is dipped by cold water.

⚠ **Note :**

- Don't use water above 45℃ to wash the panel, or it could cause deformation or depigment.
- Don't use thinner, polishing powder, benzene and other volatile chemicals.
- Don't use liquid or corrosive detergent clean the appliance and don t splash water or other liquid onto it , otherwise, it may damage the plastic components, even cause electric shock.

☆ Cleaning air filter

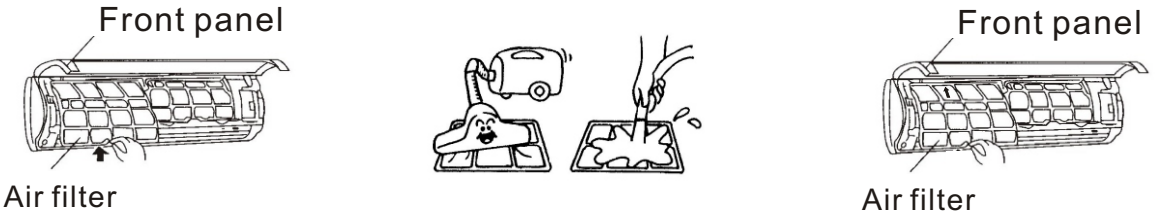

1.Raise up the front panel of indoor unit until it suddenly stop, then raise up the protruded part of air filter, and then take it out.

2. Use a vacuum cleaner or wash them with water, then dry it in the shade.

3. Reinsert the air filter into the indoor unit until being entirely fixed, then close the front panel.

★ Maintenance

1. Select "FAN" operation mode, make the air conditioner run a long time to dry.

2. Turn off the air conditioner and cut off the power supply.

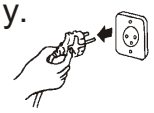

3. Take out the batteries from the remote controller.

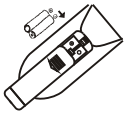

4. Clean air filters and other parts.

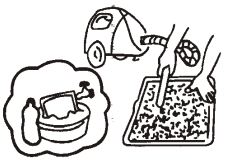

Troubleshooting

Check the following before requesting on service centre if the malfunction occurs.

Phenomenon	Trouble shooting
Air conditioner dose not operate at all	● Has the power been shut down? ● Is the wiring loose? ● Is the voltage higher than 1.1 times of max rated voltage or lower than 0.9 times of min rated voltage? ● Is the fuse burnt? ● Does it reach the set time for start up?

Phenomenon	Troubleshooting
Remote controller is not available	● Is the remote controller out of effective distance to the indoor unit? ● Is the battery exhausted? ● Are there any obstructions between the controller and the signal receptor?
Cooling (Heating)efficiency is not good	● Is the setting temperature suitable? ● Is the air inlet or outlet obstructed? ● Are air filter dirty? ● Is indoor fan speed set at low speed? ● Is there any heat source in your room?
Indoor unit does not operate immediately when the air conditioner is restarted	Once the air conditioner is stopped, it will not operate in approximately 3 minutes to protect itself.
There is unusual smell blowing from the outlet after operation is started.	This is caused by the odour in the room permeated from building material, furniture, or smoke.
Sound of water flow can be heard during cooling operation	This is caused by the refrigerant flowing inside the unit.
Mist is emitted during cooling operation.	Because the air of the room is cooled down rapidly by the cold wind and it looks like the fog.
Mist is emitted during heating operation.	This generate due to moisture in defrosting process.
Low noise can be heard during operation	● A low hissing sound is caused by the refrigerant flowing. ● A low squeak sound is caused by the deformation of plastic due to temperature.

In case the following situation, please immediately stop all operations and cut off the power supply, then contact with service centre .

- The fuse and switch often breaks.
- Carelessly splash water or something into air conditioner.
- Unusual noise can be heard during operation.
- Electrical wiring and power plug are very hot.
- Wind blowing from the outlet smells terrible during operation.
- The Run light or other display flashes rapidly and keeps flashing after repluging.

Installation Guide

★ Guide for customer

1. The installation must be done by professional referring to the *"Installation instructions"* .
2. The wiring must be done by qualified electrician according to the electrical safety requirements.
3. The customer should have a qualified power supply which coincides with the tag of air conditioner, the normal voltage should be in the range of 90-110% of its rated voltage.
4. The air conditioner must be well grounded, the switch of the main power of air-conditioner must be reliably grounded.
5. If your air conditioner is not fitted with a supply cord and a plug, an all-pole switch must be installed in the fixed wiring and the distance between contacts should be no less than 3.0 mm.
6. If your air conditioner is permanently connected to the fixed wiring and have a leakage current that may exceed 10 mA, leakage protector must be installed in the fixed wiring.
7. The power supply circuit should have leakage protector and air switch of which the capacity should be more than 1.5 times of the maximum current.

★ Notices

1. The air conditioner must be installed on well strong supporter.
2. The appliance shall be installed in accordance with national wiring regulations.
3. Fix the machine firmly, otherwise it will produce abnormal noise and vibration.
4. Install the outdoor unit in the place where it wouldn t disturb your neighbour.
5. The method of connection of the appliance to the electrical supply and inter connection of separate somponents, please see the electric connection elements shart which stick on the machine.
6. Is the power supply cord is damaged, it must be replaced by the manufacture or its service agent or a similar qualified person.
7. After installation, the power plug should be easily reached.

5.BRIEF INTRODUCTION FOR USAGE

Names and functions of the buttons

The closing state of remote controller:

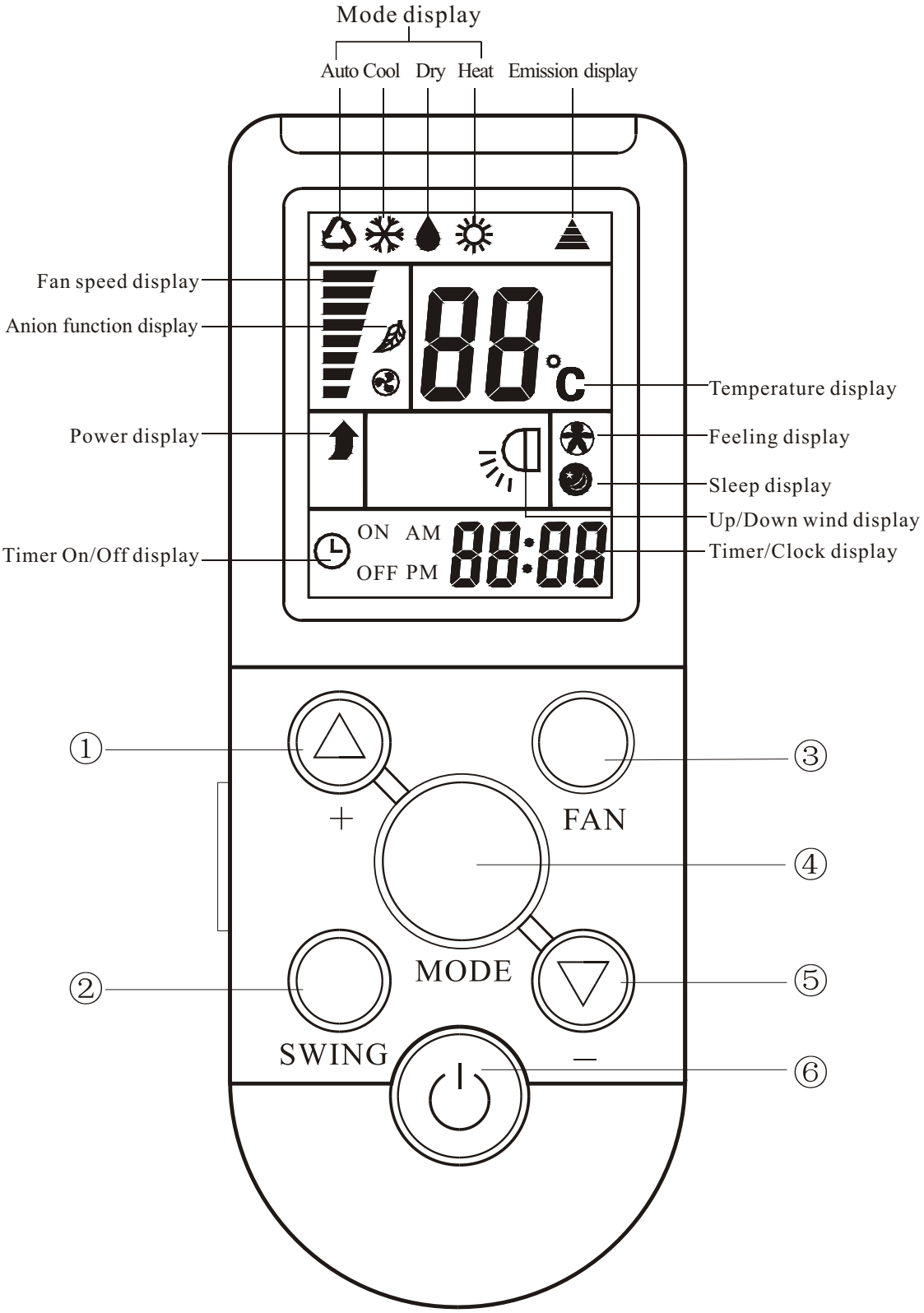

① “ + ” **button**

This button can set room temperature.
Press it once ,the temperature increases 1℃.Press it continuously, the temperature increases at the speed of 4℃/s.
This function is invalid when the appliance at the Fan and Auto mode.

② “**SWING**” **button**

Press the button, the LCD shows the “ ” symbol, the horizontal airflow direction plate can adjust automatically. When you have the desired wind direction, please press it again, the airflow direction plate will stop at the situation.

③ “**FAN**” **button**

You can select fan speed show as the follow:

The type of E series:

→ Low → Med → High → Auto

The type of H、M、multi-split series:

→ Quiet → Low → Med → High

④ “**MODE**” **button**

Which enables you to select different operation mode, after each pressing,the operation mode will be changed.It shows in the following display.

→ **AUTO** → **COOL** → **DRY** → FAN → **HEAT**

Remark:Cold wind type has no heating function.

⑤ “ **-**” **button**

This button can set room temperature.
Press it once ,the temperature decreases 1℃.Press it continuously, the temperature decreases at the speed of 4℃/s.
This function is invalid when the appliance at the Fan and Auto mode.

⑥ “⏻” **Button**

You can start the air-conditioner by pressing this button and stop its operation by pressing it again.

The opening state of remote controller:

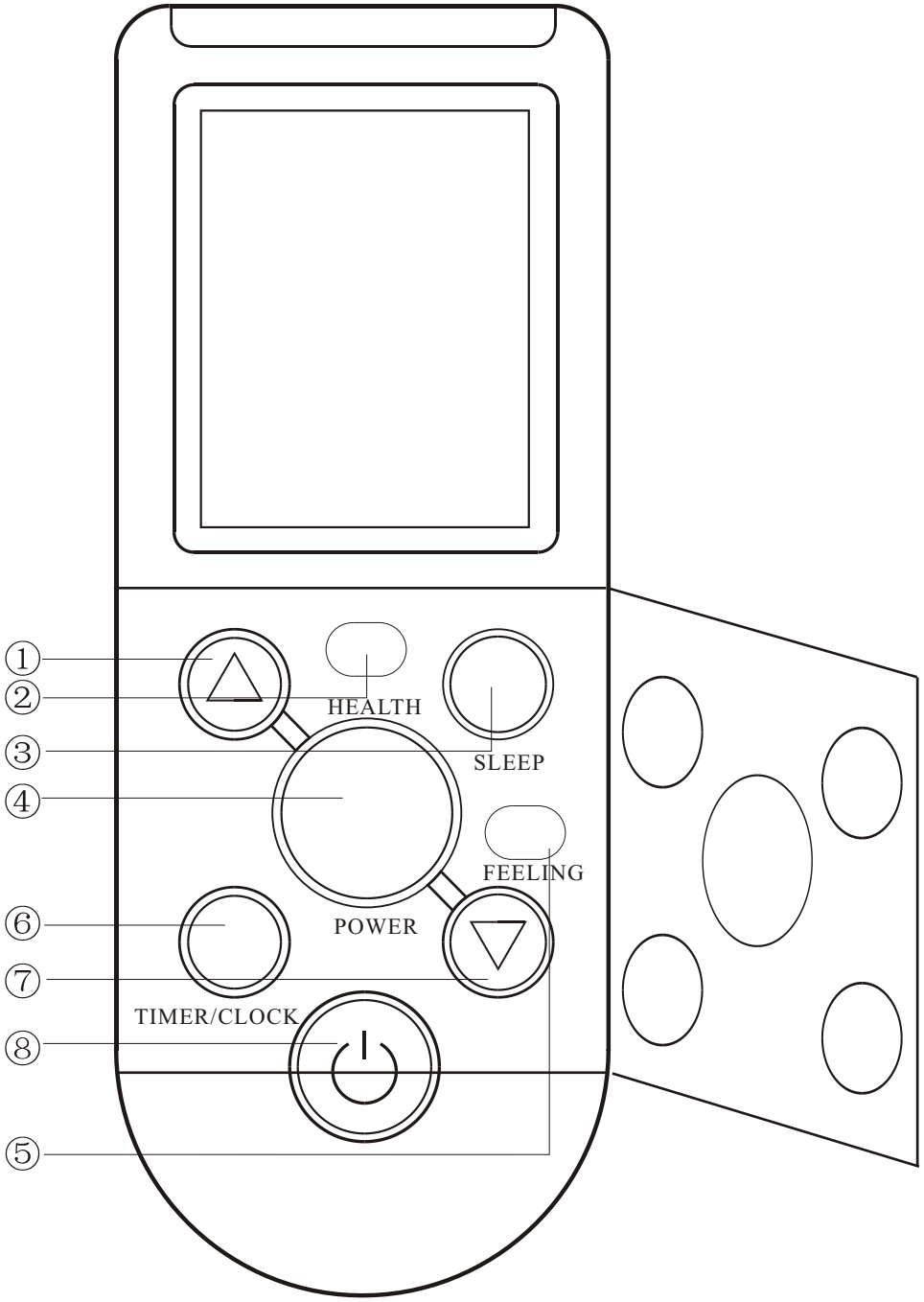

The air condition have some assistant function as follow. The 'HEALTH' and 'FEELING' button function are optional, please check whether your air conditioner has those functions before you use.
There is no POWER function in 18000Btu~24000Btu catena air-condition.

① “ △ ” **button**

This button can adjust clock time and the timer time.

Adjusting clock time and timer time

Press it once ,the time increases one minute. Press it for 1 to 3 seconds, time display will increase at the speed of 2min/s.
For 3 to 5 seconds, it will increase at the speed of 10min/s.
For more than 5 seconds, it will increase at the speed of 10min/s.

② “**HEALTH**” **button**

Press this button ,the LCD shows the “ ” symbol, the anion emission function of the air conditioner is started.
Press the button once again, The “ ” symbol disappears, the function is cancelled at the same time.

③ “**SLEEP**” **button**

Press this button ,the LCD shows the “ ” symbol, the sleeping function of the air conditioner is started. After 7 hours of setting this function ,the air conditioner will beoff automatically.
Press the button once again, The“ ”symbol disappears, the function is cancelled at the same time.
This function is invalid when the appliance under the Fan mode.

④ “**POWER**” **button**

☆ When it displays “**POWER**” **button:**

Press this button, the fan speed reach the highest , press it again it resume the foregoing fan speed.

Note: 1.This function is valid only on HEAT or COOL mode.

Screen display setting

1.Press the “POWER” for 3seconds,it will display the state of the air conditioner through LED、LCD、or VFD.
2.Press it for 3seconds again, it will cancel the screen display.

⑤ “**FEELING**” **button**

When it displays “**FEELING**” button**:**

Press this button can be used to set the feeling function.
The LCD shows the actual room temperature when the function set and it shows the setting temperature when the function cancelled. This function is invalid when the appliance at the Fan mode.

⑥ "TIMER/CLOCK" button

Setting the "ON/OFF" timer time

When remote controller is at the on/off state, Press this button , the LCD flickers the"off/on" symbol. Press the"△"or"▽" button to set the timer time. After finishing it, press this button again in 10 seconds to affirm. If the setting time is the same as the current time, this setting is invalid.

Press the button once more, The"off/on" symbol disappears, the function is cancelled at the same time.

Adjusting the clock time

Press this button in 5 seconds Under the state of no timer setting , the LCD flickers the"am pm 88:88" symbol. Press the"△" or"▽" button to set the timer time. After finishing it, press this button again in 10 seconds to affirm. If not, this operation is invalid.

⑦ "▽" button

This button can adjust clock time and the timer time.

Adjusting clock time and timer time

Press it once ,the time decreases one minute. Press it for 1 to 3 seconds, time display will decrease at the speed of 2min/s.
For 3 to 5 seconds, it will decrease at the speed of 10min/s.
For more than 5 seconds, it will decrease at the speed of 10min/s.

⑧ "⏻" button

You can start the air-conditioner by pressing this button and stop its operation by pressing it again.

Application method

★ Fix batteries

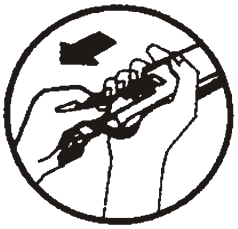
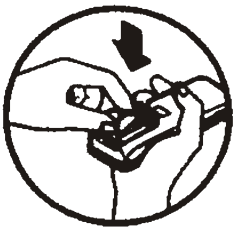
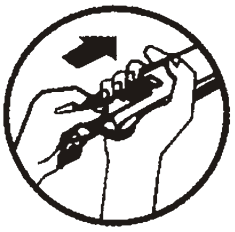

1.Slide open the cover according the direction indicated by arrowhead.

2.Put into two brand new batteries (7#),position the batteries to right electric poles (+&-).

3.Put back the cover.

Remark:Make sure to connect the wire to independent power source socket before you use the remote controller.

★ Cooling /Heating operation mode

(Cold wind type has no heating function)

1.Press the "⏻"button,the operation indicator is on,the air conditioner starts to operate the Cooling or Heating mode. Press the button again,the air-conditioner stops.

2.Press the **MODE** button,select the Cooling or Heating operation mode.

3.Press the "+" or " -" button, you can set the temperature range from 16℃ to 32℃.

4.Press the **FAN** button, you can select fan speed.

The type of H、M series:

You can select fan speed from "Quiet", "Low", "Med", "High"

The type of E series:

You can select fan speed from "Low", "Med", "High", "Auto"

★ Drying operation mode

1.Press the **MODE** button,select the dry mode operation.

2.Press the "+" or " -" button, you can set the temperature range from 16℃ to 32℃.

3.Press the **FAN** button, you can select fan speed.

The type of H、M series:

You can select fan speed from "Quiet", "Low", "Med", "High"

The type of E series:

You can select fan speed from "Low", "Med", "High", "Auto"

★Circulation operation mode

1.Press the **MODE** button,select the fan operation mode.

2.Press the **FAN** button, you can select fan speed .

The type of H、M series:

You can select fan speed from "Quiet", "Low", "Med".

The type of E series:

You can select fan speed from "Low", "Med", "High".

Remark: In the fan operation mode,to set the temperature is noneffective.

★ Automatic operation mode

1.Press the **MODE** button,select the automatic operation mode.

2.Press the **FAN** button, you can select fan speed .

The type of H、M series:

You can select fan speed from "Quiet", "Low", "Med", "High"

The type of E series:

You can select fan speed from "Low", "Med", "High", "Auto"

Remark: In the fan operation mode,to set the temperature is noneffective.

★ Clock time setting

1.Press the **TIMER/CLOCK** button for 5 seconds, the time indicator at present begins to glimmer.

2.Adjust present time through pressing the "＋" or "－" button.

3.Press the **TIMER/CLOCK** button once again, the time setting is finished.

Remark :Time can be regulated only after the timing mode is cancelled .

★ Timer setting

☆ Set the "**Timer ON**" (It is effective only when the air conditioner is shut off).

1.Press the **TIMER/CLOCK** button ,the remote controller display "on" immediately.

2.Adjust time through pressing the "＋" or "－" button.

3.Press the **TIMER/CLOCK** button again, the "**Timer ON**" setting is finished.

☆ Set the "Timer OFF". (It is effective only when the air-conditioner is running.)

1.Press the **TIMER/CLOCK** button ,the remote controller display "off" immediately.

2.Adjust time through pressing the “ + ” or “ — ” button.

3.Press the **TIMER/CLOCK** button again, the “**Timer OFF**” setting is finished.

★ Sleeping operation mode

1.Press the SLEEP button,the sleeping indicator light of indoor unit flashes on.

2.After the setting of sleeping mode,the cooling operation enables the set temperature to increase 1℃ after 1 hour and another 1℃ automatically after 1 hour.

3.After the setting of sleeping mode,the heating operation enables the set temper ature to drop 2℃ after 1 hour and another 2℃ automatically after 1 hour.

4.The air-conditioner runs in sleeping mode for 7 hours and stops automatically.

Remark: Press the **MODE** button or **ON/OFF** button,the remote controller clears sleeping mode away.

Notice:

It is general sketch map of outline for remote controller. Please refer to the real one you buy for specific location of buttons, and if the relevant keys are not indicated, it means absence of corresponding function.

Attention

★ Aim the remote controller towards the receiver on the air-conditioner .

★ The remote controller should be within 8 meters away from the receiver.

★ No obstacles between the remote controller and receiver.

★ Don’t drop or throw the remote controller.

★ Don’t put the remote controller under the forceful sunrays or heating facilities and other heating sources.

★ Use two 7# batteries,don’t use the electric batteries.

★ Take the batteries out of remote controller before stop its using for long.

★ When the noise of transmitting signal can’t be heard indoor unit or the transmission symbol on the display screen doesn’t flare,batteries need be replaced.

★ If reset phenomenon occurs on pressing the button of the remote controller,the electric quantity is deficient and new batteries need to be substituted.

★ The waste battery should be disposed properly.

Chapter 6 Wiring Diagram

6.1 Electric chart for 09K

Indoor unit

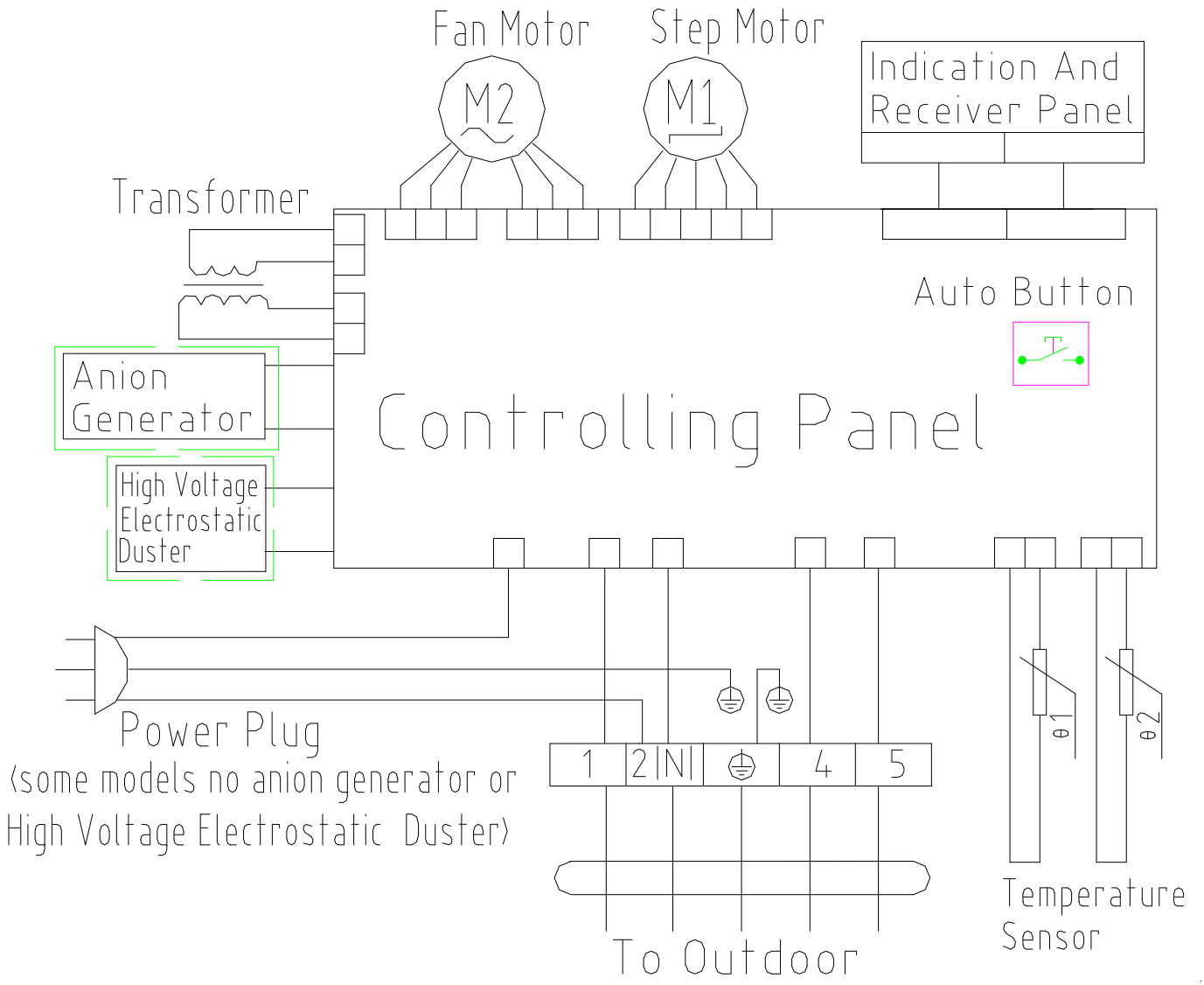

Outdoor unit

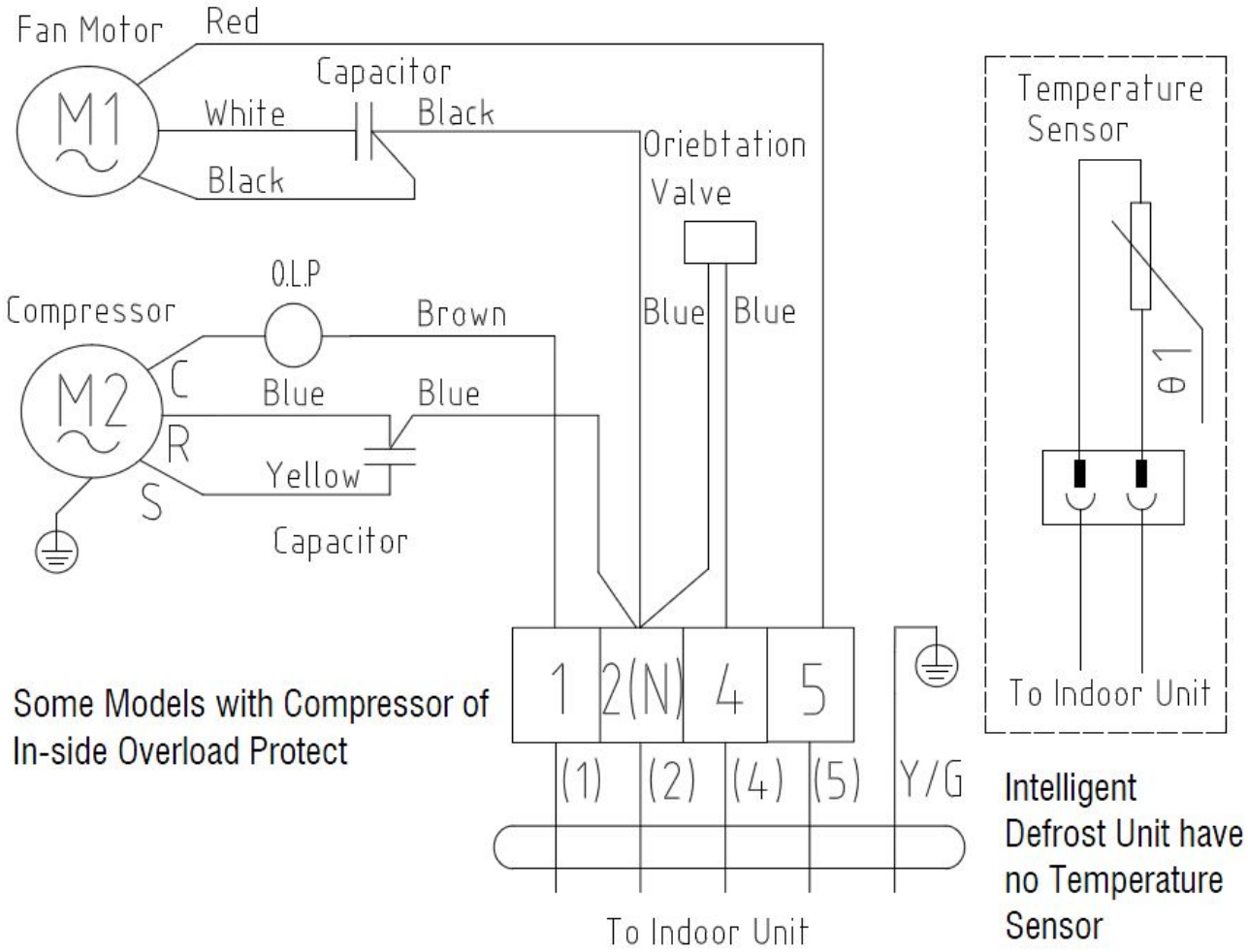

.

6.2 Electric chart for 12K

Indoor unit

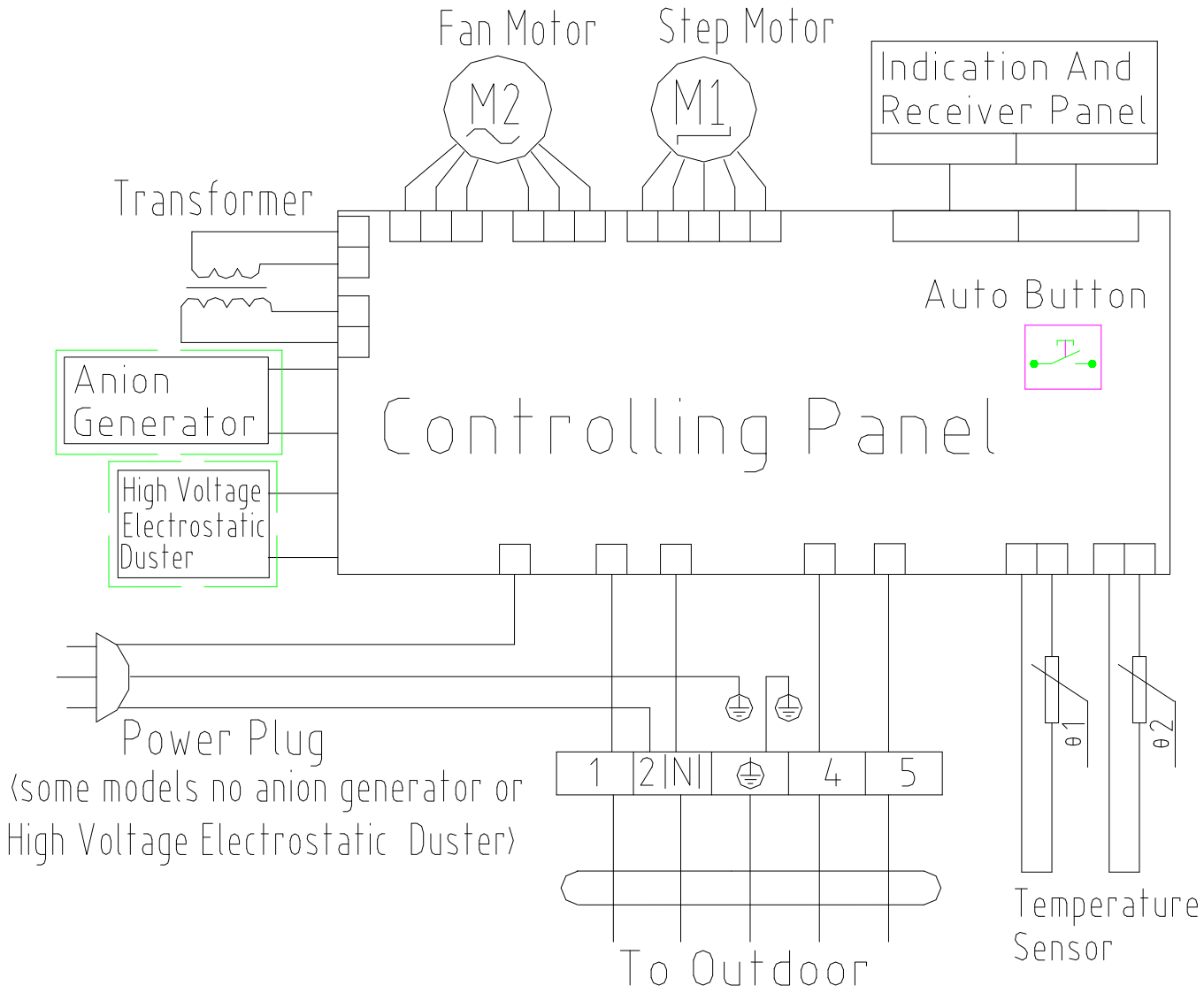

Outdoor unit

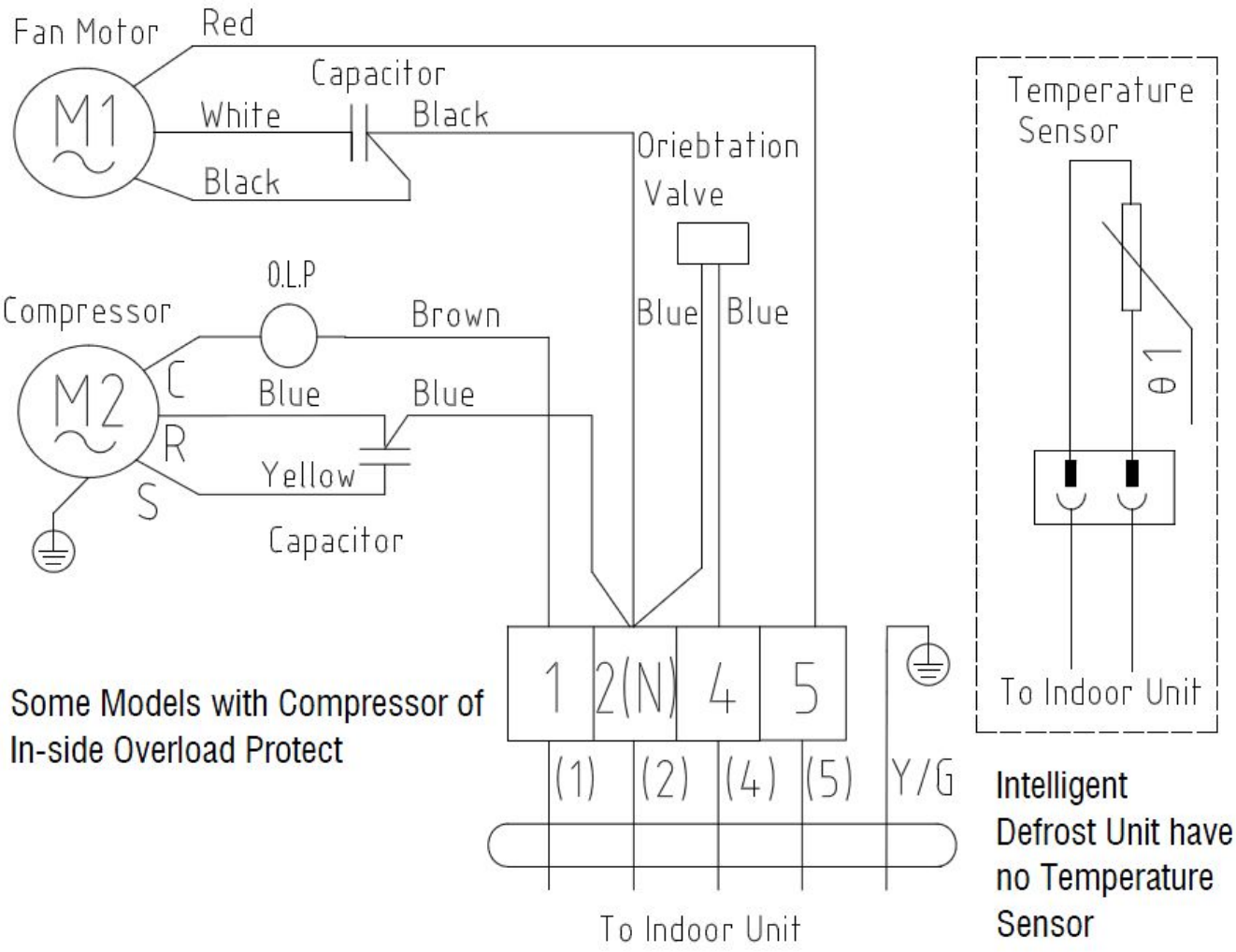

6.3 Electric chart for 18K

Indoor unit

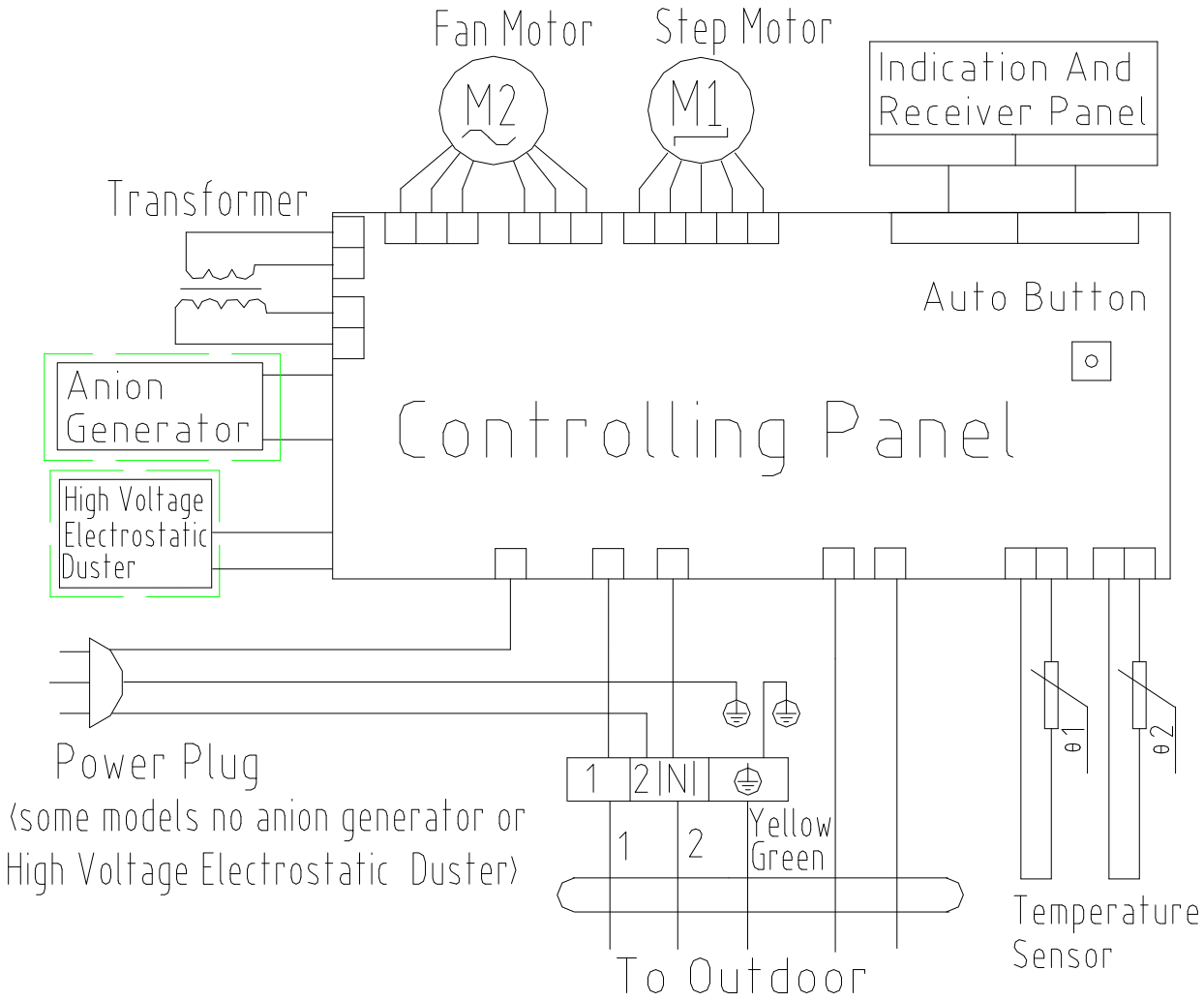

Outdoor unit

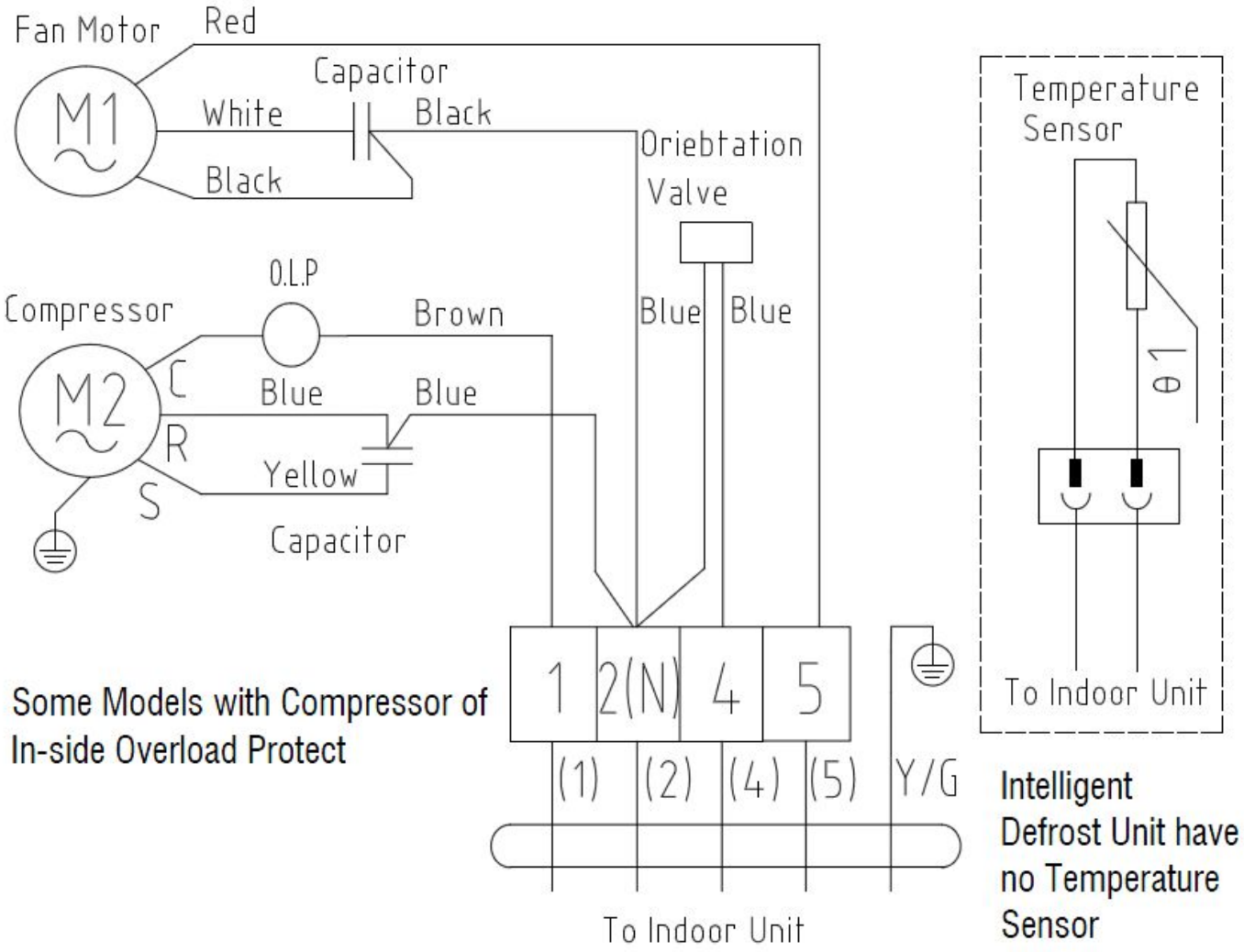

6.4 Electric chart for 24K

Indoor unit

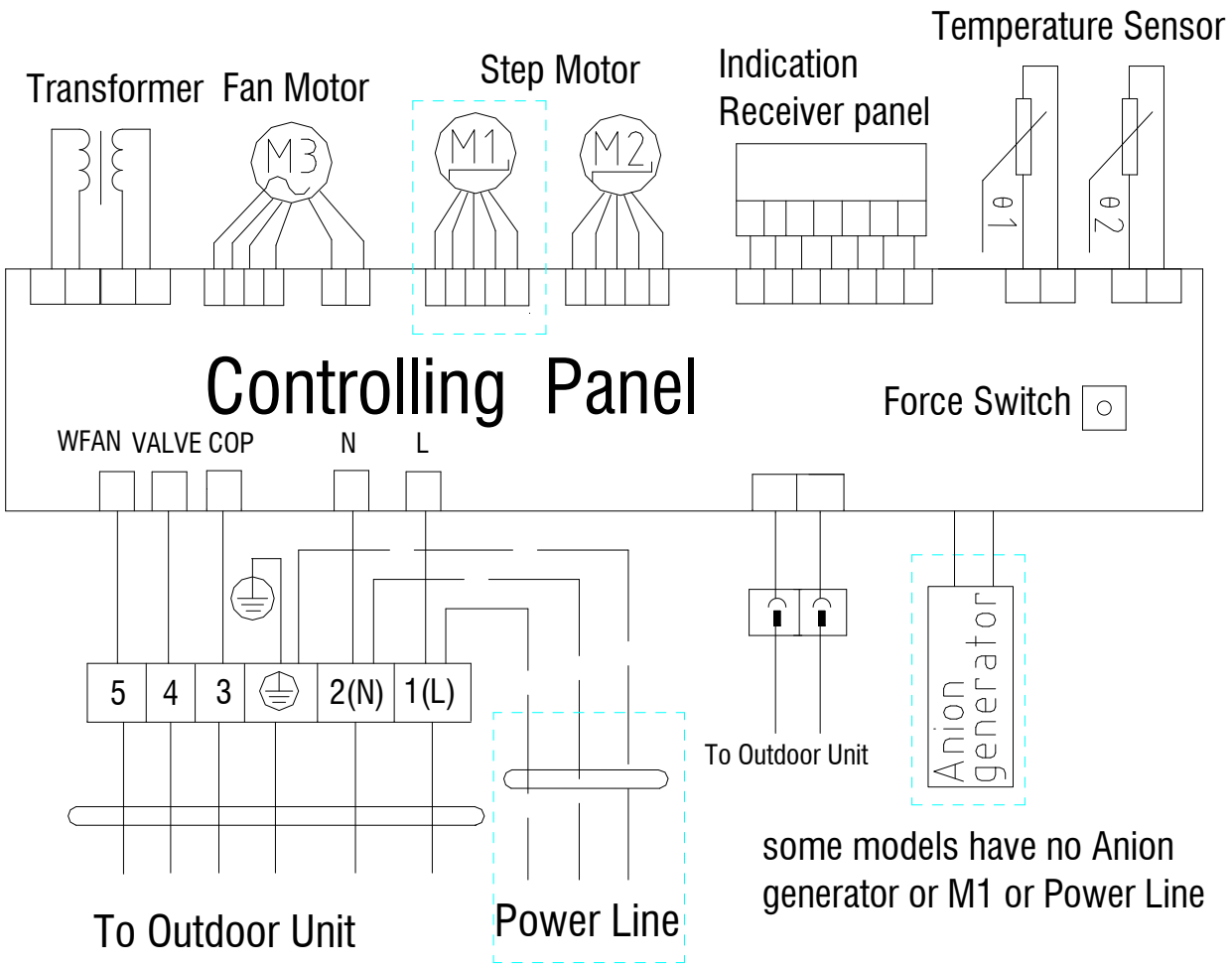

Outdoor unit

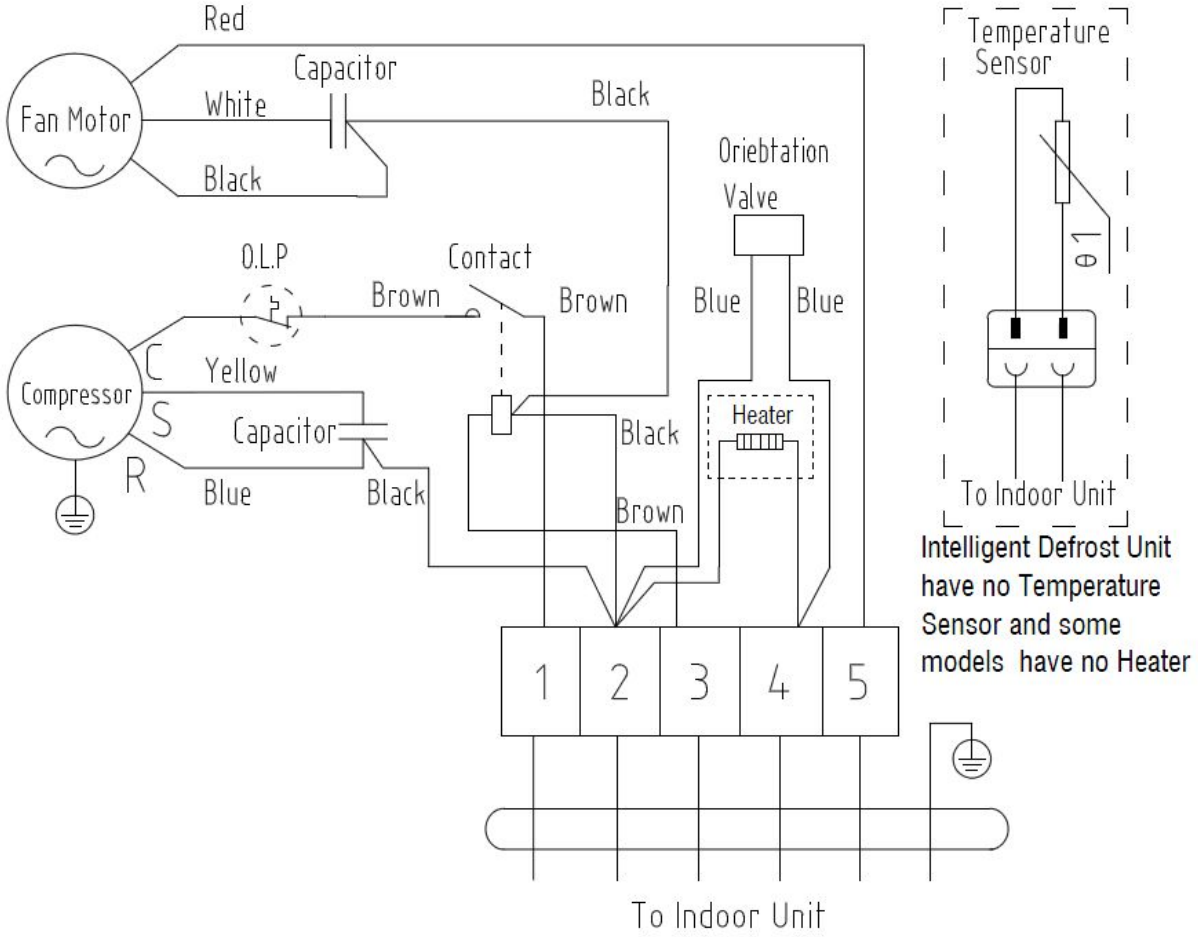

Chapter 7 Troubleshooting Guide

7.1 Error Code

No.	Error Code	Problem
1	E1	Temperature sensor of air intake fault
2	E2	Temperature sensor of outdoor coil fault
3	E3	Temperature sensor of indoor coil fault
4	E4	PG motor of indoor unit feedback fault

7.2 Troubleshooting Guide for 09-12K

1. The Foremost Inspecting Items

⑴The input voltage must be within +10% tolerance of the rated Voltage. If it is not the case, the air-conditioner will probably not work normally.

⑵Check the connecting cord between indoor unit and outdoor unit to see if it is properly connected. The connecting must be done according to the wiring diagram, please also notice that even different models may have the connecting cord of the same specification.

Please check if the marks at the connecting terminal and the marks on the cord can match, otherwise, the air-conditioner will not work normally.

(3)If the following phenomena are found, the problem is not from the air-conditioner itself.

NO.	Problems	Causes
1	The motor is heard operating but the air-conditioner dose not work when the indoor unit is powered on	Since the air-conditioner is powered on, it will come to working condition as long as you press the ON/OFF button of the remote control and the Signal is well received.
2	The compressor stops running but the indoor fan motor keeps working when it is at cooling mode with the indoor temperature higher than set temperature.	If you turn off the air-conditioner and restart it immediately, it will return to normal in 3 minutes, after that, the air-conditioner will automatically adjust the indoor fan speed to what you set.
3	The compressor works discontinuously at dehumidifying mode.	The air-conditioner will automatically control the working of the compressor according to the inside temperature
4	The air-conditioner does not work while the LED display is on.	The TIMER is set with the air-conditioner; it will be in hold on condition. If the TIMER setting is cancelled, the air-conditioner will return to normal working condition
5	The compressor works discontinuously at cooling and dehumidifying mode, and the indoor fan motor slows down.	The compressor stops internally or the fan motor slows down to prevent the indoor heat exchanger from being frozen.

2. No Power Display

(1)Items

a) Check if the input voltage is correct?

b) Check if the AC power supply connecting is correct?

c) Check if the output voltage of the manostat L7805 (IC2) is correct?

(2)Trouble shooting procedure

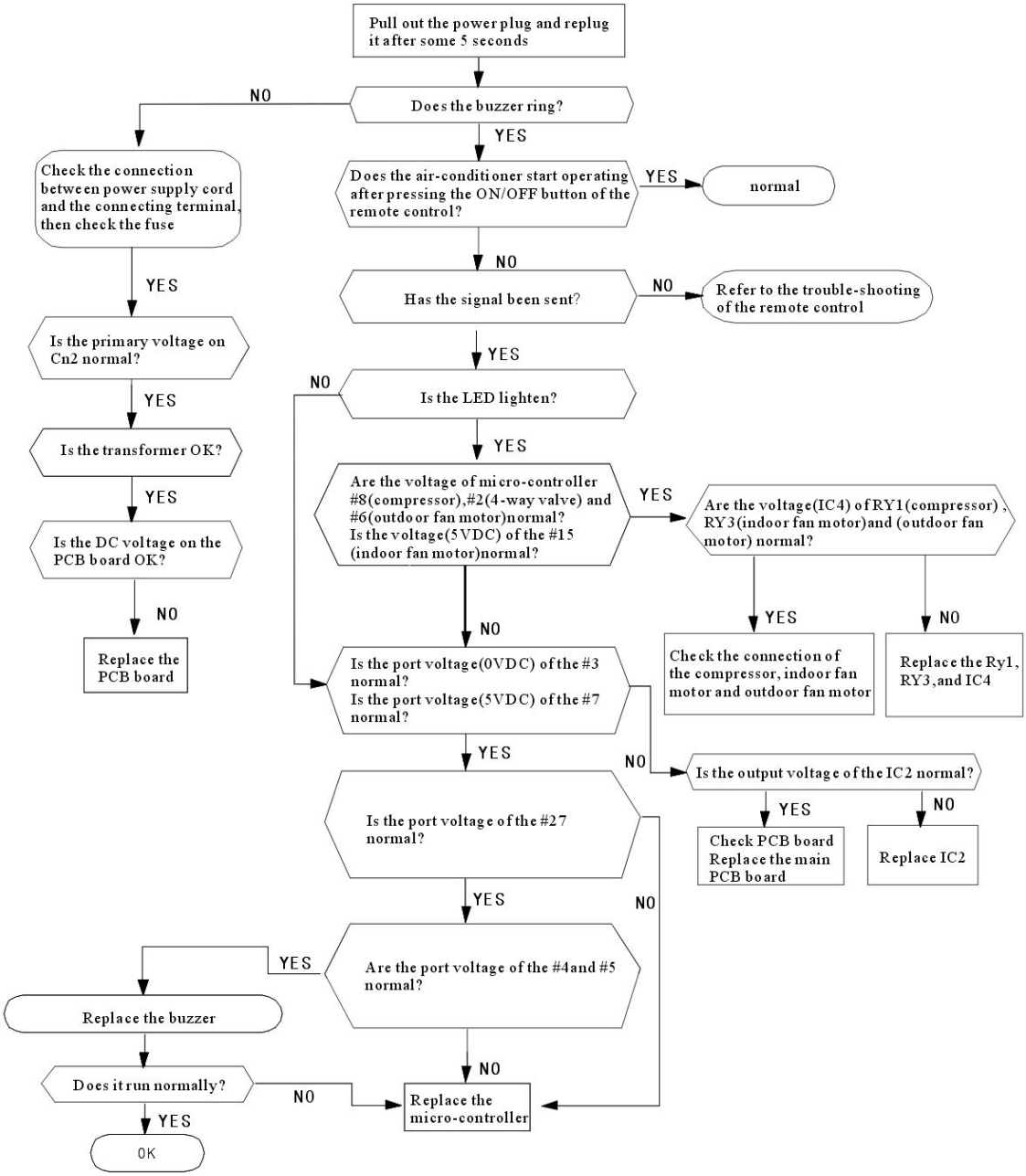

3. The Indoor Fan Motor Does Not Work

(1)Items

a) Check if the indoor fan motor is connected correctly to the connector (CN8)?

b) Check if the AC input voltage is correct?

c) Check if the IC of indoor fan motor is connected correctly to the connector (CN2)?

d) Check if the capacity of indoor fan motor is connected correctly to the connector (CN8)?

(2)Trouble shooting procedure

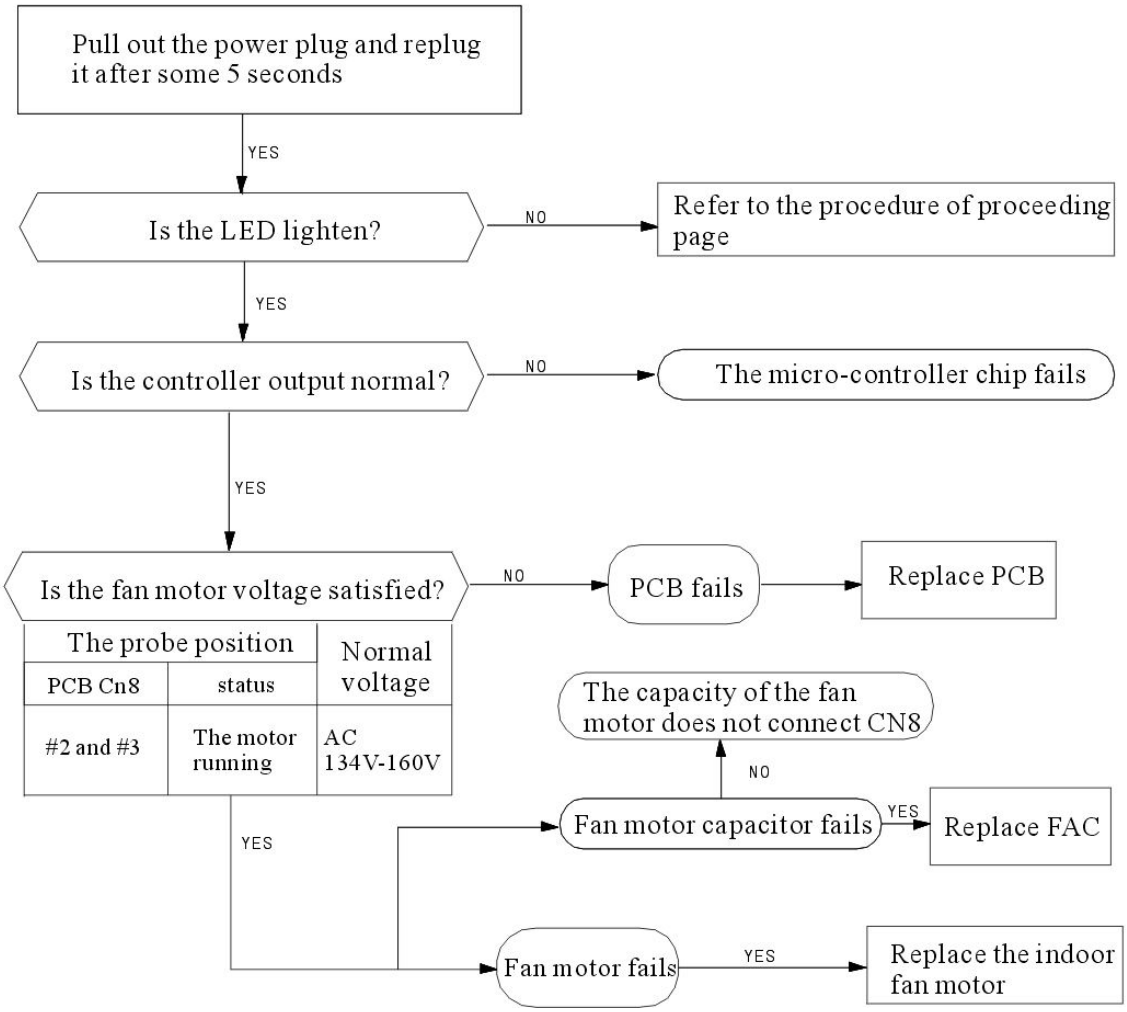

4. The Outdoor Unit Does Not Work

(1)Items

a) Check if the input voltage is correct?

b) Check if the wire connection of the outdoor connecting terminal is correct?

(2)Trouble shooting procedure

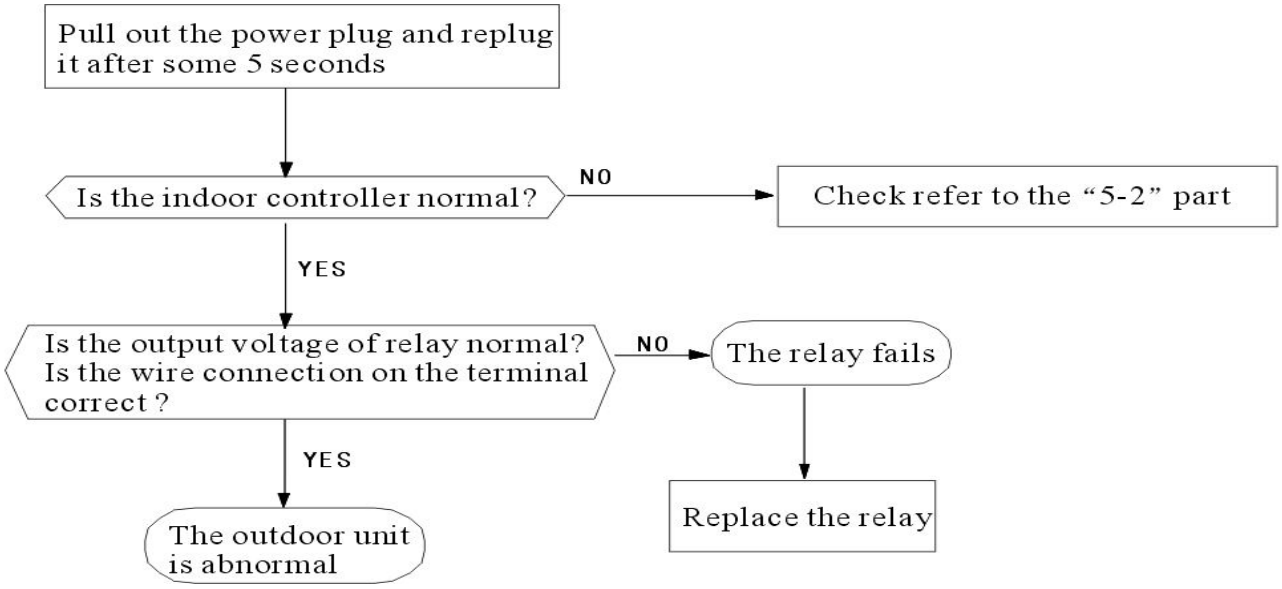

5. The Step Motor Does Not Work

(1)Items

a) Check if the input voltage is correct?

b) Check if the step motor controlling the up-down movement firmly connected to Cn2?

(2)Trouble shooting procedure

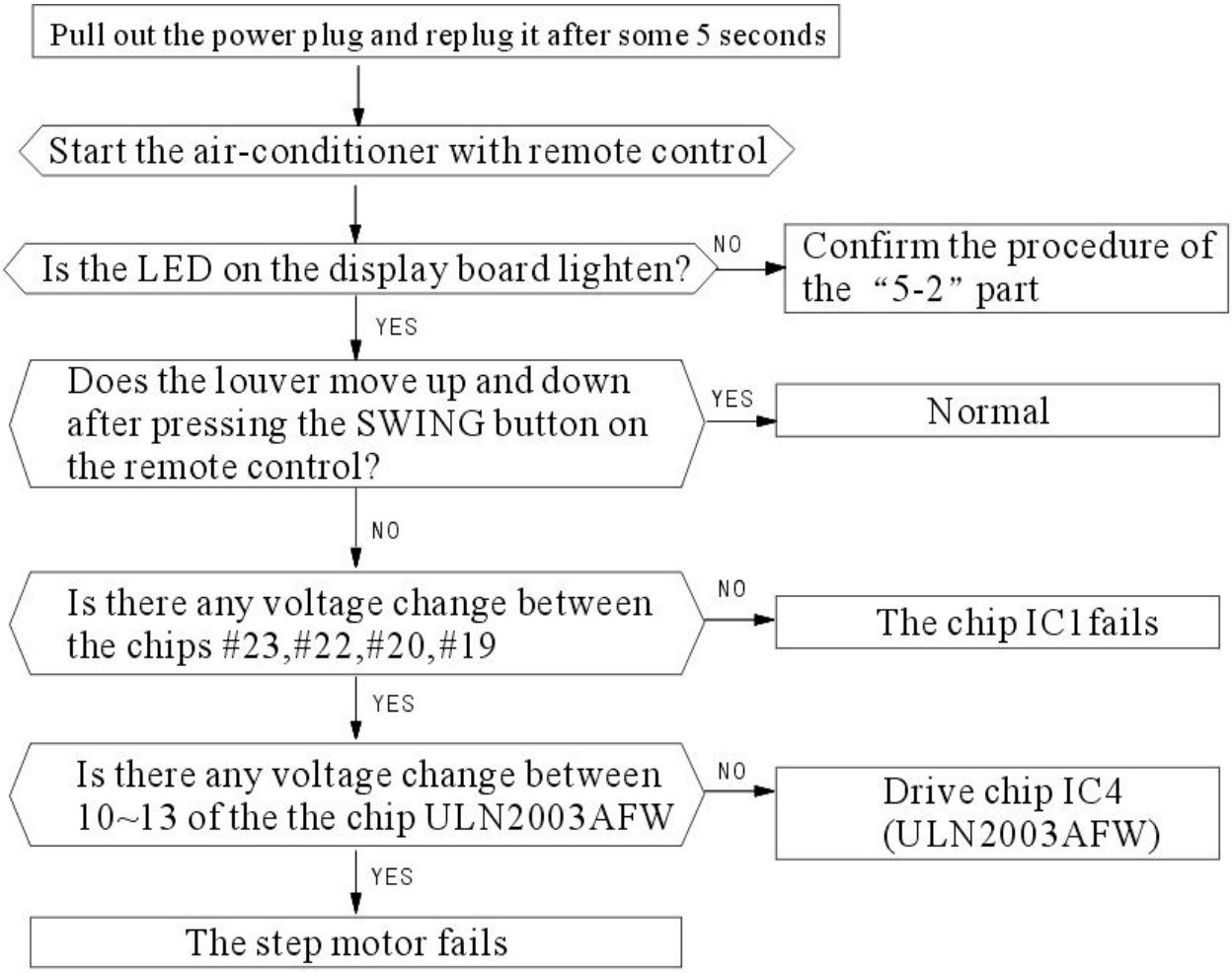

6. Heating Mode Can Work, But No Hot Air Blow

(1)Check if the set temperature is lower than the indoor temperature?

(2)Check if the indoor PCB is connected to the terminal correctly?

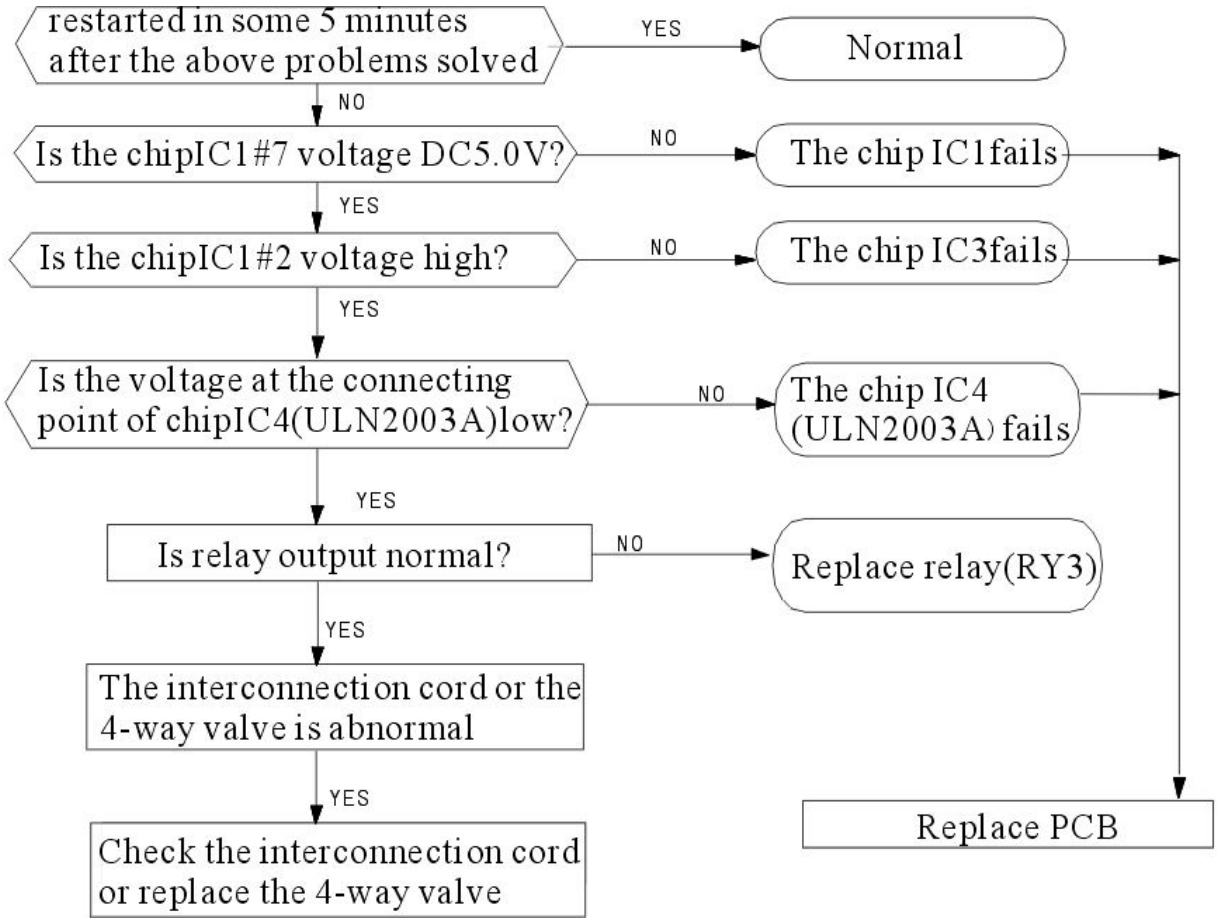

7. Remote Control Can Not Work

Trouble shooting procedure

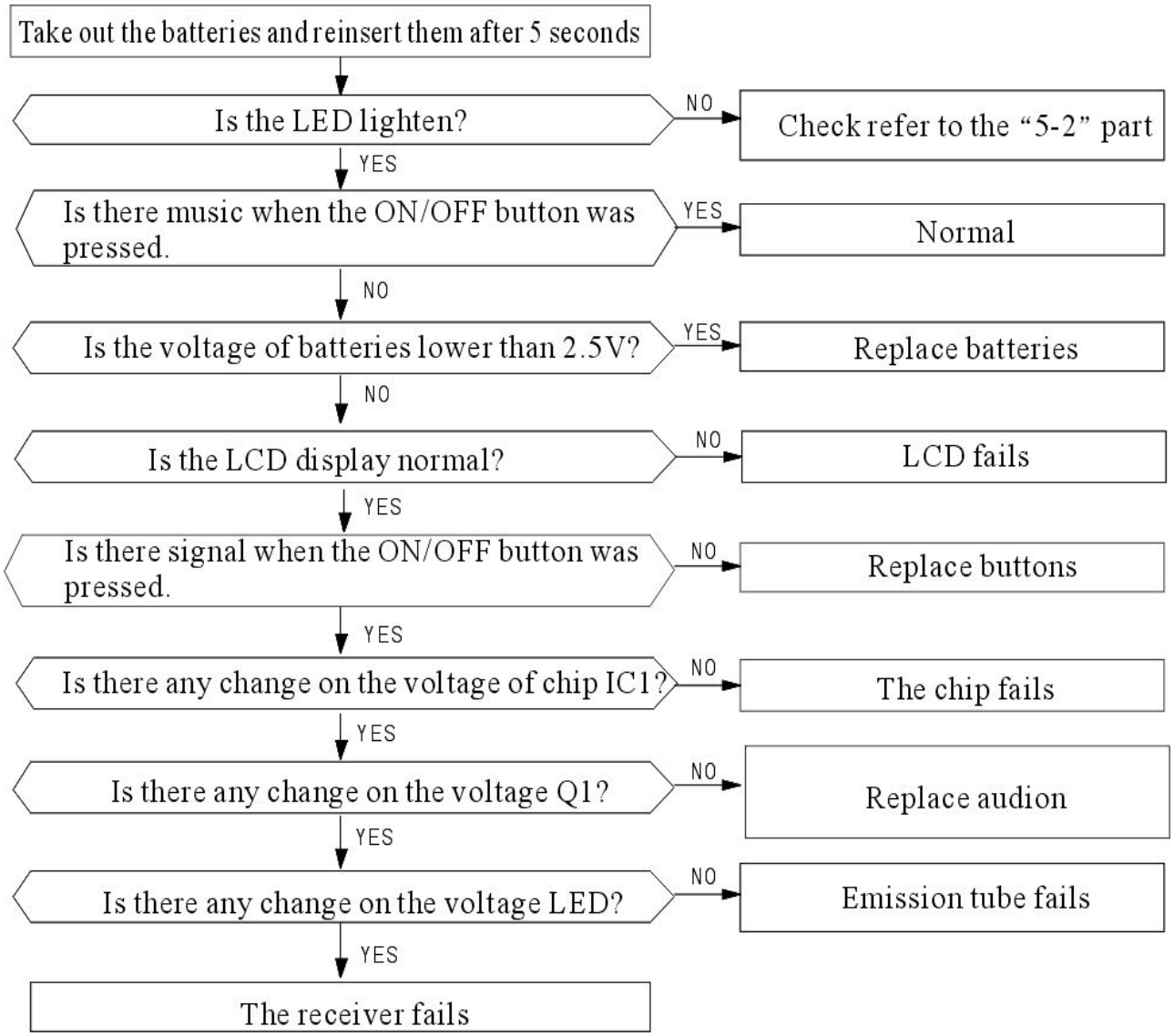

8. The Failure Analysis of the Main Parts

<table>
<tr><th>Part</th><th colspan="2">Analysis</th></tr>
<tr><td rowspan="3">Heat exchanger</td><td colspan="2">Measure resistance</td></tr>
<tr><td>Normal</td><td>
<table>
<tr><td>Environment temperature</td><td>15℃</td><td>20℃</td><td>25℃</td><td>30℃</td><td>35℃</td><td>40℃</td></tr>
<tr><td>Resistance of transformer(KΩ)</td><td>7.45</td><td>6.08</td><td>5</td><td>4.13</td><td>3.43</td><td>2.86</td></tr>
</table>
</td></tr>
<tr><td>Abnormal</td><td>∞：Turn-off；0Ω：Short-cut</td></tr>
<tr><td rowspan="5">The indoor fan motor</td><td colspan="2">Detecting the resistance between each connecting terminal</td></tr>
<tr><td>Normal</td><td>Environment temperature（10℃～30℃）
<table>
<tr><td colspan="2">Between</td><td>1</td><td>2</td><td>3</td></tr>
<tr><td>Blue、yellow</td><td>Main</td><td>410Ω ±10%</td><td>350Ω ±10%</td><td>370Ω ±10%</td></tr>
<tr><td>Blue、red</td><td>Auxillary</td><td>325Ω ±10%</td><td>270Ω ±10%</td><td>300Ω ±10%</td></tr>
<tr><td colspan="2">Input</td><td colspan="3">YYK13-4：13W YYK19-4：19W</td></tr>
</table>
</td></tr>
<tr><td>Abnormal</td><td>∞：Turn-off；0Ω：Short-cut</td></tr>
<tr><td colspan="2">Detecting the voltage between the signal wire of fan motor and ground</td></tr>
<tr><td>Normal</td><td>
<table>
<tr><td>Between</td><td>Voltage</td></tr>
<tr><td>Gray、Orange</td><td>0.5V～4.5V</td></tr>
<tr><td>Yellow、Orange</td><td>5V</td></tr>
</table>
</td></tr>
<tr><td>Abnormal</td><td>voltage<0, voltage>5 is abnormal</td></tr>
<tr><td rowspan="3">Step motor</td><td>Normal</td><td>Environment temperature（10℃～30℃）
<table>
<tr><td colspan="2" rowspan="2">Between</td><td>1</td><td>2</td><td>–</td></tr>
<tr><td>24BYJ48</td><td>35BYJ412B</td><td>–</td></tr>
<tr><td>Blue、yellow</td><td>–</td><td>Above 300Ω</td><td>Around 120Ω</td><td>–</td></tr>
<tr><td>–</td><td>–</td><td>–</td><td>–</td><td>–</td></tr>
<tr><td colspan="2">Input</td><td>1.5W</td><td>–</td><td>–</td></tr>
</table>
</td></tr>
<tr><td>Abnormal</td><td>∞：Turn-off；0Ω：Short-cut</td></tr>
<tr><td rowspan="3">The outdoor fan motor</td><td colspan="2">Detecting the resistance between the red wire and every connecting end</td></tr>
<tr><td>Normal</td><td>When the temperature is20℃～30℃ ,around 300Ω and 120Ω</td></tr>
<tr><td>Abnormal</td><td>∞：Turn-off；0Ω：Short-cut</td></tr>
</table>

7.3 Troubleshooting Guide for 18-36K

1. The Foremost Inspecting Items

⑴The input voltage must be within +10% tolerance of the rated Voltage. If it is not the case, the air-conditioner will probably not work normally.

⑵Check the connecting cord between indoor unit and outdoor unit to see if it is properly connected. The connecting must be done according to the wiring diagram, please also notice that even different models may have the connecting cord of the same specification.

Please check if the marks at the connecting terminal and the marks on the cord can match, otherwise, the air-conditioner will not work normally.

⑶If the following phenomena are found, the problem is not from the air-conditioner itself.

NO.	Problems	Causes
1	The motor is heard operating but the air-conditioner dose not work when the indoor unit is powered on	Since the air-conditioner is powered on, it will come to working condition as long as you press the ON/OFF button of the remote control and the signal is well received.
2	The compressor stops running but the indoor fan motor keeps working when it is at cooling mode with the indoor temperature higher than set temperature.	If you turn off the air-conditioner and restart it immediately, it will return to normal in 3 minutes, after that, the air-conditioner will automatically adjust the indoor fan speed to what you set.
3	The compressor works discontinuously at dehumidifying mode.	The air-conditioner will automatically control the working of the compressor according to the inside temperature
4	The air-conditioner does not work while the LED display is on.	The TIMER is set with the air-conditioner; it will be in hold on condition. If the TIMER setting is cancelled, the air-conditioner will return to normal working condition.
5	The compressor works discontinuously at cooling and dehumidifying mode, and the indoor fan motor slows down.	The compressor stops internally or the fan motor slows down to prevent the indoor heat exchanger from being frozen.

2. No Power Display

⑴Items

①Check if the input voltage is correct?

②Check if the AC power supply connecting is correct?

③Check if the output voltage of the manostat L7805(IC2)is correct?

⑵Trouble shooting procedure

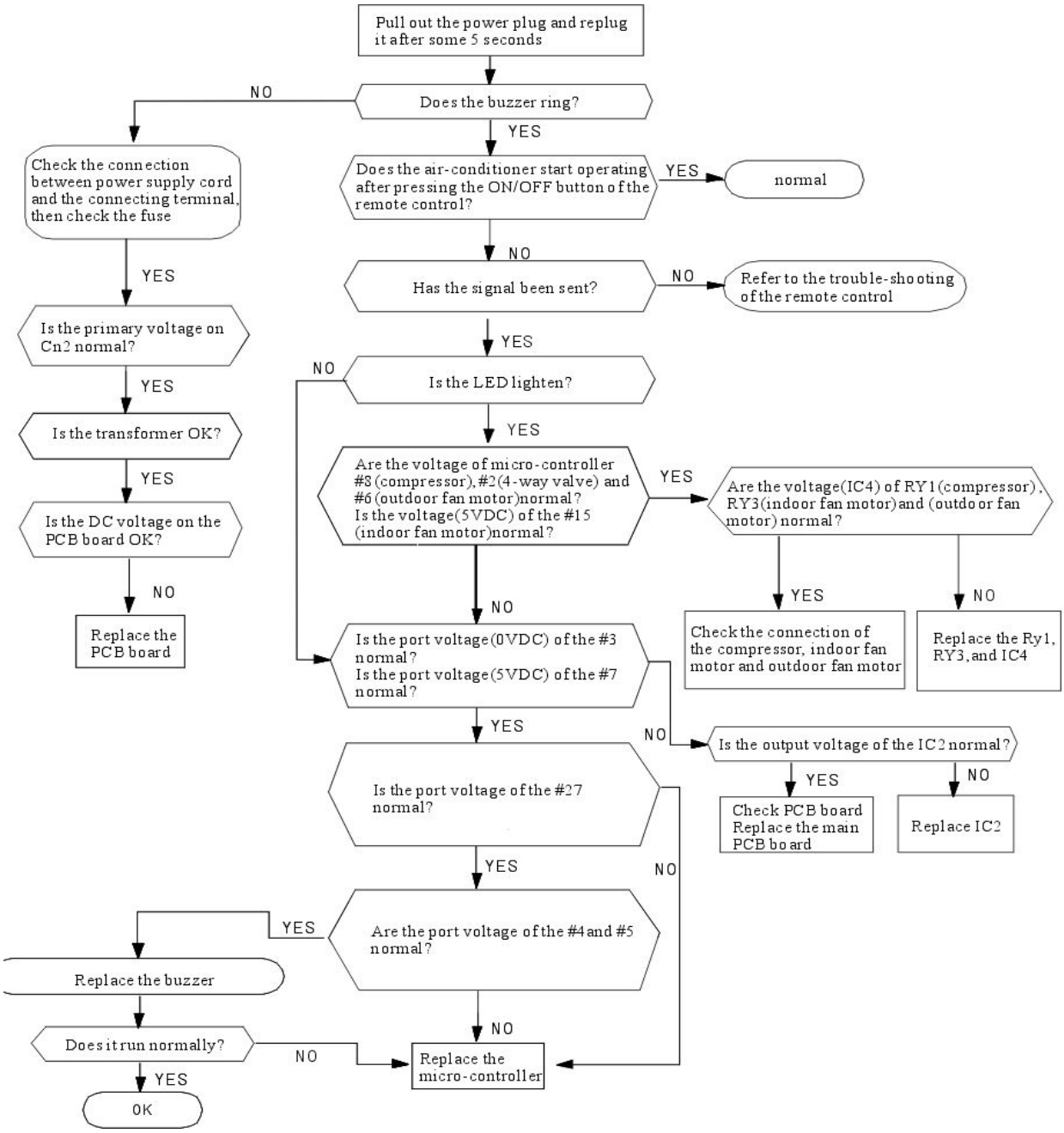

3. The Indoor Fan Motor Does Not Work

(1)Items

①Check if the indoor fan motor is connected correctly to the connector(CN8)?

②Check if the AC input voltage is correct?

③ Check if the IC of indoor fan motor is connected correctly to the connector(CN2)?

④Check if the capacity of indoor fan motor is connected correctly to the connector(CN8)?

(2)Trouble shooting procedure

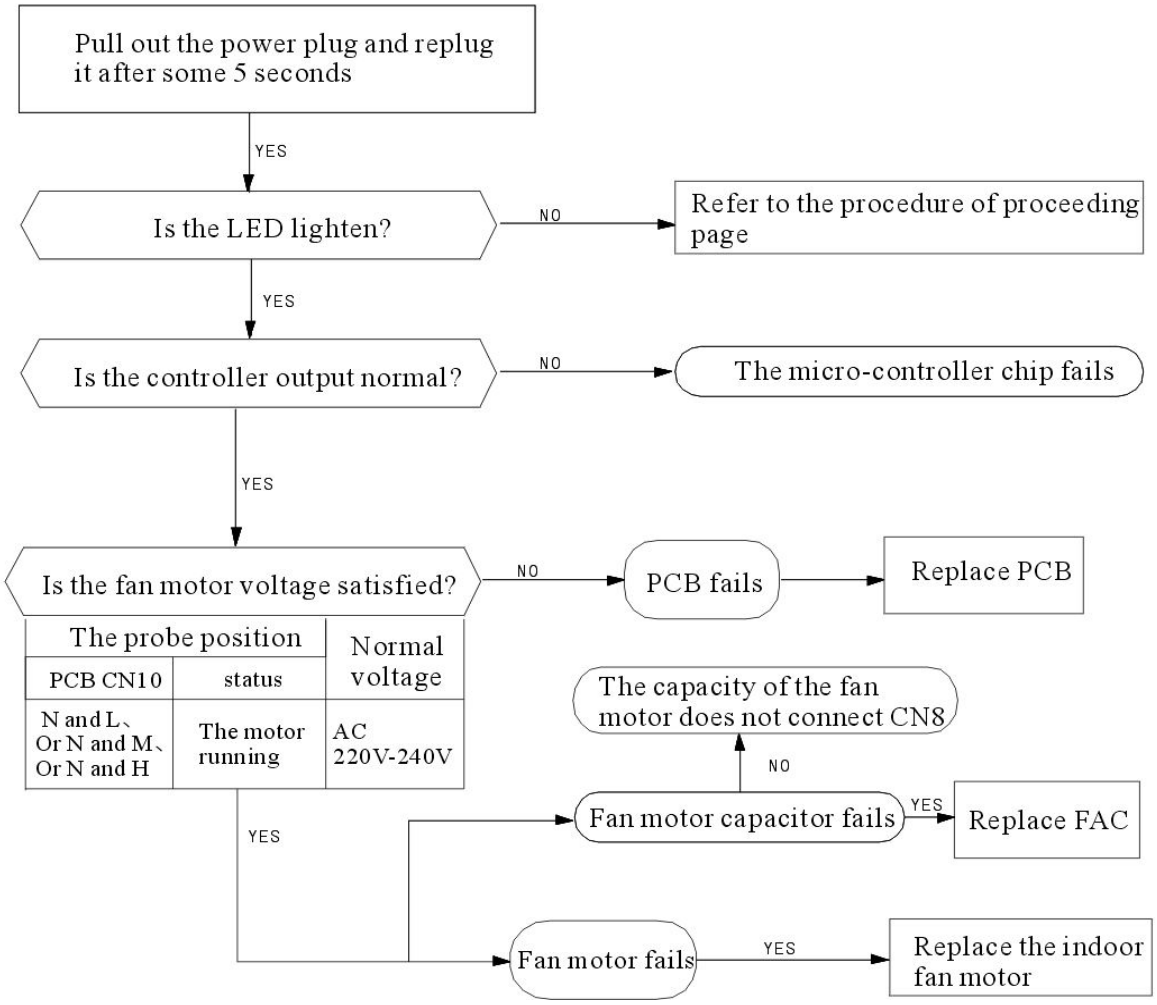

4. The Outdoor Unit Does Not Work

(1)Items

①Check if the input voltage is correct?

②Check if the wire connection of the outdoor connecting terminal is correct?

(2)Trouble shooting procedure

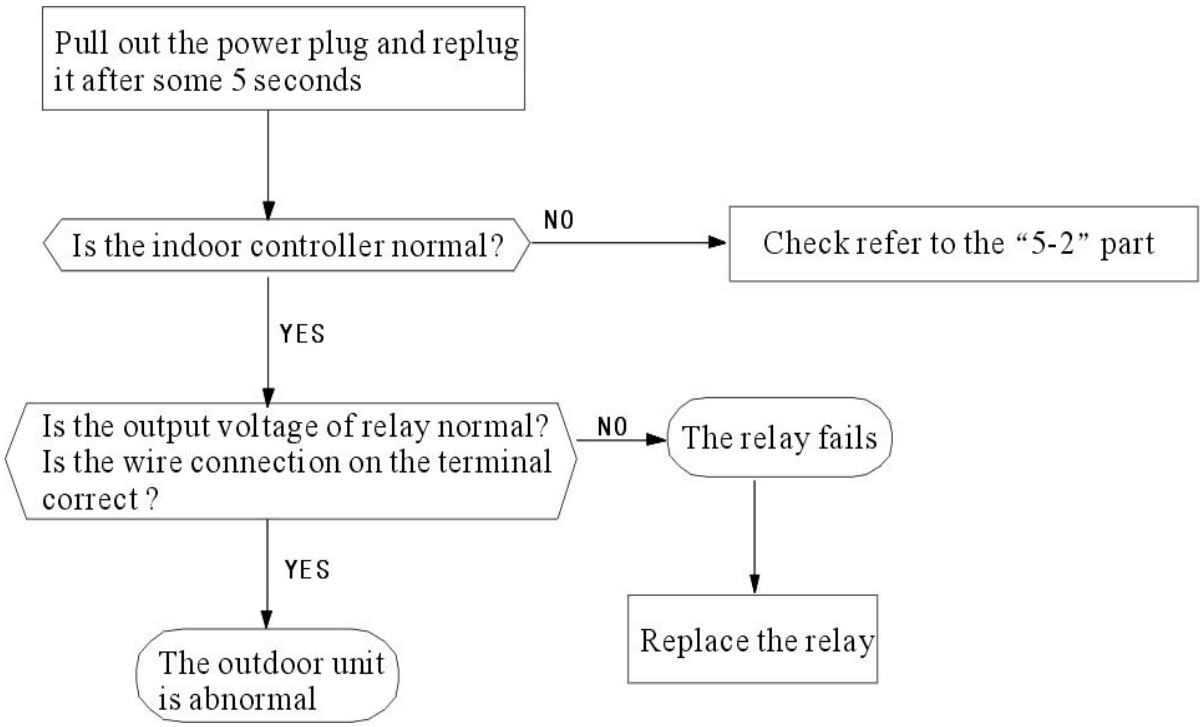

5. The Step Motor Does Not Work

⑴Items

①Check if the input voltage is correct?

②Check if the step motor controlling the up-down movement firmly connected to Cn2?

⑵Trouble shooting procedure

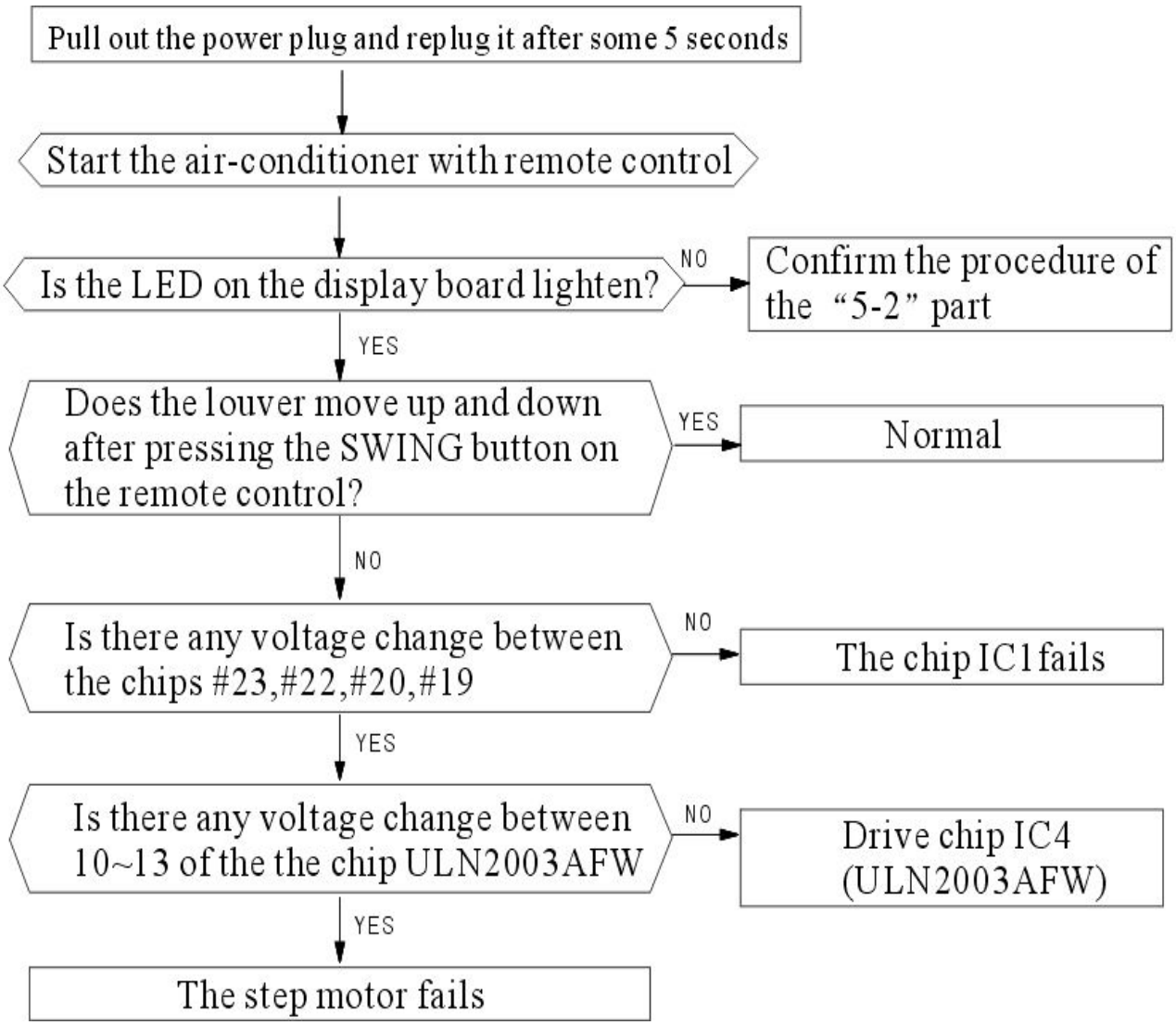

6. Heating Mode Can Work, But No Hot Air Blow

(1)Check if the set temperature is lower than the indoor temperature?

(2)Check if the indoor PCB is connected to the terminal correctly?

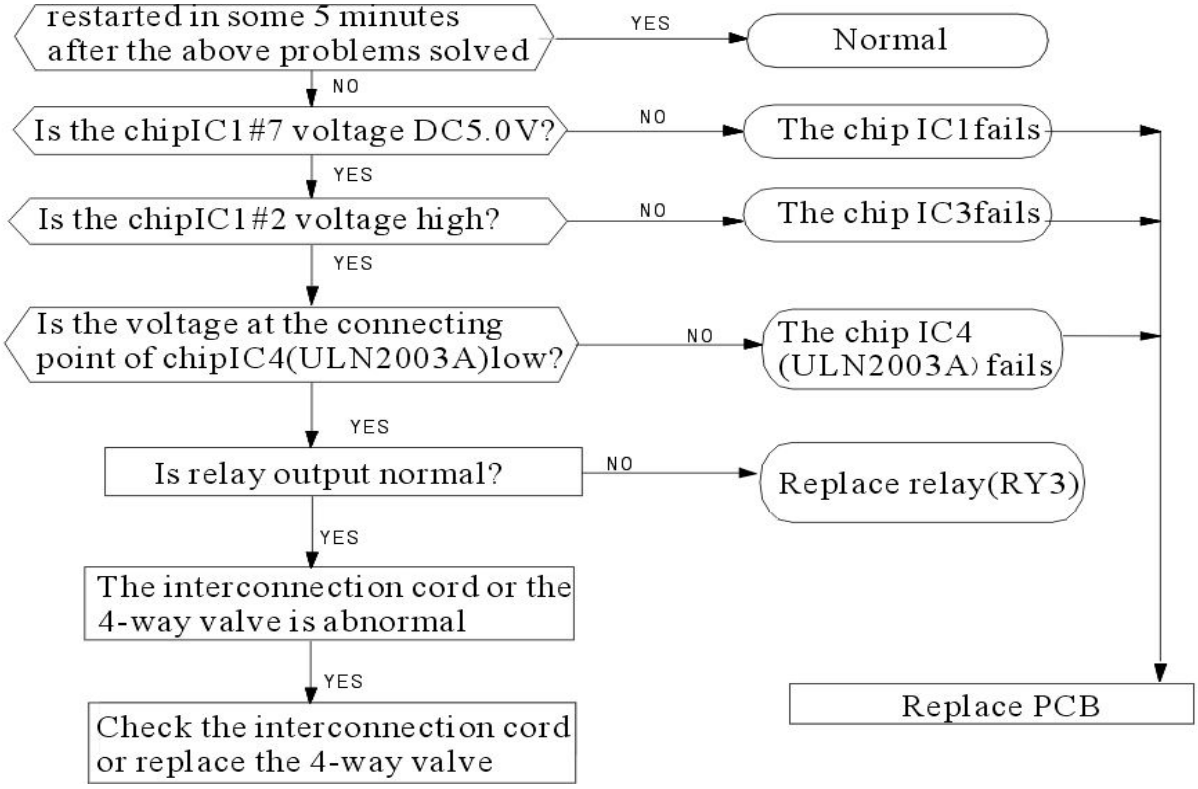

7. Remote Control Can Not Work

Trouble shooting procedure

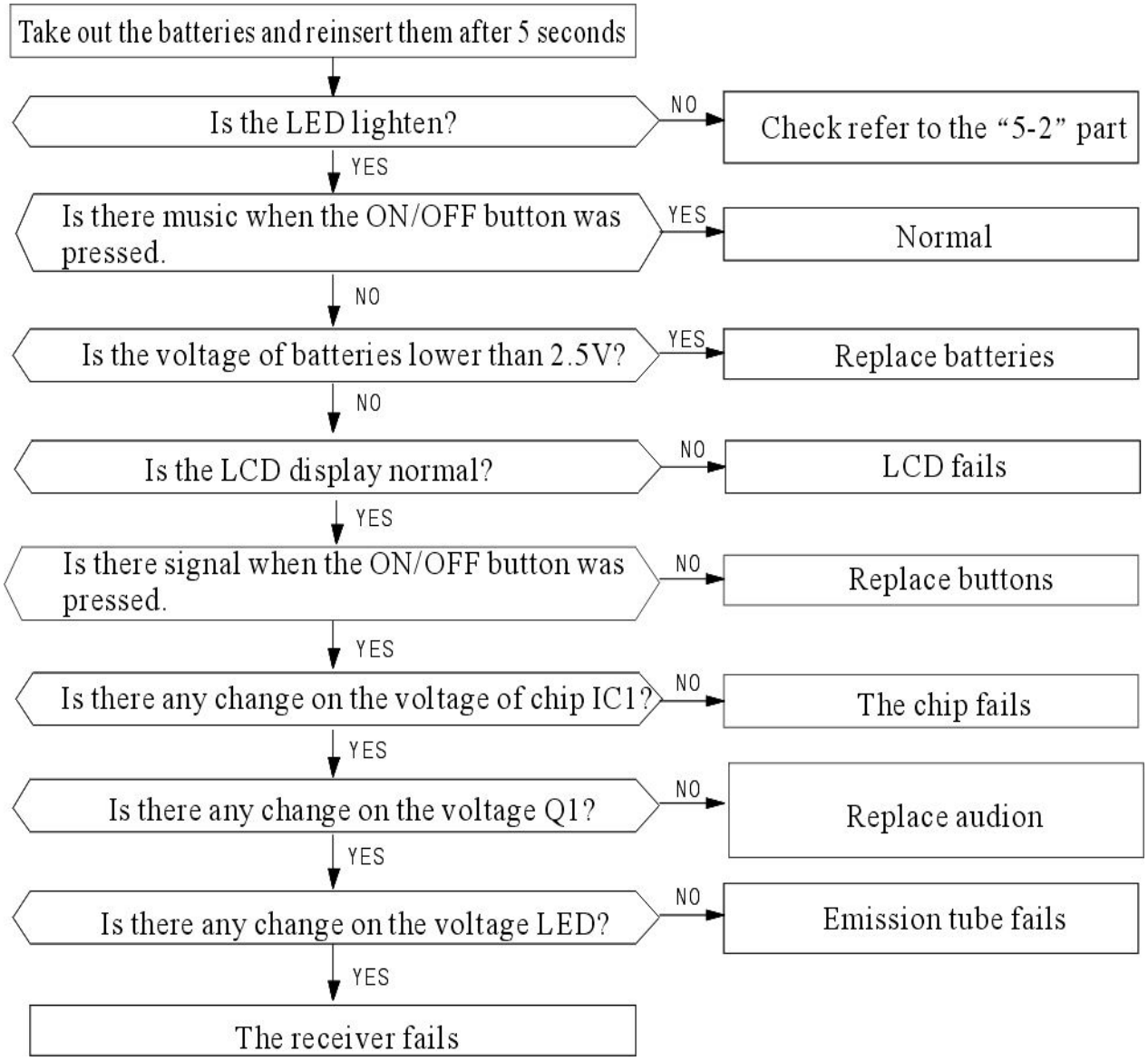

8. The Failure Analysis of the Main Parts

<table>
<tr><th>Part</th><th colspan="2">Analysis</th></tr>
<tr><td rowspan="3">Transformer
Heat exchanger</td><td colspan="2">Measure resistance</td></tr>
<tr><td>Normal</td><td>
<table>
<tr><td>Environment temperature</td><td>15℃</td><td>20℃</td><td>25℃</td><td>30℃</td><td>35℃</td><td>40℃</td></tr>
<tr><td>Resistance of transformer(KΩ)</td><td>7.45</td><td>6.08</td><td>5</td><td>4.13</td><td>3.43</td><td>2.86</td></tr>
</table>
</td></tr>
<tr><td>Abnormal</td><td>∞：Turn-off；0Ω：Short-cut</td></tr>
<tr><td rowspan="3">Step motor</td><td>Normal</td><td>Environment temperature（10℃～30℃）
<table>
<tr><td colspan="2" rowspan="2">Between</td><td>1</td><td>2</td><td>–</td></tr>
<tr><td>24BYJ48</td><td>35BYJ412B</td><td>–</td></tr>
<tr><td>Blue、yellow</td><td>–</td><td>Above300Ω</td><td>Around120Ω</td><td>–</td></tr>
<tr><td>–</td><td>–</td><td>–</td><td>–</td><td>–</td></tr>
<tr><td colspan="2">Input</td><td>1.5W</td><td>–</td><td>–</td></tr>
</table>
</td></tr>
<tr><td>Abnormal</td><td>∞：Turn-off；0Ω：Short-cut</td></tr>
<tr><td rowspan="3">The outdoor fan motor</td><td colspan="2">Detecting the resistance between the red wire and every connecting end</td></tr>
<tr><td>Normal</td><td>When the temperature is20℃～30℃ ,around 300Ω and 120Ω</td></tr>
<tr><td>Abnormal</td><td>∞：Turn-off；0Ω：Short-cut</td></tr>
</table>

Chapter 8 Exploded Views & Parts List

8.1 Indoor unit for 09/12K

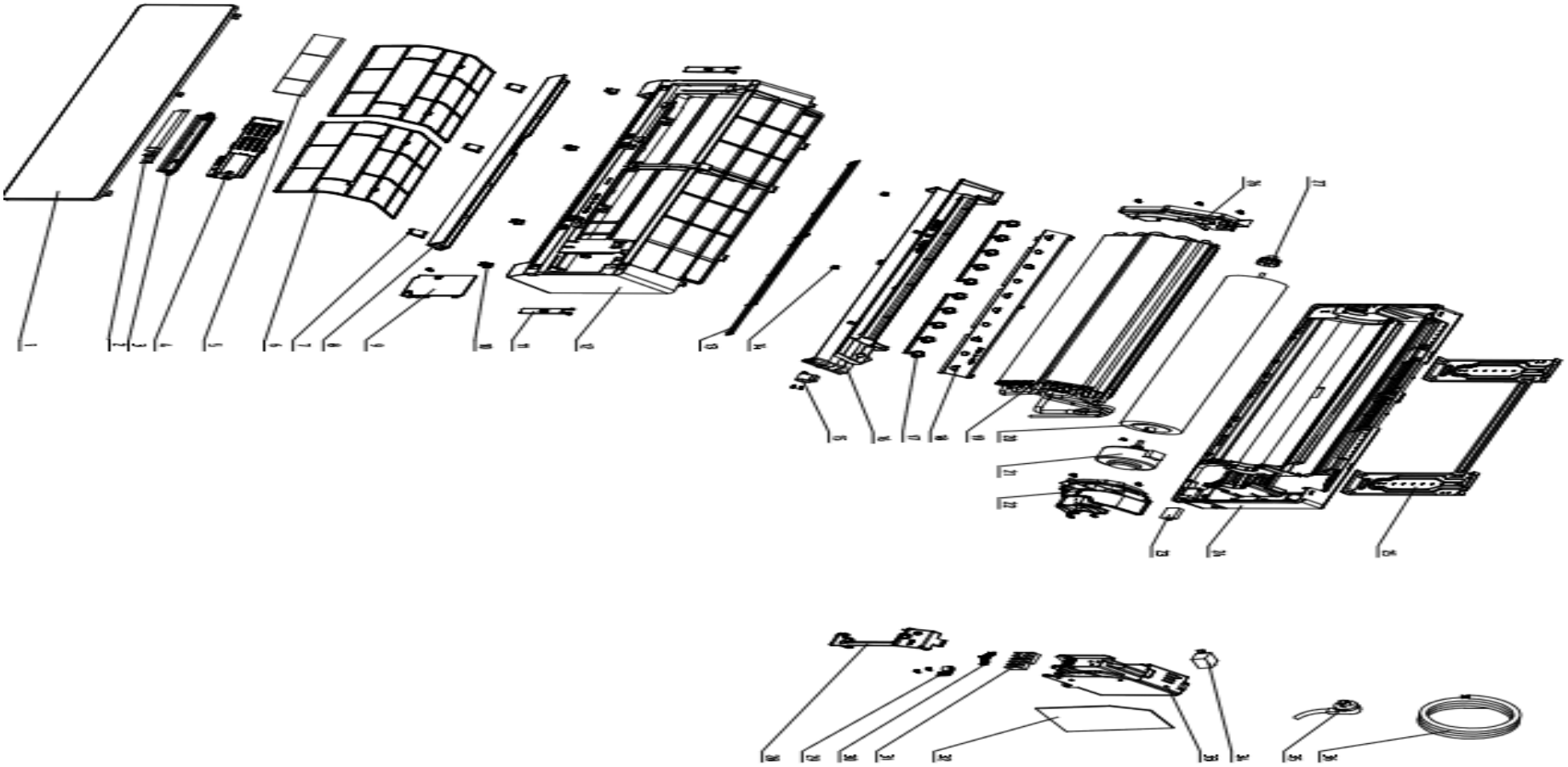

Parts List of Indoor unit for 09/12K

Exploded View No	Chinese Name	Name	Pcs	Part No.
1	面板	Panel	1	
2	显示灯板组件	Display board	1	
3	显示灯座	Indication lamp holder	1	
4	静电除尘器	Electrostatic precipitator	1	
5	杀菌网	Sterilization filter	1	
6	过滤网组件	Filter	2	
7	中框螺钉盖	In box screw cap	3	
8	导风门	Horizontal air-blade	1	
9	中框盖	Cover of medium frame	1	
10	面板卡口	Panel clasper	1	
11	面板支撑杆	Stand bar	2	
12	中框	Medium frame	1	
13	钢丝网罩	Wire mesh enclosure	1	
14	轴套	sleeve	1	
15	步进电机	Step motor	1	
16	导风架	Air-vent holder	1	
17	导风叶片	Vertical air-blade	2	
18	导风叶片托板	Bracket of airflow vanes	1	
19	蒸发器组件	Evaporator assembly	1	
20	贯流风叶	Cross flow fan	1	
21	电机	Fan motor	1	
22	电机压盖	Motor cover	1	
23	负离子	Negative ion	1	
24	底座	Chassis	1	
25	挂板组件	Mounting plate	1	
26	蒸发器左支架	Left plastic-crutch for evaporator	1	
27	橡胶轴承座	Bearing holder for indoor fan	1	
28	电控盒盖	Cover of controller box	1	
29	电源线抱攀	Power supply clamp	1	
30	电源连接线压板	Connection cable clamp	1	
31	端子板	Terminal board	1	
32	主控板	Main PCB	1	
33	电控盒	Controller box	1	
34	变压器	Transformer	1	
35	电源线	Power supply	1	
36	电源连接线	Connection cable	1	

8.2 Outdoor unit for 09K

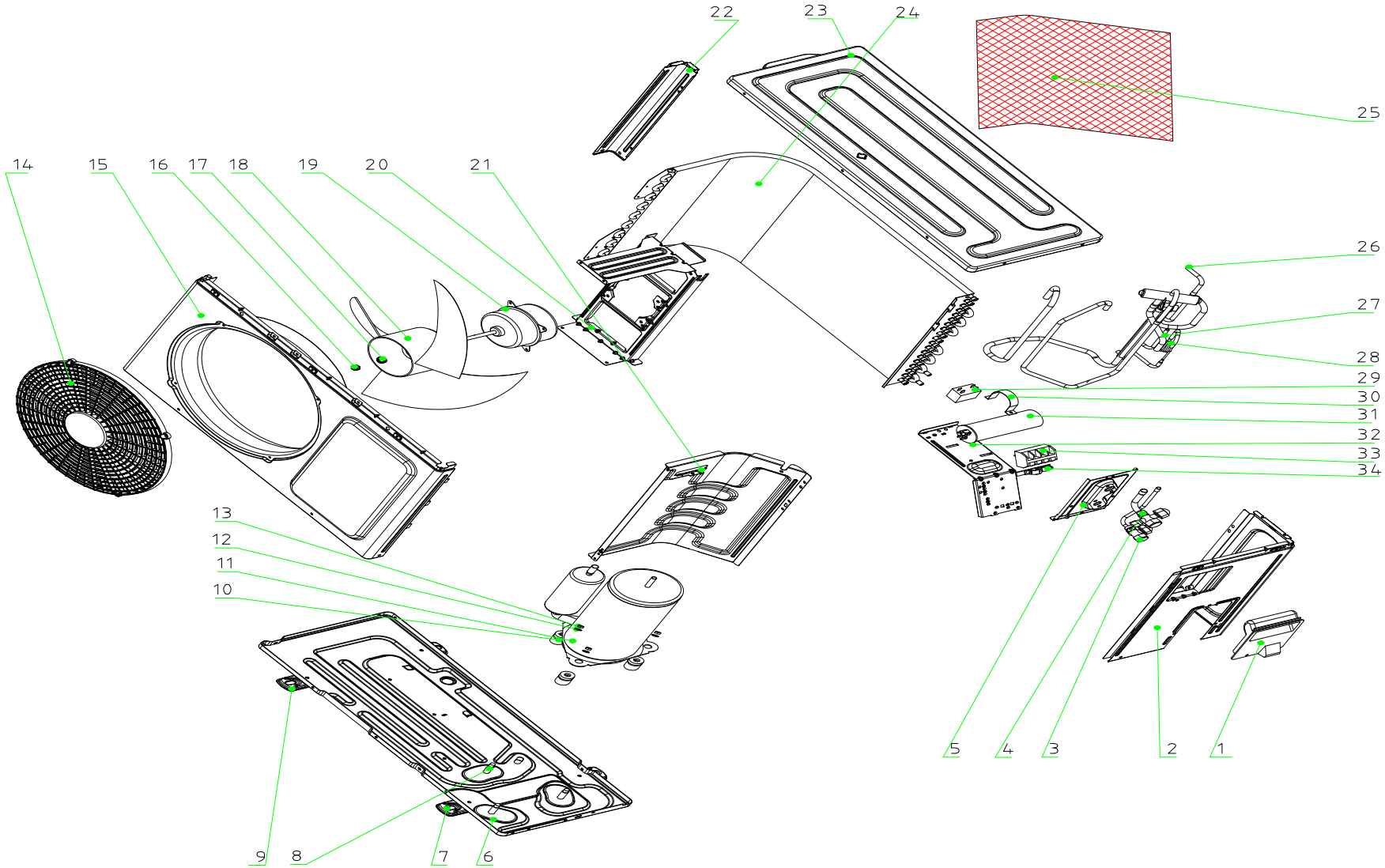

Parts List of Outdoor unit for 09K

Exploded View No	Chinese Name	Name	Pcs	Part No.
1	电器盖板	Electric cover	1	
2	右侧板	Right side plate	1	
3	截止阀 DG10	Gas valve assembly	1	
4	截止阀 DG4	Liquid valve assembly	1	
5	阀板	Valve plate	1	
6	底盘	Chassis assembly	1	
7	右底脚	right footing	1	
8	泵脚螺栓	Pump bolt	3	
9	左底脚	left footing	1	
10	橡胶减震垫	rubber cushion	3	
11	压缩机	Compressor assembly	1	
12	大垫圈	Big washer	3	
13	六角螺母	Hexagonal nut	3	
14	面板网罩	Front net	1	
15	面板	Panel	1	
16	六角螺母	Hexagonal nut	1	
17	轻型弹簧垫圈	Light spring washer	1	
18	室外风叶（轴流）	Propeller fan	1	
19	是外风叶电机	Fan motor	1	
20	电机架	Holder for fan motor	1	
21	隔风立板	Partition plate	1	
22	左侧支撑板	Left clapboard	1	
23	顶盖板	Top cover board	1	
24	冷凝器组件	Condensor assembly	1	
25	塑料网罩	Front net	1	
26	冷凝器进气管组件	Condenser inlet pipe assembly	1	
27	四通阀管路组件	4-Ways valve pipe assembly	1	
28	毛细管管路组件	Capillary assembly	1	
29	风机电容	Fan motor capacitor	1	
30	电容抱攀	Capacitor clamp	1	
31	压缩机电容	Compressor capacitor	1	
32	电器架	Holder for E-parts	1	
33	端子板	Terminal board	1	
34	电源连接线压板	electricity cord clamp	1	

8.3 Outdoor unit for 12K

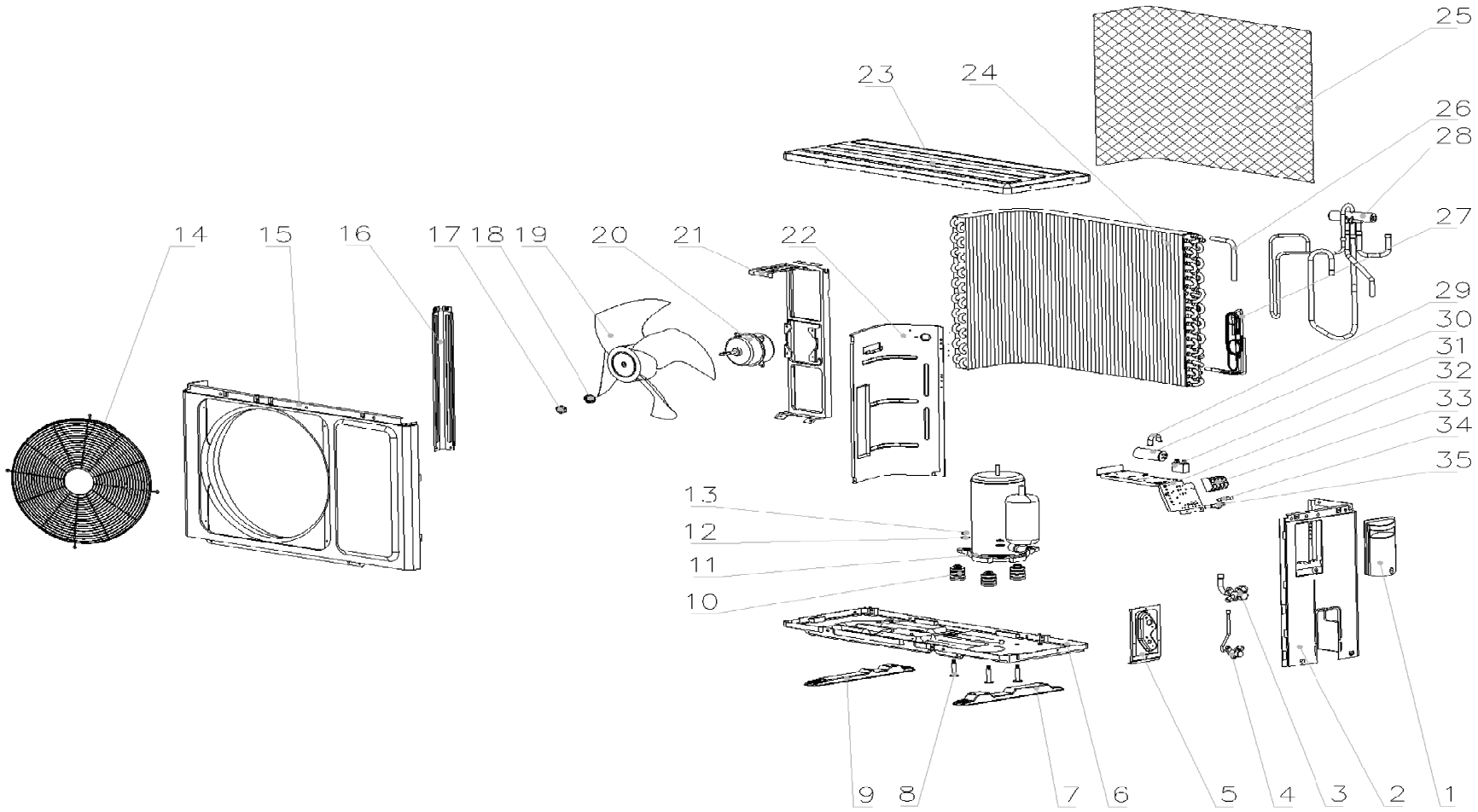

Parts List of Outdoor unit for 12K

Exploded View No	Chinese Name	Name	Pcs	Part No.
1	电器盖板	Cover for electric unit	1	
2	右侧板	Right-hand board	1	
3	气阀	Gas valve	1	
4	液阀	Liquid valve	1	
5	阀板	Valve panel	1	
6-9	底盘组件	Outdoor chassis	1	
10-11	压缩机组件	Compressor assembly	1	
12-13	垫圈及螺母	Type hex nuts and big gasket assemblies	3	
14	面板网罩	Plastic panel net	1	
15	面板	Panel	1	
16	左侧支撑板	Left propping board	1	
17	六角螺母	Hex nut	1	
18	弹簧垫圈	Single coil spring lock washer slight type	1	
19	轴流风叶	Axial-flow wind leaves	1	
20	风叶电机	Outdoor electric motor	1	
21	电机架	Holder for electric motor	1	
22	隔风立板	Wind-fending standing board	1	
23	顶盖板	Top cover	1	
24-27	冷凝器组件	Condenser assembly	1	
28	四通阀	Four-way valve	1	
29	电容抱攀	Capacitance embrace climb	1	
30	压缩机电容	Capacitor for compressor	1	
31	风机电容	Capacitor for motor	1	
32	电器架	Holder for wiring unit	1	
33	端子板	Terminal board	1	
34	电源连接线压板	Power source jumper linking piece	1	
35	电源连接线压板底板	Power source jumper linking piece floor	1	

8.4 Indoor unit for 18K

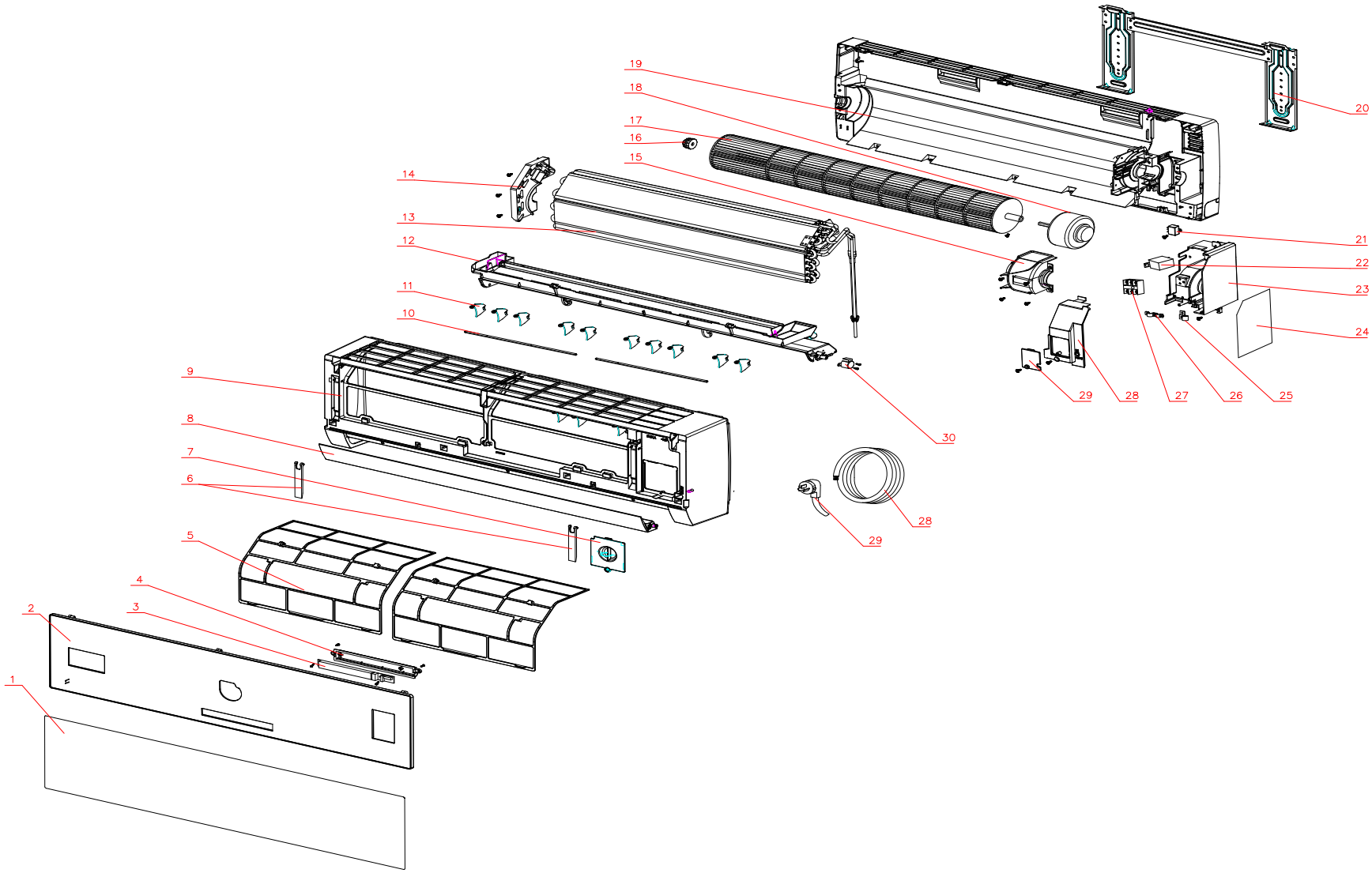

Parts List of Indoor unit for 18K

No	名称	Name	Quantity	Remark
1	面板 A	Panel A	1	
2	面板 B	Panel B	1	
3	显示灯板组件	Display board	1	
4	显示灯座	Indication lamp holder	1	
5	过滤网组件	Filter	2	
6	面板支撑杆	Panel carriage	2	
7	中框盖	Cover of medium frame	1	
8	导风门	Horizontal air-blade	1	
9	中框	Medium frame	1	
10	导风叶片连杆	Connecting rod for air-blade	2	
11	导风叶片	Vertical air-blade	10	
12	导风架	Air-vent holder	1	
13	蒸发器总成	Evaporator assembly	1	
14	蒸发器左支架	Left plastic-crutch for evaporator	1	
15	电机压盖	Motor cover	1	
16	橡胶轴承座	Bearing holder for indoor fan	1	
17	贯流风叶	Cross flow fan	1	
18	电机	Fan motor	1	
19	底座	Chassis	1	
20	挂板组件	Mounting plate	1	
21	负离子发生器	Negative ion	1	
22	变压器	Transformer	1	
23	电控盒	Controller box	1	
24	主控板	Main PCB	1	
25	电源线抱攀	Power supply clamp	1	
26	电源连接线压板	Connection cable clamp	1	
27	端子板	Terminal board	1	
28	电控盒盖	Cover of controller box	1	
29	电控盒接线盖	Top cover of connection line	1	
30	步进电机	Step motor	1	
31	电源连接线	Connection cable	1	
32	电源线	Power supply	1	

8.5 Outdoor unit for 18K

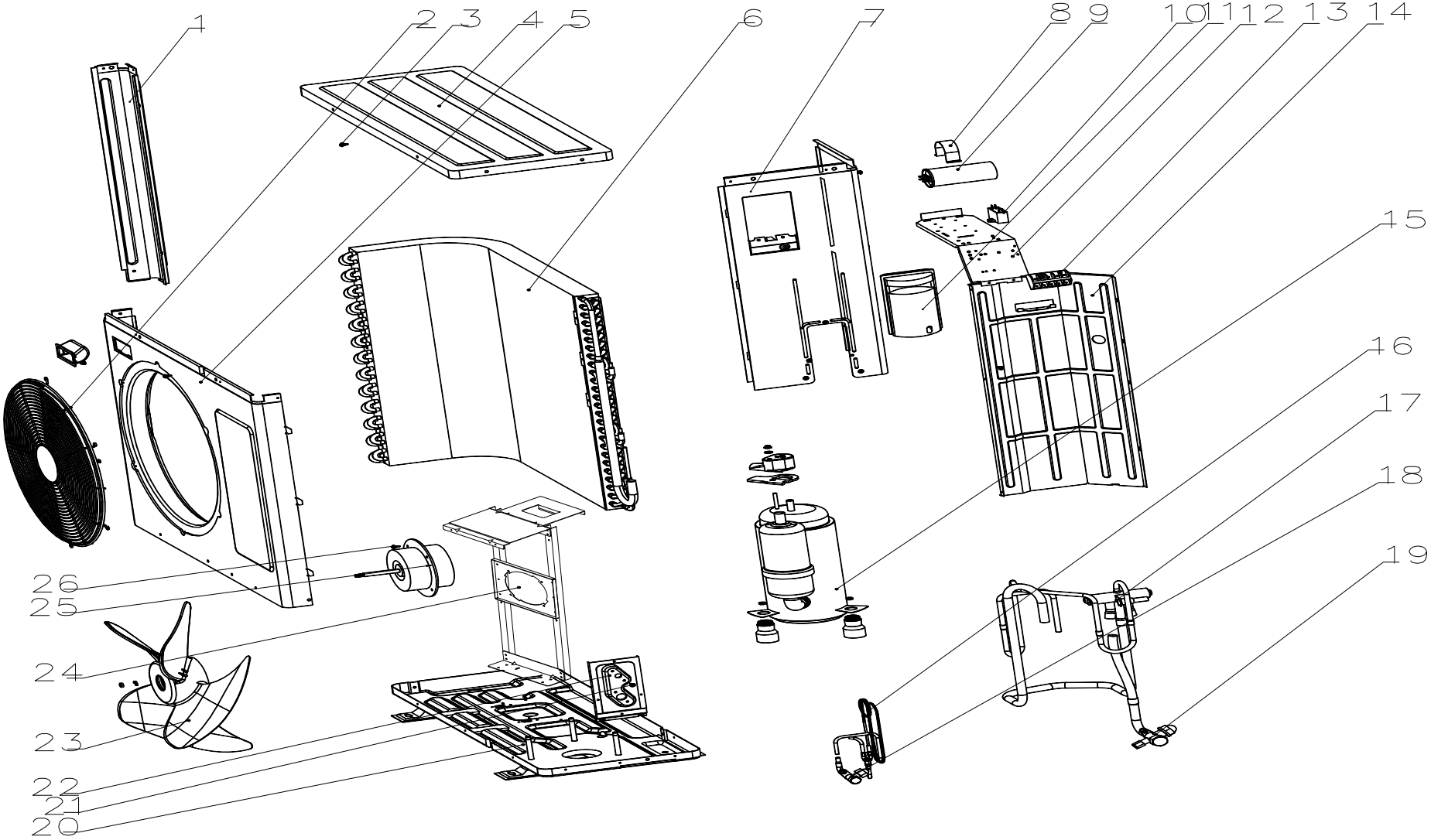

Parts List of Outdoor unit for 18K

Exploded View No	Chinese Name	Name	Pcs	Part No.
1	左侧支撑板	Left side plate	1	
2	面板网罩	Panel net	1	
3	大扁头自攻螺钉	Screw	9	
4	顶盖板	Top cover	1	
5	面板	Panel	1	
6	冷凝器组件	Condenser	1	
7	右侧板	Right side plate	1	
8	电容抱攀	Capacitor clamp	1	
9	压缩机电容	Compressor capacitor	1	
10	风机电容	Fan capacitor	1	
11	电器盖板	handle	1	
12	电器架	Holder for wiring unit	1	
13	端子板	Terminal board	1	
14	隔风立板	Partition plate	1	
15	压缩机组件	Compressor assembly	1	
16	毛细管管路组件	Capillary assembly	1	
17	四通阀管路组件	4-way valve assembly	1	
18	液阀	Liquid valve	1	
19	气阀	Gas valve	1	
20	底盘	Chassis	1	
21	泵脚螺栓	bolt	3	
22	阀板	Valve plate	1	
23	轴流风叶	Axial-flow fan	1	
24	电机架	Motor bracket	1	
25	风叶电机	Fan motor	1	
26	螺钉	Screw	4	

8.6 Indoor unit for 24K

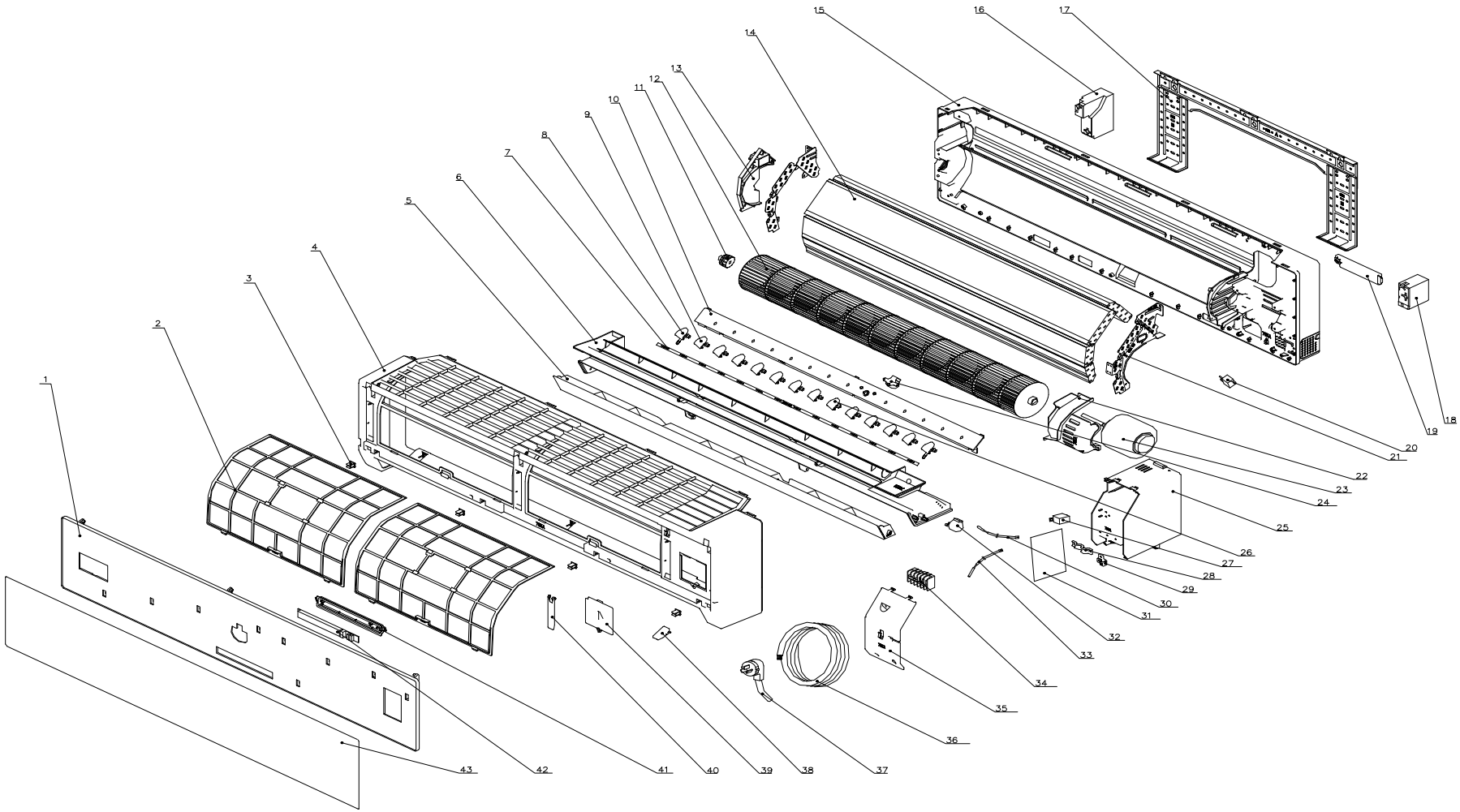

Parts List of Indoor unit for 24K

No	名称	Name	Quantity	Remark
1	面板	Panel	1	
2	过滤网组件	Filter	2	
3	面板卡扣	Panel clasper	3	
4	中框	Medium frame	1	
5	导风门	Horizontal airflow blade	1	
6	导风架	Air-vent holder	2	
7	导风叶片连杆	Connecting rod for airflow vanes	1	
8	导风叶片 A	Vertical airflow vanes A	7	
9	导风叶片 B	Vertical airflow vanes B	7	
10	导风叶片托板	Bracket of airflow vanes	1	
11	轴承支撑座	Bearing for indoor fan	1	
12	贯流风叶	Cross-flow fan	1	
13	蒸发器左支架	Left-hand propping holder for evaporator	1	
14	蒸发器总成	Evaporator assembly	1	
15	底座	chassis	1	
16	底座左支撑泡沫	Foam of left chassis	1	
17	挂板组件	Mounting plate	1	
18	底座右支撑泡沫	Foam of right chassis	1	
19	管路压板	Pipe clamp	1	
20	负离子发生器	Negative ion	1	optional
21	蒸发器右支撑板	Right-hand propping holder for evaporator	1	
22	电机压盖	Motor cover	1	
23	室内电机	Indoor fan motor	1	
24	导风叶片步进电机	Step motor of airflow vanes	1	
25	电控盒	Controller box	1	
26	导风叶片	Vertical airflow vanes	1	
27	变压器	Transformer	1	
28	电源线抱攀 A	Clamp of cable A	1	
29	电源线抱攀 B	Clamp of cable B	1	
30	内环探头	Room temperature sensor	1	
31	PCB 板	Main PCB	1	
32	导风门步进电机	Step motor of airflow blade	1	
33	盘管探头	pipe temperature sensor	1	
34	端子板	Terminal board	1	
35	电控盒盖	Cover of controller box	1	
36	电源线	Connection cable	1	
37	电源插头	Power supply plug	1	
38	螺钉盖	Screw cover	1	
39	中框接线盖	Cover of medium frame	1	
40	支撑杆	Stand bar	1	
41	显示灯座	Holder of display board	1	
42	显示屏	Display screen	1	
43	面板	Panel	1	

8.7 Outdoor unit for 24K

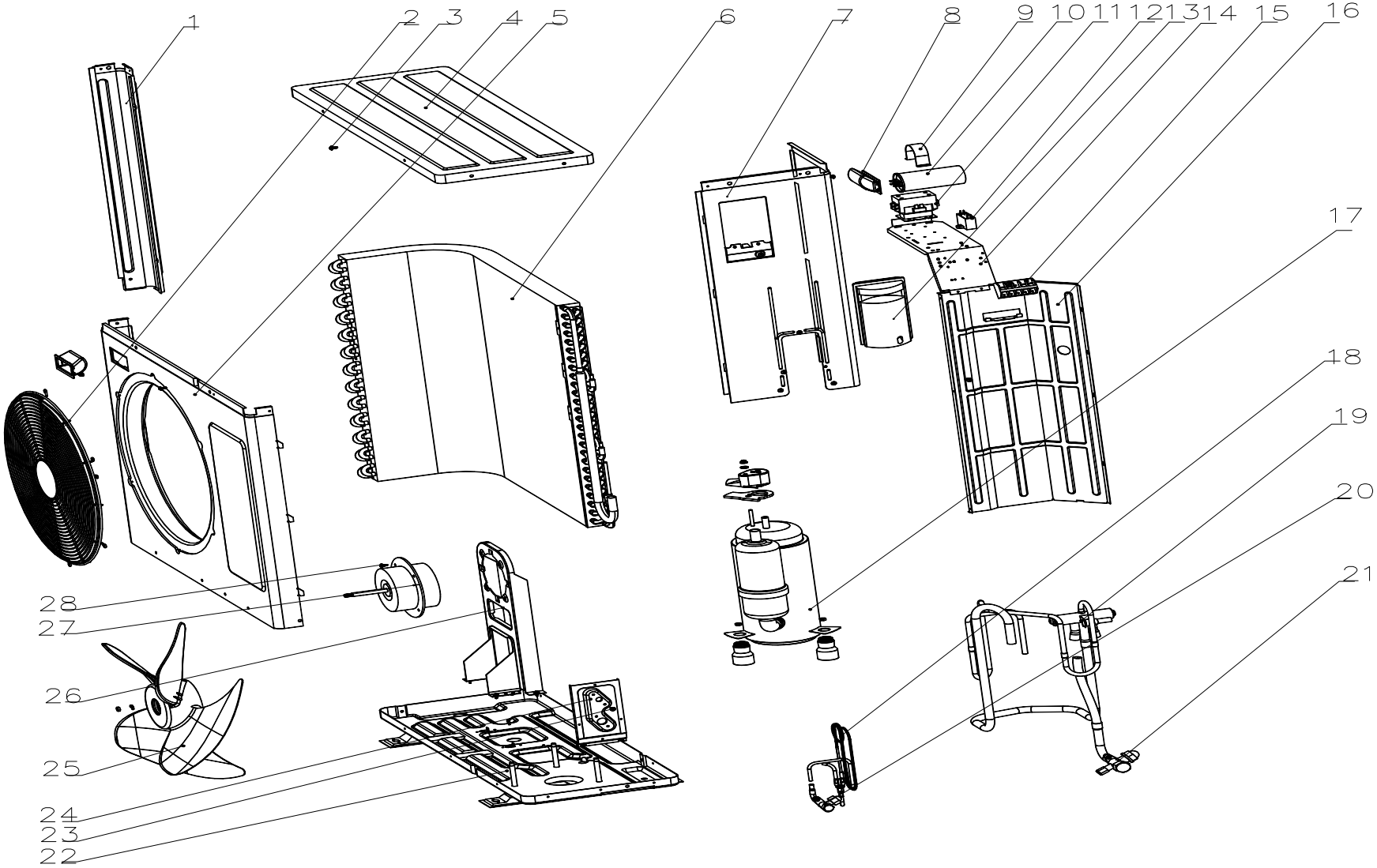

Parts List of Outdoor unit for 24K

Exploded View No	Chinese Name	Name	Pcs	Part No.
1	左侧支撑板	Left side plate	1	
2	面板网罩	Panel net	1	
3	大扁头自攻螺钉	Screw	9	
4	顶盖板	Top cover	1	
5	面板	Panel	1	
6	冷凝器组件	Condenser	1	
7	右侧板	Right side plate	1	
8	小挖手	handle	2	
9	电容抱攀	Capacitor clamp	1	
10	压缩机电容	Compressor capacitor	1	
11	交流接触器	AC contactor	1	
12	风机电容	Fan capacitor	1	
13	电器盖板	handle	1	
14	电器架	Holder for wiring unit	1	
15	端子板	Terminal board	1	
16	隔风立板	Partition plate	1	
17	压缩机组件	Compressor assembly	1	
18	毛细管管路组件	Capillary assembly	1	
19	四通阀管路组件	4-way valve assembly	1	
20	液阀	Liquid valve	1	
21	气阀	Gas valve	1	
22	底盘	Chassis	1	
23	泵脚螺栓	bolt	3	
24	阀板	Valve plate	1	
25	轴流风叶	Axial-flow fan	1	
26	电机架	Motor bracket	1	
27	风叶电机	Fan motor	1	
28	螺钉	Screw	4	

AUX 宁波奥克斯空调有限公司
ADD:No556,east Yinzhou Greatroad,Ningbo,P.R.China
Tel:+86(574)8822 0156 Fax:+86(574)8822 0683
Code:315100
Http://www.cnaux.com