AUX
奥克斯空调

SPLIT TYPE ROOM AIR CONDITIONER

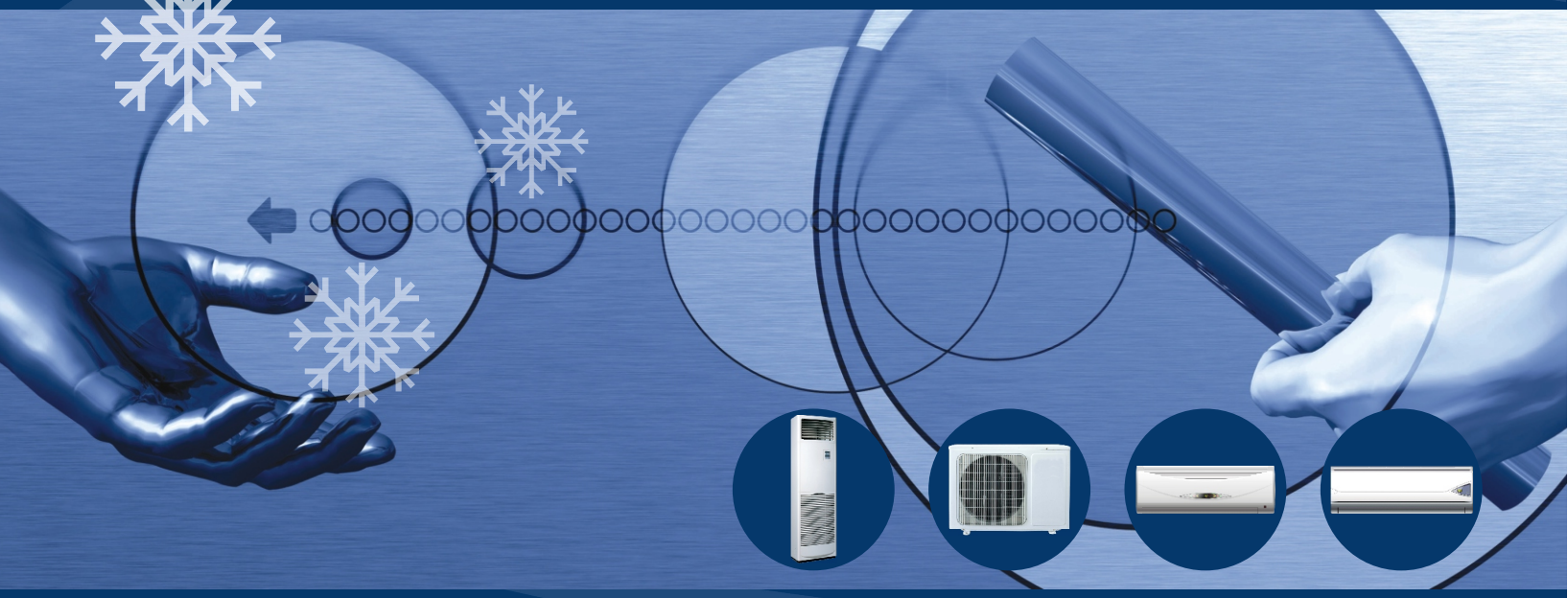

For model:
ASW-H09A4/EAR1-dw
ASW-H12B4/EAR1-dw
ASW-H18B4/EAR1-dw
ASW-H24B4/EAR1-dw

Service Manual

2007 [版]
技术服务手册

CONTENTS

Product Specifications.....1

Dimensions.....2

Refrigeration Cycle Diagram.....3

Remote Controller Instructions.....4

Brief Introduction Of Installation.....13

Wiring Diagram.....17

Operation Details.....20

Troubleshooting Guide.....41

Disassembly Of The Parts.....54

Electronic Control Device.....64

Exploded Pictures.....66

Product Specifications

Item				Model	ASW-H09A4/EAR1		ASW-H12B4/EAR1		ASW-H18B4/EAR1		ASW-H24B4/EAR1	
					Indoor	Outdoor	Indoor	Outdoor	Indoor	Outdoor	Indoor	Outdoor
Performance	Cooling capacity			KW	2.5		3.5		5.3		7.0	
	Heating capacity			KW	2.75		3.85		5.3		7.3	
	Dehumidifying			Kg/h	1.0		1.2		1.9		2.8	
	Air circulation	Cooling		m^3/h	430	1500	550	2000	850	2500	1000	2700
		Heating		m^3/h	430	1500	550	2000	850	2500	1000	2700
	Noise lever	Cooling		dB	38	52	41	54	48	57	48	58
		Heating		dB	38	52	41	54	48	57	48	58
	Power-supply	ϕ--V--Hz			1/220-240V/50Hz		1/220-240V/50Hz		1/220-240V/50Hz		1/220-240V/50Hz	
Input	Rated power consumption	Cooling		W	850		1240		1860		2650	
		Heating		W	900		1270		2000		2600	
	Rated current	Cooling		A	4		5.5		8.2		12	
		Heating		A	4.3		5.7		8.6		11.8	
	Input factor	Cooling		%	98%		98%		98%		98%	
		Heating		%	98%		98%		98%		98%	
	Starting current			A	/		/		/		/	
	Power supply cord	Length		m	/	/	/	/	/	/	/	/
		Type			250V 10A		250V 10A		250V 16A		250V 16A	
	Fuse capacity			A	3.15	/	3.15	/	3.15	/	3.15	/
Dimension	Dimension	D×W×H		mm	210*745*250	320*818*540	210*745*250	320*818*540	1095*312*205	800*300*690	1095*312*205	800*300*690
	Net weight			Kg	9.5	34	9.5	36	15	50	15	55
	Connection pipe	Liquid(mm)		OD×L	ϕ6.35×3600		ϕ6.35×3600		ϕ6.35×3600		ϕ9.52×3600	
		Gas(mm)		OD×L	ϕ9.52×3600		ϕ9.52×3600		ϕ12.7×3600		ϕ15.88×3600	
	Drain pipe (mm)			ID×L	ϕ14×780		ϕ14×780		ϕ14×780		ϕ14×780	
	Compressor	Type			/	Rotary	/	Rotary	/	Rotary	/	Rotary
		Motor	Type		/	/	/	/	/	/	/	/
			Rated input	W	/	910	/	1220	/	1785	/	2500
	Fan-motor	Type			Through-flow	Axial-flow fan	Through-flow	Axial-flow fan	Through-flow	Axial-flow fan	Through-flow	Axial-flow fan
		Motor	Type		Plastic-sealed	Iron shell	Plastic-sealed	Iron shell	Plastic-sealed	Iron shell	Plastic-sealed	Iron shell
			Rated input	W	13	25	19	30	68	25	30	68
Heat exchanger (Row×line)					2×11	1×24	2×13	2×24	2×13	1×32	2×16	2×30
Refrigerant control					Capillary		Capillary		Capillary		Capillary	
Refrigerant/Charge (g)					R410A/860		R410A /980		R410A /1580		R410A /1880	
Protection equipment					/	EXTERNAL	/	EXTERNAL	/	EXTERNAL	/	EXTERNAL

Dimensions

(1) Indoor unit

MODEL / DIM		7K BTU Series	9K,12K BTU Series	18K,24K BTU Series
W	mm	680	745	1095
H	mm	250	250	312
D	mm	180	210	205

(2) Outdoor unit

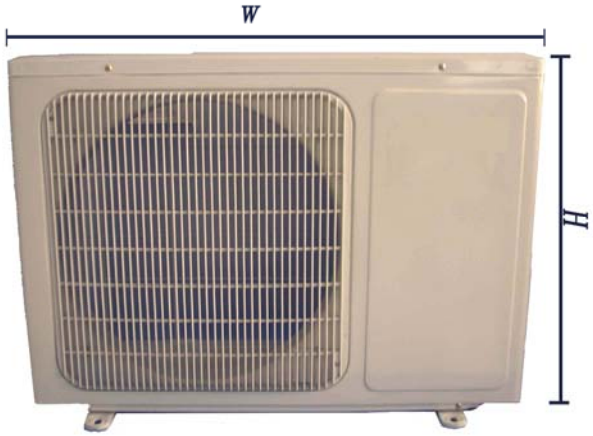

MODEL / DIM		7K BTU Series	9K,12K BTU Series	18K BTU Series	18K,24K BTU Series
W	mm	600	760	800	800
H	mm	490	540	590	690
D	mm	250	260	300	300

Refrigeration Cycle Diagram

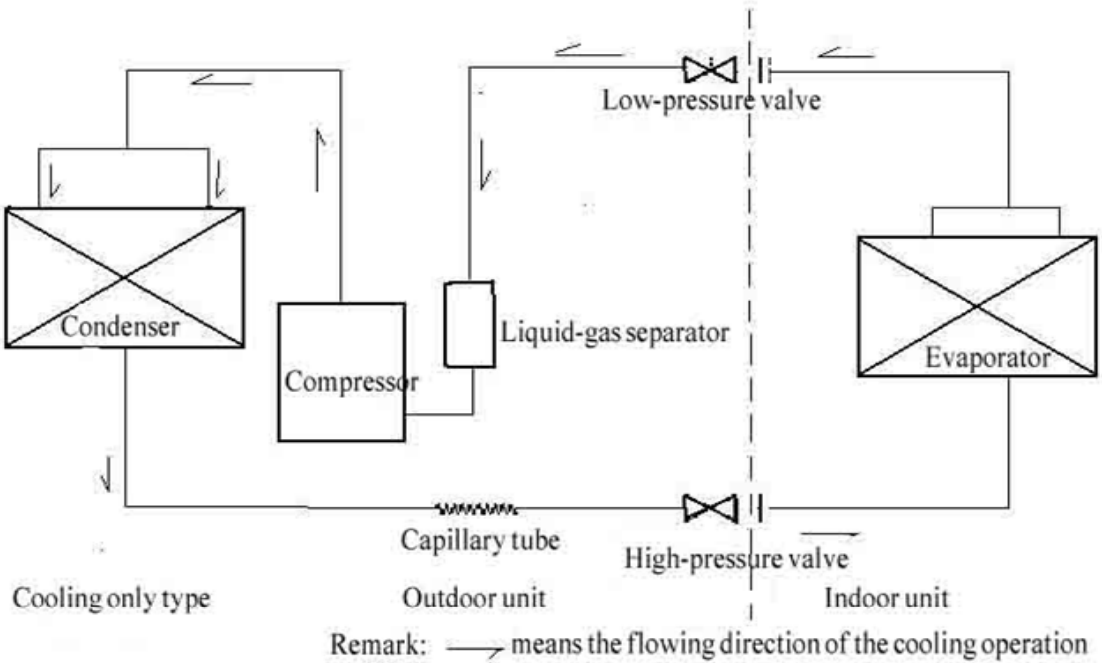

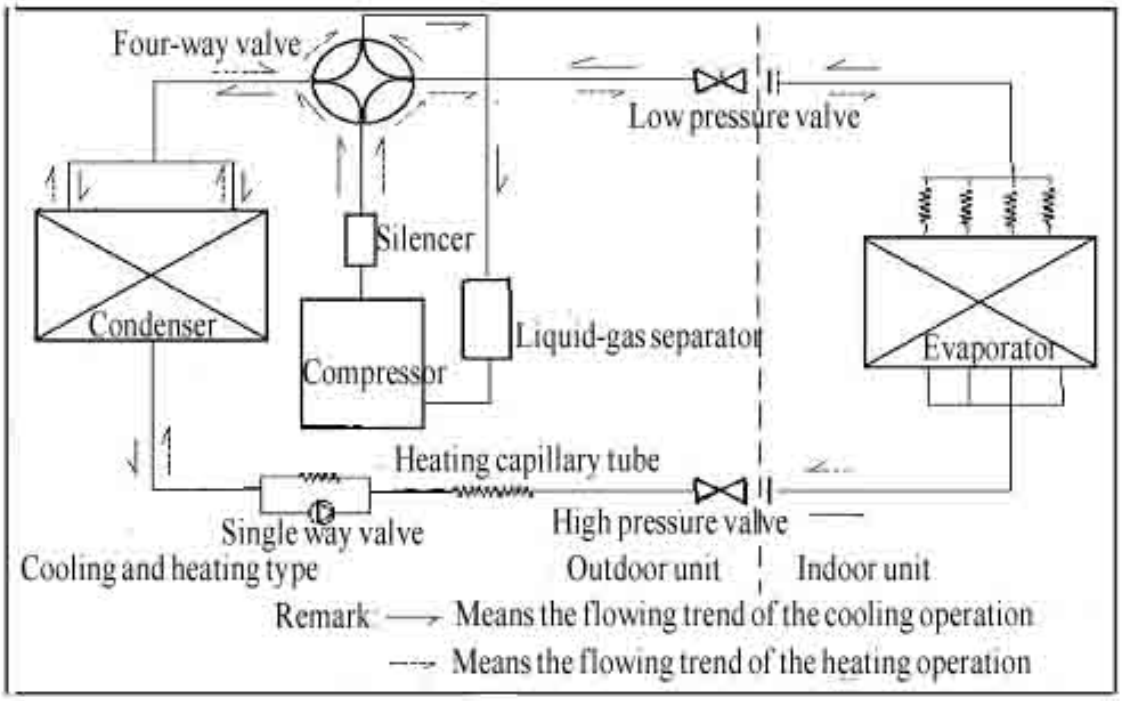

MODEL	Pipe size (Diameter: Ø)		Max. Piping Length (m)	Max. Elevation (m)
	Liquid(inch)	Gas(inch)		
9K,12K BTU Series	1/4	3/8	15	3-4
18K BTU Series	1/4	1/2	20	5
24K BTU Series	3/8	5/8	25	5.5

AIR-CONDITIONER REMOTE CONTROLLER

INSTRUCTIONS

- Read this "instructions" carefully so that you can use the air-conditioner safely and correctly.
- Take good care of the "instructions" so that it can be referred to at any time.

Names and functions of the buttons

The closing state of remote controller:

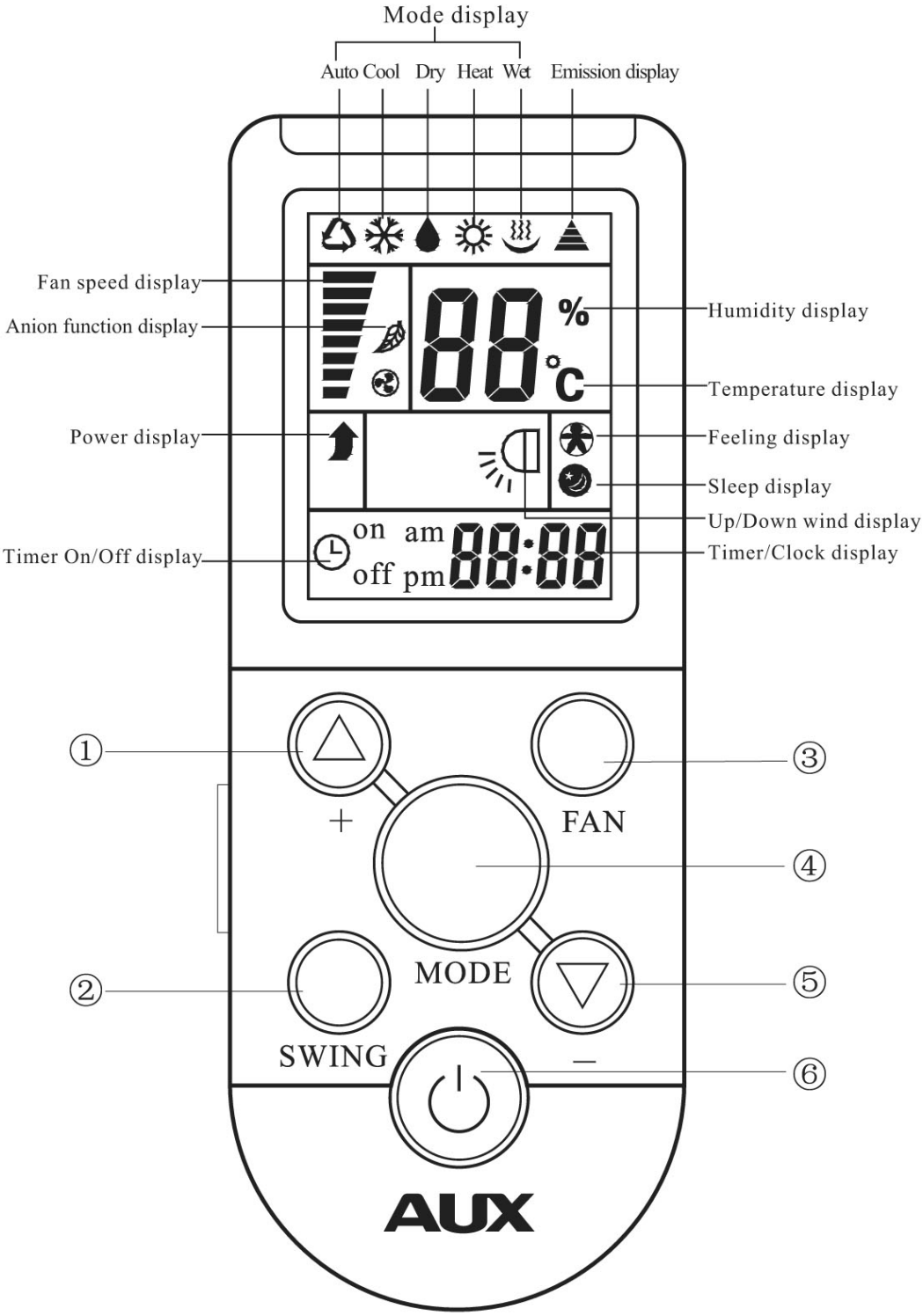

① " + " **button**

This button can set room temperature.
Press it once, the temperature increases 1℃. Press it continuously, the temperature increases at the speed of 4℃/s.
This function is invalid when the appliance at the Fan and Auto mode.

② **"SWING" button**

Press the button, the LCD shows the " " symbol, the horizontal airflow direction plate can adjust automatically. When you have the desired wind direction, please press it again, the airflow direction plate will stop at the situation.

③ **"FAN" button**

You can select fan speed show as the follow:

The type of E series:

→ Low → Med → High → Auto

The type of H、M series:

→ Quiet → Low → High → Power

④ **"MODE" button**

Which enables you to select different operation mode, after each pressing, the operation mode will be changed. It shows in the following display.

→ **AUTO** → **COOL** → **DRY** → FAN → **HEAT**

Remark: Cold wind type has no heating function.

⑤ " - " **button**

This button can set room temperature.
Press it once, the temperature decreases 1℃. Press it continuously, the temperature decreases at the speed of 4℃/s.
This function is invalid when the appliance at the Fan and Auto mode.

⑥ " " **Button**

You can start the air-conditioner by pressing this button and stop its operation by pressing it again.

The opening state of remote controller:

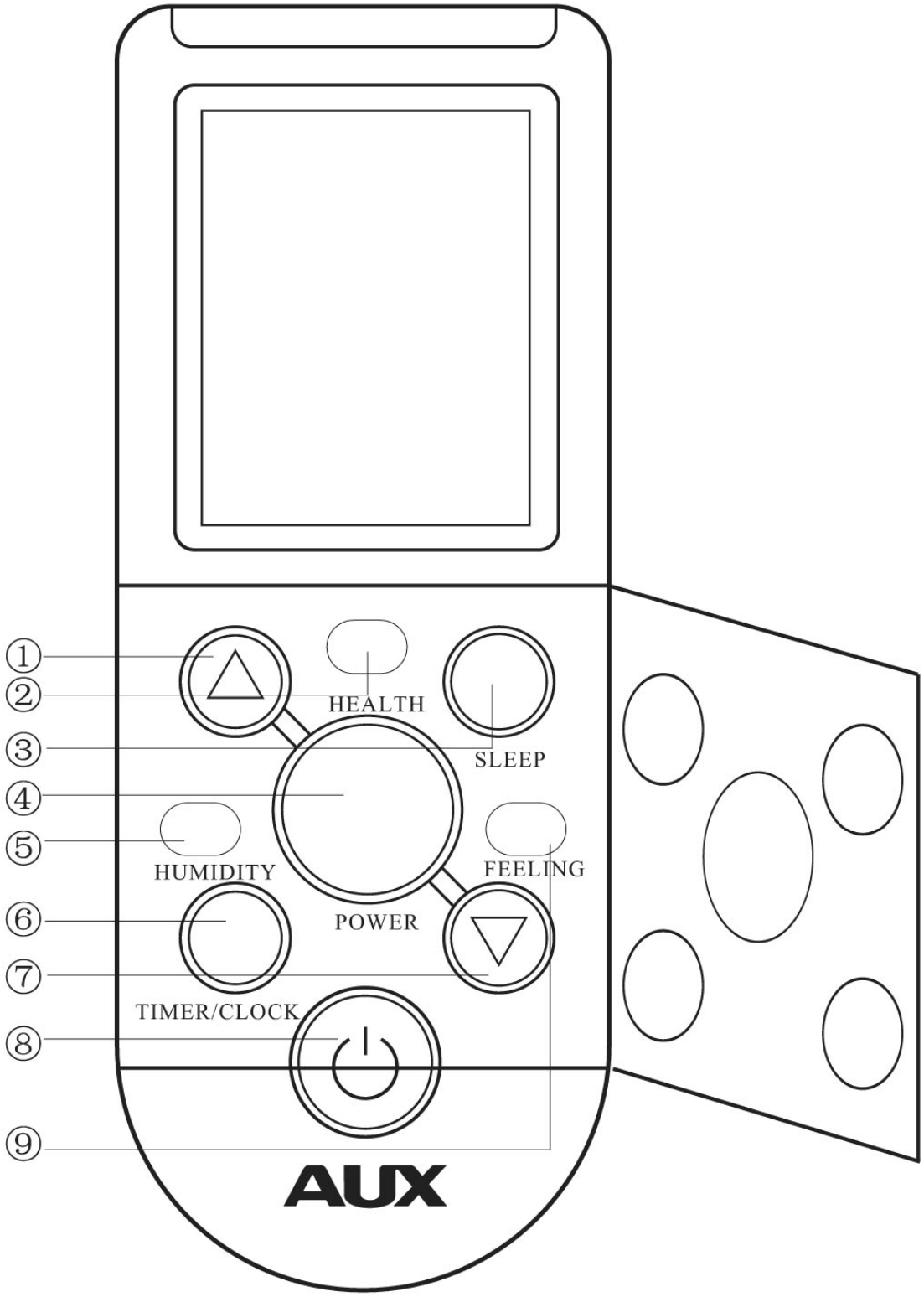

① " △ " button

This button not only can adjust clock time and the timer time but also can set room humidity.

Adjusting clock time and timer time

Press it once, the time increases one minute. Press it for 1 to 3 seconds, time display will increase at the speed of 2min/s.
For 3 to 5 seconds, it will increase at the speed of 10min/s.
For more than 5 seconds, it will increase at the speed of 10min/s.

Setting room temperature and room humidity

Press it once, the humidity increases 5%.

② "HEALTH" button

Press this button, the LCD shows the " " symbol, the anion emission function of the air conditioner is started.
Press the button once again, The " " symbol disappears, the function is cancelled at the same time.

③ "SLEEP" button

Press this button, the LCD shows the " " symbol, the sleeping function of the air conditioner is started. After 7 hours of setting this function, the air conditioner will be off automatically.
Press the button once again, The " " symbol disappears, the function is cancelled at the same time.
This function is invalid when the appliance under the Fan mode.

④ "POWER" button

☆ When it displays **"POWER" button:**

Press this button, the fan speed reach the highest, press it again it resume the foregoing fan speed.

Note: 1. This function is valid only on HEAT or COOL mode.
2. This function is invalid on H、M series product.

Screen display setting

1. Press the "POWER" for 3 seconds, it will display the state of the air conditioner through LED、LCD、or VFD.
2. Press it for 3 seconds again, it will cancel the screen display.

⑤ "HUMIDITY" button

Only under the mode of Heat and Fan, Press this button once, the LCD shows the " " symbol, the wetting function of the air conditioner is started. The initial humidity is 60%. Press the " △ " or " ▽ " button once, the humidity increases or decreases 5%. The setting range is 30%~60%.
Press the button once again, The " " symbol disappears, the function is cancelled at the same time.

⑥ "TIMER/CLOCK" button

Setting the "ON/OFF" timer time

When remote controller is at the on/off state, Press this button, the LCD flickers the "off/on" symbol. Press the "△" or "▽" button to set the timer time. After finishing it, press this button again in 10 seconds to affirm. If the setting time is the same as the current time, this setting is invalid.

Press the button once more, The "off/on" symbol disappears, the function is cancelled at the same time. " " " "

Adjusting the clock time

Press this button in 5 seconds Under the state of no timer setting, the LCD flickers the "am pm 88:88" symbol. Press the "△" or "▽" button to set the timer time. After finishing it, press this button again in 10 seconds to affirm. If not, this operation is invalid.

⑦ "▽" button

This button not only can adjust clock time and the timer time but also can set room humidity.

Adjusting clock time and timer time

Press it once, the time decreases one minute. Press it for 1 to 3 seconds, time display will decrease at the speed of 2min/s.
For 3 to 5 seconds, it will decrease at the speed of 10min/s.
For more than 5 seconds, it will decrease at the speed of 10min/s.

Setting room temperature and room humidity

Press it once, the humidity decreases 5%.

⑧ "⏻" button

You can start the air-conditioner by pressing this button and stop its operation by pressing it again.

⑨ "FEELING" button

☆ When it displays "FEELING" button:

Press this button can be used to set the feeling function.
The LCD shows the actual room temperature when the function set and it shows the setting temperature when the function cancelled.
This function is invalid when the appliance at the Fan mode.

Application method

★ Fix batteries

1.Slide open the cover according the direction indicated by arrowhead.

2.Put into two brand new batteries (7#),position the batteries to right electric poles (+&-).

3.Put back the cover.

Remark:Make sure to connect the wire to independent power source socket before you use the remote controller.

★ Cooling /Heating operation mode

(Cold wind type has no heating function)

1.Press the "⏻" button,the operation indicator is on,the air conditioner starts to operate the Cooling or Heating mode. Press the button again,the air-conditioner stops.

2.Press the **MODE** button,select the Cooling or Heating operation mode.

3.Press the "+" or " -" button, you can set the temperature range from 16℃ to 32℃.

4.Press the **FAN** button, you can select fan speed from " Low" , "Med" , "High" , "Auto" .

★ Drying operation mode

1.Press the **MODE** button,select the dry mode operation.

2.Press the "+" or " -" button, you can set the temperature range from 16℃ to 32℃.

3.Press the **FAN** button, you can select fan speed.

The type of H、M series:

You can select fan speed from "Power" , "High" "Low" "Mute" .

The type of E series:

You can select fan speed from " Auto " , "High" , "Mid" " Low " .

★Circulation operation mode

1.Press the **MODE** button,select the fan operation mode.

2.Press the **FAN** button, you can select fan speed.

The type of H、M series:

You can select fan speed from "High", "Low", "Mute".

The type of E series:

You can select fan speed from "High", "Mid", "Low".

Remark: In the fan operation mode,to set the temperature is noneffective.

★ Automatic operation mode

1.Press the **MODE** button,select the automatic operation mode.

2.Press the **FAN** button, you can select fan speed.

The type of H、M series:

You can select fan speed from "Power", "High" "Low" "Mute".

The type of E series:

You can select fan speed from "Auto", "High", "Mid" "Low".

Remark: In the fan operation mode,to set the temperature is noneffective.

★ Clock time setting

1.Press the **TIMER/CLOCK** button for 5 seconds, the time indicator at present begins to glimmer.

2.Adjust present time through pressing the "+" or "—" button.

3.Press the **TIMER/CLOCK** button once again, the time setting is finished.

Remark :Time can be regulated only after the timing mode is cancelled .

★ Timer setting

☆ Set the "**Timer ON**" (It is effective only when the air conditioner is shut off).

1.Press the **TIMER/CLOCK** button ,the remote controller display "on" immediately.

2.Adjust time through pressing the "+" or "—" button.

3.Press the **TIMER/CLOCK** button again, the "**Timer ON**" setting is finished.

☆ Set the "Timer OFF". (It is effective only when the air-conditioner is running.)

1. Press the **TIMER/CLOCK** button ,the remote controller display "$\ominus_{off}$" immediately.
2. Adjust time through pressing the " + " or " — " button.
3. Press the **TIMER/CLOCK** button again, the "**Timer OFF**" setting is finished.

★ Sleeping operation mode

1. Press the SLEEP button,the sleeping indicator light of indoor unit flashes on.
2. After the setting of sleeping mode,the cooling operation enables the set temperature to increase 1℃ after 1 hour and another 1℃ automatically after 1 hour.
3. After the setting of sleeping mode,the heating operation enables the set temper ature to drop 2℃ after 1 hour and another 2℃ automatically after 1 hour.
4. The air-conditioner runs in sleeping mode for 7 hours and stops automatically.

Remark: Press the **MODE** button or **ON/OFF** button,the remote controller clears sleeping mode away.

Attention

★ Aim the remote controller towards the receiver on the air-conditioner .

★ The remote controller should be within 8 meters away from the receiver.

★ No obstacles between the remote controller and receiver.

★ Don't drop or throw the remote controller.

★ Don't put the remote controller under the forceful sunrays or heating facilities and other heating sources.

★ Use two 7# batteries,don't use the electric batteries.

★ Take the batteries out of remote controller before stop its using for long.

★ When the noise of transmitting signal can't be heard indoor unit or the transmission symbol on the display screen doesn't flare,batteries need be replaced.

★ If reset phenomenon occurs on pressing the button of the remote controller,the electric quantity is deficient and new batteries need to be substituted.

Brief Introduction Of Installation

The installation of air-conditioner should meet with the “Installation Instruction”. The machine must be installed correctly by professional technicians according to the “Installation Instruction”.

(1) Guide to customer

①The customer should provide a suitable power supply source, its voltage should be in the range of 90-110% of its rated voltage.
②The power supply circuit should have MCB leakage protection. The capacity should be more than 1.5 times of the maximum current.
③Must use independent circuit and suitable grounding socket matching with the plug of air-conditioner.
④The wiring must be installed by qualified electrician according to the electrical safety requirements.
⑤The air-conditioner must be well grounded, the switch of the main power of air-conditioner must be reliably grounded.
⑥The power supply wire, must be changed by qualified electrician.

(2) Installation Instruction

1. Installation order

Selection of the installation position → Installing the air-conditioner → Connecting the pipes and wires → Expelling the air in the pipes and the indoor unit → Testing

2. Selection of the installation position

Indoor Unit:

①There is no heating and steaming source nearby.
②No obstacles for installation position from nearby.
③Keep good air circulation.
④Convenient to adopt measures to reduce noises.
⑤Don’t install them near the doorway.
⑥ Make sure to have the distance specified in the picture between the ceiling, wall, furniture and other obstacles.
⑦2 meters high above the floor.

Outdoor Unit:

① In case that you put up a canopy to protect it from rains and sunrays, pay attention not to cause any obstacles for the heating dispersion for the condenser.
② Don’t keep animals or plants near the installation location for the hot air from the outdoor unit will affect them.
③ Make sure to have the distance specified in the picture between ceiling, wall, furniture and other obstacles.
④ Stay away from heating source and inflammable air.
⑤The installation base and supporting frame should be strong and secure. The machine should be at a level surface.

3. Installation

Outdoor Unit:

① The outdoor unit must be firmly fixed to avoid falling in strong wind.

② Install on the cement base as in the drawing.

③ If it is installed at seaside or at a place high above the ground and with strong wind, the AC should be installed against the wall to ensure the normal operation of the fan and the blocking plate should be used.

④ If it is an overhanging installation, the structure of the mounting wall should be made of solid, cement or materials with equivalent strength, and of sufficient support capacity. Otherwise, measures such as reinforcement, support or vibration damping should be adopted.

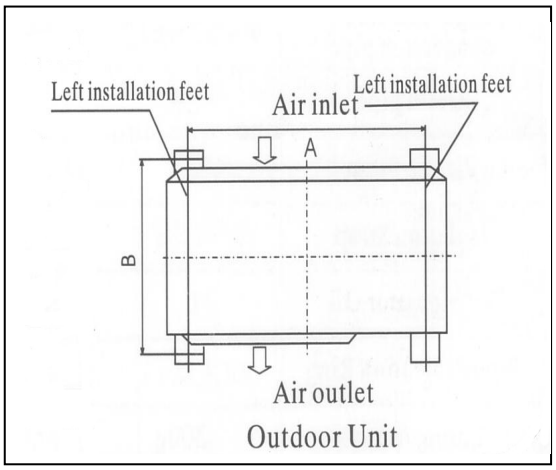

Indoor Unit

①First make changes to wall and make sure that is hard and secure. Using four "+" type screws to fasten the installation board onto the wall. Keep it level in horizontal direction and perpendicular in vertical direction. Otherwise it might cause water drips when air-conditioner is running in cooling operation.

②Drill 70mm diameter pipe hole at the left lower or right lower side of the installation board. The hole shall slant outward slightly.

③Hang the indoor unit to the oard and make sure the machine is in the middle of the board.

④Push the machine towards the left lower and right lower side of the installation board until the hangers enter tightly into the grooves (it produces "click" sound)

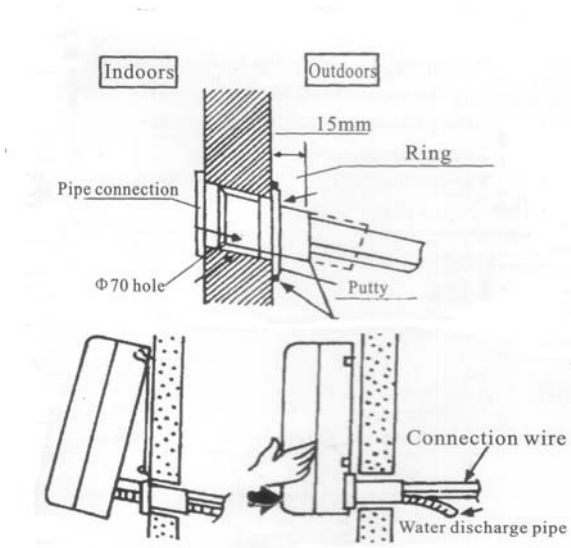

4. Check the water discharge

(1)Take off the frame from the unit cover.

Take off the front frame for maintenance according to the following steps:

①As shown in the picture on the right, take off two covers from the front frame and then unfasten two fixture screws.

②Pull the front frame towards yourself and take it off.

To put the front frame back, reverse the steps.

You should check whether the front frame is firmly fixed into the fixture groove on the top.

(2)Check the water discharge

①Pour a cup of water into groove.

②Check whether the water flow through the water discharge hole.

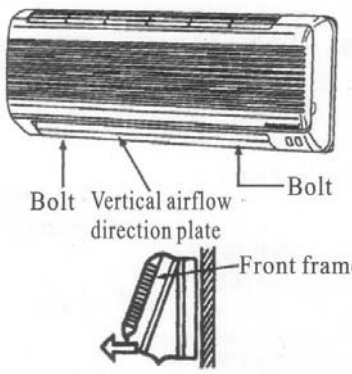

Pull down the front frame towards your and take off the front frame.

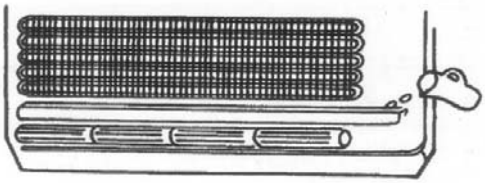

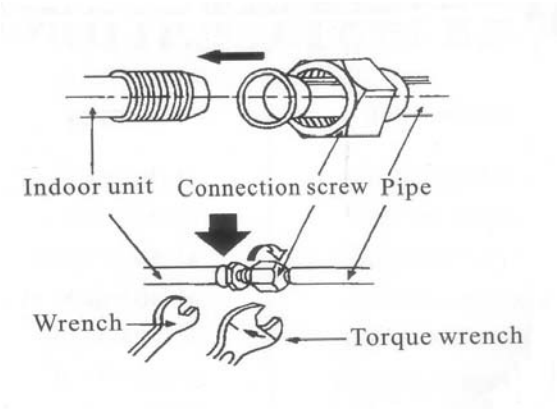

5. Pipe Connection

① Connect the pipe to the unit: point to the center of pipe and fasten the connection screw at first by hand and then by wrench until it is tightly fastened. The fastening direction is shown in the picture.

② Pointing towards the center of pipe, fasten the screw with strength.

③ Wrench the screw in the end until you hear the “click” sound.

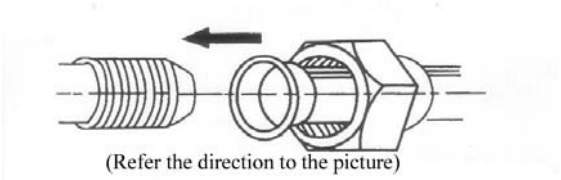

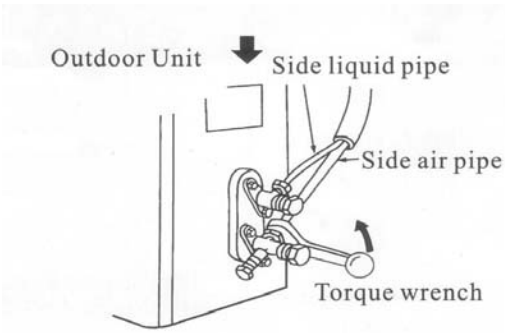

6. The fixing of pipe

① Wrap up all pipe, water discharge and connection wire from top to below.

② Cover the connection parts with insulation material and fix them with two plastic rings.

③ Wrap up the pipes with tape alongside the wall and fix them to the wall with clips. These steps are usually adopted when outdoor unit is installed below the indoor unit.

④ In case that you want to have additional water discharge pipe, the end of pipe should be within certain distance from the floor (to prevent water from draining back into the pipe). Fix it onto the wall so it won’t be swayed by wind.

⑤ Wrap the pipes and connection wire well from below to top.

⑥ Wrap up the pipes that are rounded up in the way shown in the picture so it can prevent water from entering the room.

⑦ Use clips or other fixture to fasten the pipes to the walls.

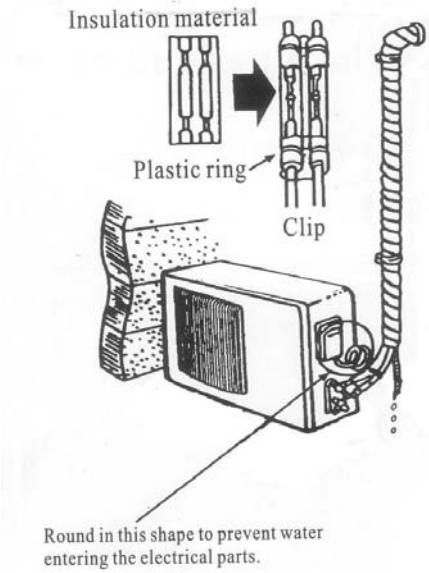

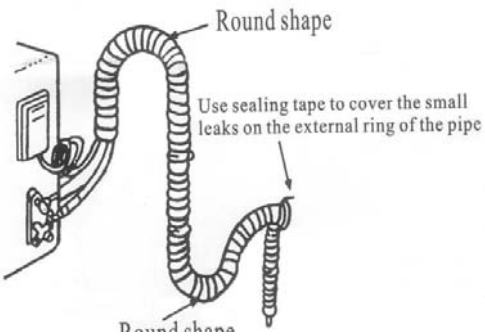

7. Expelling the air in the pipes and the indoor unit

Expelling the air: humid air in the refrigerating system might cause trouble of compressor.

①Take off the cover from the stop valve and T-branch valve.

②Take off the auxiliary cover from the T-branch valve.

③Turn the stop valve rod anti-clock wise to an angle of 90 degree, keep it open for 8 seconds and close the valve.

④Check whether there is air leakage at all connection parts of pipes.

⑤ Push the top rod of T-branch valve by hexagon wrench to expel air.

⑥Repeat the third and fifth steps.

⑦Open the stop and T-branch valve with a hexagon wrench to make the unit operate.

⑧No leakage is allowed, please check all the piping connection parts. You must test the leakage, generally, it can be tested by soap water.

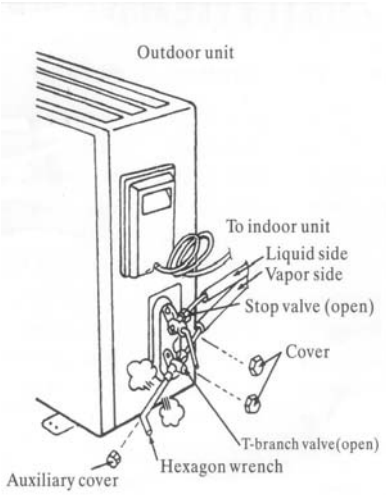

8. Electrical connection

① Unscrew the screw, take off the control panel cover from the unit.

② Cooling type: connect the wire to the related connection point on the panel and connect the signal connection plug.

Remarks: yellow and green cord should be connected to connection point with ⏚ mark.

③ Fasten the fixture of wire to control panel.

④ Screw up the control panel cover to its original place.

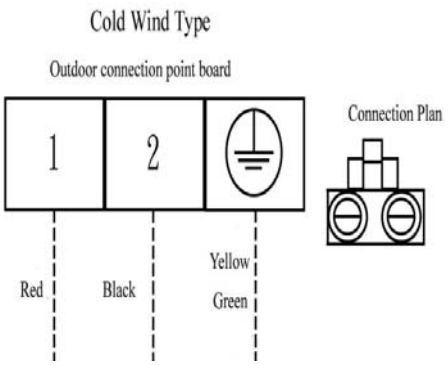

9. Test running

① Make sure that the pipes and wires are connected.

② Make sure that both the liquid valve and gas valve on the side are completely open.

The connection of power source

- Connect the wire to independent power source socket.
- Preparation of remote control.
- Run the air-conditioner in cooling operation mode for 30 minutes or longer.

Performance evaluation

- Test the out and in air temperature.
- Make sure that the temperature difference between the out and in air is greater than 8°C.

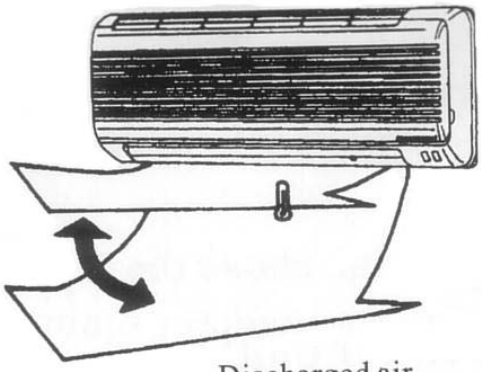

10. Items of attention

① Fix the machine firmly, otherwise it will produce noise and vibration.

② Install the outdoor unit where it will not disturb your neighbor.

Wiring Diagram

(1)7000-12000BTU

1. Indoor Unit

Cooling Only

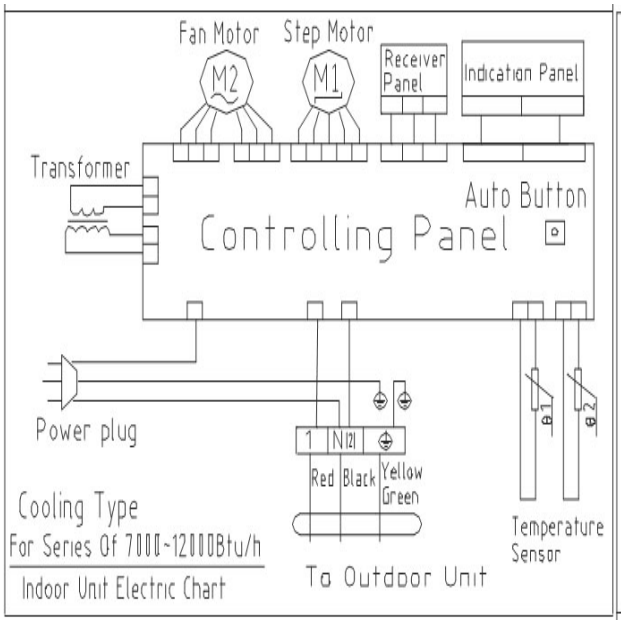

Cooling & Heating

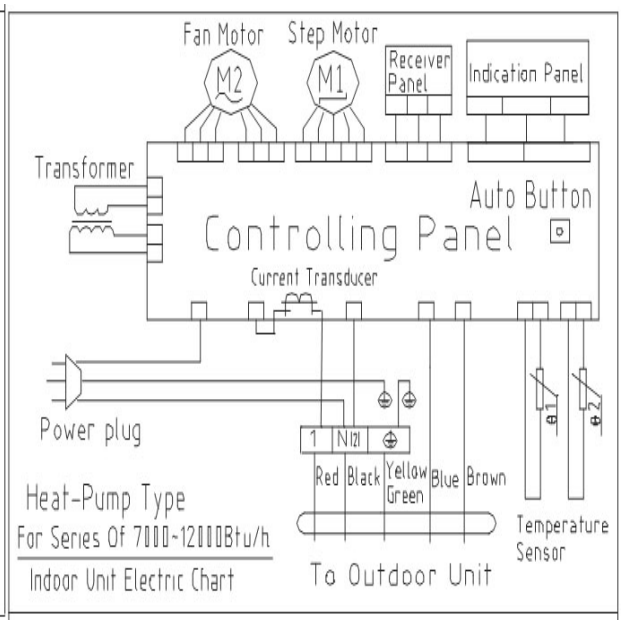

2. Outdoor Unit

Cooling Only

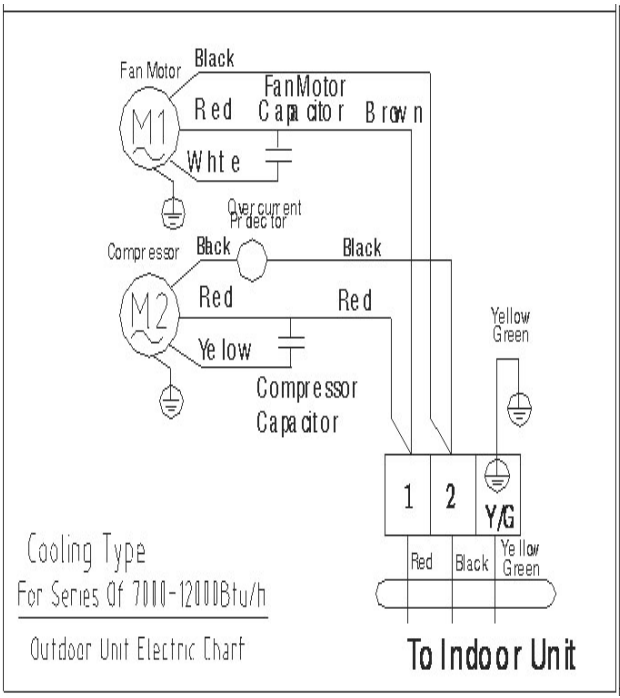

Cooling & Heating

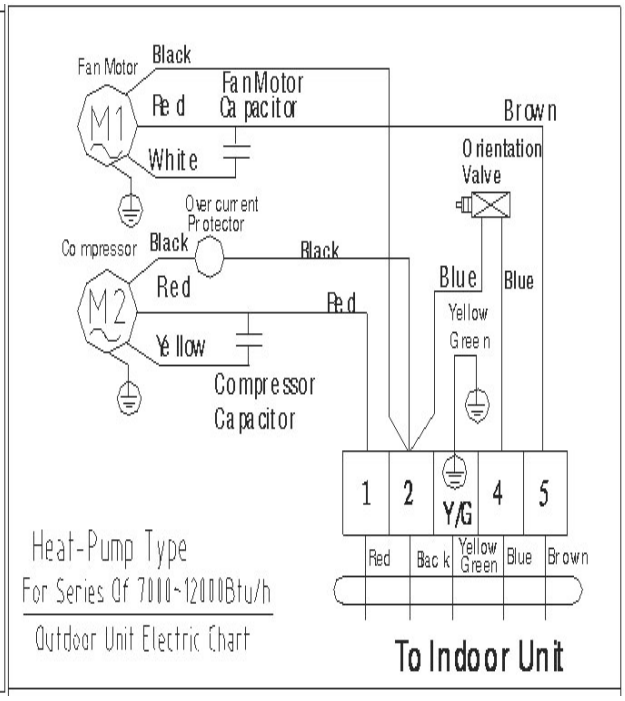

(2)18000 BTU

1. Indoor Unit

Cooling Only

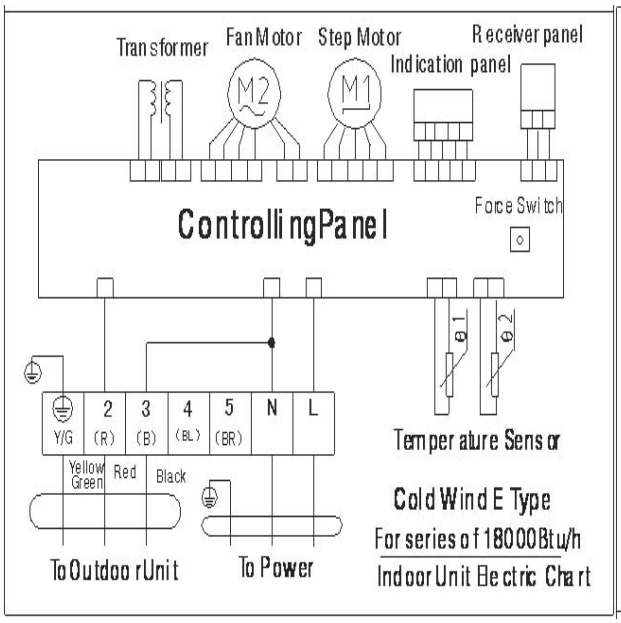

Cooling & Heating

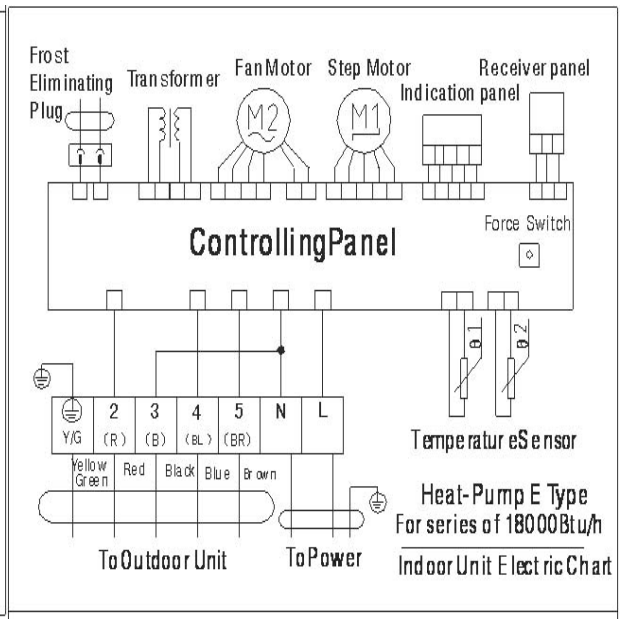

2. Outdoor Unit

Cooling Only

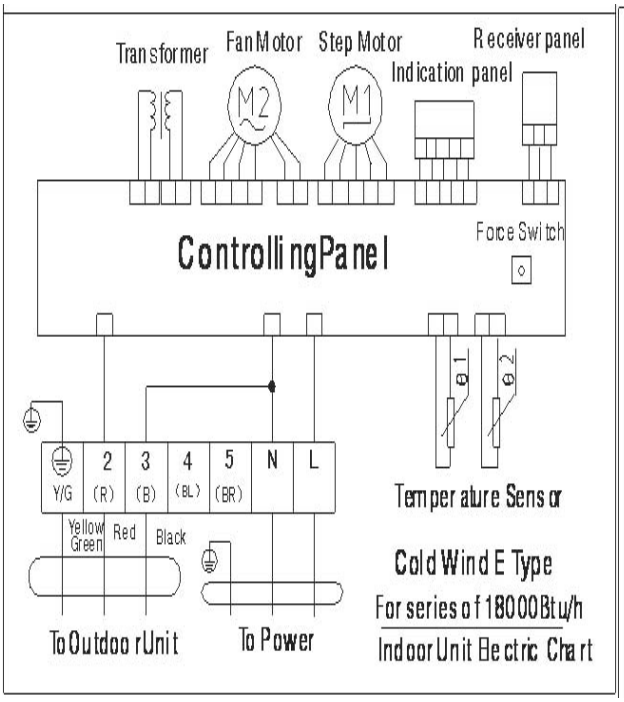

Cooling & Heating

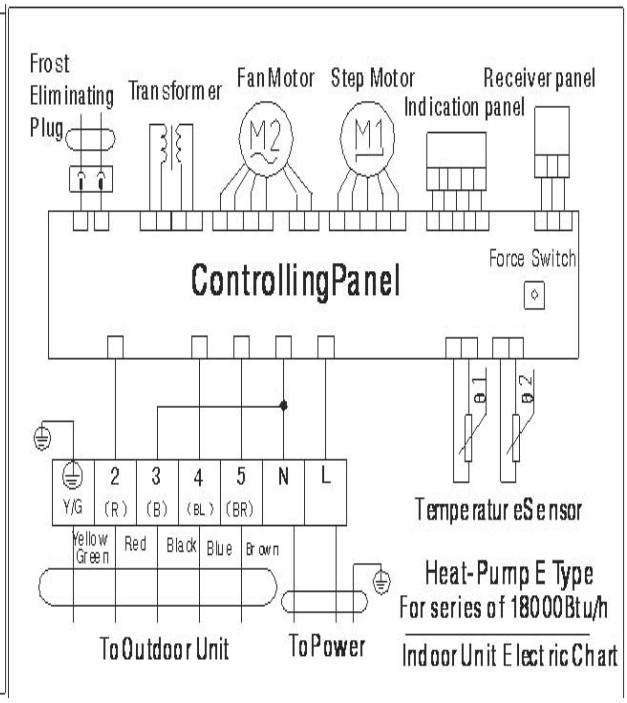

(3)24000 BTU

1. Indoor Unit

Cooling Only

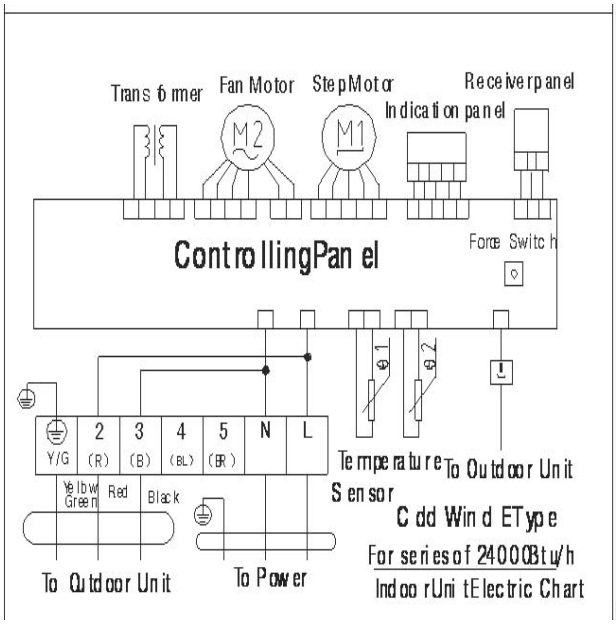

Cooling & Heating

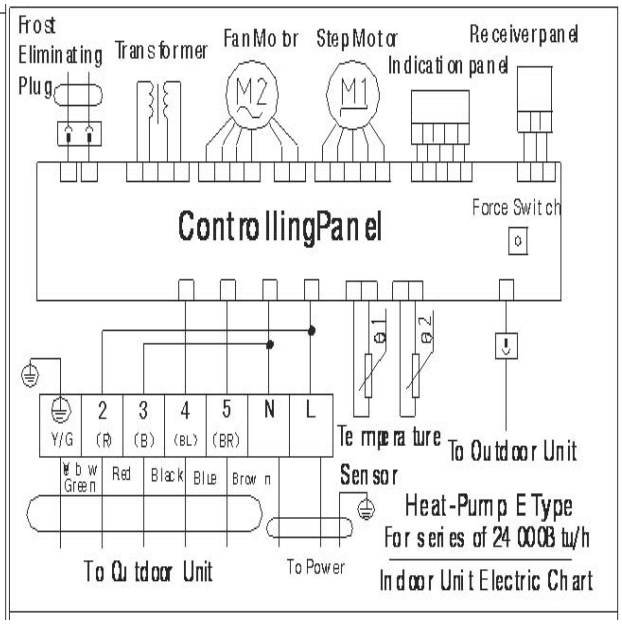

2. Outdoor Unit

Cooling Only

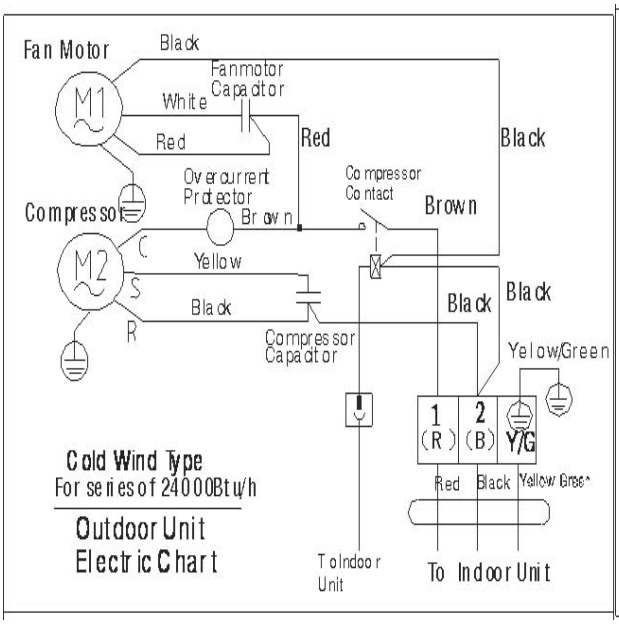

Cooling & Heating

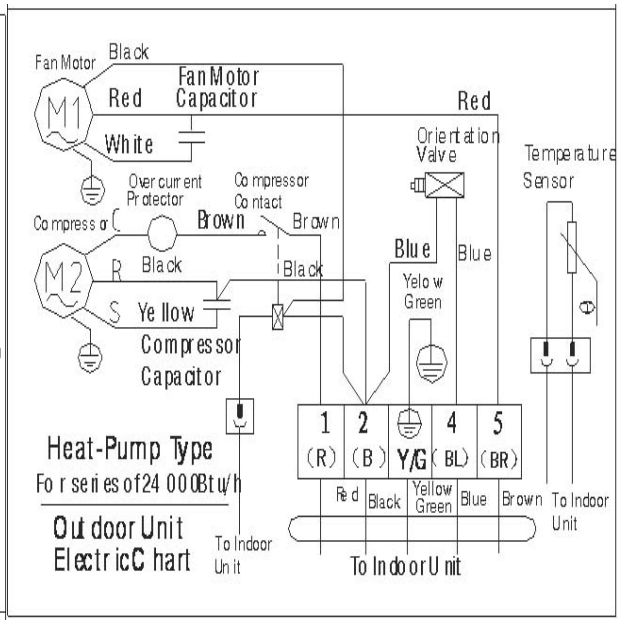

Operation Details

(1)The basic function introduction of the split wall-mounted type electric-controller (9000BTU~12000BTU)

1. The basic conditions for the operation of the controller

⑴The applicable voltage range of the electrical power: The input voltage 175 V – 253V;
⑵The input AC current frequency: 50Hz；
⑶The operating temperature for electric controller: （-10~+70）℃;
⑷The operating moisture for electric controller: RH20%~RH90%;
⑸The indoor fan: RP plastic-sealed motor, three impulse feedback signal;
⑹The outdoor fan: tap iron-shell motor, only one speed range and the normal working current shall be lower than 1.5A;
⑺The normal working current of the four-way valve: lower than 1A/220VAC;
⑻The Swing Motor: DC12V, Four phase eight step stepping motor;
⑼Compressor: Single-phase power supply, the normal working current shall less than 15A.

2. Functions of the electric controller

The function of the controller consists of the following parts:
⑴The remote control receiving function;
⑵LED/ Digital displaying function;
⑶Force operation function;
⑷The air vane's automatic swing function and the position setting function;
⑸The buzzer's driving function;
⑹The indoor fan's driving function;
⑺The timing on-off function;
⑻The compressor restarting protection function;
⑼The indoor heat-exchanger overheating protection function under heating mode;
⑽The automatic defrosting and resume function under heating mode;
⑾The anti-cold air function under heating mode;
⑿The anti-freezing function under cooling and defrosting modes;
⒀Self-detecting function.

3. The main functions specification

(1)The specialty terms and their express:

TA: Stands for the indoor ambiance temperature;
TE: Stands for the indoor evaporator temperature;
TS: Stands for the setting temperature;

(2)Emergency switch

①The air-conditioner turns off if press on this button when the air-conditioner is working; The air-conditioner turns on if press on this button when the air-conditioner is off, and it will work in an automatic mode after press on this button. Then the indication light twinkles for 20 seconds and the air-conditioner does not start working until the working mode to be selected by the system;

The air-conditioner automatically selects one of cooling, dehumidification, and heating mode as the working mode according to the indoor air temperature.

a) When TA≥Ts+2℃, the controller enters into the cooling mode and follows the mode in

working. The setting temperature herein is 24℃ and the setting wind speed is high fan;
b) When Ts-2℃<TA<Ts+2℃, The setting temperature is 24℃ and the setting wind speed is low fan; the running light is always bright .
c) When TA≤Ts+2℃, the controller enters into the heating mode and follows the mode in working (Notes: This process with 3℃ compensatory temperature; the fan will not stop until the remaining heat is blew off). The setting temperature herein is 24℃ and the setting wind speed is low fan;
When the compressor continues to be in the OFF state for 6 minutes by the thermostat control in either of the cooling or heating , it is switched to the monitoring . The indoor fan's louver keeps its previous state, remote control's instruction for the louver is applicable.
② Press this emergency-switch without release at least 5 seconds until the ring of the buzzer rings twice. The controller enters into the trial operation. The trial operation time is 30min:
a) The sensor of the air-inlet temperature doesn't function in the period of trial operation. The compressor starts work after 3min delay protection (The primary running has no 3min safety-guard protection), the wind speed of the indoor fan is automatic fan, the running mode is cooling mode, and the wind door is maximum opening. The position of the wind door is same as cooling mode; Over-current protection function is effective in test of run.
b) There are no anti-freezing protection and high temperature-preventing protection during trial operation.

(3)Automatic run mode

When controller select an automatic working mode, the indication light twinkles for 20 seconds and the air-conditioner does not start working until the working mode to be selected by the system; The air-conditioner automatically selects one of the cooling, and heating mode as the working mode according to the indoor air temperature .
①The cooling operation starts when the detected room temperature (TA) is given in the formula「TA≥Ts+2℃」. Set temperature is the remote controller's setting temperature . The fan will operate at set speed.
② The monitoring continues when the detected room temperature (TA) is in the following formula 「Ts-2℃< TA < Ts+2℃」. Set temperature is the remote controller's setting temperature. The fan will operate at low speed and the running indicator light will be lightful continuously till the monitoring process finishes.
③The heating operation starts when the detected room temperature (TA) is given in the formula「TA≤Ts-2℃」(Notes: This process with 3℃ compensatory temperature; the fan will not stop until the remaining heat is blew off). Set temperature is the remote controller's setting temperature . The fan will operate at set speed.
When the compressor continues to be in the OFF state for 6 minutes by the thermostat control in either of the cooling or heating , it is switched to the monitoring . The indoor fan's louver keeps its previous state, remote control's instruction for the louver is applicable.

(4)Cooling mode

The setting temperature shall be set by the remote control. The temperature controlling range is 16℃ - 32℃. The setting temperature can be adjusted through the button of "+" "-". The setting wind speed can be adjusted through the button of "wind speed selection" in the selection of the four wind speed types, such as strong wind, high wind, low wind and mute wind. The four-way valve always be closed under this mode. The other action is as following:

① When TA - TS≥1℃，after the compressor meet the 3 minutes delay protection, the compressor and the outdoor fan start running;
② When TA = TS，maintain the previous status;
③ When TA - TS≤-1℃，after the compressor meet the 3 minutes protection condition, the compressor and the outdoor fan turn off;
④ The setting wind speed can be adjusted by the remote control during the ongoing cooling process, and the interior fan still retains working;
⑤When it is given the condition「TE ≤ 2℃」(Tc=temperature of the indoor coil),which lasts for 10 seconds , meanwhile compressor runs for more than 30 seconds, the outdoor fan will be turned off ; When it is given the condition「TE ≤ 0℃」(TE=temperature of the indoor coil),which lasts for 10 seconds , meanwhile compressor runs for more than 5 minutes, compressor will be turned off and indoor fan runs according to the set speed ; When it is given the condition「TE ≥ 7℃」(TE=temperature of the indoor coil), system will quit aforesaid protective mode.
⑥ This mode includes the functions of timing, sleeping, auto-restart (optional), negative ion (optional), I feel（optional）;
⑦ When the cooling ongoing，the button of the “Swing” can control the swing and stop of the horizontal air-blade;
⑧ Automatic wind-speed control：

TA - TS≥3℃，wind-speed works in high wind;
TS +1℃≤TA＜TS +3℃，wind-speed works in middle wind;
TA – TS＜1℃，wind-speed works in low wind;

Without 3 minutes delay when the wind speed turns from the high wind from the low wind, otherwise with 3 minutes delay;
⑨ Being initially electrified, the compressor doesn’t have the 3 minutes extension/delay protection, the outdoor fan starts after 2 seconds of the compressor’s start; TS＞TA set by the remote control, the compressor turns off immediately with no need of 3 minutes delay protection;

(5)Dehumidification mode

①The four-way valve always turns off when the dehumidification mode is ongoing. The control range of the temperature is: 16℃ - 32℃.
②Under the dehumidification mode, after the 3 minutes protection conditions being meet satisfactorily, the performance of the compressor and the outdoor fan is as following:
a)TA ≥ TS+2℃，the compressor and the outdoor fan works continuously, the wind speed retains the setting wind speed;
b)TS ≤ TA < TS+2℃，the compressor and the outdoor fan runs for 10minutes and stops for 6minutes，The indoor fan turns off during the compressor’s 3 minutes stopping period and keeps on working in breeze mode under other conditions;
c)TA < TS，the compressor and the outdoor fan stop working, and the indoor fan start to work in breeze mode after stopping for 3 minutes；
Automatic wind-speed control：

TA - TS≥5℃，the wind speed is on high wind;
TS +3℃≤TA＜TS +5℃，the wind speed is on middle wind;
TS +2℃≤TA＜TS +3℃，the wind speed is on low wind;
TS≤TA＜TS +2℃，the wind speed is on fitful breeze;
TA＜TS，the indoor fan is off during the 3 minutes delay of the compressor, and 3 minutes

later, the wind is at breeze speed.
③The primary electrifying to compressor has no 3 minutes protection delay, the outdoor fan starts 2 seconds later after the start of the compressor;
④When the indoor fan runs, the horizontal air-blade can be set as free swing, and the swing condition is same as the one under cooling mode；
⑤When TE ≤ TE1 last for 10seconds and the compressor runs continuously for above 5minutes，if turn off the compressor and outdoor fan, the indoor fan runs at the setting wind speed; If TE ≥ 7℃，quit the protection；
⑥This mode includes the functions of timing, sleeping, auto-restart (optional), negative ion (optional), I feel (optional).

(6)Ventilation mode
Under ventilation mode, the outdoor unit is always off, and the indoor fan runs according to the default wind-speed. The remote control can be set with three types wind-speed, e.g. high fan, low fan and silent fan except the strong fan; The operation condition of the air door is same as the one under the refrigeration mode; The mode includes the function of timing, auto-restart (optional), negative ion (optional), I feel (optional）.

(7)Heating mode
The default temperature is determined by the remote control and to be within the range of 16℃ - 32℃, which can be adjusted by the button of “+” and “-”. Press the button of “fan speed selection” for choosing the wind speed from the four gears of automatic fan, high fan, medium fan, and low fan. The other conditions are as following, when:
①TA-3-TS≤-1℃，if after three minutes delay time as for protection purpose, the compressor and the outdoor fan start, the indoor fan works in cold-wind prevention condition, the TA shown on the digital display has 3℃ temperature compensation.
②TA-3-TS≥1℃，if the compressor last continuously running for 3minutes, the compressor and the outdoor fan stop, the indoor fan keeps on working under anti cold-wind condition. The TA shown on the digital display has 3℃ temperature compensation.
③TA-3=TS，retain the previous status；
④Automatic wind speed control, when:
TA ＜ TS，wind speed in high fan；
TS ≤ TA＜TS +2℃，wind speed in middle fan；
TA ≥ TS + 2℃，wind speed in low fan；
When wind speed turns from the low fan to high fan without 3 minutes protection delay; wind speed turns from the high fan to low fan with 3 minutes protection delay；
⑤When the heating process is ongoing, the button of the “Swing” can control and stop the swing leaves; When swing works freely, the maximum angle of the swing leaves is 50°e.g. the swinging status between 3-5 (refer to picture 3);
⑥There is no 3 minutes’ delay protection for electrifying the compressor initially. The compressor starts 10 seconds later after the start of the four-way valve. The outdoor fan starts 2 seconds later after the start of the compressor; Low down TS to be ＜TA-3，then the compressor turns off immediately without the restriction condition of 3 minutes protection delay;
⑦The mode includes the functions of timing, sleeping, auto-restart (optional), negative ion (optional), I feel（optional）

⑧The four-way valve starts immediately once being electrified.10 seconds later the compressor starts; Under the compressor opening condition, the four-way valve shuts off after 2 minutes and 50 seconds delay protection when turn off or switch the controller; The four-way valve turns off immediately after turning off the controller when the compressor is off;
⑨Anti cold-wind and Residual-heat Removing function:
TE controls the wind speed of the indoor fan, and the specific conditions are as below:
The anti cold-wind status when the compressor runs:
a) When TE in rise status and at the moment of TE＜TE1，the indoor fan turns off；TE2≤TE＜TE3，the indoor fan blows the breeze; TE3≤TE＜TE4，the indoor fan blows the mute wind; TE≥TE4，the indoor fan blows the set wind speed;
b)When TE in fall status and at the moment of TE＞TE5，the indoor fan blows the set wind speed; TE6＜TE≤TE5，the indoor fan blows the mute wind；TE7＜TE≤TE6，the indoor fan blows the breeze；TE≤TE7，the indoor fan turns off.

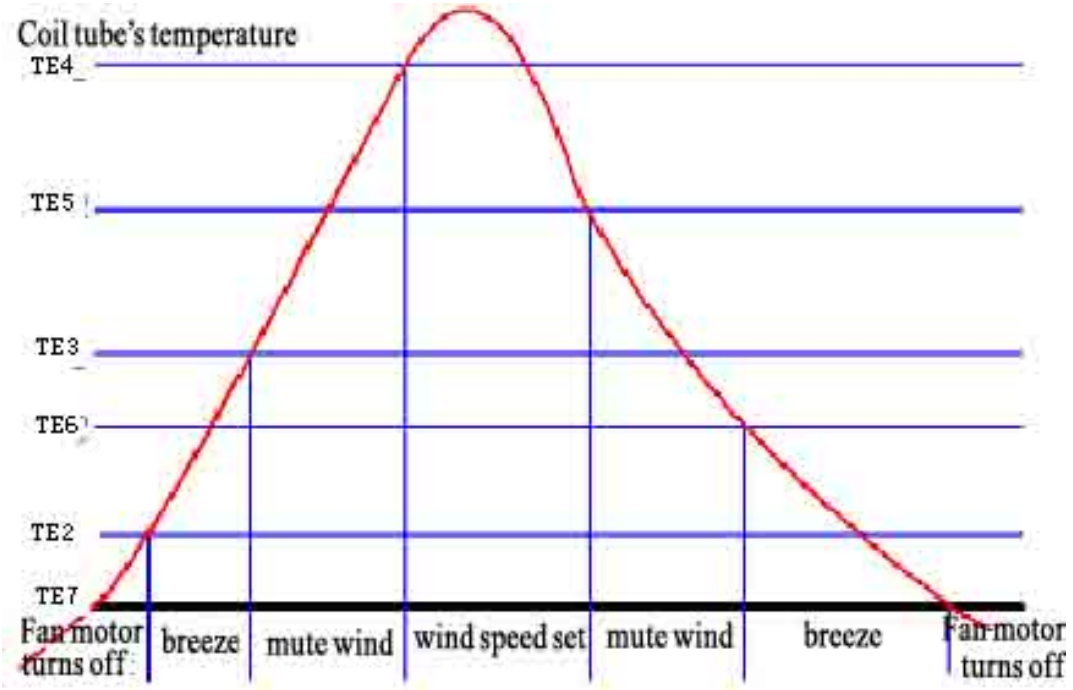

The anti cold-wind status when the compressor stops working:
a）Monitoring. TE＞30℃，the indoor fan blows breeze for 30 s , then indoor fan turns off；once there is TE≤30℃ in this 30 s，indoor fan turns off；
b）Monitoring. TE≤30℃，indoor fan turns off；

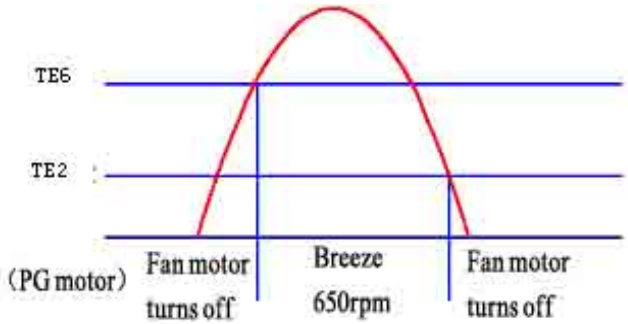

The residual-heat Removing function：
When TE＞TE8，the indoor fan runs in breeze，if ≤TE8，the indoor fan stops working, and the time in removing residual heat ≤10seconds，Within the 10 seconds of residual heat removing,

if TE< TE8, the indoor fan stops immediately.
⑩Overheated protection：
a) When heating function runs，if TE≥TE9 and last for 10seconds，the outdoor fan stops；if TE≥TE10 and last for 10seconds, then stop the compressor；When TE< TE11 and after the 3 minutes protection delay, the compressor resumes normal working.
b) This temperature protection is valid only when the TE temperature sensor runs normally.

(8)The auxiliary electric heating function

①The electric heating function may not start unless the heating mode runs normally e.g. the compressor starts, the outdoor fan runs, the four-way valve is electrified, the indoor fan is on as well as the availability of the below conditions:

a)TE < TE12；
b)TA < TA3；
c)TS – TA ≥ 3℃；
d)The compressor runs continuously in heating mode for 4min；

②The auxiliary electric heating may withdraw working if meet one of the below conditions:

a)TA > TA3；
b)TS – TA < 2℃；
c)TE > TE11；

③If one of the compressor, four-way valve and indoor fan doesn't work or there is error feedback from the indoor fan, the auxiliary electric heating withdraw from work;
④If the sensor of TE is damaged and the turn-off without non-electricity occurred in the ongoing auxiliary electric heating process, the indoor fan turns in the low speed wind operation for 40 seconds and stops；

(9)Intelligent defrosting function

①Under the operation of the intelligent defrosting mode, the air-conditioner starts the defrosting process if satisfying the requirement of one of the below five conditions (the sub-conditions included shall all be satisfied). During the defrosting process, the sleeping light is twinkling:

● a) The outdoor fan starts the overloading protection and the outdoor fan stops;
b) Restart the outdoor fan after stop and the continuous running time over than 10 minutes;
c)The accumulated operation time of the compressor ≥45min；
d)The continuous operation time of the compressor≥20min；
e)TE ≤ TE12。

● a) After the 5 minutes operation of the heating mode or 5 minutes later after the defrosting process, starts the capture motion for the max. difference value between TE and TA, when the difference between TE and TA being reduced up than X min and the time lasts≥3min；
b)The continuous operation time of the compressor≥5min；
c)The accumulated operation time of the compressor≥45min；
d)TE ≤ TE12；

Note：When the wind speed correction available, if the wind speed of the indoor fan drops by one gear, the temperature difference correction value shall be -1℃，if the wind speed of the indoor fan rises by one gear, the temperature difference correction value shall be +1℃.

● a)The accumulated operation time of the compressor≥3hour；

b)The continuous operation time of the compressor≥20 minutes；

c) The difference value between TE and TA less than Y℃.

● a)The difference value between TE and TA less than Y℃ and continuously last for 5minutes；

b)The accumulated operation time of the compressor is over than 45minutes；

c)The continuous operation time of the compressor is over than 20minutes；

The air-conditioner starts the defrosting process if satisfying the conditions, and records the TE value then before defrosting starts. Compare the TE value after defrosting with the one before defrosting, if the value of the later is not 3℃ more than the former one, it will not start the defrosting process according to this condition until the mode conversed and the air-conditioner to be restarted for heating or after another defrosting process;

●The air-conditioner starts time counting after overheating protection delay (the outdoor fan stops) and starts an force defrosting process two hours later.

②The intelligent defrosting process quit if satisfying one of the below four conditions:

a)The duration of the intelligent defrosting process≥9min；

b)After the 4 minutes defrosting process，if TE≥0℃ and the TE rise by 2℃ within 10seconds；

c)After the 5 minutes defrosting process，if TE≥5℃；

d)Test the current of the compressor 1 minute later after compressor starts, When the current of the compressor ≥6A（3.2Kw、3.5Kw wall-mounted unit require the current of the compressor≥8A）and continuous lasts for 5 seconds.

(10)The sleeping control function

①The sleeping control function is valid during the automatic, cooling, dehumidifying and heating mode. The wind speed of the indoor fan falls by one gear after starts the sleeping control function and the sleeping indication lamp on;

②Press the button of “sleeping” and start the sleeping process. The default temperature rises by 1℃ to the ongoing cooling mode after 1 hour running; the default temperature falls by 2℃ to the ongoing heating mode after 1 hour running; after another 1 hour running, the default temperature for the ongoing cooling process rises by 1℃ and falls by 2℃ for the ongoing heating process. The sleeping process last for 7 hours until power-off.

③The modes switch function is still valid after enter into the sleeping process, but will quit after modes switched. The air-conditioner runs at the temperature value of “new default temperature + correction temperature” if press the button of temperature “+”.

④Under the sleeping status, press the button of “sleeping” again or press the modes option and on-off button to quit sleeping function and end the sleeping process.

The sleeping process under cooling mode:

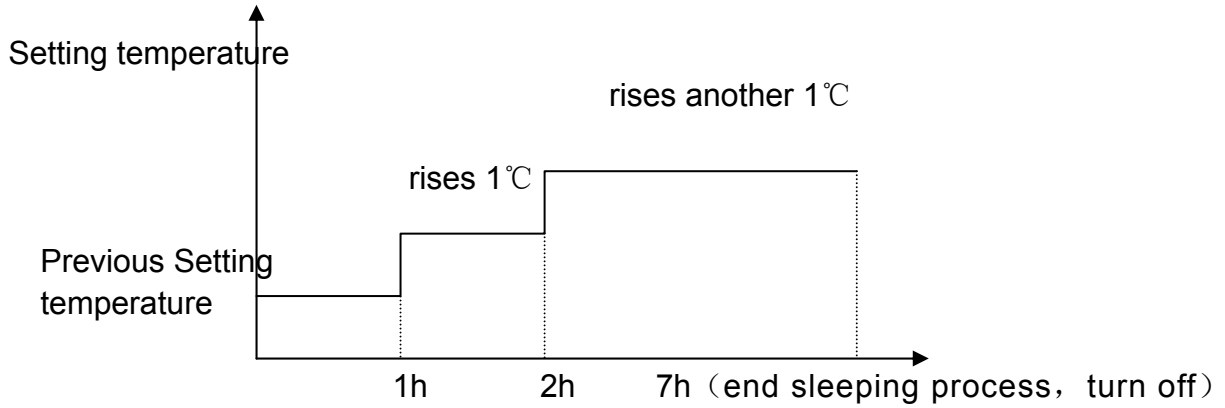

The sleeping process under heating mode:

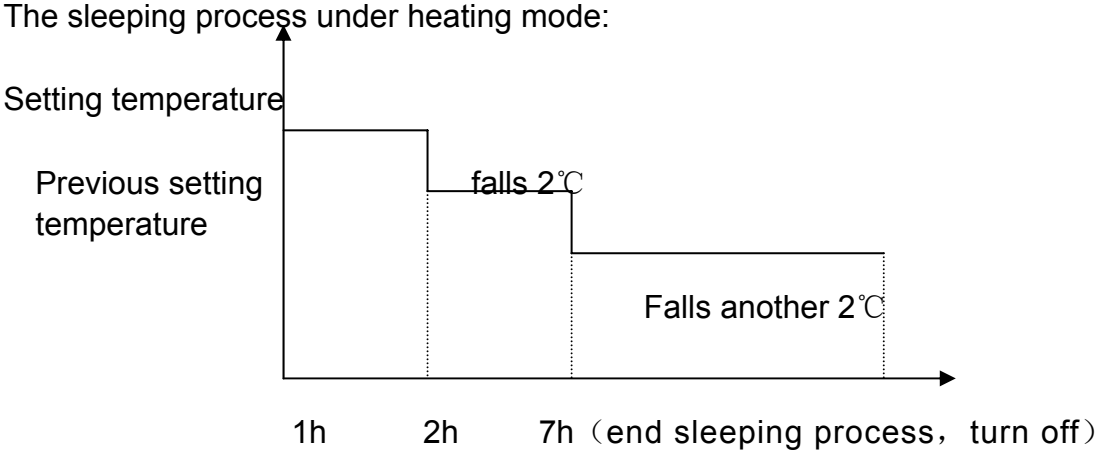

(11)Timing control function

①The longest Timing time is 24 hour and to be counted per minute, single timing method，the timing function will not be cancelled due to the modes changed, and the timing indication light on after completing the timing setting.

②Timing power-off：The timing power-off function can be set only under the working condition of the air-conditioner. The timing range is 1min-24h，and the air-conditioner turns off automatically once the time is over.

③Timing power-on：The timing power-on function can be set only under the working condition of the air-conditioner. The timing range is 1min-24h，and the air-conditioner turns on automatically once reaching the time.

④The restart and power-off motions happen after completion of the Timing setting will cause the automatic cancellation of the previous timing and sleeping setting function.

(12)Self-detecting function

Press the Emergency button and electrify the air-conditioner, the self-detecting process starts after twice short buzz from buzzer:

Start the electric heating, run the indoor fan at a high fan speed, open the air door to be the maximum →the digital display and three indicating light on in 1 second→ digital displays “11”、“22”、“33”、“44” in turn and 1second for each of them →Run light on 1 second →Timer light on 1 second →Sleep light on 1 second →Each phase of the stepping motor’s motion in 1 second →the indoor fan runs for 1 second at low fan speed and middle fan speed separately→the compressor’s motion for 1 second →The four-way valve’s motion for 1 second →Outdoor fan’s motion for 1 second →Negative generator’s motion for 1 second →buzzer deliver one short tone→Electric heating runs 30 Seconds and stops, then the air conditioner turns into waiting status, the self-detecting function ends.

(13)Fault indication

When there is faults happen to the air-conditioner, the Timer lights on. The control light panel will indicate the corresponding fault codes, which are specified as the following:

FAULT	Digital Display	Phenomenon
PG abnormity	“E4”	AC stopped
TA abnormity	“E1”	AC stopped
TE abnormity	“E3”	AC stopped

After the indoor motor electrified, if there is no impulse signal feedback by the indoor motor detected within 10 seconds, cut off the output voltage supplied to the indoor fan from the controller. After 30seconds waiting time, re-electrify the indoor fan. If still has no impulse signal feedback by the indoor motor being detected within 10 seconds, the controller stays in waiting and the digital display indicates the corresponding fault code is E4.Turn off the air-conditioner by remote control, and the fault display will not show.

(14)The definition to swing angle of the air door

Picture 3 shows the swing angle of the step motor of E series wall-mounted type air-conditioner under 4.8kW (Except 4.8 kW);

①Once being electrified, the air door effect a motion of total closed, and the swinging speed is 22°/s；

②After the air-conditioner turns on, the air door effect a motion of total opening, and swing to the corresponding primary position. The primary position for heating mode is the position 5(Picture 3), for cooling mode is the position 2 (Picture 3).

③The air door “Swing” on the remote control can set the swinging mode to be automatic swing or hand swing；

④The maximum swing angle of automatic swing under heating mode is 50°，e.g. the angle between position 3-5 in picture 3；the angle under cooling mode is 50°e.g. the angle between position 2-4 in picture 3；The swinging speed is 5.5°/s；

⑤After the air-conditioner being turned on and electrified, if the air door is not set “Swing”, the swing angle will swing to the corresponding position according to the different modes. For example: the corresponding position under cooling mode is position 2(Picture 3), heating mode is position 5(Picture 3). The air door resumes the automatic swing after the fan starts. If the setting swing mode is hand swing, the swing angle will never change；

⑥After turning off the air-conditioner and stopping the running of the indoor fan, the air door shut off automatically;

⑦Enter into the automatic mode by pressing the Emergency button, the air door opens after the setting mode of the system starts. Before the starting of the setting mode, the air door parks at the datum mark of cooling mode.

The below picture shows the swing angle of E type:

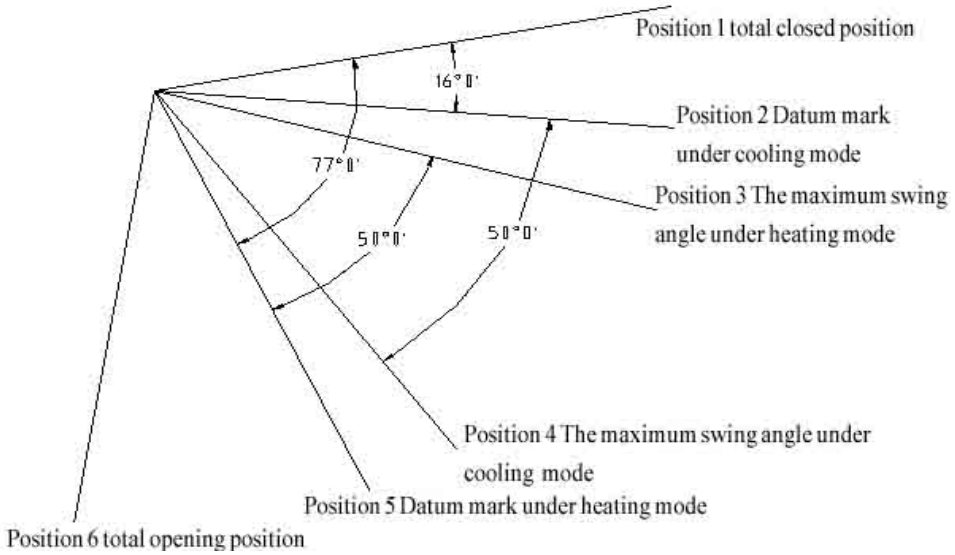

Picture 3

(15)The wind speed selection function

The resistance value of the wind speed option is as below:

High Fan	R24	Middle Fan	R28	Low Fan	R26
1330	1.2K	1250	1.2K	1100	1.2K
1280	3K	1200	3K	1050	3K
1230	5.1K	1150	5.1K	1000	5.1K
1180	8.2K	1100	8.2K	950	8.2K
1130	12K	1050	12K	900	12K
1080	20K	1000	20K	850	20K
1030	36K	950	36K	800	36K
980	82K	900	82K	750	82K

Note: The mute wind speed under heating mode is 850r/min and 800r/min for non-heating mode. The breeze speed is 650r/min.

The controller added the function of high efficient wind speed, which bases on the previous strong fan plus 100r/min.

(22)Optional functions

The below functions' program are already write into the Main chip of the PCB and to be performed if being equipped with the corresponding hardware. For example, the "Auto-restart" function shall be equipped with the corresponding E^2 main chip, the "I feel" function shall be equipped with the corresponding remote controller, and the "Negative ion" shall be equipped with the corresponding relay.

①Auto-restart control function

a)The setting method for Auto-restart function: After the controller being electrified, press the sleeping button on the remote control for 10 times within 5seconds towards to the controller, later, if the Auto-restart function is successfully set, there are four sounds delivered from the buzzer; If the Auto-restart function need to be cancelled, press the sleeping button of the remote control for 10 times within 5seconds towards to the controller, later, if the Auto-restart function is successfully cancelled, there are two sounds delivered from the buzzer otherwise

there is no sound；
b) The contents memorized by the Auto-restart function are: operation modes, setting wind speed, setting temperature, negative ion function, swing status and on-off condition.
c) After the setting of non-electricity memory function succeeds, when the non-electricity event happens after turning off the air-conditioner normally, if re-electrify and turn on the air-conditioner, there is no 3 minutes protection delay occurred to the compressor; when the non-electricity event happens accidentally under the power-on status, if re-electrify and turn on the air-conditioner, there is 3 minutes protection delay occurred to the compressor;
d) If the setting of sleeping and timing functions occurs before the non-electricity event after air-conditioner owns the Auto-restart function, the default condition of the controller is power-off status after being electrified again.
②I feel function
a)The setting method for I feel function: Press the “I feel” function button on the remote controller, the controller will effect the I feel function once receiving the signal, and the controller herein will default the temperature value of the sensor on the remote control as the previous TA of the controller（Except the defrosting case）;
b) The quitting method for the I feel function：
●Press the I feel function button, the former I feel function setting will be cancelled at once;
●Position the remote controller towards to the receiving window of the controller, the remote control may deliver the signal to the controller every 3minutes. If the controller fails to receive the signal from the remote control, the I feel function will be automatically cancelled, and the TA control the temperature according to the temperature value detected by the TA sensor of the PCB.
c) When the I feel function starts, the controller doesn’t test the former TA sensor on the PCB.
③Negative ion function
When the indoor fan is working, press the negative ion function button on the remote control, and the negative ion relay in the controller turns on for starting the output of the negative ions; When the negative ion function is on, press the negative ion function button on the remote control, and the negative ion relay in the controller turns off for stopping the output of the negative ion;

(2)The basic function introduction of the split wall-mounted type electric-controller (18000BTU~24000BTU)

1. The basic conditions for the operation of the controller

⑴The applicable voltage range of the electrical power: The input voltage 175 V – 253V;
⑵The input AC current frequency: 50Hz；
⑶The operating temperature for electric control: （-10~+70）℃;
⑷The operating moisture for electric control: RH20%~RH90%;
⑸The indoor fan: RP plastic-sealed motor, three-impulse feedback signal;
⑹The outdoor fan: tap iron-shell motor, only one speed and the normal working current shall be lower than 1.5A;
⑺The normal working current of the four-way valve: lower than 1A/220VAC;
⑻The Swing Motor: DC12V, Four phase eight step stepping motor;
⑼Compressor: Single-phase power supply, the normal working current shall less than 20A.

2. Partition of the controller’s function

The function of the controller consists of the following parts:
⑴The remote control receiving function;

⑵Force operation function;
⑶The air vane's automatic swing function and the position setting function;
⑷The buzzer's driving function;
⑸The indoor fan's driving function;
⑹The timing on-off function;
⑺The compressor restarting protection function;
⑻The indoor heat-exchanger overheating protection function under heating mode;
⑼The automatic defrosting and reheating function under heating mode;
⑽The anti-cold air functions under heating mode;
⑾The anti-freezing function under cooling and defrosting modes;
⑿Self-detecting function

3. The Specification of the main function

⑴he specialty terms and express:

TA: stands for the indoor ambiance temperature;
TE: stands for the indoor evaporator's temperature;
TS: stands for the setting temperature;
TW: stands for the outdoor condenser's temperature;

⑵Emergency switch

①The air-conditioner turns off if press on this button when the air-conditioner is working; the air-conditioner turns on if press on this button when the air-conditioner is off, and it will work in an automatic mode after press on this button. Then the indication light twinkles for 20 seconds and the air-conditioner does not start working until the working mode to be selected by the system; the air-conditioner automatically selects one of the cooling, dehumidification, and heating mode as the working mode according to the indoor air temperature.

a) When TA≥27℃, the controller enters into the cooling mode and follows the mode in working. The setting temperature herein is 24℃ and the setting wind speed is strong wind;

b) When 20℃< TA < 27℃, the controller enters into the dehumidifying mode and follows the mode in working. The setting temperature is 24℃ and the setting wind speed is strong wind;

c) When TA≤20℃, the controller enters into the heating mode and follows the mode in working (The cooling only type runs with the ventilation mode). The setting temperature herein is 24℃ and the setting wind speed is strong wind;

d)This mode includes the functions of timing, sleeping, auto-restart (optional), negative ion (optional), I feel（optional）; The system mode will not change along with the variety of the indoor temperature after being selected. The default status of the horizontal air-blade is still. The operation can be adjustable by receiving the remote signal.

Press this force on-off button without release at least 5 seconds until the ring of the buzzer rings twice. The controller enters into the trial operation the trial operation time is 30min:

●The sensor of the air-inlet temperature doesn't function in the period of trial operation. The compressor starts work after the 3min delay protection (The primary electrifying has no 3min delay protection), the wind speed of the indoor fan is high wind, the running mode is cooling mode, and the wind door is maximum opening.

●There are no anti-freezing protection and high temperature-preventing protection during trial operation.

⑶Automatic mode

When controller selects an automatic working mode, the indication light twinkles for 20 seconds and the air-conditioner does not start working until the working mode to be selected by the system; The air-conditioner automatically selects one of the cooling, dehumidification, and heating mode as the working mode according to the indoor air temperature .

①When TA≥27℃, the controller enters into the cooling mode and follows the mode in working. The setting temperature herein is 24℃ and the air-conditioner runs according to the setting wind speed;

②When 20℃<TA<27℃, the controller enters into the dehumidification mode and follows the mode in working. The setting temperature is 24℃ and the air-conditioner runs according to the setting wind speed;

③When TA≤20℃, the controller enters into the heating mode and follows the mode in working (The cooling only type follow the ventilation mode). The setting temperature herein is 24℃ and the air-conditioner runs according to the setting wind speed;

④This mode includes the functions of timing, sleeping, auto-restart(optional), negative ion(optional),I feel（optional）;

⑤The system mode will not change along with the variety of the indoor temperature after being selected. The new working mode will be selected again after air-conditioner turns off or mode switch.

⑷Cooling mode

The setting temperature shall be fixed by the remote control. The temperature-controlling range is 16℃ - 32℃. The setting temperature can be adjusted through the button of “+” “-”. The setting wind speed can be adjusted through the button of “wind speed selection” in the selection of the four wind speeds type, such as strong wind, high wind, low wind and mute wind. The four-way valve always is closed under this mode. The other action is as following:

①When TA - TS≥1℃，after the compressor meet the 3 minutes delay protection, the compressor and the outdoor fan start running;

②When TA = TS，maintain the previous status;

③When TA - TS≤-1℃，after the compressor meet the 3 minutes protection condition, the compressor and the outdoor fan turn off;

④The setting wind speed can be adjusted by the remote control during the ongoing cooling process, and the interior fan still retains working;

⑤When the status of TE ≤ 0℃ last for 10 seconds and the compressor keeps working for above than 5 minutes, turn off the compressor and outdoor fan, the indoor fan keep working according to the setting wind speed; Quit from such protection if TE≥ 7℃;

⑥This mode includes the functions of timing, sleeping, auto-restart (optional), negative ion (optional), I feel（optional）;

⑦When the cooling ongoing，the button of the “Swing” can control the swing and stop of the horizontal air-blade;

⑧Automatic wind-speed control：

TA - TS≥3℃，wind-speed works at high wind;

TS +1℃≤TA＜TS +3℃，wind-speed works at middle wind;

TA – TS＜1℃，wind-speed works at low wind;

Without 3 minutes delay when the wind speed turns into the high wind from the low wind,

otherwise with 3 minutes delay;
⑨Being initially electrified, the compressor doesn't have the 3 minutes delay protection, the outdoor fan starts after 2 seconds of the compressor's start; When TS＞TA set by the remote control, the compressor turns off immediately with no need of 3 minutes delay protection;
⑩When TE ≥ 64℃ and after last for 10seconds, the compressor and the outdoor fan turn off; If meet the 3 minutes delay condition and TE ≤ 62℃, the compressor can start normally. When the air-conditioner is under overheating protection, if the wind speed setting is by hand, the indoor fan unit will run at the setting wind speed; if the wind speed setting is automatic, the indoor fan unit runs at the low fan speed.

⑸Dehumidification mode

①The four-way valve always turns off when the dehumidification mode is ongoing. The control range of the temperature is: 16℃ - 32℃.
②Under the dehumidification mode, after the 3 minutes delay conditions being meet satisfactorily, the performance of the compressor and the outdoor fan is as following:
a)TA ≥ TS+2℃，the compressor and the outdoor fan works continuously, the wind speed retains the setting wind speed;
b) TS ≤ TA < TS+2℃，the compressor and the outdoor fan runs for 10minutes and stops for 6 minutes，The indoor fan turns off during the compressor's 3 minutes stopping period and keeps on working in breeze mode under other conditions;
c)TA < TS，the compressor and the outdoor fan stop working, and the indoor fan start to work in breeze mode after stopping for 3 minutes；
Automatic wind-speed control：

TA - TS≥5℃，the wind speed is at high wind;
TS +3℃≤TA＜TS +5℃，the wind speed is at middle wind;
TS +2℃≤TA＜TS +3℃，the wind speed is at low wind;
TS≤TA＜TS +2℃，the wind speed is at fitful breeze;
TA＜TS，the indoor fan is off during the 3 minutes delay of the compressor, and 3 minutes later, the wind is at breeze speed.

③The primary electrifying to compressor has no 3 minutes protection delay, the outdoor fan starts 2 seconds later after the start of the compressor;
④When the indoor fan runs, the air door can be set as free swing, and the swing condition is same as the one under cooling mode；
a)When TE ≤ -2℃ last for 10seconds and the compressor runs continuously for above 5minutes，if turn off the compressor and outdoor fan, the indoor fan runs at the setting wind speed; If TE ≥ 7℃，quit from the protection；
b) When TE ≥ 64℃ last for 10seconds, the compressor and outdoor fan unit turns off. If meet the 3 minutes delay condition and TE ≤ 62℃, the compressor can start normally. When the air-conditioner is under overheating protection, if the wind speed setting is by hand, the indoor fan unit will run at the setting wind speed; if the wind speed setting is automatic, the indoor fan unit runs at the low fan speed.
⑤This mode includes the functions of timing, sleeping, auto-restart (optional), negative ion (optional), I feel (optional）.

⑹Ventilation mode

Under ventilation mode, the outdoor unit is always off, the indoor fan runs at the setting wind

speed, the remote control can set high fan, middle fan and low fan except automatic fan; The performance condition of the air door is same as the one under refrigeration mode; This mode includes the timing function, auto-restart (optional), negative ion (optional), I feel（optional）

⑺Heating mode

The setting temperature can be decided and adjusted by the remote control within the control range of 16℃ - 32℃ through the button of temp. Add “+” and temp. Reduce “-”. Press the button “wind speed option” to choose the wind speed among the options of automatic fan, high fan, middle fan and mute fan. The other conditions refer to the following:

⑴When TA-3-TS≤-1℃，if satisfying the 3 minutes protection delay condition for compressor, the compressor and outdoor fan start, and the indoor fan runs in accordance with the anti-cold wind condition.

⑵When TA-3-TS≥1℃，if satisfying the 3 minutes protection delay condition for compressor，the compressor and outdoor fan stop working, and the indoor fan runs in accordance with the anti-cold wind condition.

⑶When TA-3=TS，remain the previous status；

⑷Temperature display has the temperature compensation of 3℃

⑸Automatic wind speed control：

TA ＜ TS，run at high fan speed；

TS ≤ TA＜TS +2℃，run at middle fan speed；

TA ≥ TS + 2℃，run at low fan speed；

There is no 3 minutes protection delay when the wind speed turns to high fan from the low fan; there is 3 minutes protection delay when the wind speed turns to low fan from the high fan;

⑹When heating process ongoing, the button of “Swing” can control the swing leaves to swing or stop；

⑺Being electrified initially, the compressor has no 3 minutes protection delay. The compressor starts 10 seconds later after the start of the four-way valve, and the outdoor fan starts 2 seconds later after the start of the compressor; Set the TS ＜TA-3 by remote control，the compressor stops immediately and without the 3 minutes protection delay;

⑻This mode includes the timing function, sleeping function, auto-restart (optional), negative ion (optional), I feel（optional）.

⑼Being electrified initially, the four-way valve starts immediately ,and the compressor starts 10 seconds later; During the operation condition of the compressor, the four-way valve stops after 2min50s protection delay when stops the air-conditioner or switch mode;

In the case of compressor stops, the four-way valve stops immediately once stopping the air-conditioner；

⑽Anti-cooling wind and residual-heat Removing function:

The wind speed of the indoor fan is controlled by TE, and the specific conditions are as below:

Anti-cold wind when compressor runs：

①When TE is in rise status, if Te<30℃,the indoor fan turns off;30℃≤TE＜38℃,the indoor fan runs at low fan speed;Te≥38℃, the indoor fan runs at setting wind speed;

②When Te in fall status, if TE>34℃,the indoor fan runs at the setting fan speed;28℃＜TE≤34℃,the indoor fan runs at the low fan speed;TE≤28℃，the indoor fan turns off.

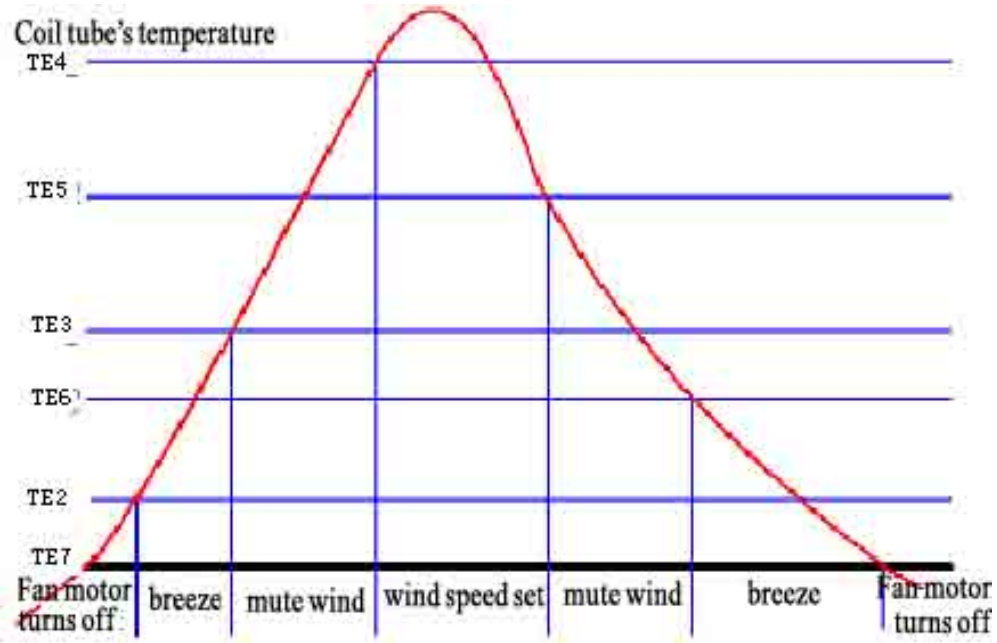

（Picture 1）

Anti-cold wind function when compressor stops：

① When TE is in the fall status, if TE>30℃,the indoor fan runs at low fan speed;TE30≤℃,indoor fan turns off;

② When TE is in the rise status, if TE35≥℃, the indoor fan runs at low fan speed; TE35<℃, indoor fan turns off;

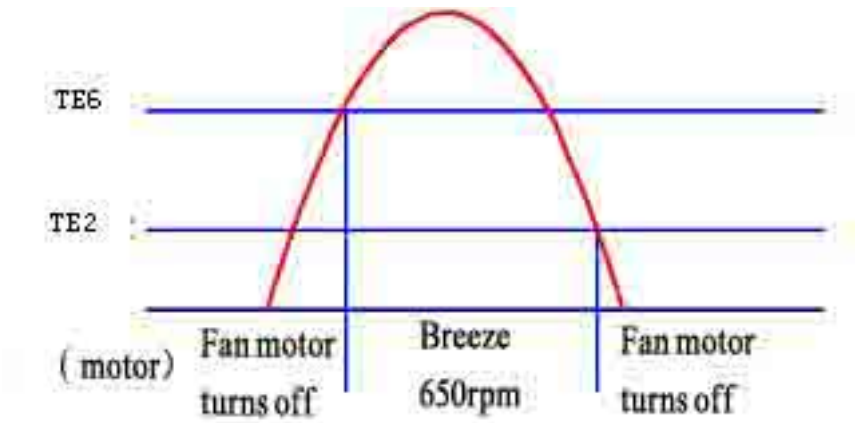

（Picture 2）

Residual-heat removing function after air-conditioner stops：

When TE＞35℃，the indoor fan runs at the low fan speed, if≤35℃,the indoor fan turns off, and air-conditioner stops for starting the process of residual heat removal and last for ≤10seconds, within the 10second of process of residual heat removal, if TE< 35℃, the indoor fan turns off at once.

⑾Anti-high temperature protection：

①when run on Heating mode，if TE≥57℃ and continuously last 10 seconds, the outdoor fan stops; if TE≥64℃ and last for 10s，the compressor stops again；When TE< 52℃ and satisfying 3minutes protection delay condition, the compressor resume normal work.。

②Such temperature protection is valid only if the TE sensor works normally.

⑿The defrosting function under heating mode

①When the outdoor sensor in good condition, the defrosting process starts, and the sleeping

light is twinkling：

a)TW≤-6℃ and continuously last for 2minutes；

b)The accumulated operation time of the compressor is over than 50 minutes, the interval time between defrosting process is 50 minutes(the accumulated time shall be recalculated if power off or remote control off), the continuous working time of the compressor is over 5 minutes.

Once the defrosting process starts, the compressor, the indoor fan and outdoor fan turn off, and the four-way valve turns off after 30 seconds, and after another 15 seconds the compressor turns on and starts the defrosting process.

②The defrosting process ending condition：（The defrosting process will quit if one of the below conditions to be satisfied）

a) Outdoor coil≥12℃；

b) Defrosting process last for 12minutes；

c) The defrosting process quits once change modes or air-conditioner turns off by remote control.

After the defrosting process, the compressor turns off and the outdoor fan turns on; After 55 seconds, the four-way valve turns on; after another 5 seconds, the compressor turns on; the air-conditioner resume the normal heating process, the indoor fan runs in the mode of anti-cold wind.

⑻ Auxiliary electric heating function

①When heating mode working normally, e.g. the compressor starts and the outdoor fan runs and the four-way valve is electrified and the indoor fan starts, the electric heating starts if satisfying the below conditions:

A、TE < 48℃；

B、TA < 22℃；

C、TS – TA ≥ 3℃；

D、The compressor runs continuously for 4 minutes with the heating mode;

②The auxiliary electric heating quit operation if satisfying one of the below conditions：

A、TA > 22℃；

B、TS – TA < 2℃；

C、TE > 52℃；

③If anyone of the compressor, four-way valve and indoor fan doesn’t work or fault feedback from the indoor fan, the auxiliary electric heating quit operation；

④The auxiliary electric heating may be allowed to restart after 1 minutes rest if the auxiliary electric heating quit during the operation process of the compressor.

⑼ Sleeping control function

The sleeping function is valid during the automatic, cooling, dehumidifying and heating process. The indoor fan runs at low fan speed during sleeping mode, and the sleeping indication light on;

After turning into the sleeping process by pressing down the button of “sleeping” on the remote controller, to the Cooling process, the setting temperature rises by 1℃ automatically one hour later; to the Heating process, the setting temperature falls by 2℃ automatically one hour later. After another 1 hour, the setting temperature of the Cooling process raises another 1℃, and the one of the Heating process falls another 2℃. The sleeping process lasts 7 hours until air-conditioner turns off.

During the sleeping process, the mode switching operation is allowed and workable, but it will

delete the sleeping function. The air-conditioner will run at the temperature of “new setting temperature + temperature correction” if press the button of add temp.“+”.Under the sleeping status, if press down the button of “sleeping” or change modes or on-off, the sleeping process will be deleted and ended.

The sleeping process under cooling mode:

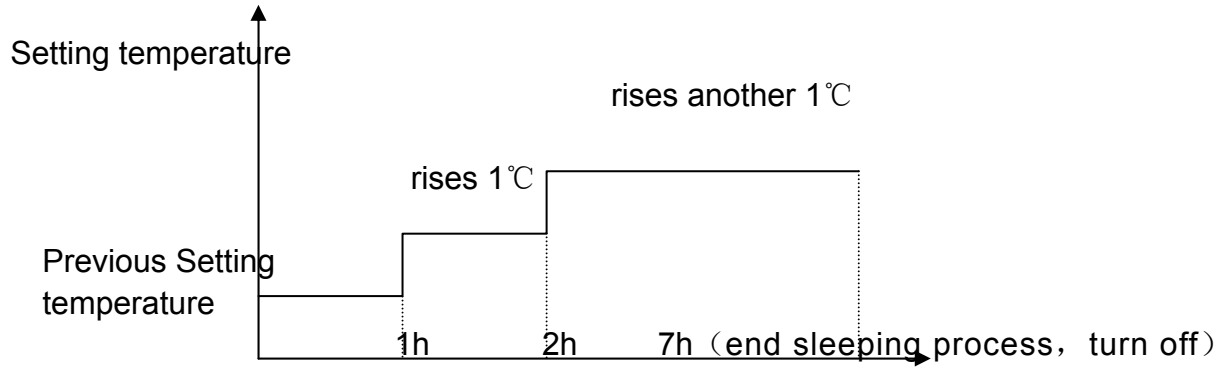

The sleeping process under heating mode:

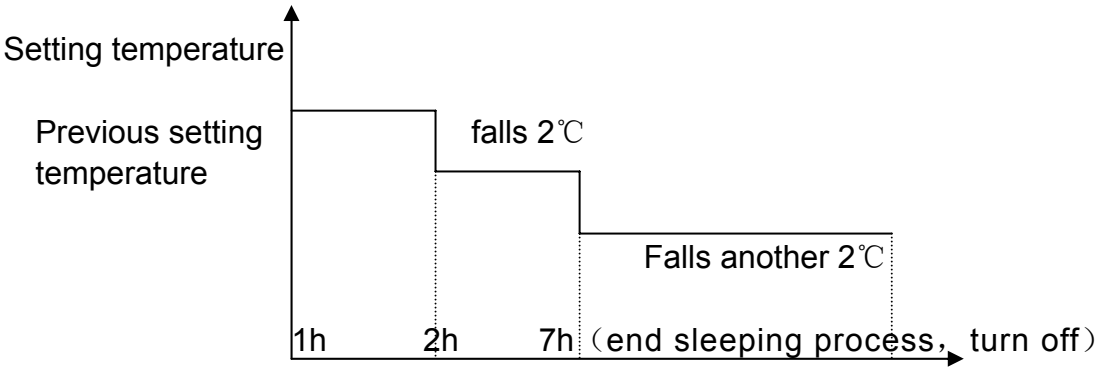

⑽Timing control function

The time range of the Timing control set is 24 hours, and the time unit is minute, single timing mode. The conversion of the modes doesn’t cancel the timing function, and the timing indication light turns on after timing setting.

①Timing turns off

The timing turns off function can be set only under the running status of the air-conditioner. The timing range is 1min.-24hour. The air-conditioner stops automatically once the setting timing reached.

②Timing turns on

The timing turns on function can be set only under the running status of the air-conditioner. The timing range is 1min.-24hour. The air-conditioner turns on automatically once the setting timing reached. The turning on and turning off action happen after setting timing set will

cancel the previous set setting timing and sleeping functions

⑾ Self-detecting function

Press the Emergency button and electrify the air-conditioner, the self-detecting process starts after the buzzer delivers short tone twice:

Start the electric heating, run the indoor fan at a high fan speed, open the air door to be the maximum →the digital display and three indicating light on in 1 second→ digital displays “11”、“22”、“33”、“44” in turn and 1second for each of them →Working light on 1 second →Timing light on 1 second →Sleeping light on 1 second →Each phase of the stepping motor moves in 1 second →the indoor fan runs for 1 second at low fan speed and middle fan speed separately→the compressor moves for 1 second →The four-way valve moves for 1 second →Outdoor fan moves for 1 second →Negative ion generator moves for 1 second →buzzer deliver one short tone→Electric heating runs 30 Seconds and stops, then the air conditioner turn into the waiting status, the self-testing is ended.

⑿Fault indication

When there is faults happen to the air-conditioner, the timing lights on the display panel will indicate the corresponding fault codes, which are specifically reflected as the following:

For LED display:

FAULT	DISPLAY MODE	DISPLAY PRIORITY	APPEARANCE
TA abnormity	Timer lamp flash **1** times/8 seconds	2	AC stopped
TE abnormity	Timer lamp flash **2** times/8 seconds	3	AC stopped
TW abnormity	Timer lamp flash **8** times/8 seconds	4	AC hasn’t stopped

For Digital display:

FAULT	DISPLAY MODE	DISPLAY PRIORITY	APPEARANCE
TA abnormity	display“E1”	2	AC stopped
TE abnormity	display “E3”	3	AC stopped
TW abnormity	display “E2”	4	AC hasn’t stopped

⒀The definition of the swing angle

(Picture 3)It shows the swing angles of the types 18000BTU and 24000BTU stepping motor，the air door’s swing angle of 18000BTU,24000BTU and 7000BTU,12000BTU are same，but the swing directions of the motors are not same.

①Once being electrified, the air door effect a motion of totally closed, and the swinging speed is 1 step/4ms；

②After the air-conditioner turns on, the air door effect a motion of total opening, and swing to

the corresponding primary position. The primary position for Heating mode is the position 5(Picture 3), for Cooling mode is the position 2 (Picture 3).
③The “Swing” button on the remote controller can set the Horizontal air-blade to be swing Automatically or not；
④The maximum swing angle of automatic swing under Heating mode is 40°，e.g. the angle between 3-5 in picture 3；the angle under Cooling mode is 40°e.g. the angle between 2-4；The swinging speed is 1step/16ms;
⑤When the indoor fan stops operation, if the setting swinging mode set by the remote control is automatic swinging, the Horizontal air-blade will turn to the corresponding position and to be orientated. For example: the corresponding position under Cooling mode is position 2(Picture 3), for Heating mode is position 5(Picture 3), resume the automatic Swing once the fan motor starts; if the setting swing mode is Manual, the swing angle of the Horizontal air-blade will never change；
⑥After turning off the air-conditioner and stopping the running of the indoor fan, the air door will shut off automatically;
⑦Enter into the Auto-run mode by pressing the Emergency switch, the setting status of the air door is in accordance with the Cooling mode, and will be adjusted again after the new mode is selected.

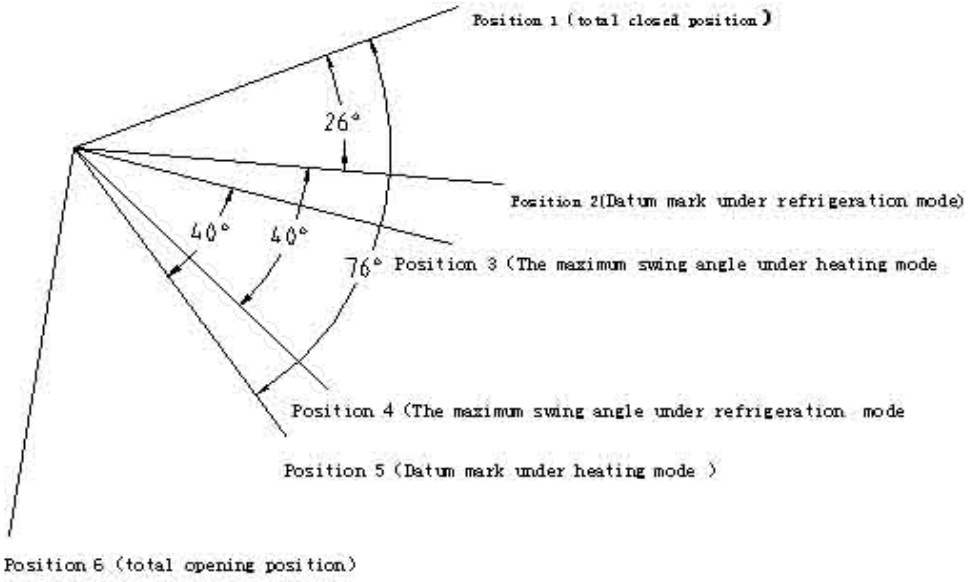

(Picture3)

⑭ Wind speed option function

18000BTU-24000BTU are RP plastic-sealed motor， the rotate speed can not be controlled by the PCB.

⑮Optional functions

The below functions’ programs are already write into the Main chip of the PCB, and can be performed if only the corresponding hardware is available. For example: the E^2 CMOS chip is in need for the Auto-restart function, the corresponding remote control is in need for the I feel function, and the relay is in need for the Negative ion function.
①Auto-restart control function

a)The setting method for Auto-restart function: After the controller being electrified, press the sleeping button on the remote control for 10 times within 5seconds towards to the controller, later, if the Auto-restart function is successfully set, there are four sounds delivered from the buzzer; If the Auto-restart function need to be cancelled, press the sleeping button of the remote control for 10 times within 5seconds towards to the controller, later, if the Auto-restart function is successfully cancelled, there are two sounds delivered from the buzzer otherwise there is no sound；

b) The contents memorized by the Auto-restart function are: operation modes, setting wind speed, setting temperature, negative ion function, swing status and on-off condition.

c) After the setting of non-electricity memory function succeeds, when the non-electricity event happens after turning off the air-conditioner normally, if re-electrify and turn on the air-conditioner, there is no 3 minutes protection delay occurred to the compressor; when the non-electricity event happens accidentally under the power-on status, if re-electrify and turn on the air-conditioner, there is 3 minutes protection delay occurred to the compressor;

d) If the setting of sleeping and timing functions occurs before the non-electricity event after air-conditioner owns the Auto-restart function, the default condition of the controller is power-off status after being electrified again.

②I feel function

a)The setting method for I feel function: Press the “I feel” function button on the remote controller, the controller will effect the I feel function once receiving the signal, and the controller herein will default the temperature value of the sensor on the remote control as the previous TA of the controller（Except the defrosting case）;

b) The quitting method for the I feel function：

- ●Press the I feel function button, the former I feel function setting will be cancelled at once;
- ●Position the remote controller towards to the receiving window of the controller, the remote control may deliver the signal to the controller every 3minutes. If the controller fails to receive the signal from the remote control, the I feel function will be automatically cancelled, and the TA control the temperature according to the temperature value detected by the TA sensor of the PCB.

c) When the I feel function starts, the controller doesn’t test the former TA sensor on the PCB.

③Negative ion function

When the indoor fan is working, press the negative ion function button on the remote control, and the negative ion relay in the controller turns on for starting the output of the negative ions; When the negative ion function is on, press the negative ion function button on the remote control, and the negative ion relay in the controller turns off for stopping the output of the negative ion;

Troubleshooting Guide

(1)Basic faults diagnose process of 9000BTU~12000BTU

1. The Foremost Inspecting Items

⑴The input voltage must be within +10% tolerance of the rated Voltage. If it is not the case, the air-conditioner will probably not work normally.

⑵Check the connecting cord between indoor unit and outdoor unit to see if it is properly connected. The connecting must be done according to the wiring diagram, please also notice that even different models may have the connecting cord of the same specification.

Please check if the marks at the connecting terminal and the marks on the cord can match, otherwise, the air-conditioner will not work normally.

⑶If the following phenomena are found, the problem is not from the air-conditioner itself.

NO.	Problems	Causes
1	The motor is heard operating but the air-conditioner dose not work when the indoor unit is powered on	Since the air-conditioner is powered on, it will come to working condition as long as you press the ON/OFF button of the remote control and the Signal is well received.
2	The compressor stops running but the indoor fan motor keeps working when it is at cooling mode with the indoor temperature higher than set temperature.	If you turn off the air-conditioner and restart it immediately, it will return to normal in 3 minutes, after that, the air-conditioner will automatically adjust the indoor fan speed to what you set.
3	The compressor works discontinuously at dehumidifying mode.	The air-conditioner will automatically control the working of the compressor according to the inside temperature
4	The air-conditioner does not work while the LED display is on.	The TIMER is set with the air-conditioner; it will be in hold on condition. If the TIMER setting is cancelled, the air-conditioner will return to normal working condition
5	The compressor works discontinuously at cooling and dehumidifying mode, and the indoor fan motor slows down.	The compressor stops internally or the fan motor slows down to prevent the indoor heat exchanger from being frozen.

2. No Power Display

⑴Items

a) Check if the input voltage is correct?

b) Check if the AC power supply connecting is correct?

c) Check if the output voltage of the manostat L7805 (IC2) is correct?

⑵Trouble shooting procedure

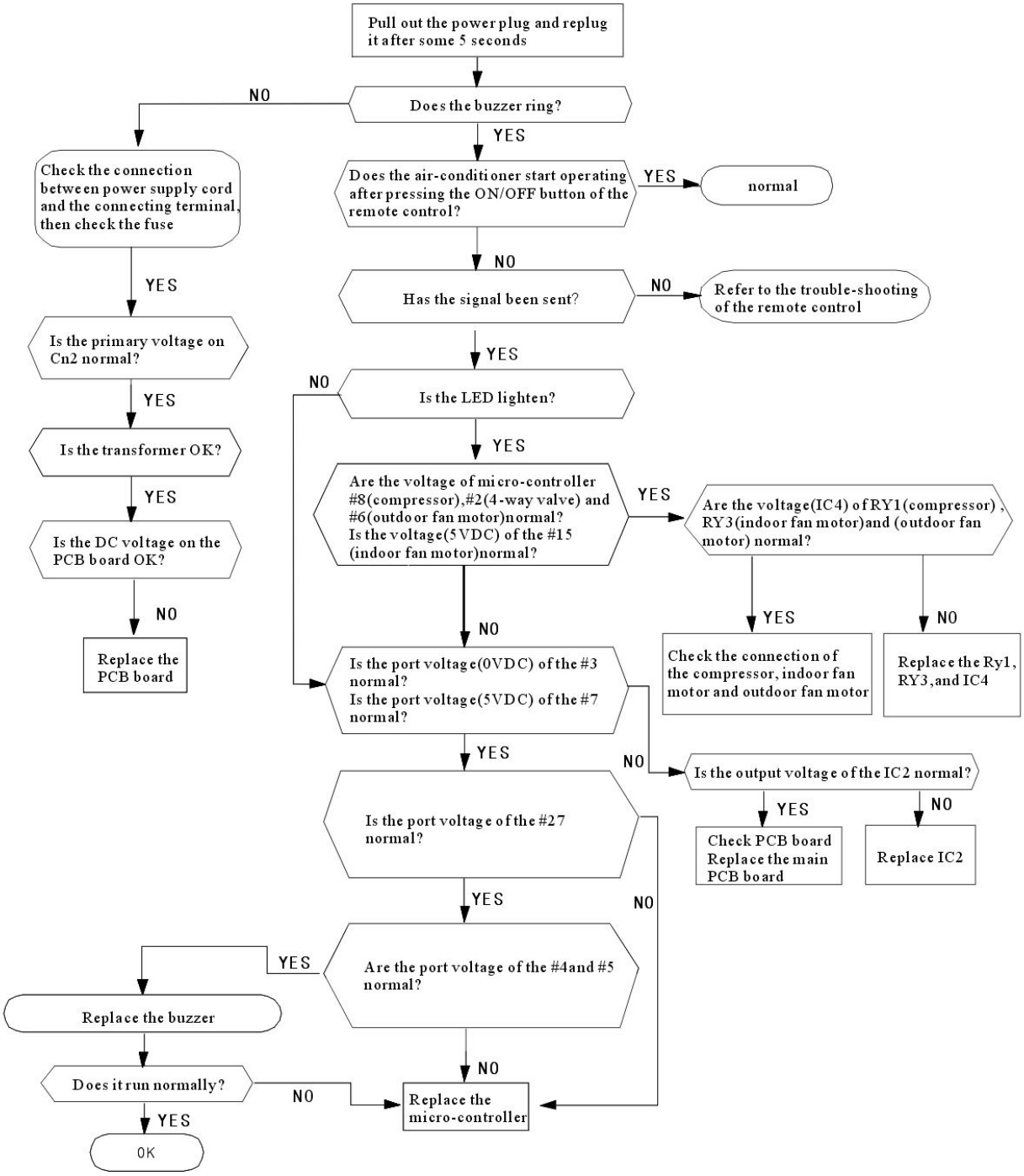

3. The Indoor Fan Motor Does Not Work

(1)Items

a) Check if the indoor fan motor is connected correctly to the connector (CN8)?

b) Check if the AC input voltage is correct?

c) Check if the IC of indoor fan motor is connected correctly to the connector (CN2)?

d) Check if the capacity of indoor fan motor is connected correctly to the connector (CN8)?

(2)Trouble shooting procedure

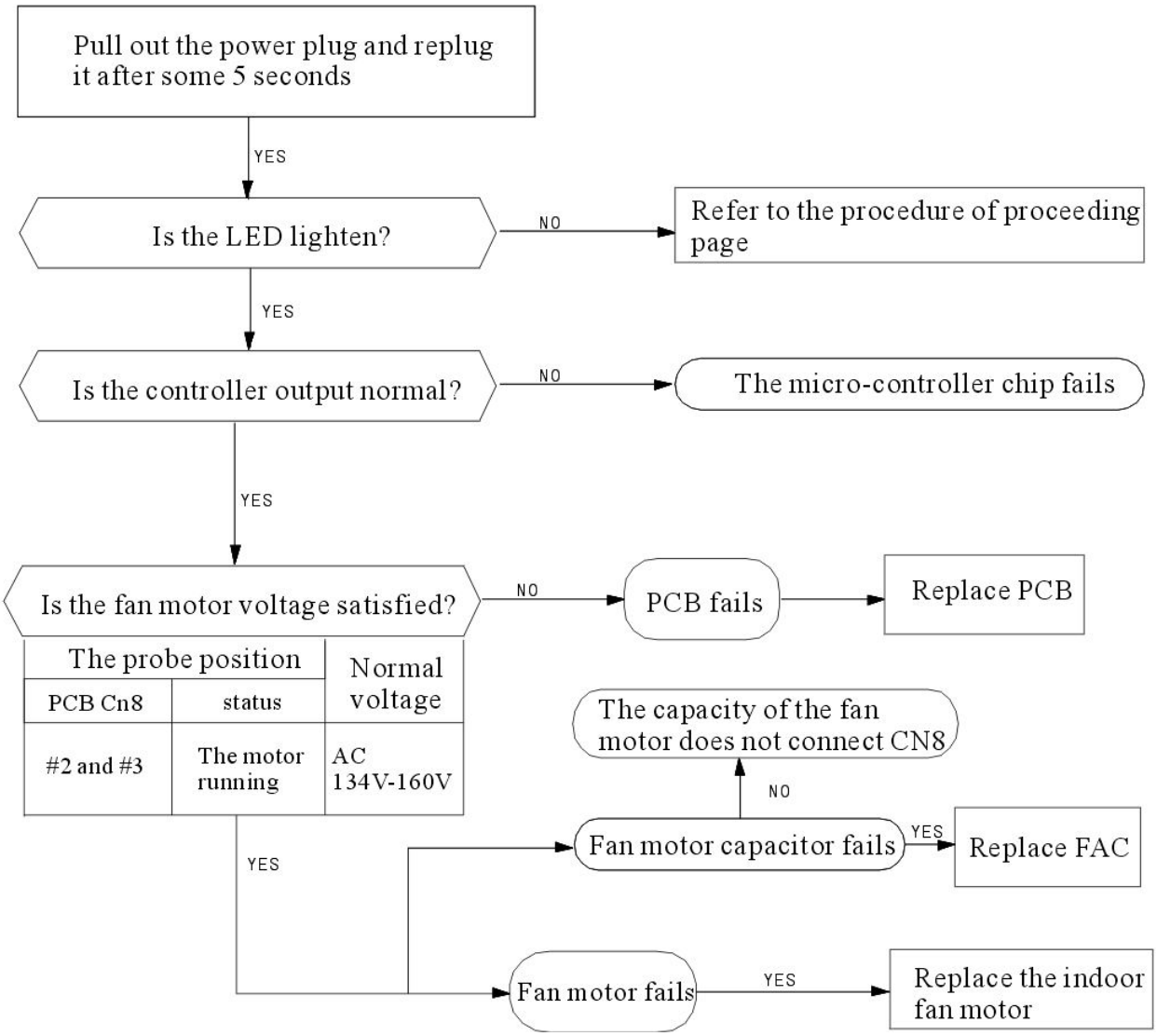

4. The Outdoor Unit Does Not Work

(1)Items

a) Check if the input voltage is correct?

b) Check if the wire connection of the outdoor connecting terminal is correct?

(2)Trouble shooting procedure

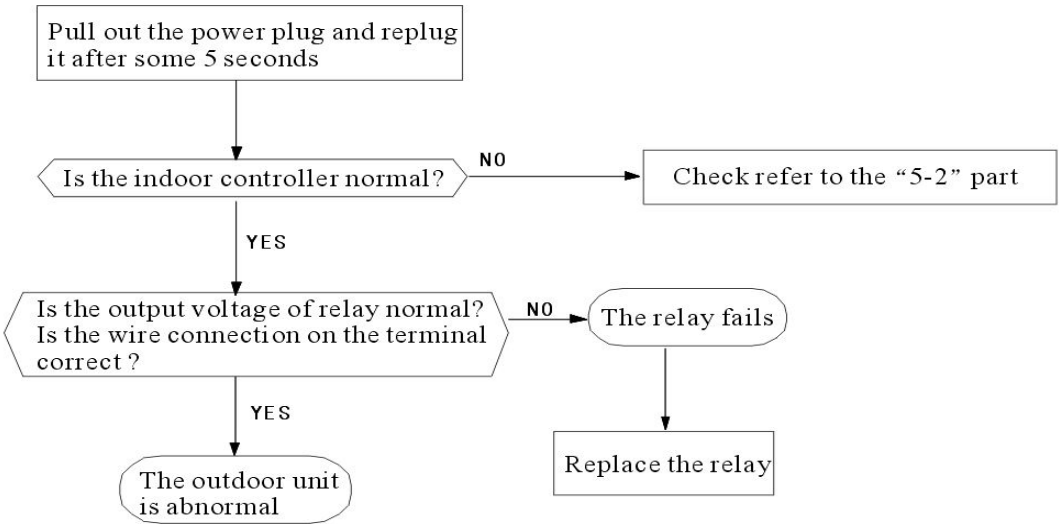

5. The Step Motor Does Not Work

(1)Items

a) Check if the input voltage is correct?

b) Check if the step motor controlling the up-down movement firmly connected to Cn2?

(2)Trouble shooting procedure

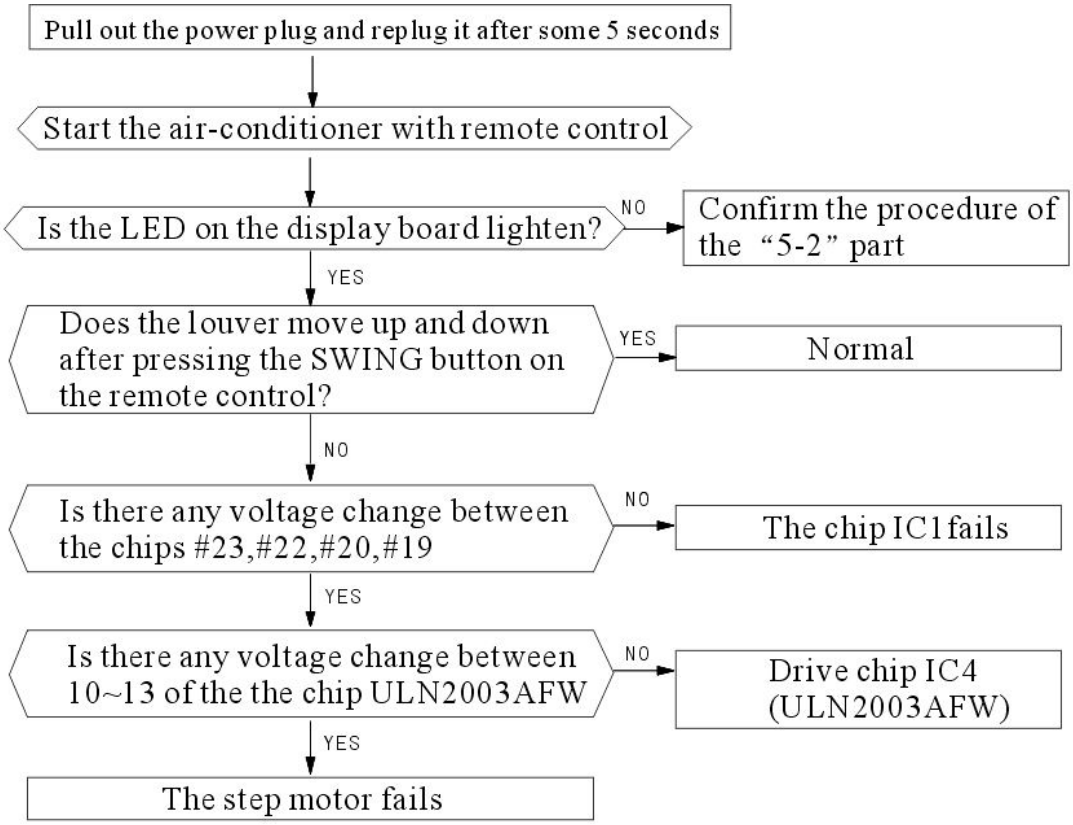

6. Heating Mode Can Work, But No Hot Air Blow

(1)Check if the set temperature is lower than the indoor temperature?

(2)Check if the indoor PCB is connected to the terminal correctly?

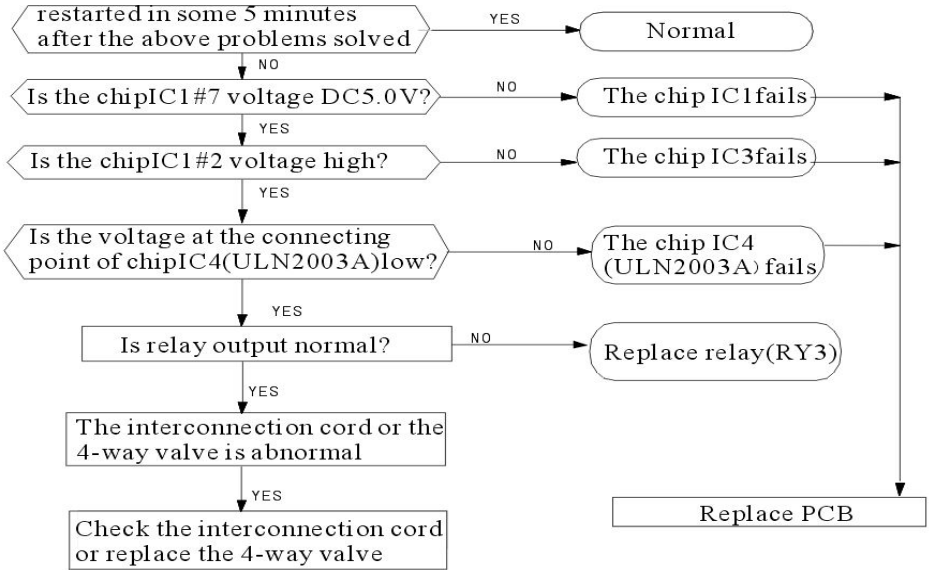

7. Remote Control Can Not Work

Trouble shooting procedure

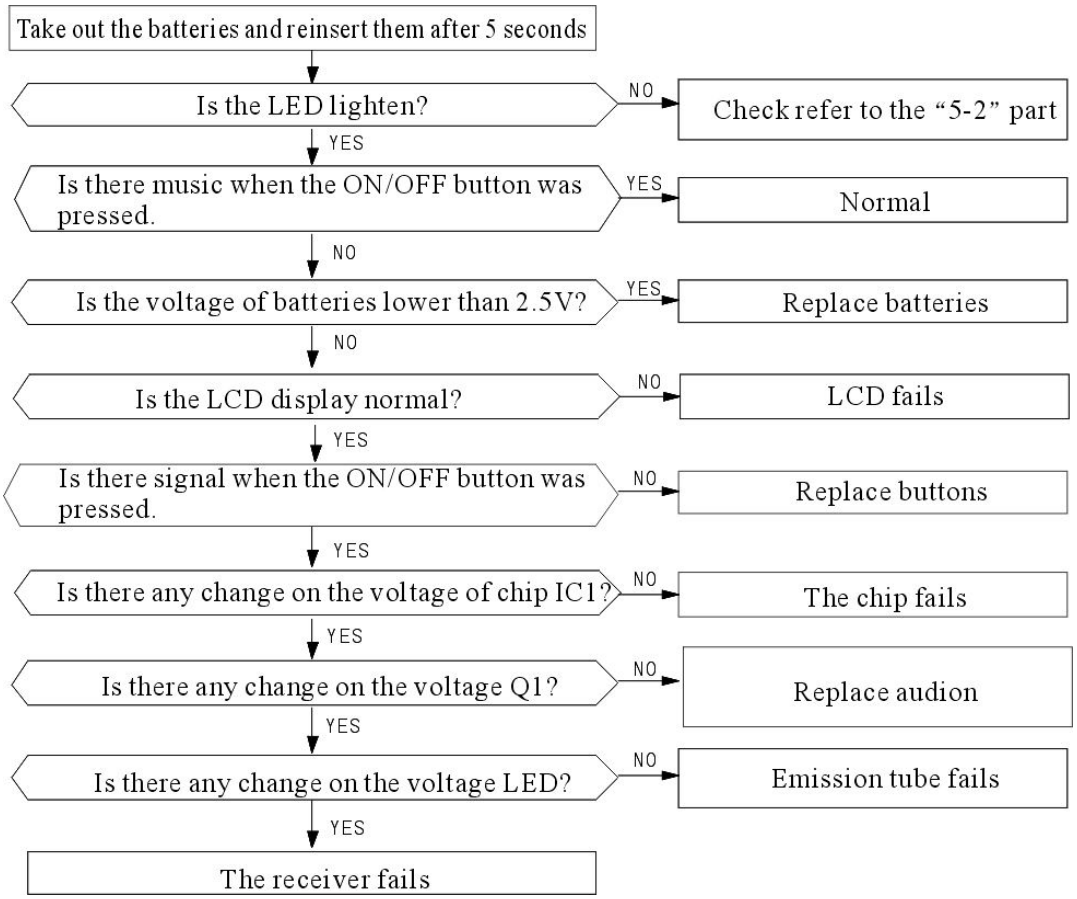

8. The Failure Analysis of the Main Parts

<table>
<tr><th>Part</th><th colspan="2">Analysis</th></tr>
<tr><td rowspan="3">Heat exchanger</td><td colspan="2">Measure resistance</td></tr>
<tr><td>Normal</td><td>
<table>
<tr><td>Environment temperature</td><td>15℃</td><td>20℃</td><td>25℃</td><td>30℃</td><td>35℃</td><td>40℃</td></tr>
<tr><td>Resistance of transformer(KΩ)</td><td>7.45</td><td>6.08</td><td>5</td><td>4.13</td><td>3.43</td><td>2.86</td></tr>
</table>
</td></tr>
<tr><td>Abnormal</td><td>∞：Turn-off；0Ω：Short-cut</td></tr>
<tr><td rowspan="5">The indoor fan motor</td><td colspan="2">Detecting the resistance between each connecting terminal</td></tr>
<tr><td>Normal</td><td>Environment temperature（10℃～30℃）
<table>
<tr><td colspan="2">Between</td><td>1</td><td>2</td><td>3</td></tr>
<tr><td>Blue、yellow</td><td>Main</td><td>410Ω ±10%</td><td>350Ω ±10%</td><td>370Ω ±10%</td></tr>
<tr><td>Blue、red</td><td>Auxillary</td><td>325Ω ±10%</td><td>270Ω ±10%</td><td>300Ω ±10%</td></tr>
<tr><td colspan="2">Input</td><td colspan="3">YYK13-4：13W YYK19-4：19W</td></tr>
</table>
</td></tr>
<tr><td>Abnormal</td><td>∞：Turn-off；0Ω：Short-cut</td></tr>
<tr><td colspan="2">Detecting the voltage between the signal wire of fan motor and ground</td></tr>
<tr><td>Normal</td><td>
<table>
<tr><td>Between</td><td>Voltage</td></tr>
<tr><td>Gray、Orange</td><td>0.5V～4.5V</td></tr>
<tr><td>Yellow、Orange</td><td>5V</td></tr>
</table>
</td></tr>
<tr><td>Abnormal</td><td>voltage<0, voltage>5 is abnormal</td></tr>
<tr><td rowspan="3">Step motor</td><td>Normal</td><td>Environment temperature（10℃～30℃）
<table>
<tr><td colspan="2" rowspan="2">Between</td><td>1</td><td>2</td><td>–</td></tr>
<tr><td>24BYJ48</td><td>35BYJ412B</td><td>–</td></tr>
<tr><td>Blue、yellow</td><td>–</td><td>Above 300Ω</td><td>Around 120Ω</td><td>–</td></tr>
<tr><td>–</td><td>–</td><td>–</td><td>–</td><td>–</td></tr>
<tr><td colspan="2">Input</td><td>1.5W</td><td>–</td><td>–</td></tr>
</table>
</td></tr>
<tr><td>Abnormal</td><td>∞：Turn-off；0Ω：Short-cut</td></tr>
<tr><td rowspan="3">The outdoor fan motor</td><td colspan="2">Detecting the resistance between the red wire and every connecting end</td></tr>
<tr><td>Normal</td><td>When the temperature is20℃～30℃ ,around 300Ω and 120Ω</td></tr>
<tr><td>Abnormal</td><td>∞：Turn-off；0Ω：Short-cut</td></tr>
</table>

(2)Basic faults diagnose process of 18000BTU~24000BTU

1. The Foremost Inspecting Items

⑴The input voltage must be within +10% tolerance of the rated Voltage. If it is not the case, the air-conditioner will probably not work normally.

⑵Check the connecting cord between indoor unit and outdoor unit to see if it is properly connected. The connecting must be done according to the wiring diagram, please also notice that even different models may have the connecting cord of the same specification.

Please check if the marks at the connecting terminal and the marks on the cord can match, otherwise, the air-conditioner will not work normally.

⑶If the following phenomena are found, the problem is not from the air-conditioner itself.

NO.	Problems	Causes
1	The motor is heard operating but the air-conditioner dose not work when the indoor unit is powered on	Since the air-conditioner is powered on, it will come to working condition as long as you press the ON/OFF button of the remote control and the signal is well received.
2	The compressor stops running but the indoor fan motor keeps working when it is at cooling mode with the indoor temperature higher than set temperature.	If you turn off the air-conditioner and restart it immediately, it will return to normal in 3 minutes, after that, the air-conditioner will automatically adjust the indoor fan speed to what you set.
3	The compressor works discontinuously at dehumidifying mode.	The air-conditioner will automatically control the working of the compressor according to the inside temperature
4	The air-conditioner does not work while the LED display is on.	The TIMER is set with the air-conditioner; it will be in hold on condition. If the TIMER setting is cancelled, the air-conditioner will return to normal working condition.
5	The compressor works discontinuously at cooling and dehumidifying mode, and the indoor fan motor slows down.	The compressor stops internally or the fan motor slows down to prevent the indoor heat exchanger from being frozen.

2. No Power Display

⑴Items

①Check if the input voltage is correct?

②Check if the AC power supply connecting is correct?

③Check if the output voltage of the manostat L7805 (IC2)is correct?

⑵Trouble shooting procedure

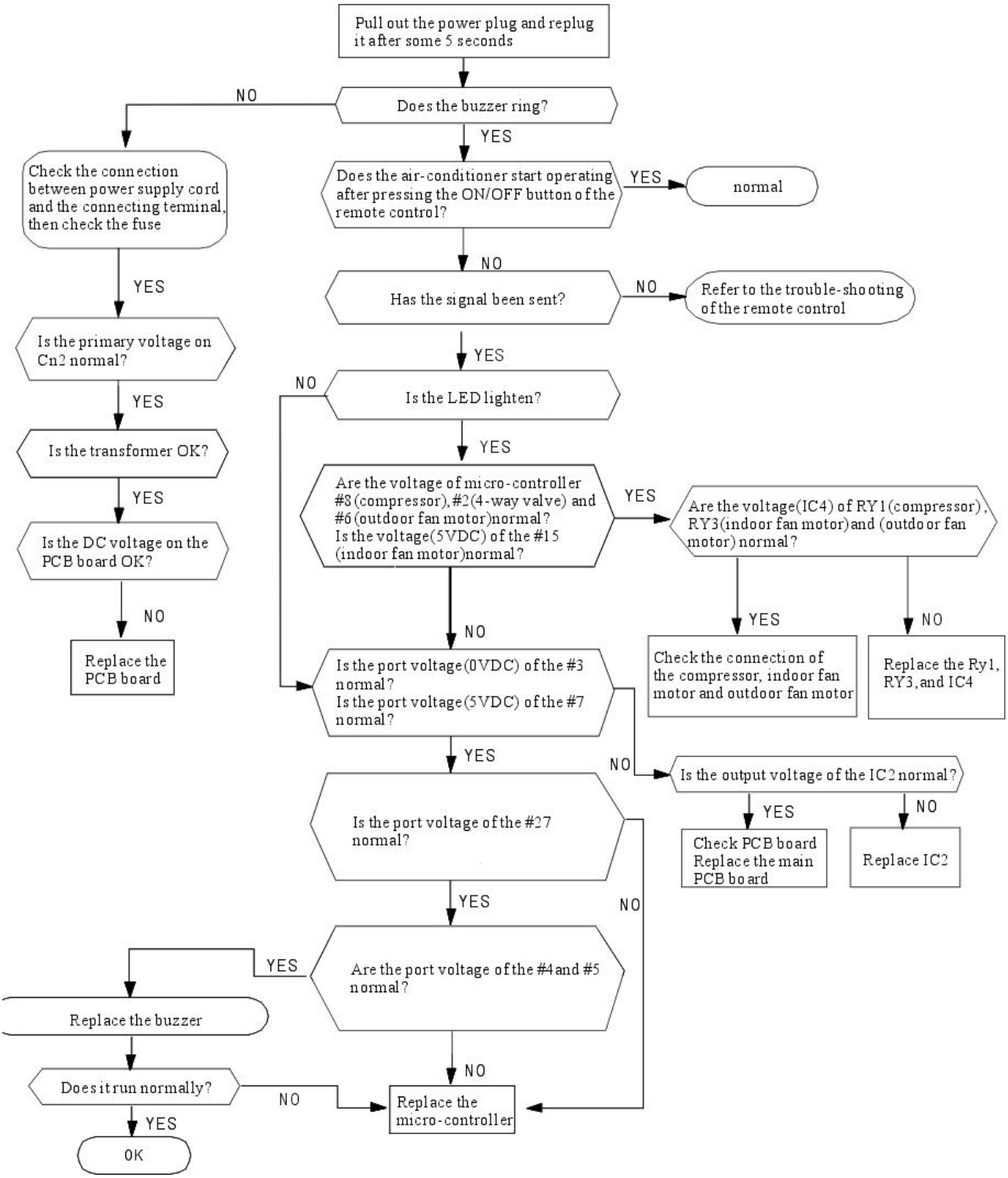

3. The Indoor Fan Motor Does Not Work

(1)Items

①Check if the indoor fan motor is connected correctly to the connector(CN8)?

②Check if the AC input voltage is correct?

③Check if the IC of indoor fan motor is connected correctly to the connector(CN2)?

④Check if the capacity of indoor fan motor is connected correctly to the connector(CN8)?

(2)Trouble shooting procedure

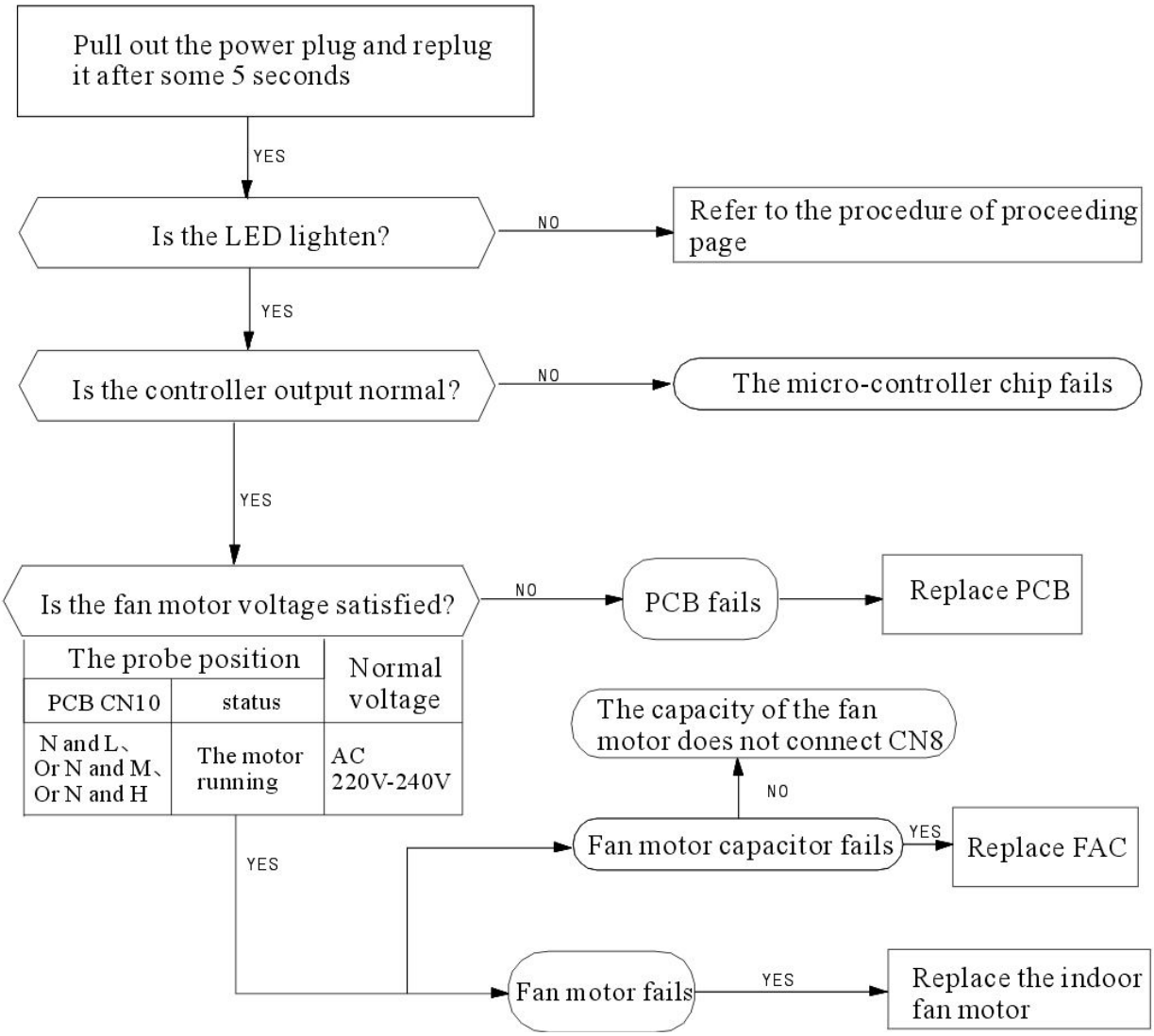

4. The Outdoor Unit Does Not Work

(1)Items

①Check if the input voltage is correct?

②Check if the wire connection of the outdoor connecting terminal is correct?

(2)Trouble shooting procedure

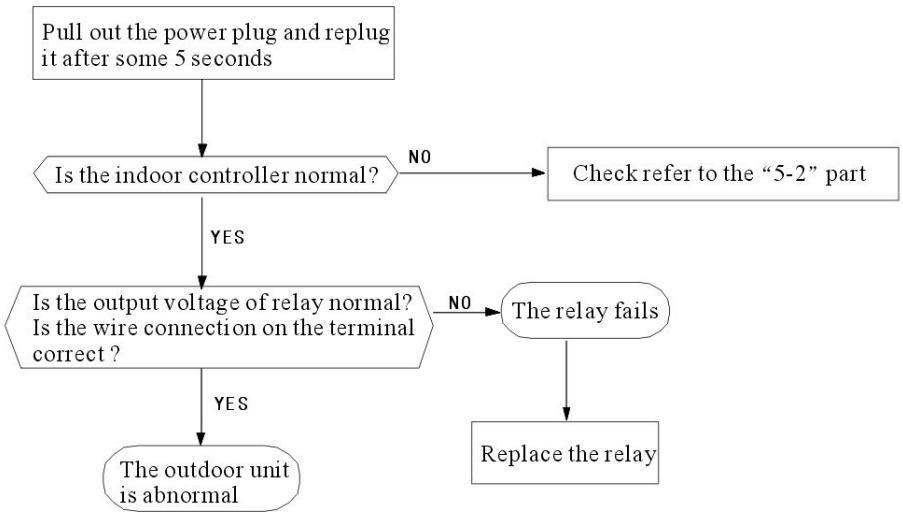

5. The Step Motor Does Not Work

⑴Items

①Check if the input voltage is correct?

②Check if the step motor controlling the up-down movement firmly connected to Cn2?

⑵Trouble shooting procedure

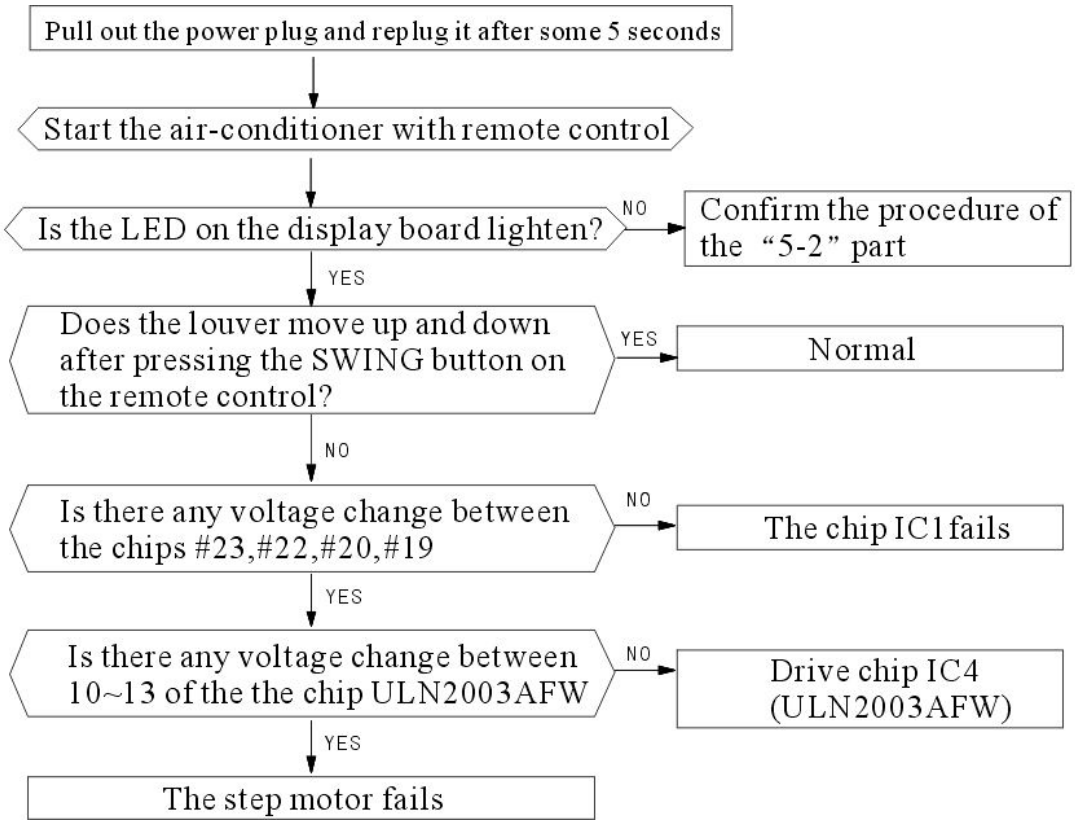

6. Heating Mode Can Work, But No Hot Air Blow

⑴Check if the set temperature is lower than the indoor temperature?

⑵Check if the indoor PCB is connected to the terminal correctly?

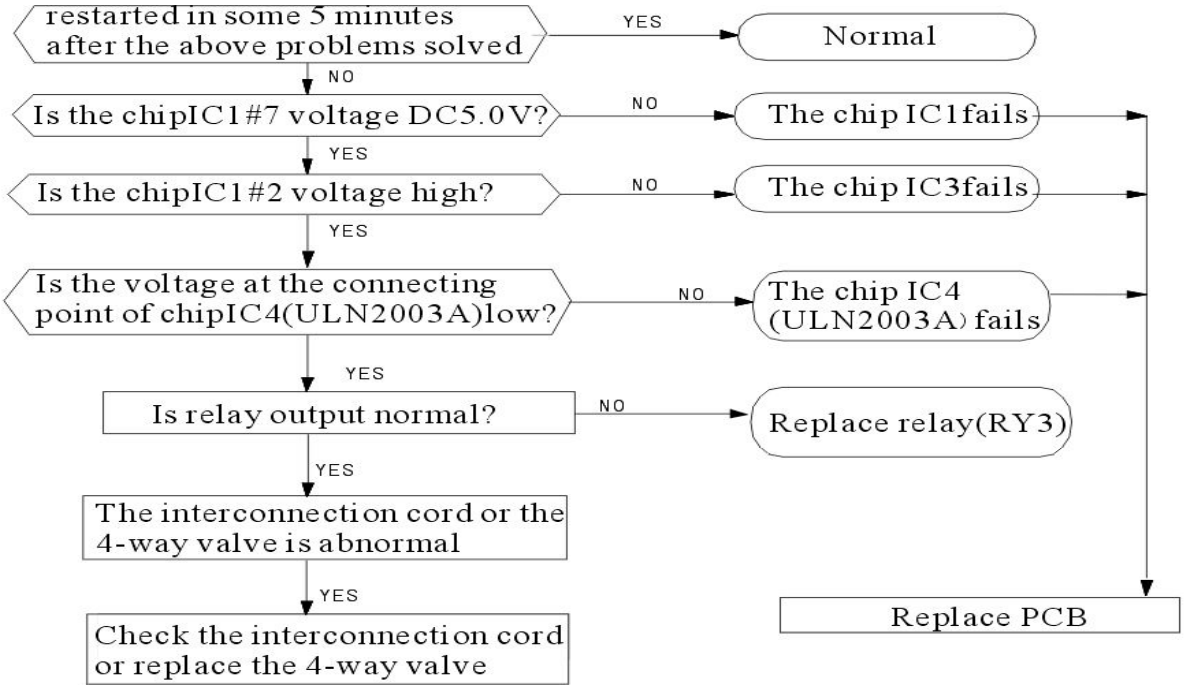

7. Remote Control Can Not Work

Trouble shooting procedure

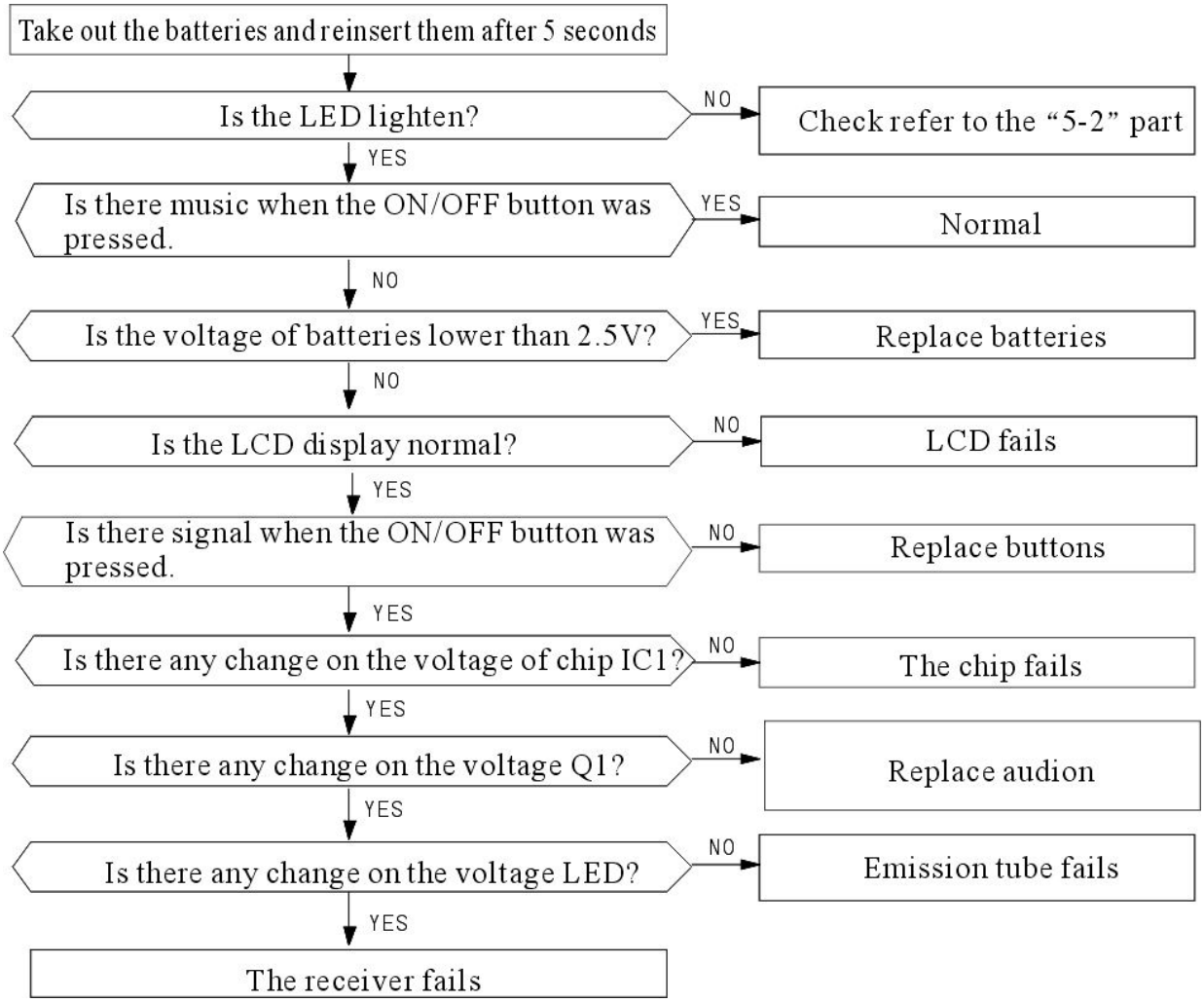

8. The Failure Analysis of the Main Parts

Part	Analysis	
Transformer Heat exchanger	Measure resistance	
	Normal	Environment temperature: 15℃ / 20℃ / 25℃ / 30℃ / 35℃ / 40℃ Resistance of transformer(KΩ): 7.45 / 6.08 / 5 / 4.13 / 3.43 / 2.86
	Abnormal	∞: Turn-off ; 0Ω: Short-cut
Step motor	Normal	Environment temperature (10℃～30℃)

Between		1	2	–
		24BYJ48	35BYJ412B	–
Blue、yellow	–	Above300Ω	Around120Ω	–
–	–	–	–	–
Input		1.5W	–	–

Part	Analysis	
Step motor	Abnormal	∞: Turn-off ; 0Ω: Short-cut
The outdoor fan motor	Detecting the resistance between the red wire and every connecting end	
	Normal	When the temperature is20℃～30℃ ,around 300Ω and 120Ω
	Abnormal	∞: Turn-off ; 0Ω: Short-cut

(3)Troubleshooting Guide Specially

1.H series & E series (For LED display：Timer indicator (Yellow lamp) flashes)：

Trouble source	Displayed phenomenon	Display priority class
PG motor of indoor unit feedback abnormity	Sparkle **4** times per **8** seconds	1
Temperature sensor of air intake abnormity	Sparkle **1** time per **8** seconds	2
Temperature sensor of indoor unit coil abnormity	Sparkle **2** times per **8** seconds	3
Temperature sensor of outdoor unit coil abnormity	Sparkle **1** time per **1** second	4

2.H series & E series (For Digital display)：

Trouble source	Displayed phenomenon	Display priority class
PG motor of indoor unit feedback abnormity	**E4**	1
Temperature sensor of air intake abnormity	**E1**	2
Temperature sensor of indoor unit coil abnormity	**E3**	3
Temperature sensor of outdoor unit coil abnormity	**E2**	4
Communication abnormity between outdoor unit and indoor unit	**E5**	5

Note: 1. “Sparkle 1 time per 8 seconds” indicated on LED display model is the same as “E1” displayed on Digital display model.

2. “Sparkle 1 time per 1 seconds” indicated on LED display model is the same as “E2” displayed on Digital display model.

3. “Sparkle 2 times per 8 seconds” indicated on LED display model is the same as “E3” displayed on Digital display model.

4.“Sparkle 4 times per 8 seconds” indicated on LED display model is the same as “E4” displayed on Digital display model.

Explanations as follows:

1. E1 and E3 is the problem of temperature sensor in indoor unit. Two temperature sensors are in indoor unit. One is made of plastic material and another one is made of copper material. If the plastic sensor is damaged, for example, its resistance value deviates from its original value greatly, E1 malfunction indication will spear. Or, this sensor’s signal cable is broken and no signal will be received from this sensor, E1 will appear as well. So, when E1 appear, maintenance man should test its resistance value and its cable connection with PCB.
2. As said above, there is a copper sensor which used to detect the outlet temperature of evaporator. If the sensor’s cable broken or sensor’s resistance deviating from its original correct value, E3 will appear. Check its value and its cable connection with PCB.

3. The standard resistance value for the two above sensors is 5kΩ at 25℃. The two different sensors have the same standard values. If the tested value is abnormal, what you need to do is to replace it with a new one.

4. As for the E2 problem, if the signal cable between indoor unit and outdoor unit has not been connected, for example, the cable is broken or has not been connected with the outdoor socket, the E2 will appear. Generally, it can be caused by the unqualified installers. In domestic market, many customers told us about this problem. After checking, we found the cable from indoor unit was forgotten to be connected with the outdoor socket. If the outdoor copper sensor itself is defaulted, the E2 will appear as well, for example, the sensor is broken, the resistance is infinite. At this condition, you should check the cable, the socket, the sensor to find where the problem is. Generally, this problem is easy to be repaired.

5. Generally, when E4 problem happen, it mustn't be the problem of PG motor. Firstly, maybe the electrical connection are not very well, so please turn off the power supply and check the wire connection of the indoor motor then restart the appliance once again to see whether there is also E4 display on the panel. If the answer is Yes, please try to replace another PCB, because there are some electronic components are damaged and cut off *the feedback circuit of the motor*, E4 will appear as well. So, you should check whether there is something wrong with PCB. If the PCB is good, you should check the PG motor of indoor unit.

6. E5 will appear when communication failed between indoor and outdoor unit for dual type air conditioners (Multi-split Type).

REMARKS:

Testing method of Temperature sensor resistance

Cut off the Power supply, use Multimeter to measure the resistance of the sensor.

1. For two indoor unit sensors: Dismantle the electric control box, pull the sensor socket out of the the PCB. There are two sensors sockets, one is for Room temperature (colored Yellow), the other is for Pipe temperature (colored RED).

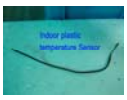

2. Use the Multimeter to measure the resistance of the related sensor, the two fingers of the Multimeter (Red and Black) should touch completely to the small metal plate of the sensor socket.

3. The outdoor sensors can also be measured to the way mentioned above.

4. All these three sensors have the same Standard resistance value, generally 5kΩ at 25℃,please notice that the value will change according to the environmental temperature, actually there exits a reverse-ratio relation. You can refer to the attached Table for Standard resistance value of the sensor.

Standard resistance value of the sensors

502AT-3470[unit：temperature（℃）、resistance（kΩ）]

Temperature	Lower limit	Standard value	Upper limit	Temperature	Lower limit	Standard value	Upper limit
-30.0	62.017	64.152	66.288	*11.0*	8.667	8.8008	8.932
-29.0	58.674	60.662	62.650	*12.0*	8.313	8.4385	8.560
-28.0	55.536	57.387	59.238	*13.0*	7.975	8.0934	8.207
-27.0	52.589	54.314	56.038	*14.0*	7.653	7.7643	7.870
-26.0	49.821	51.428	53.035	*15.0*	7.347	7.4506	7.549
-25.0	47.219	48.717	50.214	*16.0*	7.054	7.1513	7.243
-24.0	44.772	46.168	47.565	*17.0*	6.776	6.8658	6.952
-23.0	42.470	43.772	45.075	*18.0*	6.510	6.5934	6.674
-22.0	40.303	41.518	42.733	*19.0*	6.256	6.3333	6.409
-21.0	38.263	39.397	40.531	*20.0*	6.013	6.0850	6.157
-20.0	36.341	37.399	38.458	*21.0*	5.781	5.847	5.914
-19.0	34.529	35.517	36.506	*22.0*	5.559	5.6213	5.683
-18.0	32.821	33.744	34.667	*23.0*	5.347	5.4048	5.462
-17.0	31.210	32.072	32.934	*24.0*	5.144	5.1978	5.251
-16.0	29.689	30.495	31.300	*25.0*	4.950	5.0000	5.050
-15.0	28.254	29.007	29.759	*26.0*	4.760	4.8108	4.861
-14.0	26.898	27.602	28.305	*27.0*	4.579	4.6298	4.680
-13.0	25.617	26.275	26.933	*28.0*	4.406	4.4566	4.507
-12.0	24.406	25.021	25.636	*29.0*	4.240	4.2909	4.341
-11.0	23.261	23.836	24.411	*30.0*	4.082	4.1323	4.182
-10.0	22.177	22.715	23.254	*31.0*	3.930	3.9804	4.030
-9.0	21.140	21.643	22.146	*32.0*	3.784	3.8349	3.884
-8.0	20.158	20.629	21.099	*33.0*	3.645	3.6955	3.744
-7.0	19.229	19.669	20.109	*34.0*	3.512	3.5620	3.610
-6.0	18.349	18.760	19.172	*35.0*	3.384	3.4340	3.482
-5.0	17.515	17.900	18.285	*36.0*	3.262	3.3113	3.359
-4.0	16.725	17.086	17.446	*37.0*	3.145	3.1937	3.241
-3.0	15.976	16.313	16.651	*38.0*	3.033	3.0809	3.128
-2.0	15.266	15.582	15.897	*39.0*	2.925	2.9727	3.019
-1.0	14.592	14.888	15.183	*40.0*	2.822	2.8688	2.915
0.0	13.953	14.229	14.506	*41.0*	2.723	2.7692	2.815
1.0	13.341	13.600	13.858	*42.0*	2.627	2.6735	2.718
2.0	12.760	13.002	13.244	*43.0*	2.536	2.5816	2.626
3.0	12.209	12.435	12.661	*44.0*	2.448	2.4934	2.537
4.0	11.685	11.896	12.108	*45.0*	2.364	2.4087	2.452
5.0	11.187	11.385	11.583	*46.0*	2.283	2.3273	2.370
6.0	10.713	10.899	11.084	*47.0*	2.206	2.2491	2.291
7.0	10.263	10.436	10.610	*48.0*	2.132	2.1739	2.215
8.0	9.835	9.9995	10.159	*49.0*	2.060	2.1016	2.143
9.0	9.427	9.5802	9.731	*50.0*	1.991	2.0321	2.073
10.0	9.039	9.1810	9.323	*51.0*			

Temperature	Lower limit	Standard value	Upper limit	Temperature	Lower limit	Standard value	Upper limit
50.0		2.0321		*81.0*		0.7730	
51.0		1.9656		*82.0*		0.7508	
52.0		1.9016		*83.0*		0.7293	
53.0		1.8399		*84.0*		0.7086	
54.0		1.7804		*85.0*		0.6885	
55.0		1.7232		*86.0*		0.6690	
56.0		1.6680		*87.0*		0.6502	
57.0		1.6149		*88.0*		0.6320	
58.0		1.5636		*89.0*		0.6144	
59.0		1.5142		*90.0*		0.5973	
60.0		1.4666		*91.0*		0.5808	
61.0		1.4206					
62.0		1.3763					
63.0		1.3336					
64.0		1.2923					
65.0		1.2526					
66.0		1.2142					
67.0		1.1771					
68.0		1.1413					

Disassembly Of The Parts

(1)Indoor unite and outdoor unit of 9000BTU~12000BTU

Attention: Turn off the air-conditioner and pull out the plug of the power supply before the service.

1. Indoor unit:

No.	Part	Operation Process	Remark
1	Panel	1) Turn off the air-conditioner and cut off the power supply; 2) Tear the adhesive tape sticking to the panel; 3) Hold the handles at both sides of the panel and push upward to have it slip out; 4) Grasp the both sides of the panel and push upward; 5) Turn the upper board by 90°and unload it from the connecting pole carefully; 6) Take out the filter from the right and left side. 7) Screw off the bolts on the electrical box cover and unload the box cover; 8) Screw off the 5 bolts (for 1Hp AC) or 8 bolts (for 1.5Hp AC) on the medium frame; 9) Hold the both sides of the medium frame and open it gently 10)Turn up the medium frame by about 90°; 11)Offload the medium frame once hearing the crack sound;	
2	Electrical component	1) Do No.”1” and “2” firstly, offload the water drainage soft tube; 2) Offload the water draining tank from chassis and take out the electrical components.	
3	Water draining tank	1) Do No. “1” firstly; 2) Pull out all tie-in connecting with PCB and the temperature sensor, etc.; 3) Screw off the screws and bolts as indicated in the picture. Untie the outdoor unit’s interconnection cord and	

		power supply cord from the terminal of the electrical box. 4) If the main PCB board is loosed by chance, remove it away;	
4	Evaporator	1) Do No.”1” , “2” and “3” firstly; 2) Offload the connecting pipe; 3) Offload the tube clip at the rear; 4) Screw off the bolts at the right and left side; 5) Lift up the evaporator, and draw it out from the indoor unit;	
5	Indoor fan Fan motor	1) Screw off one bolt from the motor cover, and remove the motor cover; 2) Offload the motor from the fan; 3) Offload the fan from bearing;	 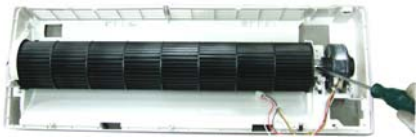

2. Outdoor unit:

No.	Part	Operation Process	Remark
1	General operation	1) Screw off one fastening bolt from the electrical box cover, and offload the box cover; 2) Pull out the interconnection cord from the electrical box; 3) Screw off the five fastening bolts from the cover board, and offload the board; Screw the six fastening bolts from the front panel, and offload the front panel; 4) Screw off the fastening bolts from the electrical assembly; 5) Screw off the eight fastening bolts and offload the outer frame;	
2	Outdoor fan motor	1) Do No. “1” firstly; 2) Screw off the fastenings screws clockwise. 3) Offload the fan. 4) Screw off the four fastening bolts and offload the fan motor; 5) Screw off the two fastening bolts and offload the fan motor bracket.	

3	Condenser	1) Do No.”1” and “2” firstly; 2) Screw off the two fastening bolts; 3) Weld off the inlet and outlet tube; 4) Offload the condenser.	
4	Compressor	1) Do No.”1” , “2”and “3” firstly; 2) Open the cover of compressor, release the connection cord. 3) Weld off the inlet and outlet tube; 4) Screw off the three screws; 5) Offload the compressor.	

(2)Indoor unite and outdoor unit of 18000BTU~24000BTU

Attention: Turn off the air-conditioner and pull out the plug of the power supply before the service.

1. Indoor unit:

No.	Part	Operation Process	**Remark**
1	Front panel	1) Turn off the air-conditioner and cut off the power supply; 2) Remove the adhesive tape sticking to the panel. 3) Hold the handles at both sides of the panel and push upward to have it slip out; 4) Grasp the both sides of the panel and push upward; 5) Turn the upper board by 90°and unload it from the connecting pole carefully; 6) Take out the filter from the right and left side. 7) Screw off the bolts on the electrical box cover and unload the box cover; 8) Screw off the six bolts on the medium frame; 9) Hold the both sides of the medium frame and open it gently; 10)Turn up the medium frame by about 90°; 11)Offload the medium frame once hearing the crack sound;	
2	Water draining tank	1) Do No.”1” and “2” firstly, offload the water draining soft tube; 2) Offload the water draining tank from the chassis and take out the electrical components.	

3	Electrical component	1) Do No. “1” firstly; 2) Pull out all tie-in connecting with PCB and the temperature sensor, etc.; 3) Screws off the screws and bolts at the three positions indicated in the picture. Untie the outdoor unit’s interconnection cord and power supply cord from the terminal of the electrical box. 4) If the main PCB board is loosed by chance, remove it away;	
4	Evaporator	1) Do No.”1” , “2” and “3” firstly; 2) Offload the connecting pipe; 3) Offload the tube clip at the rear; 4) Screw off the bolts at the right and left side; 5) Lift up the evaporator, and draw it out from the indoor unit;	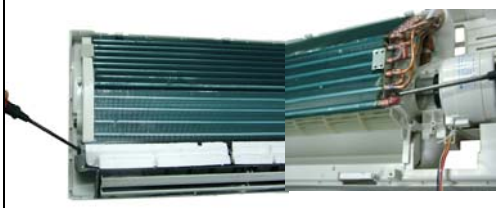
5	Indoor fan and fan motor	1) Offload the motor from the indoor fan; 2) Offload the indoor fan from bearing;	

2. Outdoor unit

No.	Part	Operation Process	Remark
1	General operation	1) Screw off one fastening bolt from the electrical box cover, and offload the box cover; 2) Pull out the connecting cord from the electrical box; 3) Screw off the five fastening bolts from the cover board, and offload the cover board; Screw the six fastening bolts from the front panel, and offload the front panel; 4) Screw off the fastening bolts from the electrical assembly panel; 5) Screw off the eight fastening bolts and offload the outer frame;	
2	Fan motor	1) Do No.”1” firstly; 2) Screw off the fastening nut(Rotate in clockwise direction); 3) Offload the outdoor fan; 4) Screw off the four fastening bolts from the electrical motor and offload the electrical motor; 5) Screw off the two fastening bolts and offload the bracket;	
3	Condenser	1) Do “1”,”2” firstly; 2) Screw off the fastening bolts at the left and right sides; 3) weld off the inlet and outlet tubes; 4) Offload the condenser;	

4	Compressor	1) Do “1” ,“2”, “3” firstly; 2) Open the cover of the compressor, and loosen the connecting cables; 3) Weld off the inlet and outlet tubes of the compressor; 4) Screw off three flat nuts; 5) Offload the compressor;	

Electronic Control Device

(1) Schematic Diagram for 7K, 9K, 12K BTU, E# series (Renesas Chip)

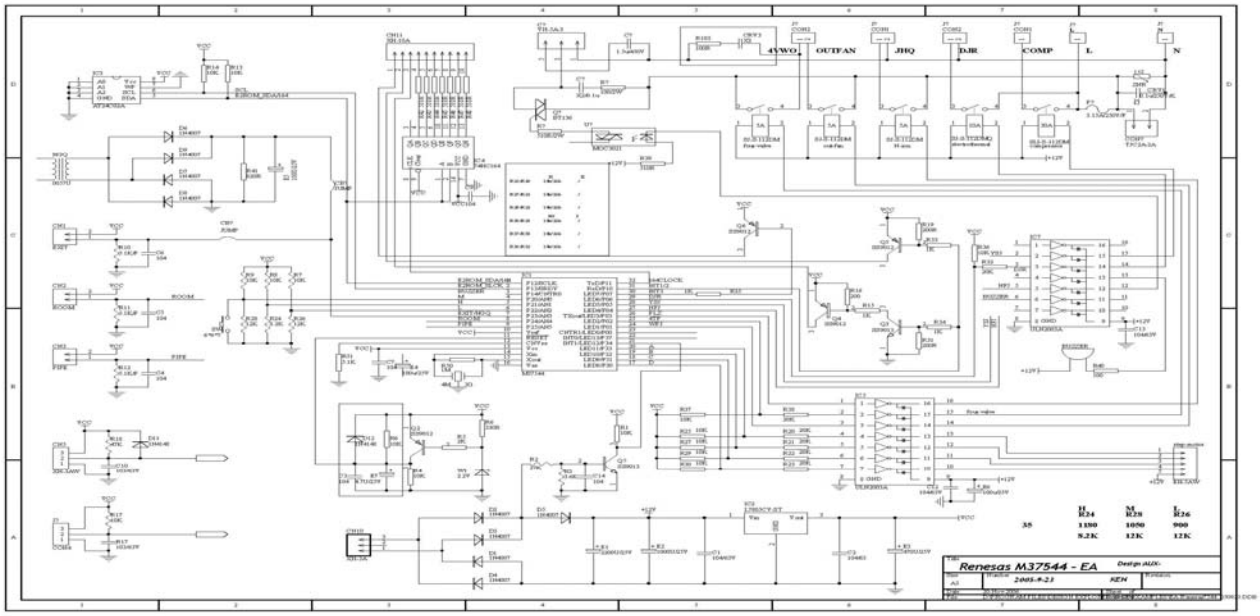

(2) Main P.C.B ASM for 7K, 9K, 12K BTU, E# series (Renesas Chip)

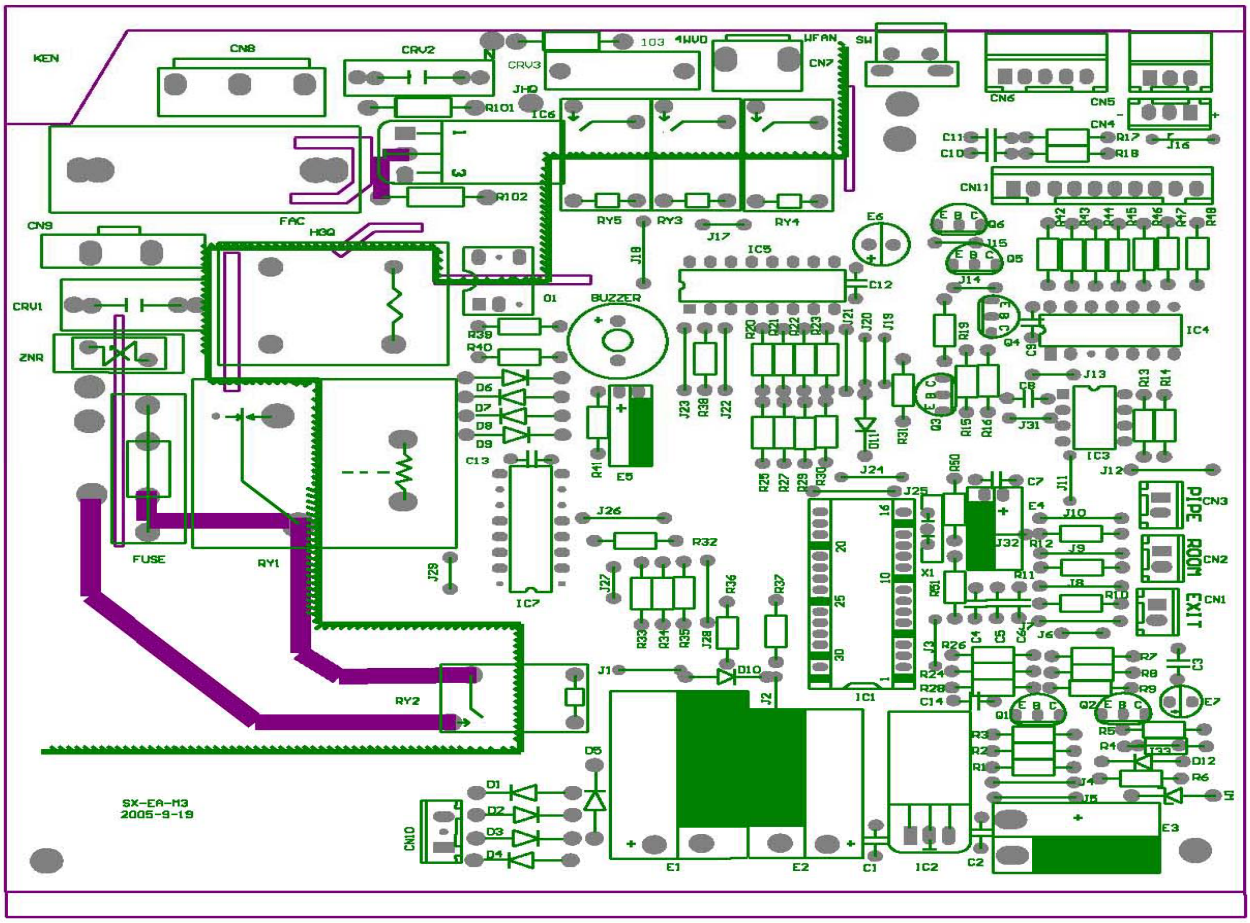

(3) Schematic Diagram for 18K,24K BTU, E# series (Renesas Chip)

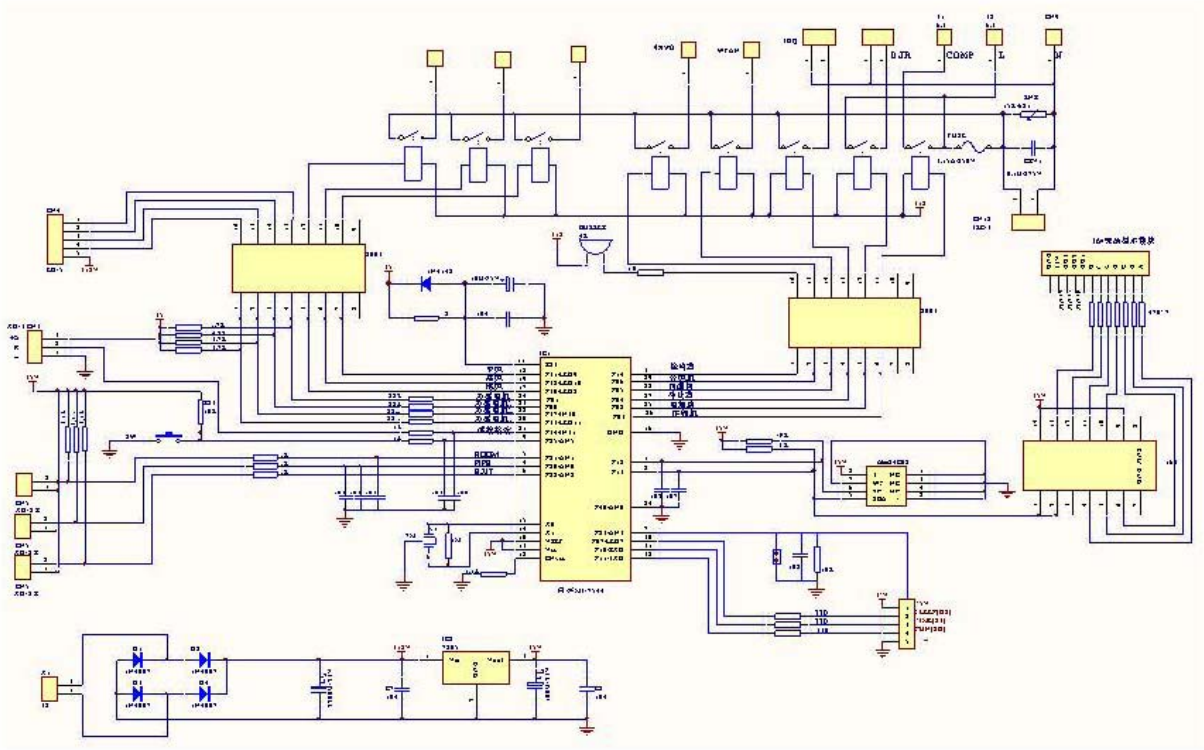

(4) Main P.C.B ASM for 18K, 24K BTU, E# series (Renesas Chip)

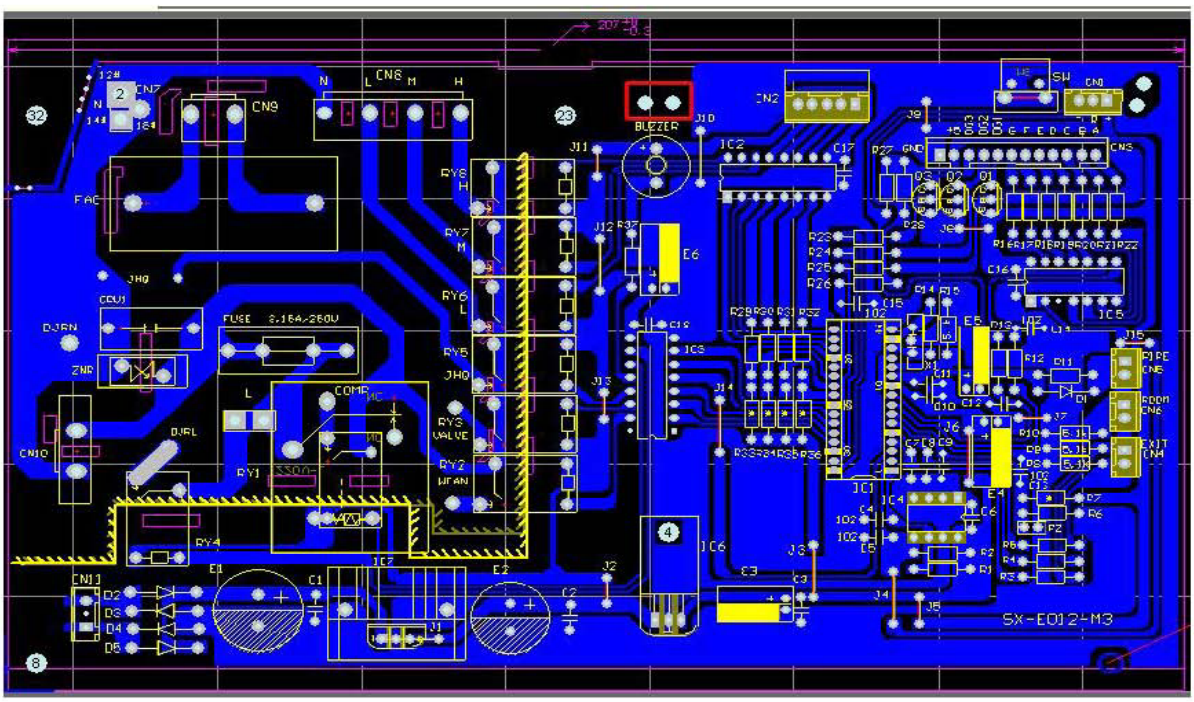

Exploded Pictures

(1) Indoor unit exploded picture (7K, 9K, 12K BTU, E# Series)

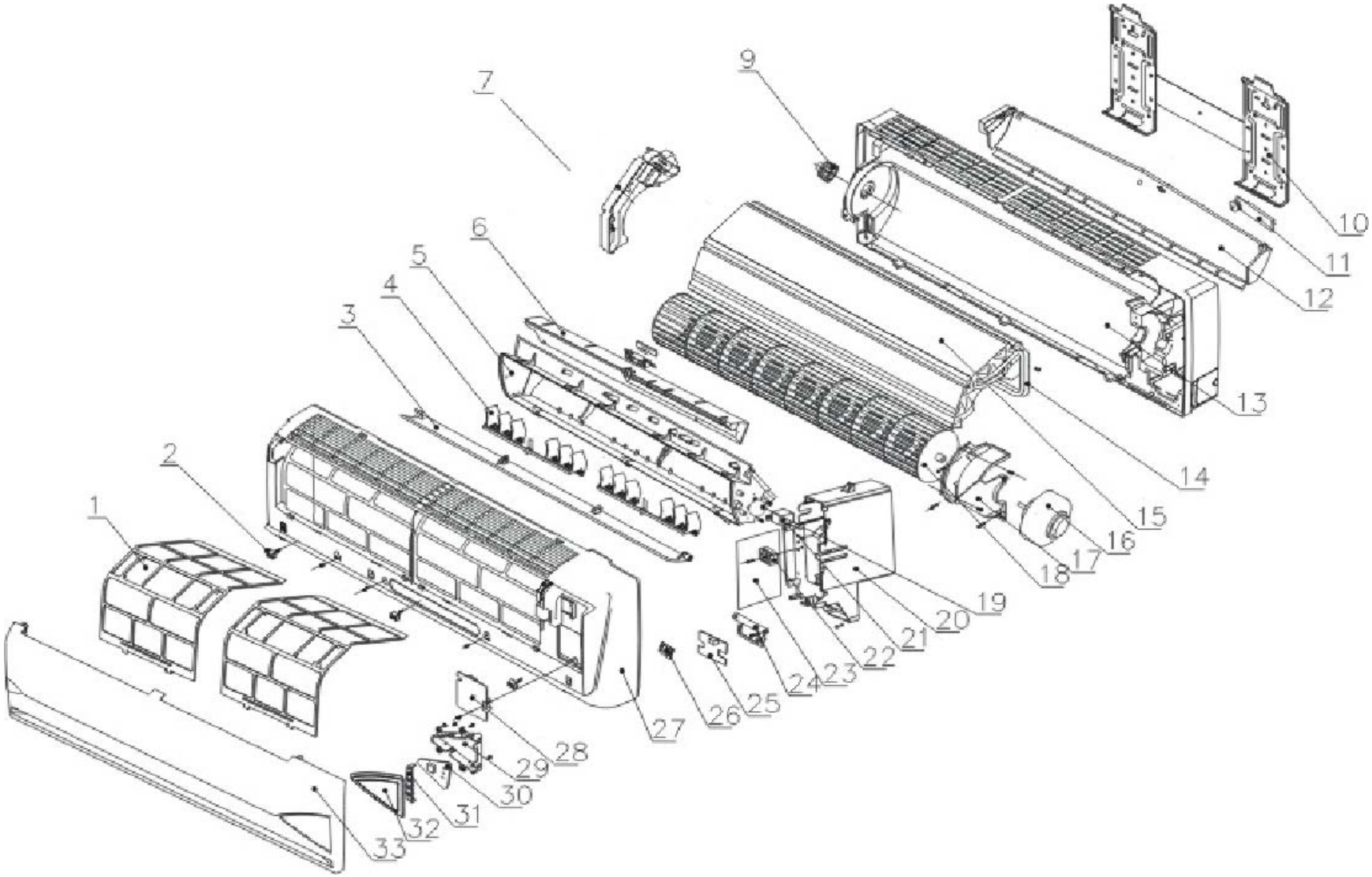

No.	Name of part	quantity
1	Filter	2
2	Screw cover	3
3	Horizontal air blade	1
4	Vertical air blade	2
5	Air blade holder	1
6	Foam of air blade holder	1
7	Plastic holder for left crutch of evaporator	1
9	plastic bearing holder	1
10	Mounting plate	1
11	Clamp of copper pipe	1
12	Foam of chassis	1
13	Chassis	1
14	Tubing	1
15	evaporator	1
16	Indoor fan motor	1
17	Cover of indoor fan motor	1
18	Indoor fan	1
19	Step motor	1
20	Controller box	1
21	transformer	1
22	Terminal board	1
23	Main PCB	1
24	Receiver holder of remote controller	1
25	Auxiliary PCB	1
26	Receiver window	1
27	Medium frame	1
28	Cover of medium frame	1
29	Indication lights holder	1
30	Display board	1
31	Cover of indication lights	1
32	Board of indication lights	1
33	Panel	1
	Remote control	1

(2) Outdoor unit exploded picture (7K, 9K, 12K BTU, E# Series)

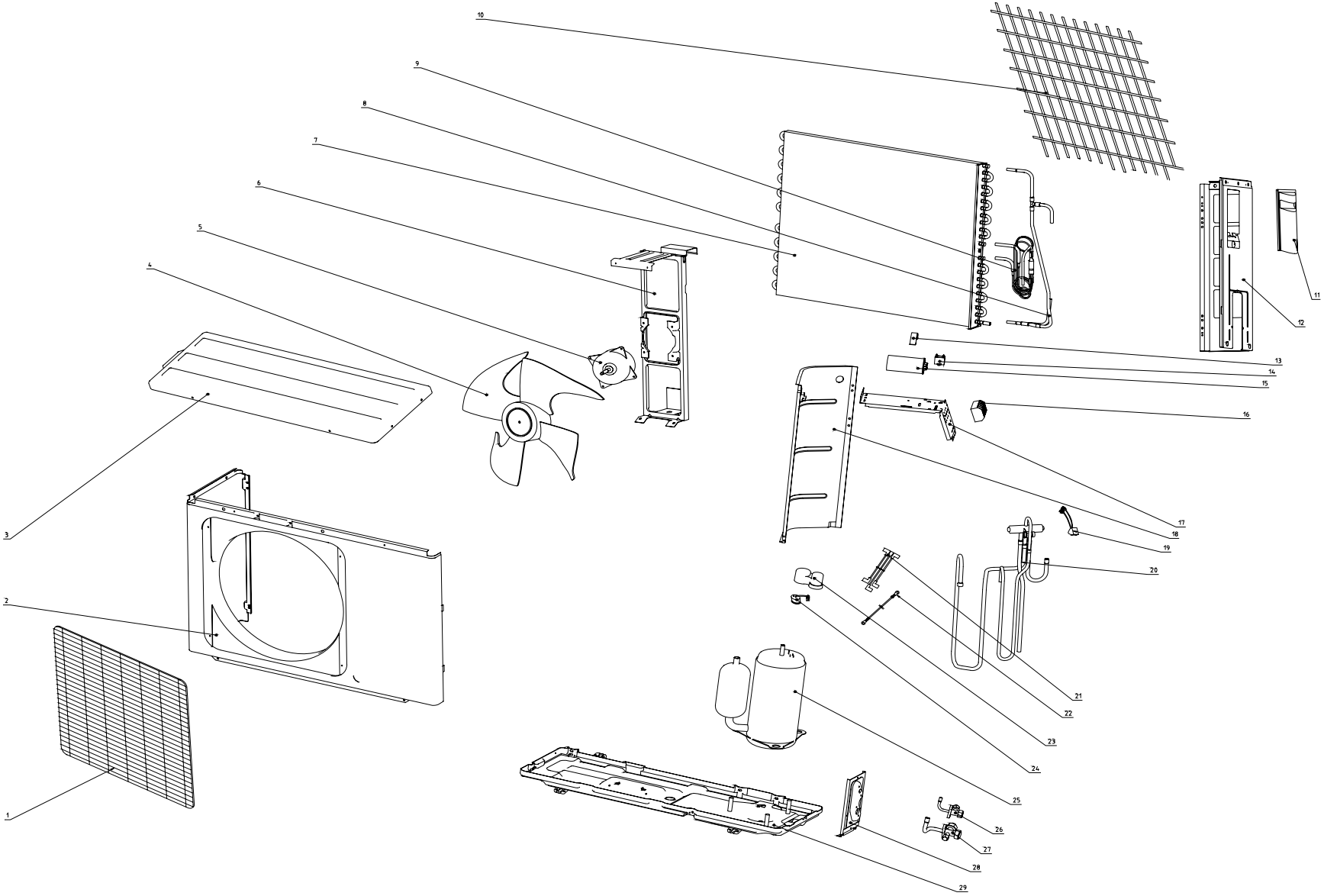

No.	Name	Quantity
1	Steel grille	1
2	Front panel	1
3	Top cover board	1
4	Outdoor fan	1
5	Outdoor fan motor	1
6	Motor bracket	1
7	Condenser assembly	1
8	Condenser gas inlet tube	1
9	Capillary assembly	1
10	Backside steel grille	1
11	Handle	1
12	Right-side plate	1
13	Capacitor clamp	1
14	Fan motor capacitor	1
15	Compressor capacitor	1
16	Terminal board	1
17	Electrical holding plate	1
18	Partition plate	1
19	Electromagnetic loop	1
20	Four-way valve and capillary assembly	1
21	Compressor connection cord	1
22	Compressor grounding cord	1
23	Compressor terminal cover	1
24	Over-load protector	1
25	Compressor	1
26	Liquid valve	1
27	Gas valve	1
28	Valve plate	1
29	Chassis	1

(3) Indoor unit exploded picture (18K, 24K BTU, E# Series)

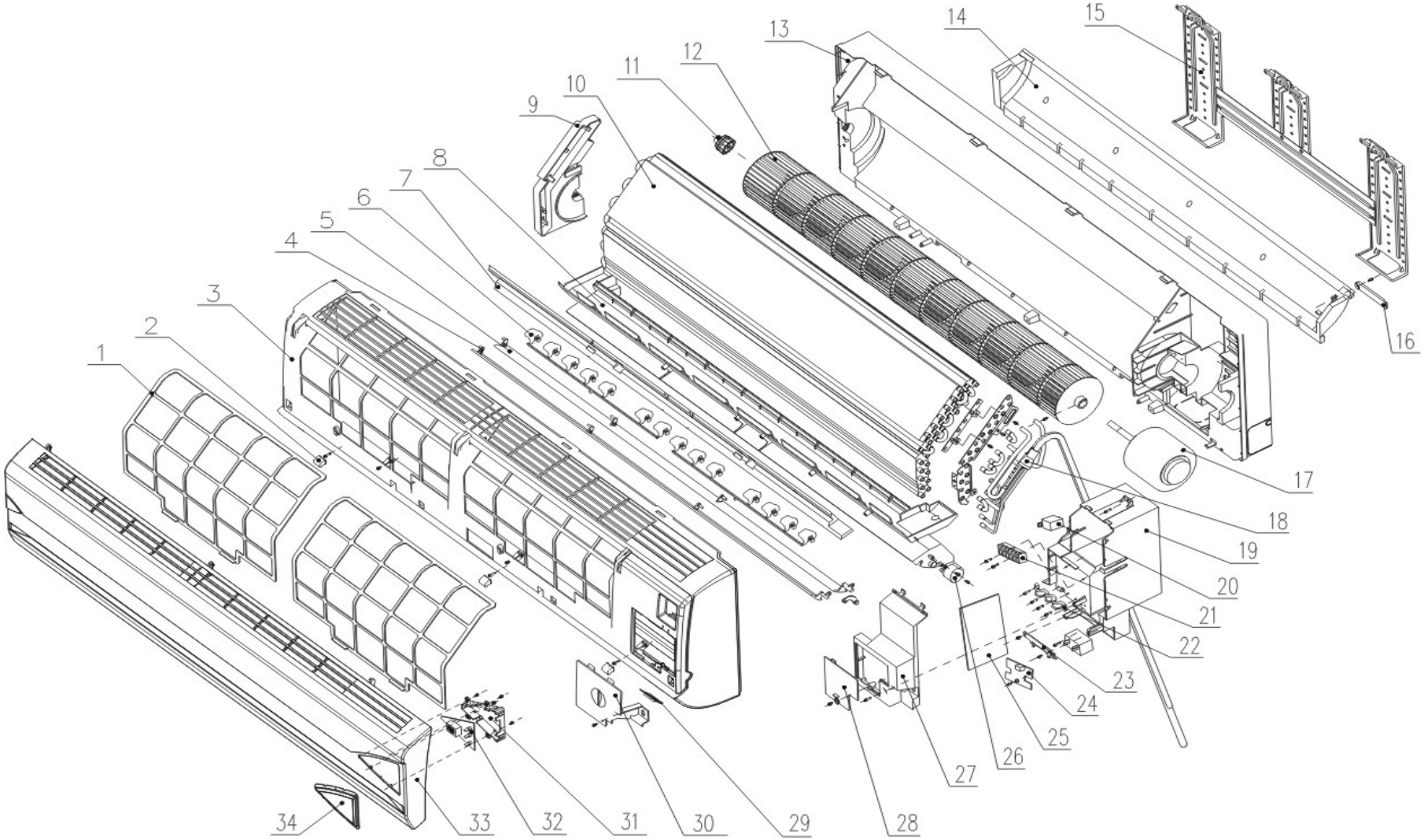

No.	Name	Quantity
1	Filter	2
2	Screw cover	3
3	Medium frame	1
4	Horizontal air blade A	1
5	Horizontal air blade B	1
6	Vertical air blade	2
7	Foam of air blade holder	3
8	Air blade holder	1
9	Plastic holder for left crutch of evaporator	1
10	Evaporator	1
11	Plastic bearing holder	1
12	Indoor fan	1
13	Chassis	1
14	Foam of chassis	1
15	Mounting plate	1
16	Pipe clamp	1
17	Indoor fan motor	1
18	Catching pipe assembly	1
19	Controller box	1
20	Transformer	1
21	Terminal board	1
22	Clamping plate	1
23	Receiver holder of remote controller	1
24	Auxiliary PCB Ⅰ	1
25	Main PCB	1
26	Step motor	1
27	Top cover of control box	1
28	Cover of the connection line	1
29	Window for receiving	1
30	Cover of the control box	1
31	Board of indication lights	1
32	Auxiliary PCB Ⅱ	1
33	Panel	1
34	Display board	1

(4) Outdoor unit exploded picture (18K, 24K BTU, E# Series)

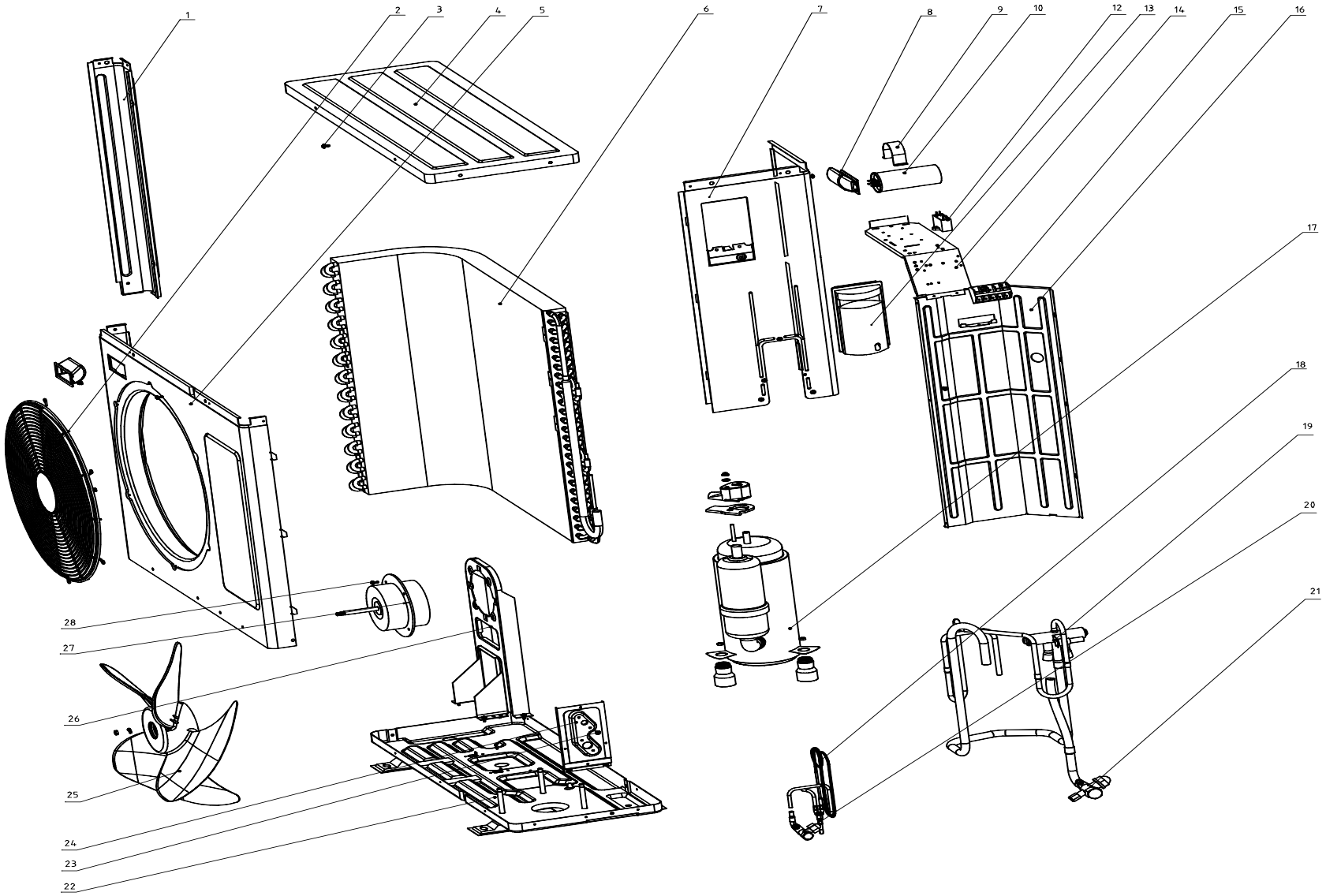

No.	Name	Quantity
1	Left-side supporting plate	1
2	Steel grille	1
3	Screw	4
4	Top cover board	1
5	Front panel	1
6	Condenser assembly	1
7	Right-side panel plate	1
8	Handle	2
9	Capacitor clamp	1
10	Compressor capacitor	1
11	Fan motor capacitor	1
12	Wiring clamping cover	1
13	Electrical holding plate	1
14	Terminal board	1
15	Partition plate	1
16	Compressor	1
17	Capillary assembly	1
18	Four-way valve assembly	1
19	Liquid valve Dg4	1
20	Gas valve Dg10	1
21	Chassis	1
22	Screw	4
23	Valve plate	1
24	Outdoor fan	1
25	Motor bracket	1
26	Outdoor fan motor	1
27	Screw	4

AUX 宁波奥克斯空调有限公司
ADD:No556,east Yinzhou Greatroad,Ningbo,P.R.China
Tel:+86(574)8822 0156 Fax:+86(574)8822 0683
Code:315100
Http://www.cnaux.com