Hisense

SPLIT TYPE AIR CONDITIONER

SERVICE MANUAL

AS-09UR4SVDTL
AS-12UR4SVDTL
AS-18UR4SUATL
AS-24UR4SFBTL

Hisense Corporation

Type of contents

1. OPERATION RANGE

2. INSTALLATION

3. REFRIGERANT FLOW DIAGRAM

4. ELECTRICAL DATA

5. CONTROL MODE

6. TROUBLE SHOOTING

7. CHECKING COMPONENTS

NOTE: The figure、size and parameter of the product may not be identical with the service manual, please take the actual product as the standard.

1. OPERATING RANGE

	Temperature	Indoor Air Intake Temp.	Outdoor Air Intake Temp
COOLING	Maximum	32℃ D.B./23℃ W.B.	43 ℃ D.B./26℃ W.B.
	Minimum	21℃ D.B./15℃ W.B.	21 ℃ D.B./15℃ W.B.
HEATING	Maximum	27℃ D.B./18℃ W.B.	24℃ D.B./18℃ W.B.
	Minimum	20℃ D.B/≤15℃ W.B	-7℃ D.B./-8℃ W.B.

2. INSTALLATION

1、How to choose an air conditioner（only for reference）:

a. Choice for reference: 170W/㎡ for average rooms;

b. Choice for reference: 160-200W/㎡ for small size offices;

c. Choice for reference: 220-350W/㎡ for restaurants;

d. Choice for reference: 200-300W/㎡ for entertaining venues;

e. Choice for reference: 220-280W/㎡ for the top floor.

Note:1W = 3.412btu.

2、Indoor Unit:

2.1. Distance for the indoor unit:

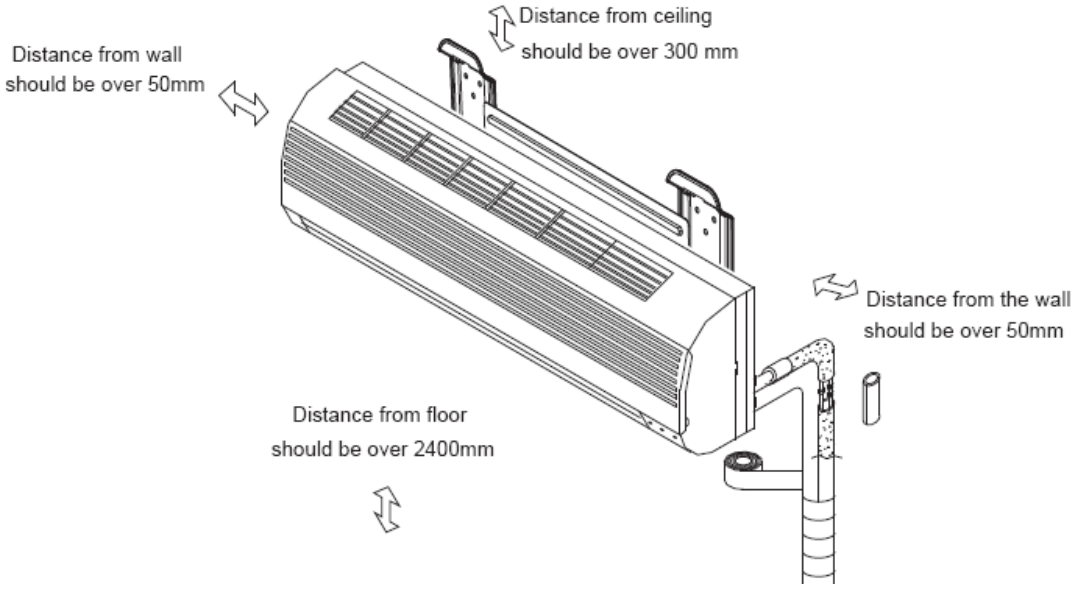

Note: a.The wallboard must be smooth and straight, with its supporting force of not less than 60 kg.

2.1 Install for the installation template:

2. INSTALLATION

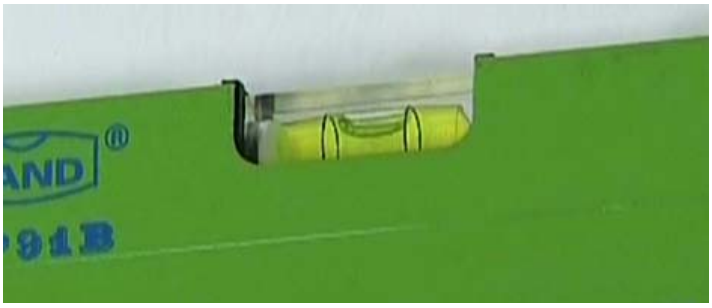

Note: The installation template should be installed level.

2.3. Drilling:

Note: The tool need to raise 5 degrees when drilling, so that the hole of the indoor side will be higher than the outdoor side, the water can drain smoothly.

2.4 Bend the evaporator pipe:

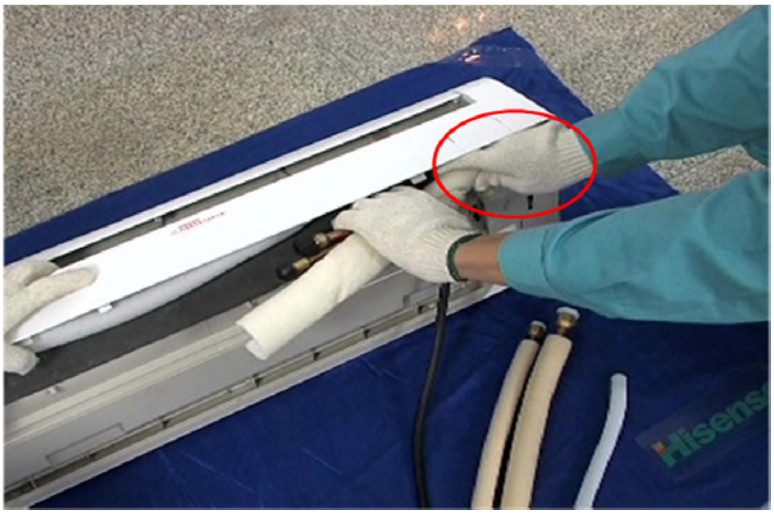

Note: When you bend the evaporator pipe, you should use your right hand hold the pipe tightly at bends, and then use the left hand bend the pipe slowly.

2. INSTALLATION

3、Outdoor Unit:

3.1. The distance of the outdoor unit:

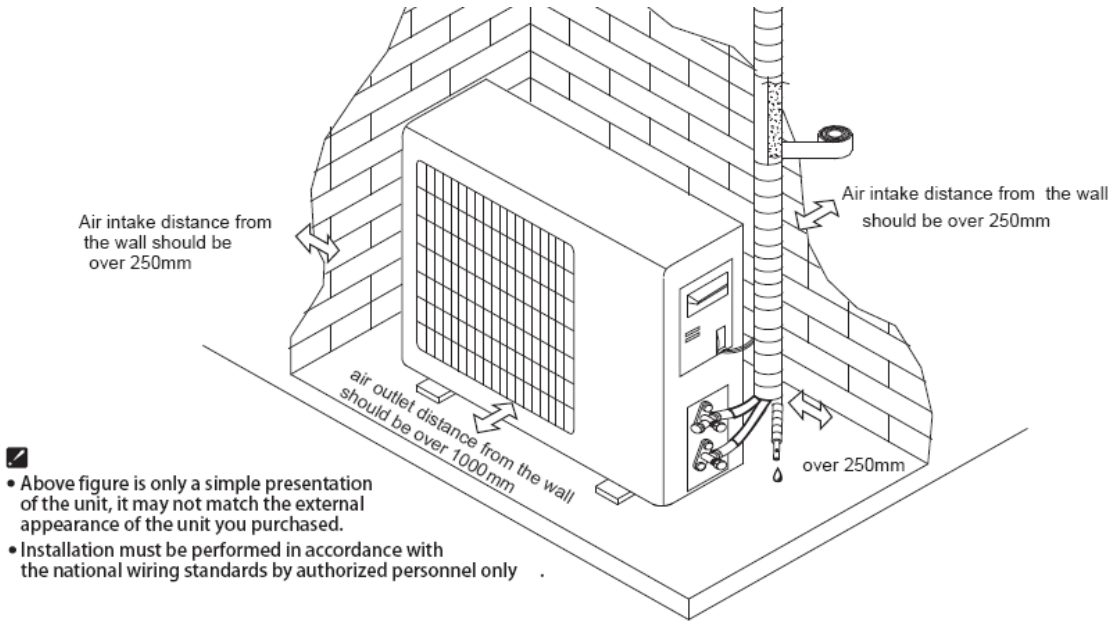

Note: The wallboard supporting force should be able to withstand four times the weight of the outdoor unit, and not less than 180 kg.

3.2. Fix for the outdoor unit:

Note: The outdoor unit base must be fixed with the bolts to reduce vibration and noise, if necessary the shock pad can be used.

4. The height difference and the connection pipe length:

2. INSTALLATION

When install the unit, please follow the following principle:

4.1.The height difference between the indoor unit and the outdoor unit should not exceed 5m;

4.2.The connection pipe length should be not less than 1m;

4.3.The longest connection pipe is 15m for the unit(Recommendation: The longest connection pipe is 10m for 9K and 12K unit and 15m for 18K,24K and 30K unit);

4.4. Normally, the connection pipe does not exceed 5m, if the connection pipe exceed 5m, it should add some gas for the unit, the amount of the gas that recharged is based on the diameter and length of the liquid pipe, and the recharged gas Xg=(the liquid pipe length -5m)*(*sheet*g/m), for example, for one heat pump single split air conditioner, if the diameter of the liquid pipe is Φ9.53 , and the liquid pipe length is 7m, it means that it should charge (7m-5m)*50g/m=100g gas for the unit refer to the following sheet:

The diameter for the connection pipe(mm)		**single split air conditioner**	
Liquid pipe	Gas pipe	cooling only（g / m）	heat pump（g / m）
Φ6.35	Φ9.53 or Φ12.7	15	20
Φ6.35 or Φ9.53	Φ15.88 or Φ19.05	15	50

3. REFRIGERANT FLOW DIAGRAM

3-1. Refrigerant flow diagram :

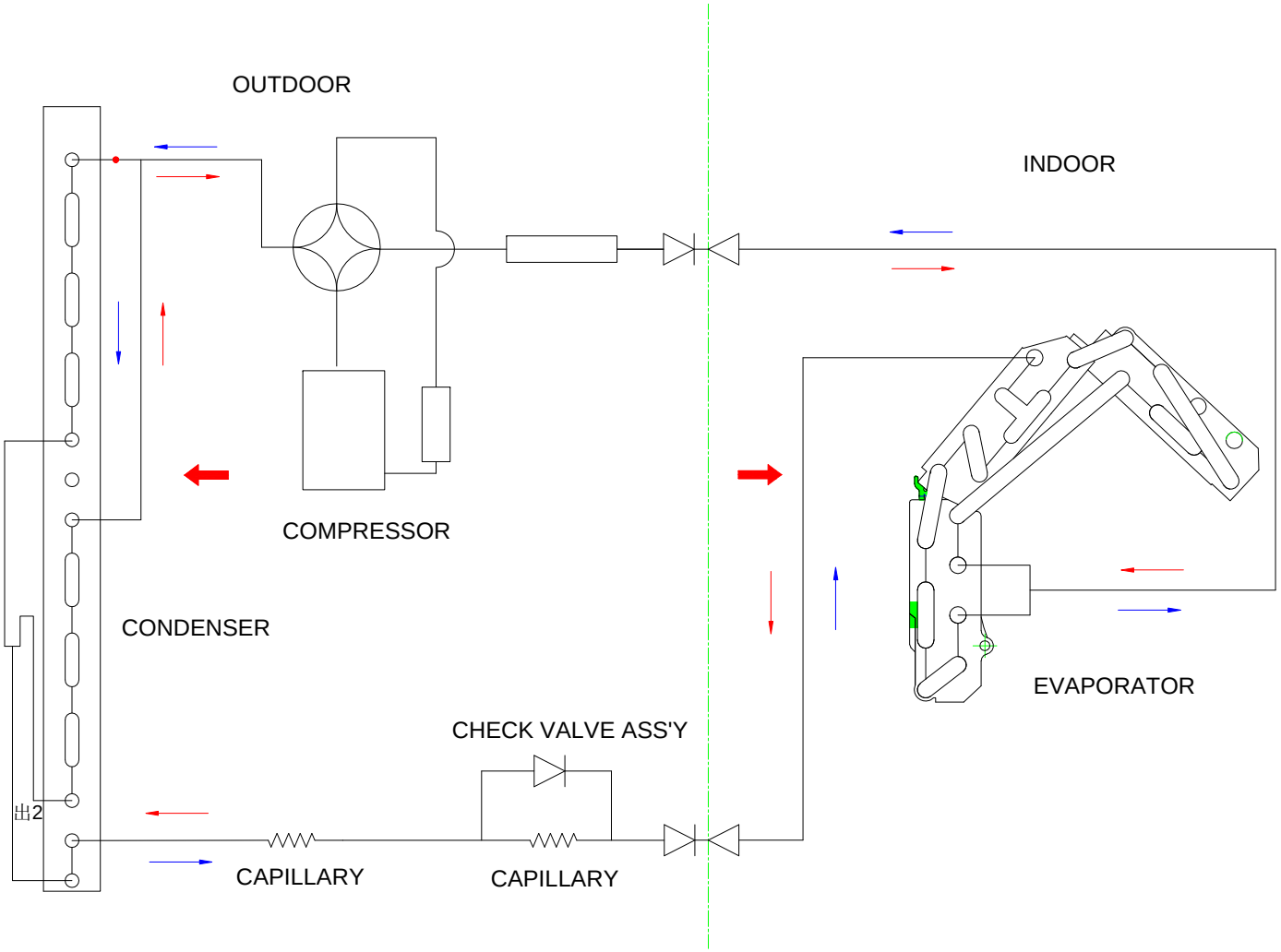

3. REFRIGERANT FLOW DIAGRAM

3 -2. Evacuation procedures:

EVACUATION PROCEDURES

Connect the refrigerant pipes (both the liquid and gas pipes) between the indoor and the outdoor units.

Remove the service port cap of the stop valve on the side of the outdoor unit gas pipe. (The stop valve will not work in its initial state fresh out of the factory (totally closed with cap on).

Connect the gage manifold valve and the vacuum pump to the service port of the stop valve on the gas pipe side of the outdoor unit.

Run the vacuum pump for more than 15 minutes and at this time confirm that the pressure gage indicates -0.1 Mpa (-76 cmHg).

Check the vacuum with the gage manifold valve, then close the gage manifold valve, and stop the vacuum pump.

Leave it as is for one or two minutes .Make sure the pointer of the gage manifold valve remains in the. same position.

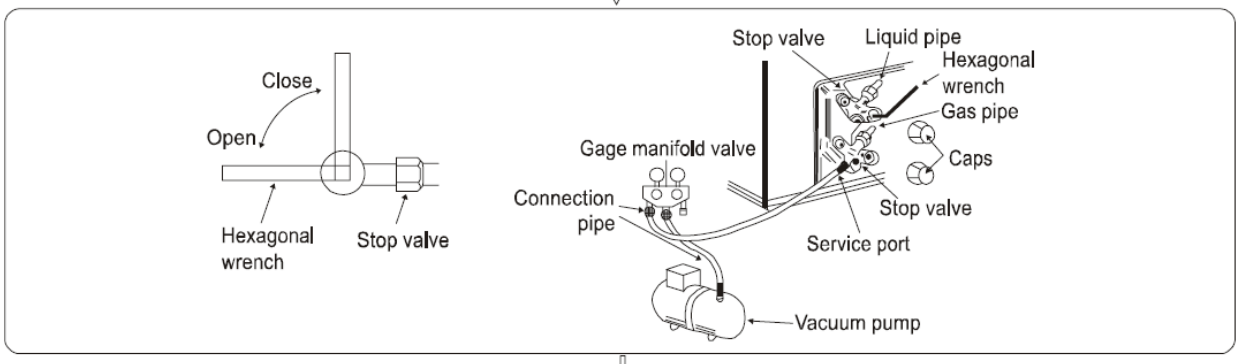

Remove the gage manifold valve quickly from the service port of the stop valve.

After refrigerant pipes are connected and evacuated, fully open all stop valves on gas and liquid pipe sides.
Operating without fully opening lowers the performance and causes trouble.

Pipe length 5m maximum No gas charge is needed.

Pipe length exceeding 5m Charge the prescribed amount of gas.

Tighten the cap to the service port to obtain the initial status.

Retighten the cap.

Leak test

4. ELECTRICAL DATA

4-1.Electrical wiring diagrams

NOTE: YE/GN=YELLOW/GREEN, BU=BLUE, BN=BROWN, WH=WHITE, BK=BLACK, VT=VIOLET, OG=ORANGE, RD=RED,BRN=BROWN,BLU=BLUE,BLK=BLACK,WHT=WHITE

INDOOR:

（1）AS-09UR4SVDTL AS-12UR4SVDTL （indoor）：

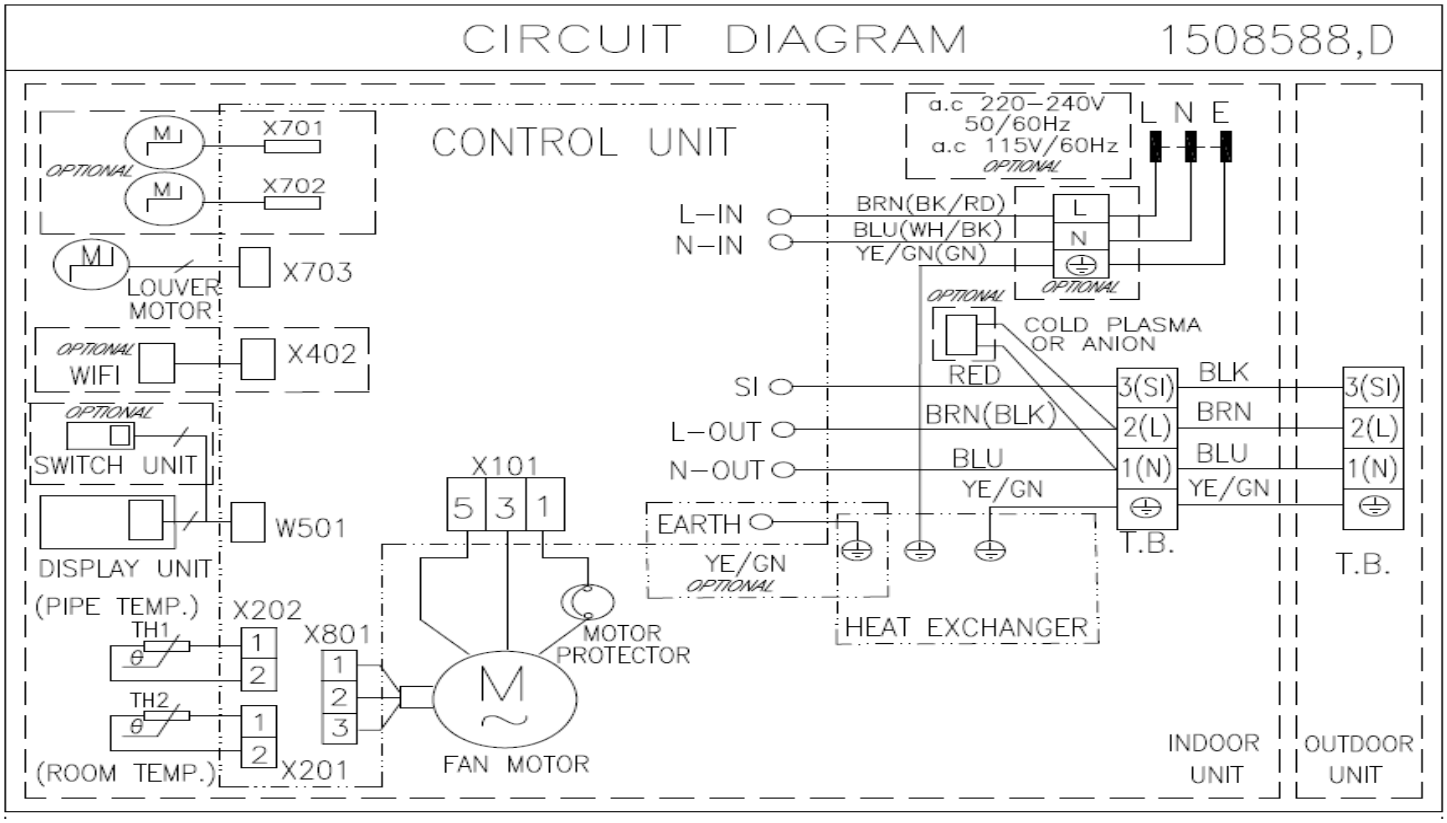

（2）AS-18UR4SUATL AS-24UR4SFBTL（indoor）：

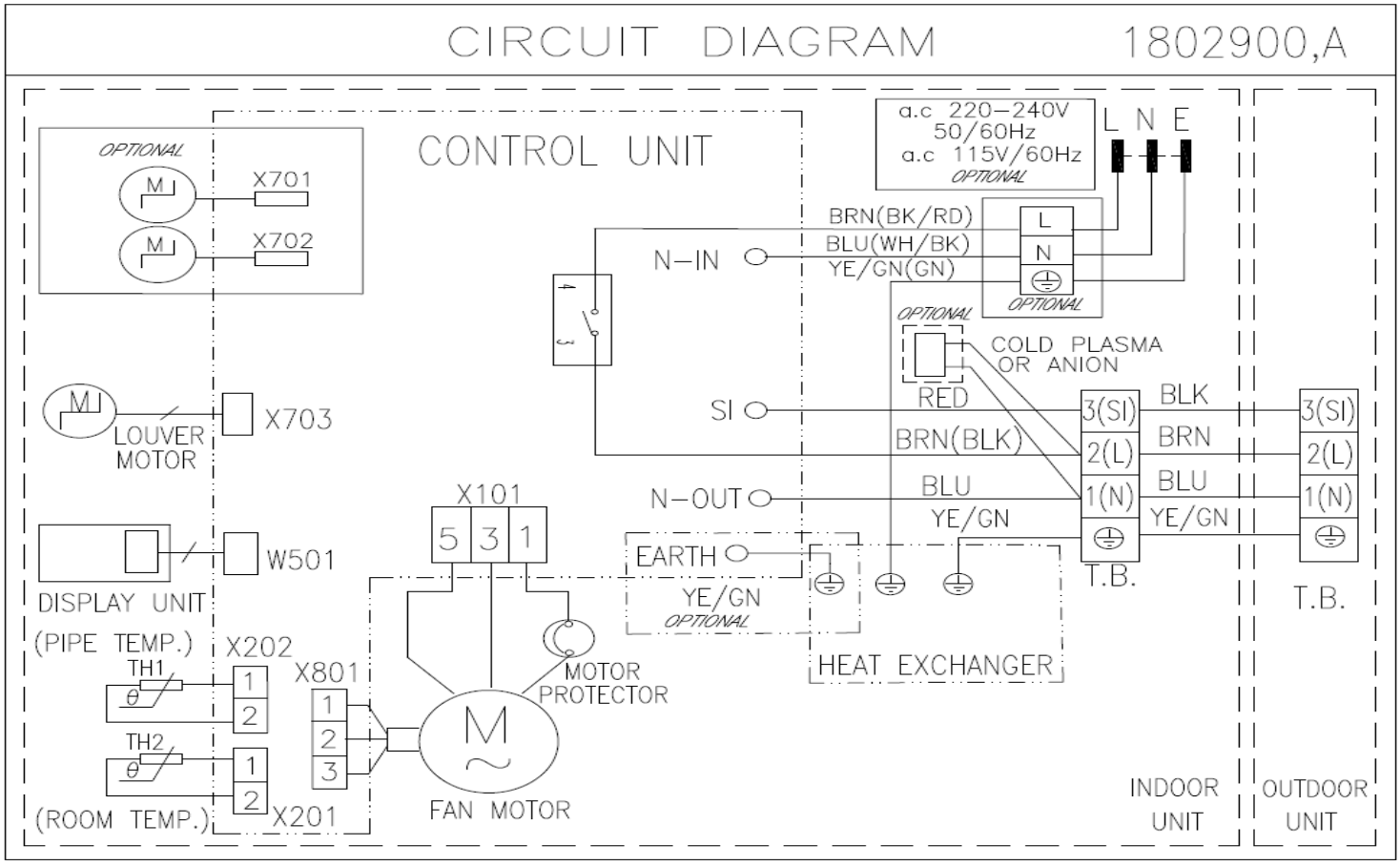

4. ELECTRICAL DATA

OUTDOOR

（1）AS-09UR4SVDTL AS-12UR4SVDTL（outdoor）

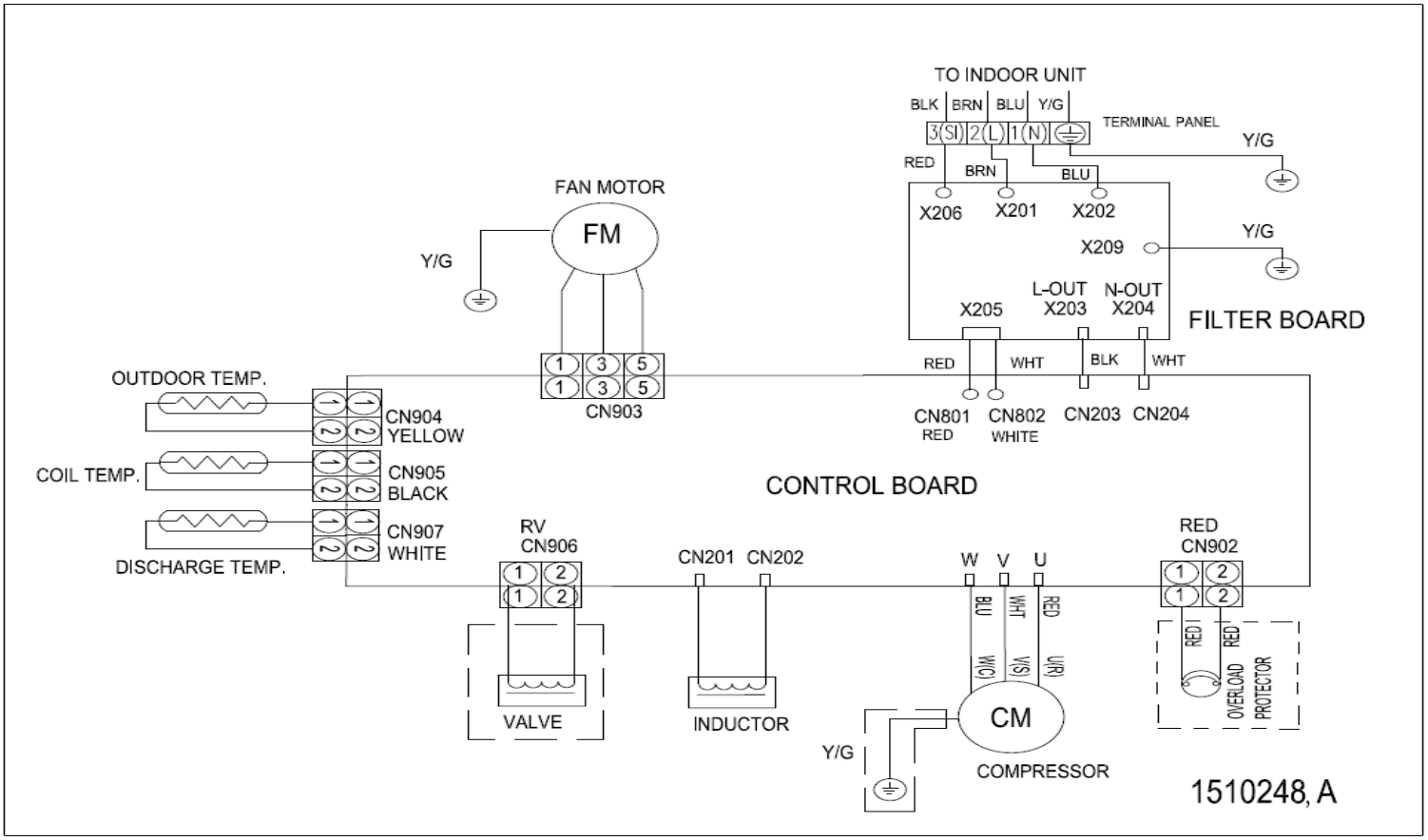

（2）AS-18UR4SUATL AS-24UR4SFBTL（outdoor）

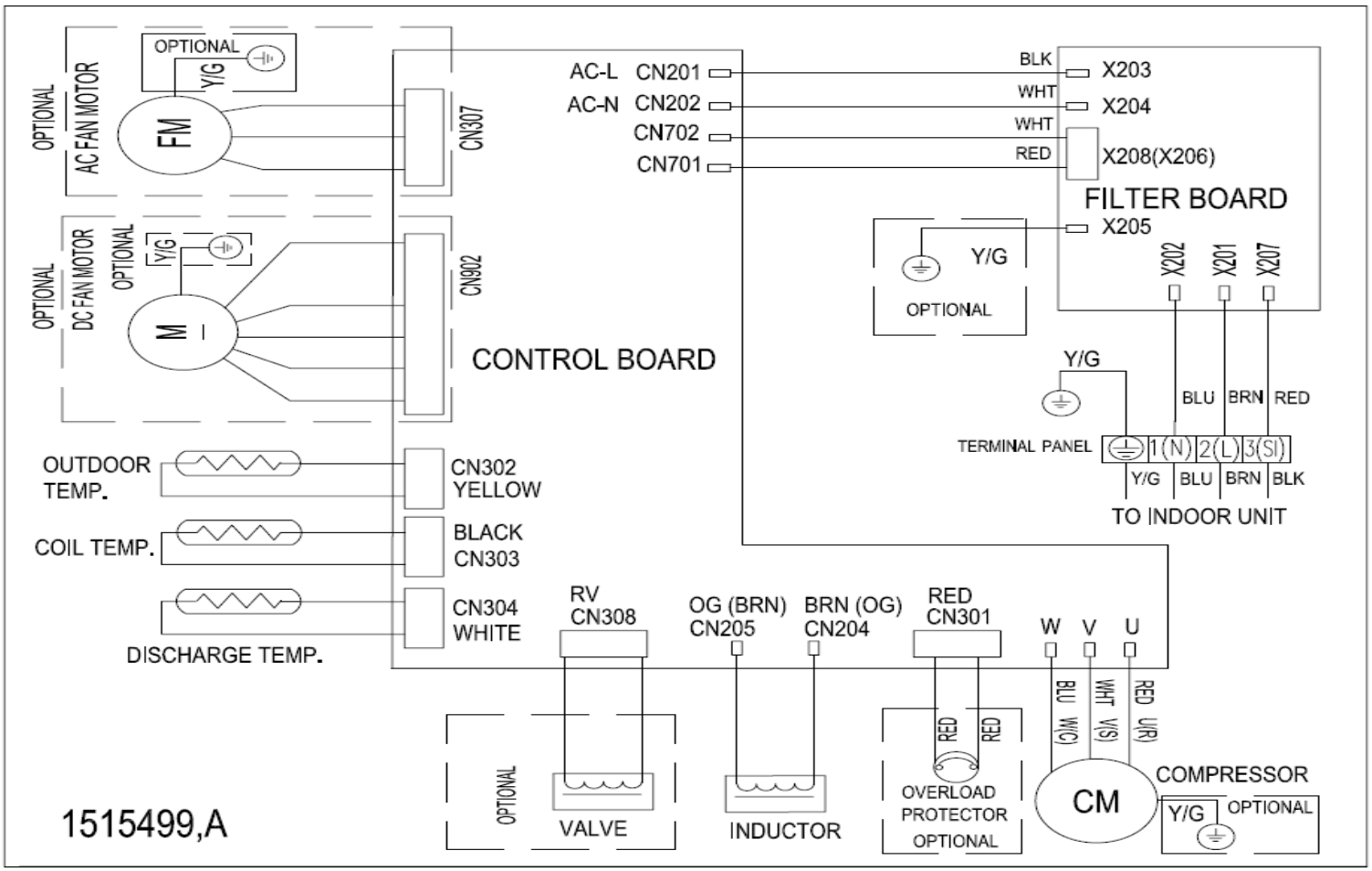

4. ELECTRICAL DATA

4-2. Sensor parameter

1. THE PARAMETER OF OUTDOOR DISCHARGE TEMPERATURE SENSOR FOR COMPRESSOR::
（R_0=187.25K±6.3%；R_{100}=3.77K±2.5K；B=3979±1%）

T(℃)	R(KΩ)	V(v)	DEC	HEX	T(℃)	R(KΩ)	V(v)	DEC	HEX	T(℃)	R(KΩ)	V(v)	DEC	HEX
-30	966.1	0.1014	5	5	26	55.46	1.3252	68	44	82	6.662	3.7507	191	BF
-29	910.3	0.1075	5	5	27	53.11	1.3678	70	46	83	6.446	3.7813	193	C1
-28	858	0.1139	6	6	28	50.86	1.4112	72	48	84	6.239	3.8111	194	C2
-27	809	0.1206	6	6	29	48.72	1.4552	74	4A	85	6.039	3.8404	196	C4
-26	763.1	0.1277	7	7	30	46.68	1.4997	76	4C	86	5.846	3.8691	197	C5
-25	720	0.1351	7	7	31	44.74	1.5446	79	4F	87	5.661	3.8970	199	C7
-24	679.6	0.1429	7	7	32	42.89	1.5901	81	51	88	5.482	3.9243	200	C8
-23	641.7	0.1511	8	8	33	41.13	1.6359	83	53	89	5.309	3.9512	202	CA
-22	606.1	0.1597	8	8	34	39.44	1.6824	86	56	90	5.143	3.9773	203	CB
-21	572.7	0.1687	9	9	35	37.84	1.7289	88	58	91	4.982	4.0029	204	CC
-20	541.3	0.1782	9	9	36	36.3	1.7762	91	5B	92	4.827	4.0279	205	CD
-19	511.7	0.1881	10	A	37	34.84	1.8235	93	5E	93	4.678	4.0522	207	CF
-18	484	0.1984	10	A	38	33.44	1.8713	95	5F	94	4.534	4.0760	208	D0
-17	457.9	0.2092	11	B	39	32.11	1.9190	98	62	95	4.395	4.0992	209	D1
-16	433.3	0.2206	11	B	40	30.83	1.9673	100	64	96	4.261	4.1218	210	D2
-15	410.2	0.2325	12	C	41	29.61	2.0157	103	67	97	4.132	4.1439	211	D3
-14	388.5	0.2448	12	C	42	28.45	2.0640	105	69	98	4.007	4.1655	212	D4
-13	368	0.2577	13	D	43	27.34	2.1124	108	6C	99	3.886	4.1866	214	D6
-12	348.7	0.2712	14	E	44	26.27	2.1612	110	6E	100	3.77	4.2070	215	D7
-11	330.5	0.2853	15	F	45	25.25	2.2099	113	71	101	3.658	4.2269	216	D8
-10	313.4	0.2999	15	F	46	24.28	2.2584	115	73	102	3.549	4.2465	217	D9
-9	297.2	0.3153	16	10	47	23.35	2.3068	118	76	103	3.444	4.2655	218	DA
-8	281.9	0.3312	17	11	48	22.46	2.3552	120	78	104	3.343	4.2839	218	DA
-7	267.5	0.3478	18	12	49	21.6	2.4038	123	7B	105	3.15	4.3197	220	DC
-6	253.9	0.3651	19	13	50	20.79	2.4516	125	7D	106	3.059	4.3367	221	DD
-5	241.1	0.3830	20	14	51	20.01	2.4994	127	7F	107	2.97	4.3535	222	DE
-4	229	0.4016	20	14	52	19.26	2.5471	130	82	108	2.884	4.3699	223	DF
-3	217.6	0.4209	21	15	53	18.54	2.5947	132	84	109	2.802	4.3856	224	E0
-2	206.8	0.4409	22	16	54	17.85	2.6420	135	87	110	2.721	4.4012	224	E0
-1	196.6	0.4617	24	17	55	17.19	2.6889	137	89	111	2.721	4.4012	224	E0
0	186.9	0.4833	25	18	56	16.56	2.7352	139	8B	112	2.644	4.4162	225	E1
1	177.8	0.5056	26	19	57	15.96	2.7809	142	8E	113	2.569	4.4309	226	E2
2	169.2	0.5285	27	1A	58	15.38	2.8265	144	90	114	2.496	4.4452	227	E3
3	161	0.5525	28	1B	59	14.82	2.8719	146	92	115	2.426	4.4591	227	E3
4	153.3	0.5770	29	1C	60	14.29	2.9163	149	95	116	2.358	4.4727	228	E4
5	146	0.6024	31	1E	61	13.78	2.9603	151	97	117	2.292	4.4859	229	E5
6	139	0.6289	32	1F	62	13.28	3.0048	153	99	118	2.228	4.4988	229	E5
7	132.5	0.6557	33	21	63	12.81	3.0479	155	9B	119	2.167	4.5112	230	E6
8	126.3	0.6835	35	23	64	12.36	3.0902	158	9E	120	2.107	4.5235	231	E7
9	120.4	0.7123	36	24	65	11.93	3.1319	160	A0	121	2.049	4.5354	231	E7
10	114.8	0.7418	38	26	66	11.51	3.1736	162	A2	122	2.049	4.5354	231	E7
11	109.5	0.7722	39	27	67	11.11	3.2144	164	A4	123	1.994	4.5467	232	E8
12	104.4	0.8039	41	29	68	10.73	3.2541	166	A6	124	1.887	4.5689	233	E9
13	99.66	0.8357	43	2B	69	10.36	3.2938	168	A8	125	1.836	4.5796	234	EA
14	95.13	0.8686	44	2D	70	10	3.3333	170	AA	126	1.787	4.5899	234	EA
15	90.82	0.9024	46	2C	71	9.659	3.3717	172	AC	127	1.739	4.6000	235	EB
16	86.74	0.9369	48	2E	72	9.331	3.4094	174	AE	128	1.693	4.6098	235	EB
17	82.85	0.9723	50	32	73	9.016	3.4464	176	B0	129	1.649	4.6192	236	EC
18	79.16	1.0085	51	33	74	8.712	3.4829	178	B2	130	1.605	4.6286	236	EC
19	75.65	1.0455	53	35	75	8.421	3.5185	179	B3					
20	72.32	1.0832	55	37	76	8.14	3.5537	181	B5					
21	69.15	1.1217	57	39	77	7.869	3.5882	183	B7					
22	66.13	1.1610	59	3B	78	7.609	3.6220	185	B9					
23	63.27	1.2009	61	3D	79	7.359	3.6551	186	BA					
24	60.54	1.2416	63	3F	80	7.118	3.6876	188	BC					
25	57.94	1.2830	65	41	81	6.885	3.7195	190	BE					

4. ELECTRICAL DATA

2. THE PARAMETER OF THE OUTDOOR COIL AND OUTDOOR AMBIENT AND INDOOR TEMPERATURE SENSOR：（R_0=15K±2%；B=3450±2%）

T(℃)	R(KΩ)	V(v)	DEC	HEX	T(℃)	R(KΩ)	V(v)	DEC	HEX	T(℃)	R(KΩ)	V(v)	DEC	HEX
-30	67.94	0.3235	16	10	18	6.962	2.0151	103	67	66	1.297	3.9186	200	C8
-29	64.25	0.3408	17	11	19	6.688	2.0636	105	69	67	1.258	3.9443	201	C9
-28	60.79	0.3588	18	12	20	6.427	2.1120	108	6C	68	1.22	3.9696	202	CA
-27	57.53	0.3776	19	13	21	6.178	2.1603	110	6E	69	1.184	3.9939	204	CC
-26	54.48	0.3971	20	14	22	5.939	2.2089	113	71	70	1.149	4.0178	205	CD
-25	51.6	0.4174	21	15	23	5.712	2.2570	115	73	71	1.116	4.0406	206	CE
-24	48.9	0.4384	22	16	24	5.494	2.3053	118	76	72	1.083	4.0636	207	CF
-23	46.35	0.4603	23	17	25	5.286	2.3533	120	78	73	1.051	4.0862	208	D0
-22	43.96	0.4829	25	19	26	5.086	2.4014	122	7A	74	1.021	4.1077	209	D1
-21	41.7	0.5065	26	1A	27	4.896	2.4489	125	7D	75	0.9914	4.1290	211	D3
-20	39.58	0.5307	27	1B	28	4.714	2.4963	127	7F	76	0.963	4.1497	212	D4
-19	37.58	0.5558	28	1C	29	4.539	2.5436	130	82	77	0.9354	4.1701	213	D5
-18	35.69	0.5818	30	1E	30	4.372	2.5904	132	84	78	0.9088	4.1898	214	D6
-17	33.91	0.6087	31	1F	31	4.212	2.6369	134	86	79	0.8831	4.2091	215	D7
-16	32.23	0.6363	32	20	32	4.059	2.6830	137	89	80	0.8582	4.2280	216	D8
-15	30.65	0.6648	34	22	33	3.912	2.7288	139	8B	81	0.8342	4.2463	217	D9
-14	29.15	0.6942	35	23	34	3.772	2.7738	141	8D	82	0.8109	4.2643	217	D9
-13	27.74	0.7244	37	25	35	3.637	2.8188	144	90	83	0.7884	4.2818	218	DA
-12	26.4	0.7556	39	27	36	3.508	2.8631	146	92	84	0.7666	4.2988	219	DB
-11	25.14	0.7875	40	28	37	3.384	2.9070	148	94	85	0.7455	4.3155	220	DC
-10	23.95	0.8202	42	2A	38	3.265	2.9504	150	96	86	0.725	4.3318	221	DD
-9	22.82	0.8539	44	2C	39	3.151	2.9932	153	99	87	0.7053	4.3476	222	DE
-8	21.75	0.8885	45	2D	40	3.041	3.0358	155	9B	88	0.6861	4.3631	223	DF
-7	20.74	0.9237	47	2F	41	2.936	3.0775	157	9D	89	0.6676	4.3781	223	DF
-6	19.79	0.9596	49	31	42	2.835	3.1188	159	9F	90	0.6496	4.3929	224	E0
-5	18.88	0.9966	51	33	43	2.739	3.1590	161	A1	91	0.6323	4.4071	225	E1
-4	18.02	1.0343	53	35	44	2.646	3.1990	163	A3	92	0.6156	4.4209	225	E1
-3	17.2	1.0731	55	37	45	2.556	3.2387	165	A5	93	0.5993	4.4345	226	E2
-2	16.43	1.1122	57	39	46	2.471	3.2771	167	A7	94	0.5836	4.4477	227	E3
-1	15.7	1.1520	59	3B	47	2.388	3.3155	169	A9	95	0.5683	4.4606	227	E3
0	15	1.1929	61	3D	48	2.309	3.3528	171	AB	96	0.5535	4.4732	228	E4
1	14.34	1.2342	63	3F	49	2.233	3.3896	173	AD	97	0.5391	4.4855	229	E5
2	13.71	1.2765	65	41	50	2.159	3.4262	175	AF	98	0.5251	4.4975	229	E5
3	13.11	1.3195	67	43	51	2.089	3.4615	177	B1	99	0.5115	4.5093	230	E6
4	12.55	1.3623	69	45	52	2.021	3.4965	178	B2	100	0.4983	4.5207	231	E7
5	12.01	1.4063	72	48	53	1.956	3.5306	180	B4	101	0.4855	4.5319	231	E7
6	11.5	1.4506	74	4A	54	1.893	3.5644	182	B6	102	0.4731	4.5427	232	E8
7	11.01	1.4959	76	4C	55	1.832	3.5977	183	B7	103	0.461	4.5534	232	E8
8	10.55	1.5410	79	4F	56	1.774	3.6299	185	B9	104	0.4492	4.5638	233	E9
9	10.1	1.5878	81	51	57	1.718	3.6616	187	BB	105	0.4378	4.5739	233	E9
10	9.684	1.6338	83	53	58	1.664	3.6926	188	BC	106	0.4268	4.5838	234	EA
11	9.284	1.6805	86	56	59	1.612	3.7231	190	BE	107	0.416	4.5934	234	EA
12	8.903	1.7276	88	58	60	1.562	3.7528	191	BF	108	0.4055	4.6029	235	EB
13	8.54	1.7749	91	5B	61	1.513	3.7824	193	C1	109	0.3953	4.6121	235	EB
14	8.194	1.8226	93	5D	62	1.467	3.8106	194	C2	110	0.3854	4.6211	236	EC
15	7.864	1.8704	95	5F	63	1.422	3.8386	196	C4					
16	7.549	1.9185	98	62	64	1.379	3.8658	197	C5					
17	7.249	1.9667	100	64	65	1.337	3.8927	199	C7					

5. CONTROL MODE

5-1. Major general technical parameters

5-1-1 Conditionings for operation: Ambient temperatures: (-7℃ - +43 ℃),

5-1-2 Remote receiver distance（front of the air conditioner）: 8 m.

5-1-3 Remote receiver angle: Less than 60 degrees.

5-1-4 Temperature control accuracy: ±1℃.

5-1-5 Time error: Less than 1%.

5-2. Functions of the controller

5-2-1 Display panel

I. Control functions of the remote controller (See operating and installation manual)

II. Display of the indoor unit

Information on the screen:

Displaying Scheme:

7-segment tube：Display set temperature or indoor temperature , and display fault code in trouble indicating. An error code is displayed according to the signal from the indoor CPU. The error code will flash for 5 seconds while displayed.

Running LED：It is on during operation. It is flashing when the unit defrost.

TIMER LED：When the timer mode works, the LED will be lighted.

Sleep LED：When the sleep mode works, the LED will be lighted, and after 10s, the LED will be off.

Compressor LED：It lights up when compressor is running.

Remote control receiver： This section receives signals from the remote control.

5-3. Control function

5-3-1 Emergency switch

If the appliance under the Stand-by state, all the Operation Mode, Air volume, Temperature Setting , Forced Cooling function will be restored as the last time setting when you press on the “ON/OFF” button, but lost the Air flow direction setting.

If the appliance was connected to the power at first time, it would operate in the auto mode, It will keep in stand-by state if you press the “ON/OFF” button during the normal operation.

When the appliance under the Stand-by state, press and hold the emergency switch for 5 seconds, the buzzer rings for 1 times, and it will operate

in cooling mode, and the indoor fan speed is set to high-speed, it running has nothing to do with the room temperature.

When press the emergency switch or receive the signal of the remote control, it will exit this mode, and it will operate with the corresponding order.

5-3-2 Operator-machine communication

If the unit has I feel function, when the I feel function is set by the remote control, the room temperature will depend on the remote control and it will be detected by the sensor of the remote control. Normally the remote control will automatically transmits a signal at an interval of 10 minutes（only for H1 remote control, it is 9 minutes）, but if the room temperature changed exceed 1℃ in a short period of time, the remote control will transmits a signal within 2 minutes. If the indoor unit has not received a remote signal within 30 minutes, the room temperature will depend on the room temperature sensor of indoor unit.

5-3-3 Timer function

Real time of Timer setting

(1) The max Timer ranges is 24 hours.

(2) Timer ON/OFF

(3) Timer ON/OFF can be set available in turn.

(4) The Timer accurate more than 97%

(5) The Timer can be adjusted by 1 min increase.

(6) The appliance can be set the ON-Timer and OFF-Timer in the same time, but no any timer setting indicated.

5-3-4 Sleep

(1)The Sleep mode can only be set during Cool, Heat and Dry mode.

（2）When the appliance run in the Sleep mode, it will stop after 8 hours operation, then it will cancel the Sleep setting. When the appliance operate under the OFF-Timer setting condition, if the OFF-Timer setting less than 8 hours, it will keep the Sleep mode till the OFF-Timer setting; if the OFF-Timer setting more than 8 hours, it will cancel the OFF-Timer setting after the Sleep mode OFF.

（3）When the Sleep mode is select with Cooling mode, if the room temperature not less than 26℃, the setting temperature will not be adjusted, otherwise, the setting temperature will be raised by 1℃ per hour, but the max setting temperature raise is 1℃.

（4）When the Sleep mode is select with Heat mode, the setting temperature will be decreased by 1℃ per hour during the successive 3 hour, but

the max setting temperature decrease is 3℃.

（5）When the appliance operate with Sleep mode, the indoor fan run in the LOW setting, and the air flow direction same as the last setting and the temperature and air flow direction can be adjusted by user. The Running indicator will be flashed 10 times per 1 Hz frequency, then all the indicators turn OFF except the Sleep light after 5 min elapse. Those indicators will be recovery when the temperature or Time setting is adjusted, after the setting, the indicators will be lit in 10 sec, then turn OFF.

5-3-5 Automatic run (SMART) mode

When the appliance operates at the smart, the air flow direction can be adjusted.

(1) H/C appliance

a. When the setting temperature is 26℃, the appliance will be ran in the Cool if the room temperature exceeds 26℃.

b. When the room temperature exceeds 23℃, but below 26℃, it will be ran in the Dry mode(It will turn in Automatic setting After 3 min LOW air volume running.).

c. When the room temperature exceeds 21℃, but below 23℃, it will be operated in the Fan only, the air volume is set by LOW and the fan speed can be adjusted

d. When the room temperature is not more than 21℃, it will be operated in Heat mode, and the temperature is set to 22℃.

(2) Cool only appliance

a. When the room temperature exceeds 26℃, it will be ran in Cool mode, and the temperature is set to 26℃.

b. When the room temperature exceeds 23℃, but not more than 26℃, it will be operated in the Dry mode.

c. When the room temperature is not more than 23℃, it will be operated in the Fan only, the air volume is set to LOW and the fan speed can be adjusted

After the appliance start the smart operation, the setting temperature can be adjusted 2℃ or 7℃ (based on the remote mode)(the min accuracy is 1℃) up and down base on the automatic temperature setting, also the presetting temperature of PCB circuit.

<u>In case of the specific operation selected, it could be re-select the other modes after the compressor ceased for 5 min or the setting temperature changed.</u>

5-3-7 Cooling-run mode

4-3-7-1 Outdoor Fan

The outdoor fan's speeds except the single speed motor can be changed according to outdoor ambient temperatures.

When operating at a fixed frequency, the outdoor fan is forced to operate at the high speed.

4-3-7-2 Indoor fan operation

(1）When the indoor fan keep in running condition, this operation state could be controlled by the remote control with High, Median, Low and Automatic setting.

(2） When the appliance is set Automatic condition in the Cool mode for the first time, the fan speed will run at Low setting. After that, temperature and fan speed is shown as following.

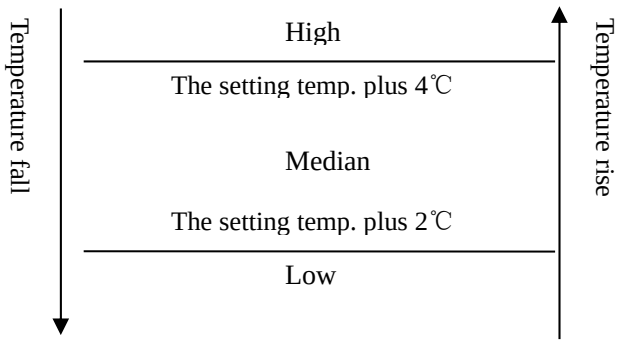

When the difference between the setting temperature and the room temperature equal to 2℃ or 4℃, the indoor fan speed will keep in current speed.

4-3-7-3 Air flow direction control

The louver is derived by a step motor, and it swings the horizontal louver automatically. Press the SWING button to swing or stop the louver.

During the louver swing in normal operation, the current position will be stored. When the appliance turn off and louver swing automatically to the default position, it will position at the close position plus 5º.

4-3-7-4 4-way valve

State: It is interrupted in cooling.

Switchover: When initially powered on for cooling, the 4-way valve is interrupted immediately.

When the heating is changed to the cooling, it needs an interval of 50 seconds

for the 4-way valve to change over from being activated to being interrupted.

5-3-8 Heating-run mode

4-3-8-1 Temperature compensation

The temperature compensation is 5º in heating mode. For example, if the set temperature is 25℃ by the remote control, when the room temperature is detected with 31℃, the compressor will turn off. The main reason is that the hot air is condensed at the top of the house.

Note: The compensation is available only if the room temperature sensor of indoor unit is used and it is not available when it is subject to the sensor on the remote control.

4-3-8-2 Indoor fan motor operation

Anti-cold air system:

When the appliance run in Heat mode condition, the indoor fan motor operation is shown as following to prevent the cooling air come out during the appliance operation.

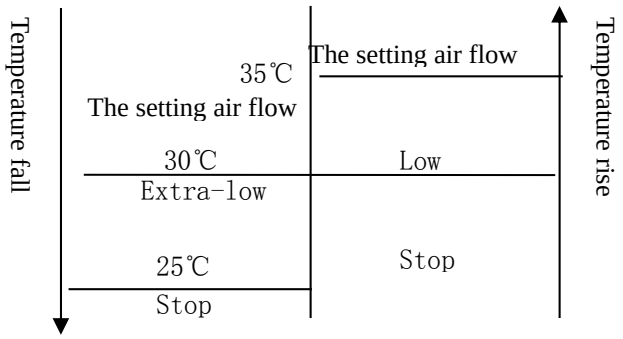

When the appliance turn in the anti-cold air system in the Extra-LOW (Tapped motor set in LOW, sic passim) during the compressor operation, the louver swang to the Cool air protection position, the louver recovers to the original position after the air volume change to LOW. When the room temperature reach to the setting temperature, the compressor will be turn off, and the air flow change to LOW, the louver swang to the Cool air protective position to prevent the air drop into human body directly; when the indoor pipe coil temperature drop continuously, it will turn in the Cooling air protective system in the Extra-LOW or stop the fan motor.

The indoor fan motor is only controlled by the signal of indoor pipe coil temperature, no matter the compressor turn ON/OFF, even the appliance turn in Heat mode at first time.

The indoor fan motor will operate according to the different setting(High,

Median, Low and Automatic) by the remote control, but the anti-cold air system is prior.

When the appliance run in the Heat mode with the Automatic setting at first time, the fan speed will be in the LOW setting, and the operation diagram is shown as following

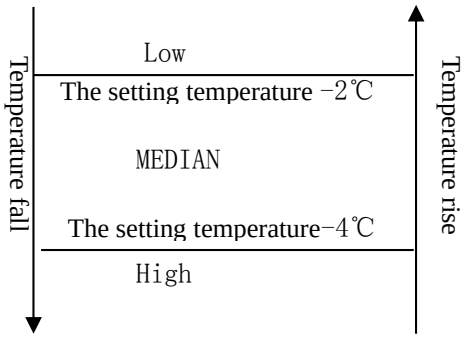

When the difference between the setting temperature and the room temperature equal to 2℃ or 4℃, the indoor fan speed will keep in current speed.

5-3-8-3 Air flow direction control

The horizontal louver is controlled by a step motor, press the SWING button to swing or stop the louver.

During the louver run in normal operation, the current position will be stored. When the appliance turn off and louver swing automatically to the default position, it will position at the default position plus 5º.

4-3-8-4 Outdoor fan

The outdoor fan speeds except single speed motor can be changed according to outdoor ambient temperatures.

4-3-8-6 4-way valve

State: It is electrified in heating.

Switchover: When initially powered on for heating, the 4-way valve is activated immediately.

In the change from cooling to heating, it needs an interval of 50 seconds for the 4-way valve to change over from being interrupted to being activated.

5-3-9 The super function (option)

In cooling mode, when you press the SUPER button by remote control, the unit will operate for 15 minutes with the following setting:

a. The set temperature is 18℃;

b. The fan speed with highest speed;
c. The compressor runs with high frequency.

5-3-10 Dehumidifying mode

The dehumidifying mode is illustrated as follows:

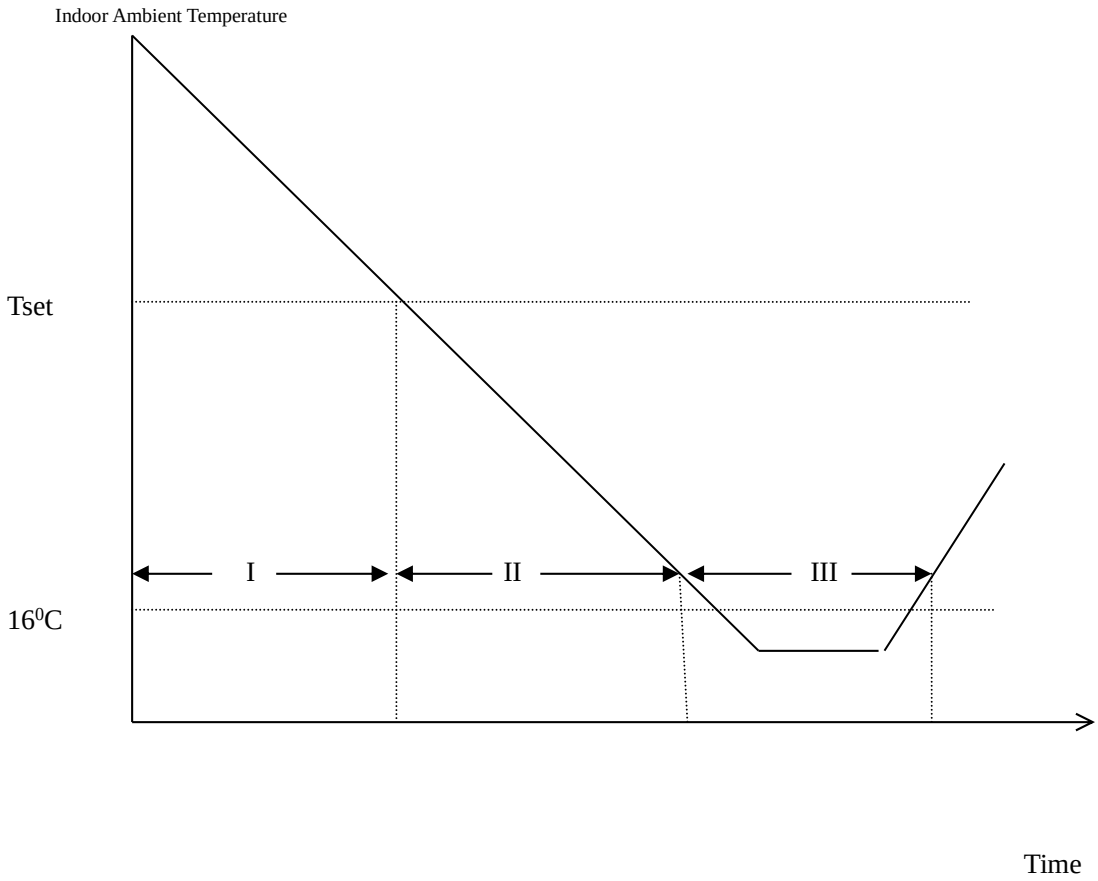

Dehumidifying area I: Operation at the frequency in the range (30–60Hz) according to Δt ($T_{indoor\ ambient}$-T_{set}).

Δt(℃)	f(Hz)
0	30
0.5	30
1	40
1.5	50
≥2	60

Dehumidifying area II: The compressor stops for 5 minutes and operators for 5 minutes at the lowest frequency.
Dehumidifying area III: The compressor stops.

5-3-10 Fan Only Mode Operation

During the appliance run in this mode, the compressor and outdoor fan stop, the indoor fan operate under the pre-setting of air volume, and the louver swing, and the indoor fan speed same as the Heating Mode.

7. TROUBLE SHOOTING

1.Indication on the outdoor unit:

When the unit has the following trouble and the compressor stops running, The LED of outdoor control board will show the error sequence automatically:

NOTE: ★: *LIGHT* O: *FLASH* ×: *OFF*

	Outdoor Failure Description	**LED1**	**LED2**	**LED3**	**the root cause my be one of the following**
	Normal	×	×	×	
	Outdoor coil temperature sensor in trouble	★	×	★	**a.**the outdoor coil sensor connect loose; **b.**the outdoor coil temperature sensor is failure; **c.**the outdoor control board is failure
	Compressor exhaust temperature sensor in trouble	★	×	×	**a.**the compressor exhaust temperature sensor connect loose; **b.**the compressor exhaust temperature sensor is failure; **c.**the outdoor control board is failure
	Communication failure between the indoor unit and outdoor unit	×	×	O	**a.**the communication cable connect loose; **b.**the communication cable is failure; **c.**the connection between the filter board and the outdoor control board is incorrect or loose; **d.**the connection between the filter board and the terminal is incorrect or loose; **e.**the indoor control board is failure; **f.**the PFC board is failure; **g.**the power board is failure; **h.**the outdoor control board is failure.
	Current overload protection	★	O	×	**a.**the fan motor run abnormally; **b.**the condensor and evaporator is dirty; **c.**the air inlet and outlet is abnormally
	Maximum current protection	★	O	★	**a.**the outdoor control board is short circuit; **b.**the drive board is short circuit; **c.**the other components is short circuit

7. TROUBLE SHOOTING

	Communication trouble between outdoor unit and driver	×	★	★	**a.** the connection wires connect loose **b.**the outdoor board or drive board is failure;
	Outdoor EEPROM in trouble	★	★	★	**a.**the EEPROM chip is loose; **b.**the EEPROM chip inserted with opposite direction; **c.**the EEPROM chip is failure
	Compressor exhaust temperature too high protection	×	O	★	**a.**the compressor exhaust temperature sensor is failure; **b.**the refrigerant of the unit is not enough
	Outdoor ambient temperature sensor in trouble	★	★	×	**a.**the outdoor ambient temperature sensor connect loose; **b.**the outdoor ambient temperature sensor is failure; **c.**the outdoor control board is failure
	Compressor shell temperature too high protection	×	★	O	**a.**the compressor exhaust temperature sensor connect loose **b.**the refrigerant of the unit is not enough
	Anti-freeze protection with cooling or overload protection with heating in indoor unit	×	O	O	**a.**the indoor coil temperature sensor connect loose; **b.**the indoor coil temperature sensor is failure; **c.**the indoor control board is failure **d.** the refrigerant system is abnormal.
	Compressor drive in trouble	O	×	O	**a.**the outdoor drive board is failure; **b.**the compressor is failure **c.** the outdoor control board is failure
	Outdoor fan motor locked rotor protection	O	O	★	**a.**the connection of the outdoor fan motor is loose; **b.**there are something block the outdoor fan; **c.**the fan motor is failure; **d.**the outdoor control board is failure

7. TROUBLE SHOOTING

	Outdoor coil anti-overload protection with cooling	×	★	×	**a.**the refrigerant is too much; **b.**the outdoor fan motor is failure; **c.**the outdoor fan is broken; **d.**the condensor is dirty; **e.**the air inlet and air outlet of the indoor unit and the outdoor unit is not normally
	IPM module protection	×	O	×	**a.**The IPM board is failure; **b.**The outdoor fan is broken; **c.**The outdoor fan motor is failure; **d.**The outdoor fan has been blocked ; **e.**The condenser is dirty; **f.**The outdoor unit has been installed without standard.
	PFC protection	O	×	×	**a.**the PFC is failure; **b.**the outdoor drive board is failure
	Compressor pre heating process	O	★	O	it is normal mode in cold weather
	Chip in outdoor board in trouble	★	×	O	a. Using the wrong drive board; b. Using the wrong compressor.
	AC voltage higher or lower protection	★	★	O	**a.**the supply voltage is higher or lower than normal; **b.**the inner supply voltage of the unit is higher or lower than normal
	DC compressor start failure	O	O	×	**a.**the outdoor drive board is failure; **b.**the compressor is failure

7. TROUBLE SHOOTING

2.Indication by the indoor unit:

2.1 The 7-segment tube of the indoor display board will show the error code automatically when the unit has the following trouble:

Error code	description	the root cause is may be one of the following:
E4	Indoor fan motor running in trouble	**a.** the connection of the indoor fan motor is loose; **b.**there are something block the indoor fan; **c.**the fan motor is failure; **d.**the indoor control board is failure
EA/ER	Communication trouble in the indoor unit between the display board and control board	**a.**the connection between the display board and the indoor control baord is loose; **b.**the indoor control board is failure **c.**the wiring of the display board is failure

2.2. When the unit has the following trouble and the compressor stops running, press the sleep button on the remote controller for 4 times in ten seconds and the 7-segment tube of the display board will show the error code as the following, if two malfunction happened at the same time, it need press the sleep button for 4 times again, the LED will show the other error code.

Refer to the remote controller which the sleep key can set into 4 different combination ways (Hisense's new design remote controller), when using to check the error codes only takes effect for pressing the sleep key 10 times in ten seconds instead of 4 times.

NOTE: If the troubleshooting inquiry display by 7-segment tube, then the error code will be displayed, otherwise only the LED of the display board can show.

Error code	description	the root cause is may be one of the following:
1	Outdoor coil temperature sensor in trouble	**a.**the outdoor coil sensor connect loose; **b.**the outdoor coil temperature sensor is failure; **c.**the outdoor control board is failure
2	Compressor exhaust temperature sensor in trouble	**a.**the compressor exhaust temperature sensor connect loose; **b.**the compressor exhaust temperature sensor is failure; **c.**the outdoor control board is failure
5	IPM module protection	**a.**The IPM board is failure; **b.**The outdoor fan is broken; **c.**The outdoor fan motor is failure; **d.**The outdoor fan has been blocked ; **e.**The condenser is dirty; **f.**The outdoor unit has been installed without standard.
6	AC voltage higher or lower protection	**a.**the supply voltage is higher or lower than normal; **b.**the inner supply voltage of the unit is higher or lower than normal

7. TROUBLE SHOOTING

7	Communication failure between the indoor unit and outdoor unit	**a.**the communication cable connect loose; **b.**the communication cable is failure; **c.**the connection between the filter board and the outdoor control board is incorrect or loose; **d.**the connection between the filter board and the terminal is incorrect or loose; **e.**the indoor control board is failure; **f.**the PFC board is failure; **g.**the power board is failure; **h.**the outdoor control board is failure.
8	Current overload protection	**a.**the fan motor run abnormally; **b.**the condensor and evaporator is dirty; **c.**the air inlet and outlet is abnormally; **d.**Out control board is failure; **e.**Compressor is failure
10	communication in trouble between two chips (control and driver) on outdoor PCB.	**a.** the connection wires connect loose **b.**the outdoor board or drive board is failure;
11	Outdoor EEPROM in trouble	**a.**the EEPROM chip is loose; **b.**the EEPROM chip inserted with opposite direction; **c.**the EEPROM chip is failure
12	Protection for the lower outdoor ambient temperature.	**a.**It is normally protection for the unit when the outdoor ambient temperature is lower than minus 15 degrees; **b.**The outdoor ambient temperature sensor is failure; **c.**The outdoor control board is failure.
13	Compressor exhaust temperature too high protection	**a.**the compressor exhaust temperature sensor is failure; **b.**the refrigerant of the unit is not enough
14	Outdoor ambient temperature sensor in trouble	**a.**the outdoor ambient temperature sensor connect loose; **b.**the outdoor ambient temperature sensor is failure; **c.**the outdoor control board is failure
15	Compressor shell temperature too high protection	**a.**the compressor exhaust temperature sensor connect loose **b.**the refrigerant of the unit is not enough
16	Anti-freeze protection with cooling or overload protection with heating in indoor unit	**a.**it is normal protection; **b.**the indoor coil temperature sensor connect loose; **c.**the indoor coil temperature sensor is failure; **d.**the indoor control board is failure; **e.** the refrigerant system is abnormal
17	PFC protection	**a.**the PFC is failure; **b.**the outdoor drive board is failure
18	DC compressor start failure	**a.**the compressor power cord connect loose or incorrect; **b.**the outdoor drive board(IPM) is failure; **c.** the outdoor control board is failure

		d.the compressor is failure
19	Compressor drive in trouble	**a.**the compressor power cord connect loose or incorrect; **b.**the outdoor drive board(IPM) is failure; **c.** the outdoor control board is failure **d.**the compressor is failure
20	Locked rotor protection for outdoor fan motor	**a.**the connection of the outdoor fan motor is loose; **b.**there are something block the outdoor fan; **c.**the fan motor is failure; **d.**the outdoor control board is failure
21	Outdoor coil anti-overload protection with cooling	**a.**the refrigerant is too much; **b.**the outdoor fan motor is failure; **c.**the outdoor fan is broken; **d.**the condensor is dirty; **e.**the air inlet and air outlet of the indoor unit and the outdoor unit is not normally
33	Indoor ambient temperature sensor in trouble	**a.**the indoor ambient temperature sensor connect loose; **b.**the indoor ambient temperature sensor is failure; **c.**the indoor control board is failure
34	Indoor coil temperature sensor in trouble	**a.**the indoor coil temperature sensor connect loose; **b.**the indoor coil temperature sensor is failure; **c.**the indoor control board is failure
36	Communication in trouble between the outdoor unit and indoor unit	**a.**the communication cable connect loose; **b.**the communication cable is failure; **c.**the connection between the filter board and the outdoor control board is incorrect or loose; **d.**the connection between the filter board and the terminal is incorrect or loose; **e.**the indoor control board is failure; **f.**the PFC board is failure; **g.**the power board is failure; **h.**the outdoor control board is failure.
38	Indoor EPROM in trouble	**a.**the EEPROM chip is loose; **b.**the EEPROM inserted with opposite direction; **c.**the EEPROM chip is failure,you should change the indoor control board.
39	Indoor fan motor running in trouble	**a.**the connection of the indoor fan motor is loose; **b.**there are something block the indoor fan; **c.**the fan motor is failure; **d.**the indoor control board is failure
41	Indoor unit detecting failures by zero-crossing	the indoor control board is failure

Note:

7. TROUBLE SHOOTING

● If indoor unit could not receive the signal from outdoor unit in 12 minutes consecutively, then power to outdoor unit would be cut 1 minute later; after that, 3 minutes later, indoor unit would try to power the outdoor unit again; this procedure which were mentioned before would be done 3 times. If eoutdoor unit could not power, then error code 36 could be shown after “sleep” is pressed 4 times.

6 TROUBLE SHOOTING

6-1. Service flow chart

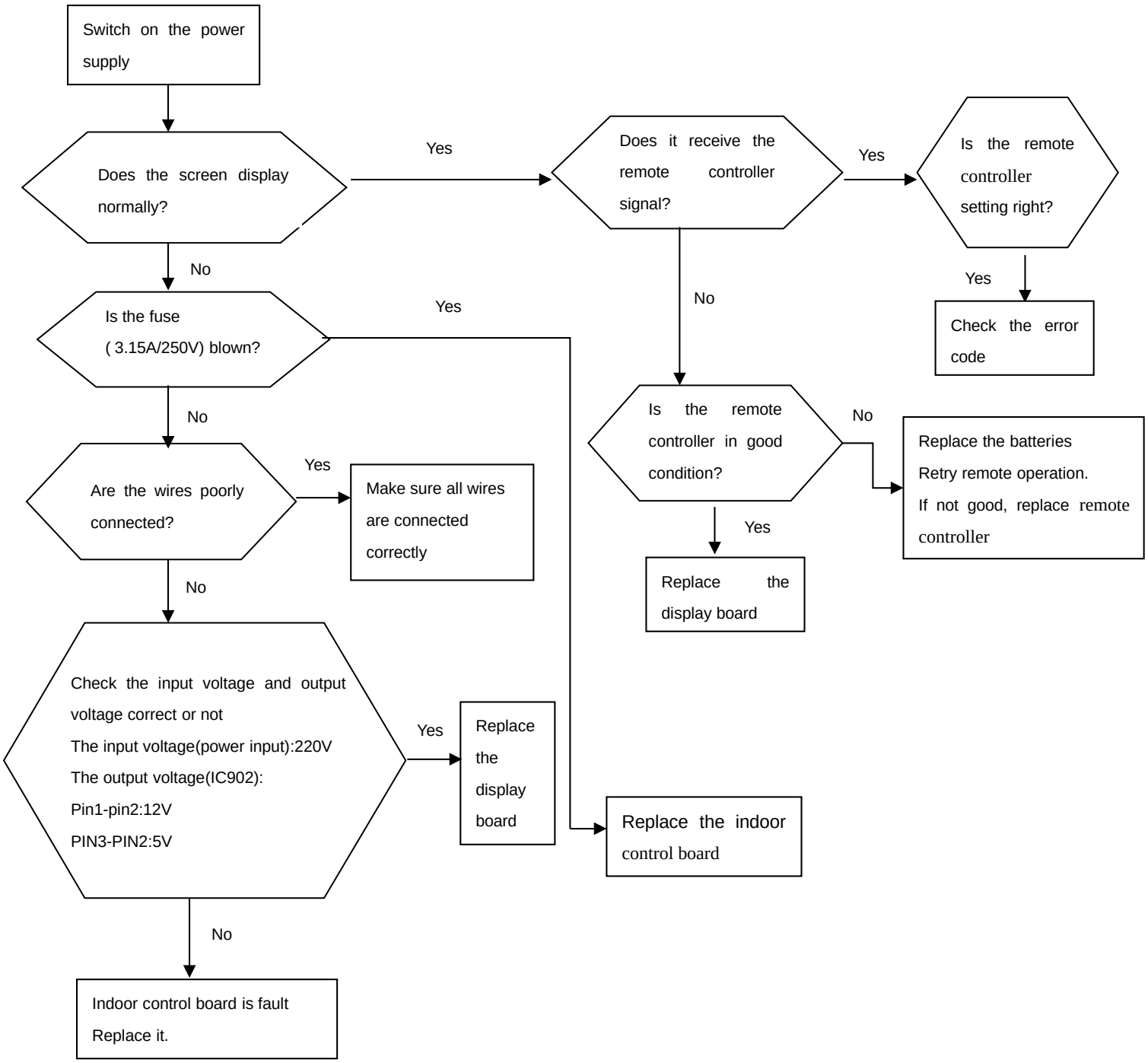

6 TROUBLE SHOOTING

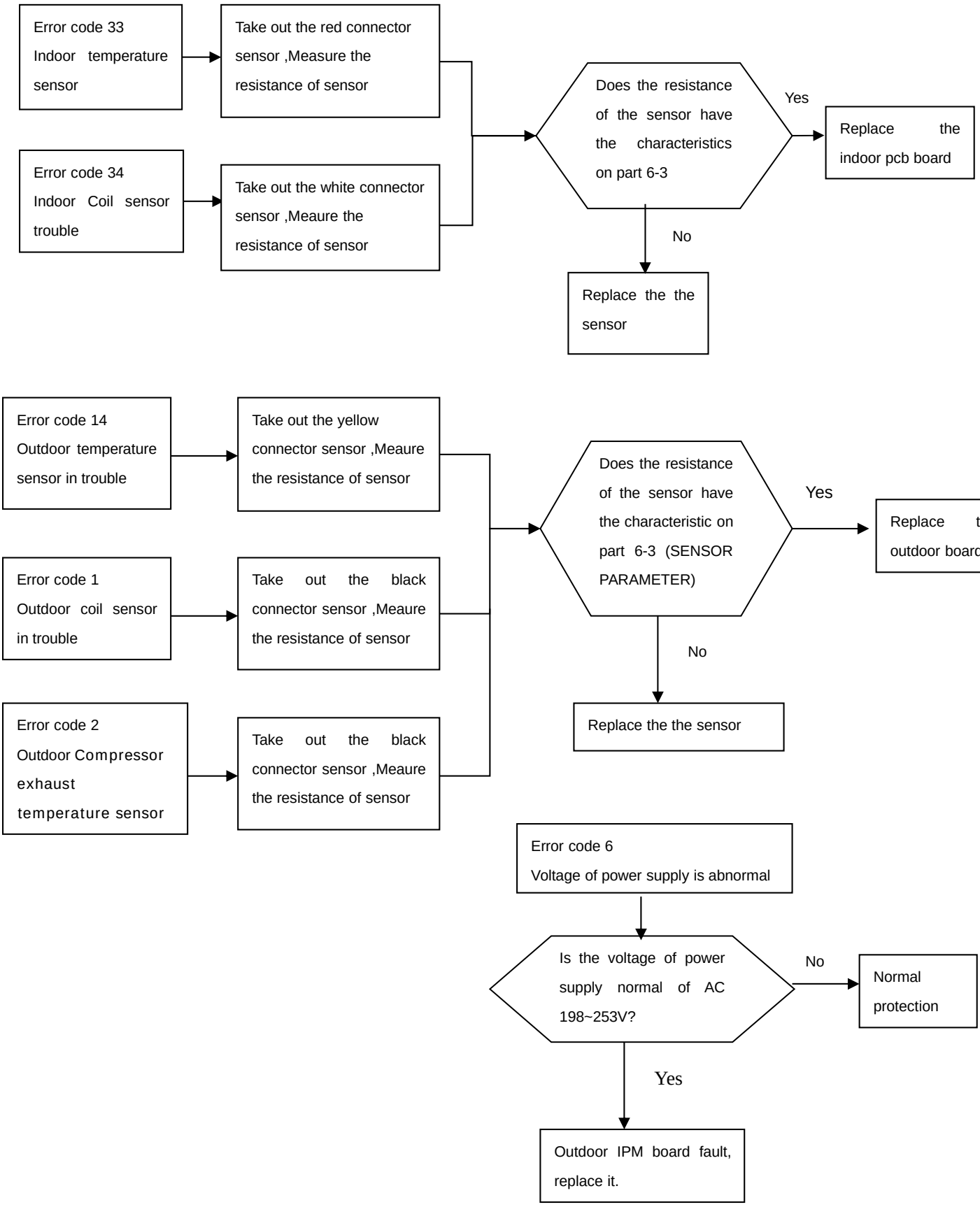

6. TROUBLE SHOOTING

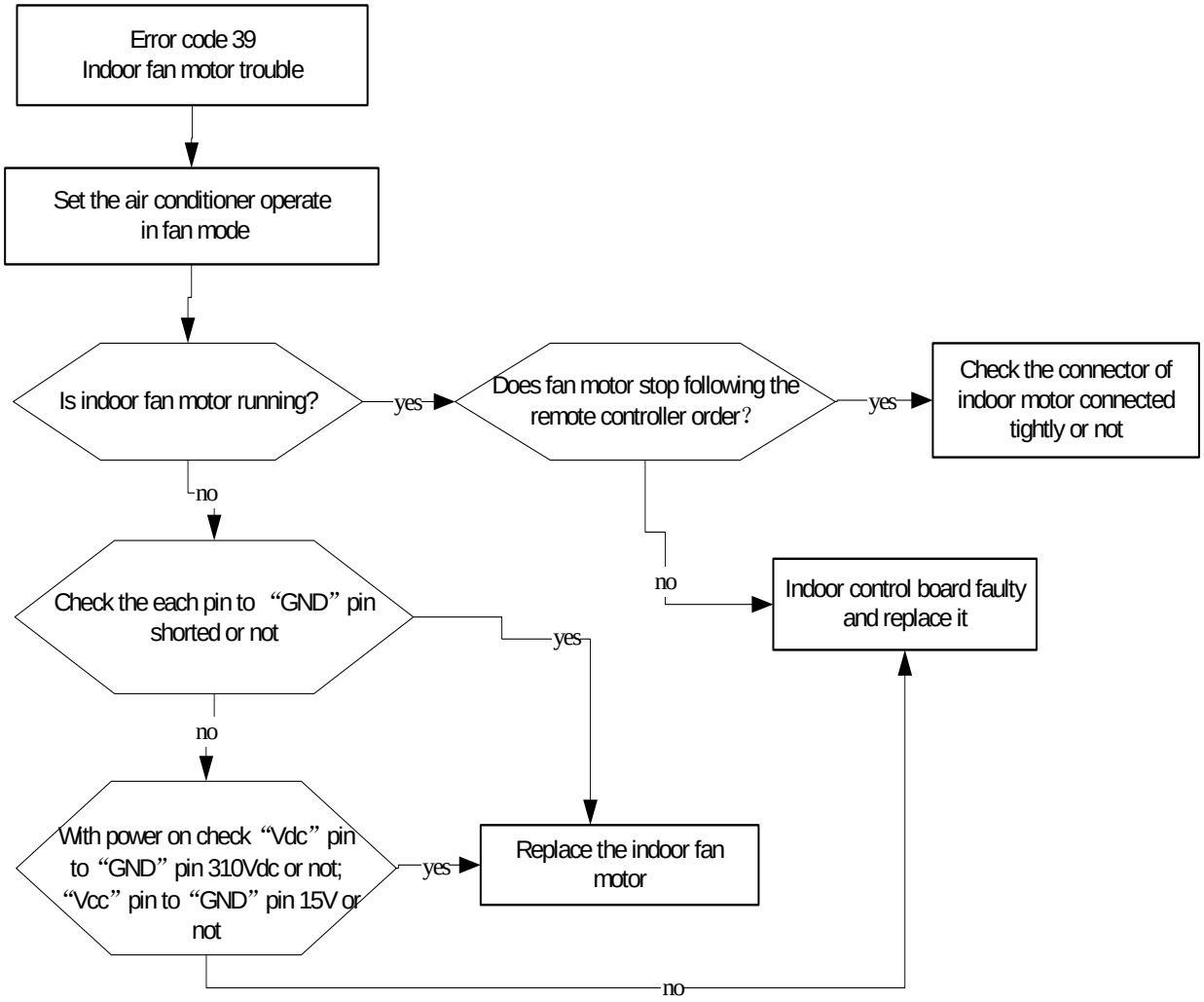

6. TROUBLE SHOOTING

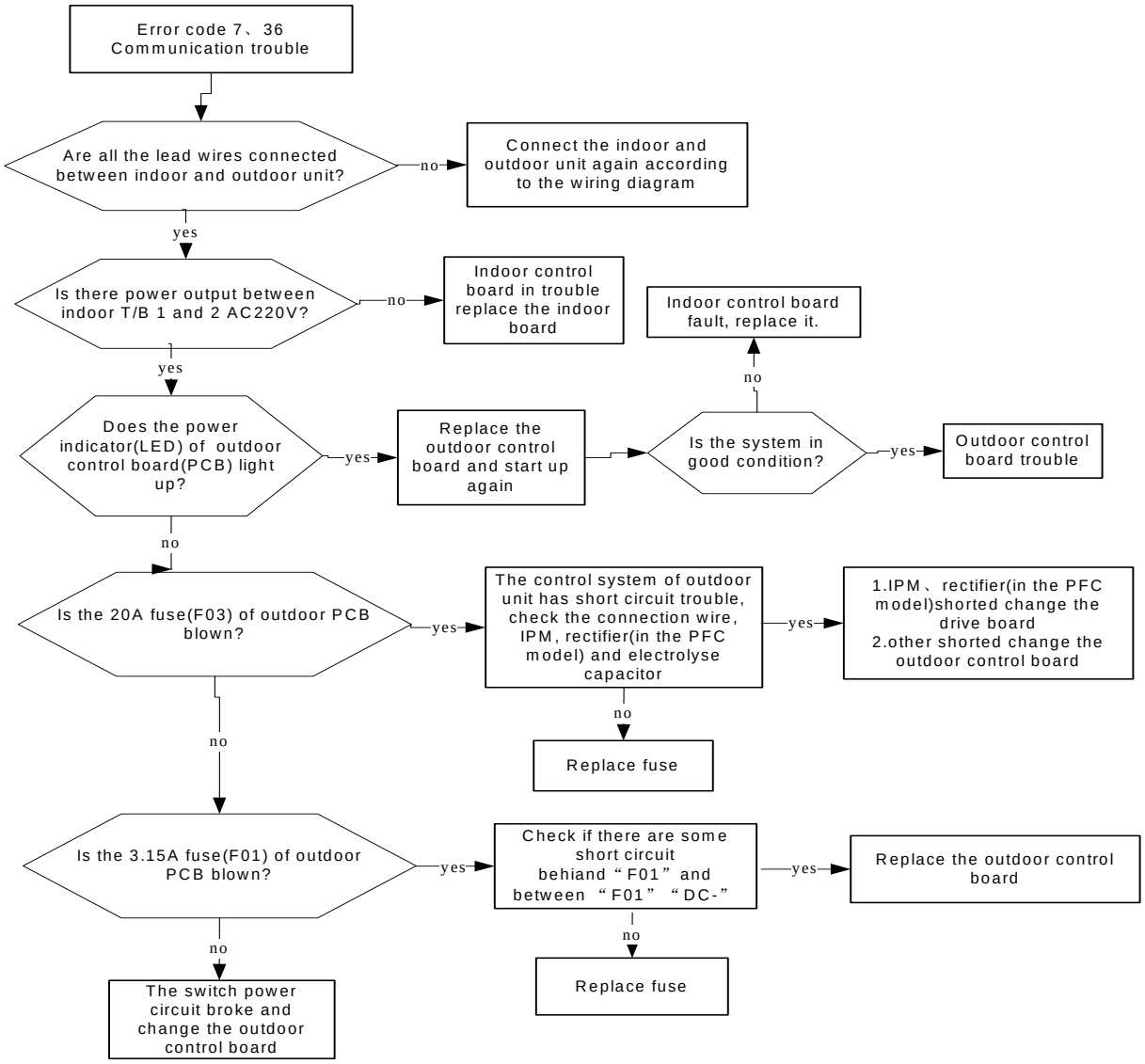

6. TROUBLE SHOOTING

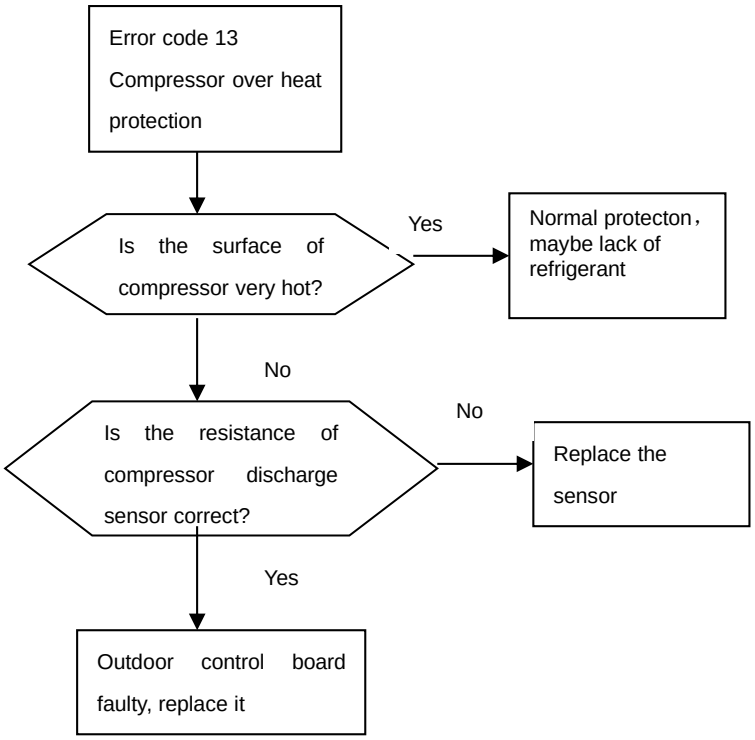

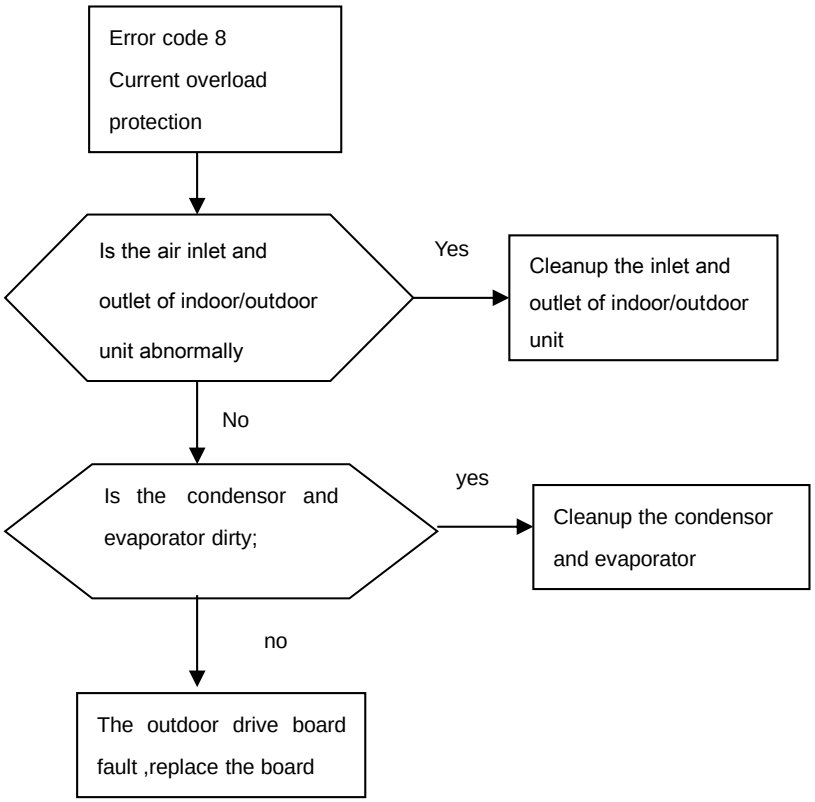

6. TROUBLE SHOOTING

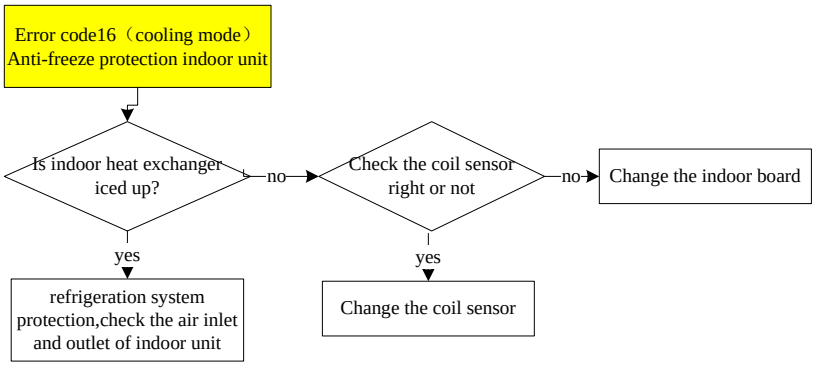

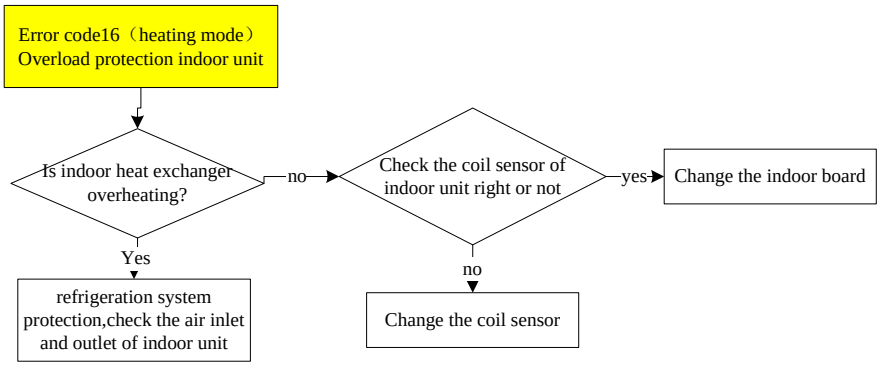

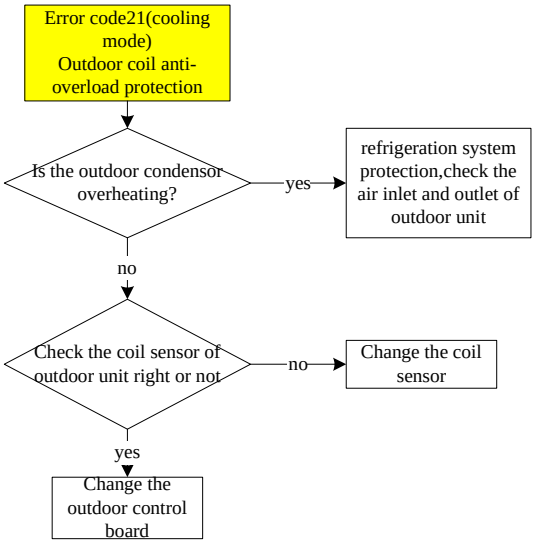

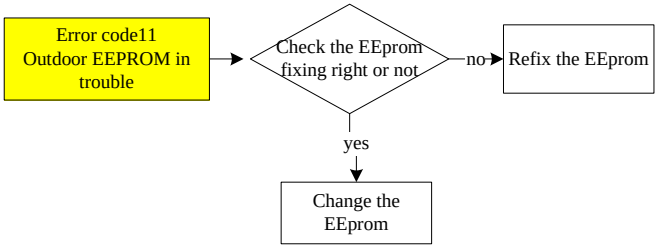

6. TROUBLE SHOOTING

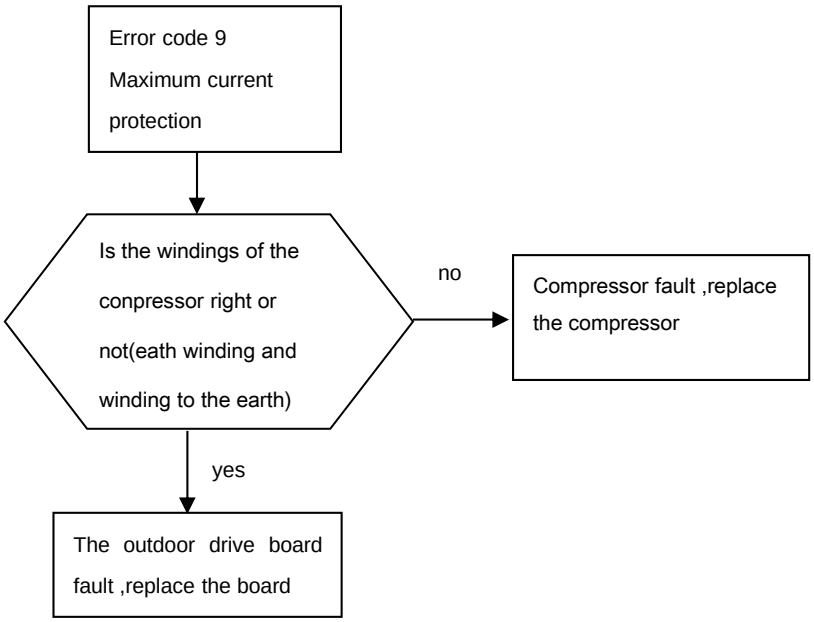

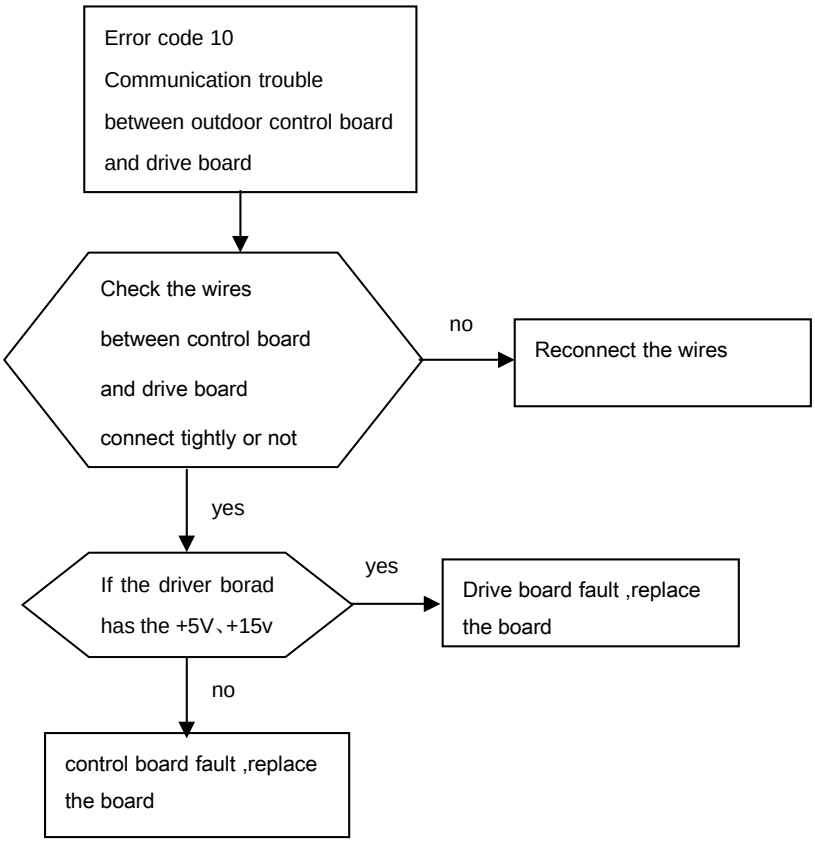

6. TROUBLE SHOOTING

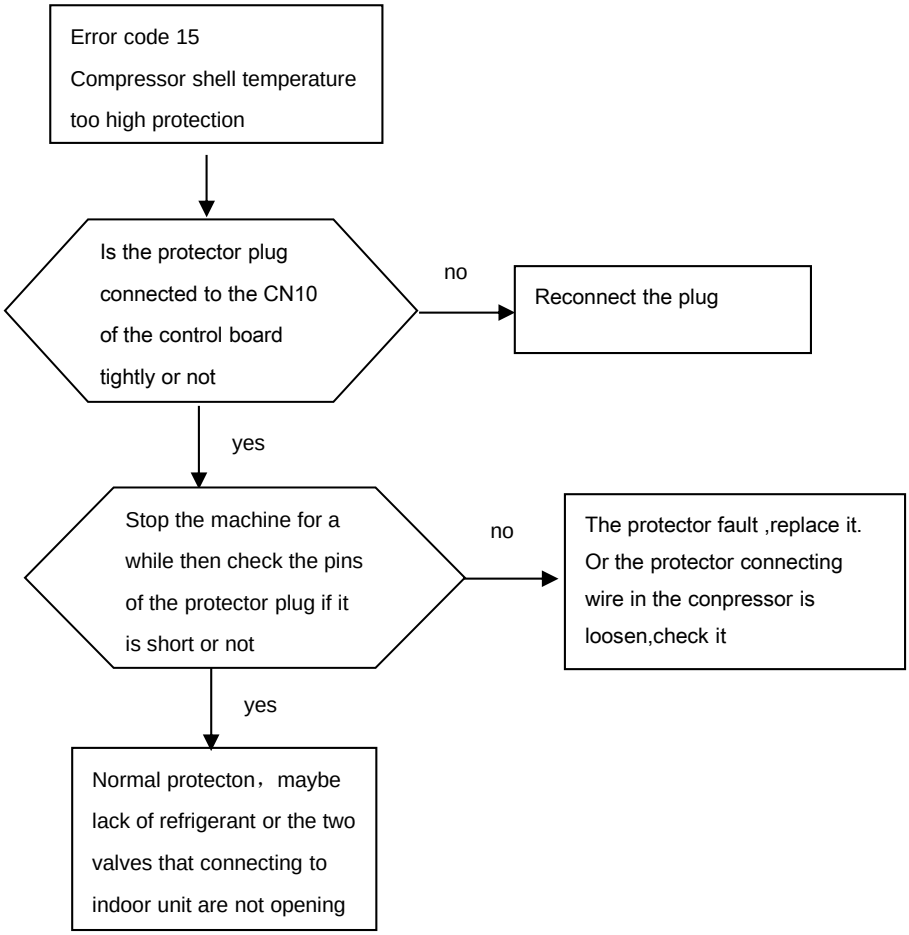

6. TROUBLE SHOOTING

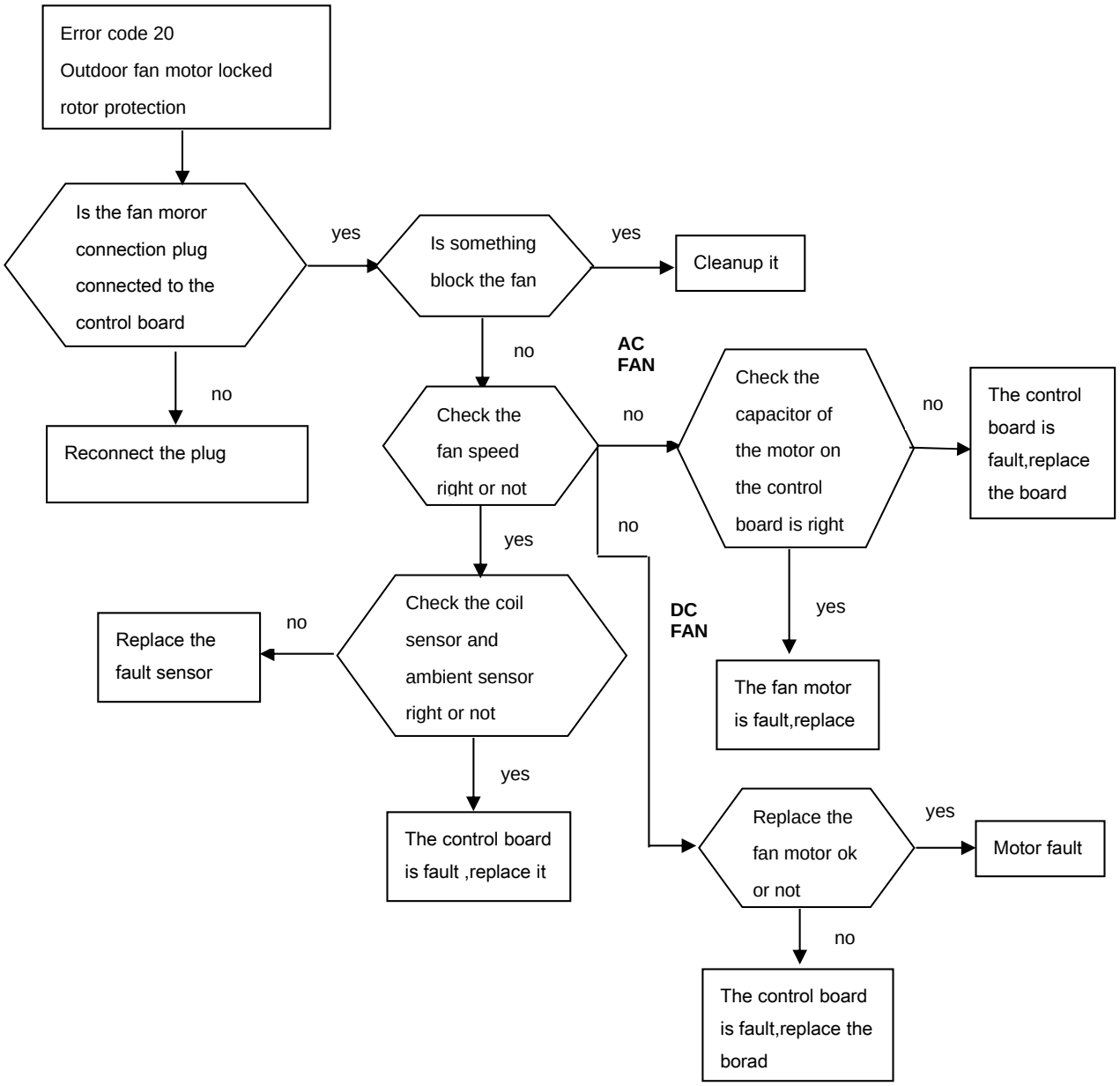
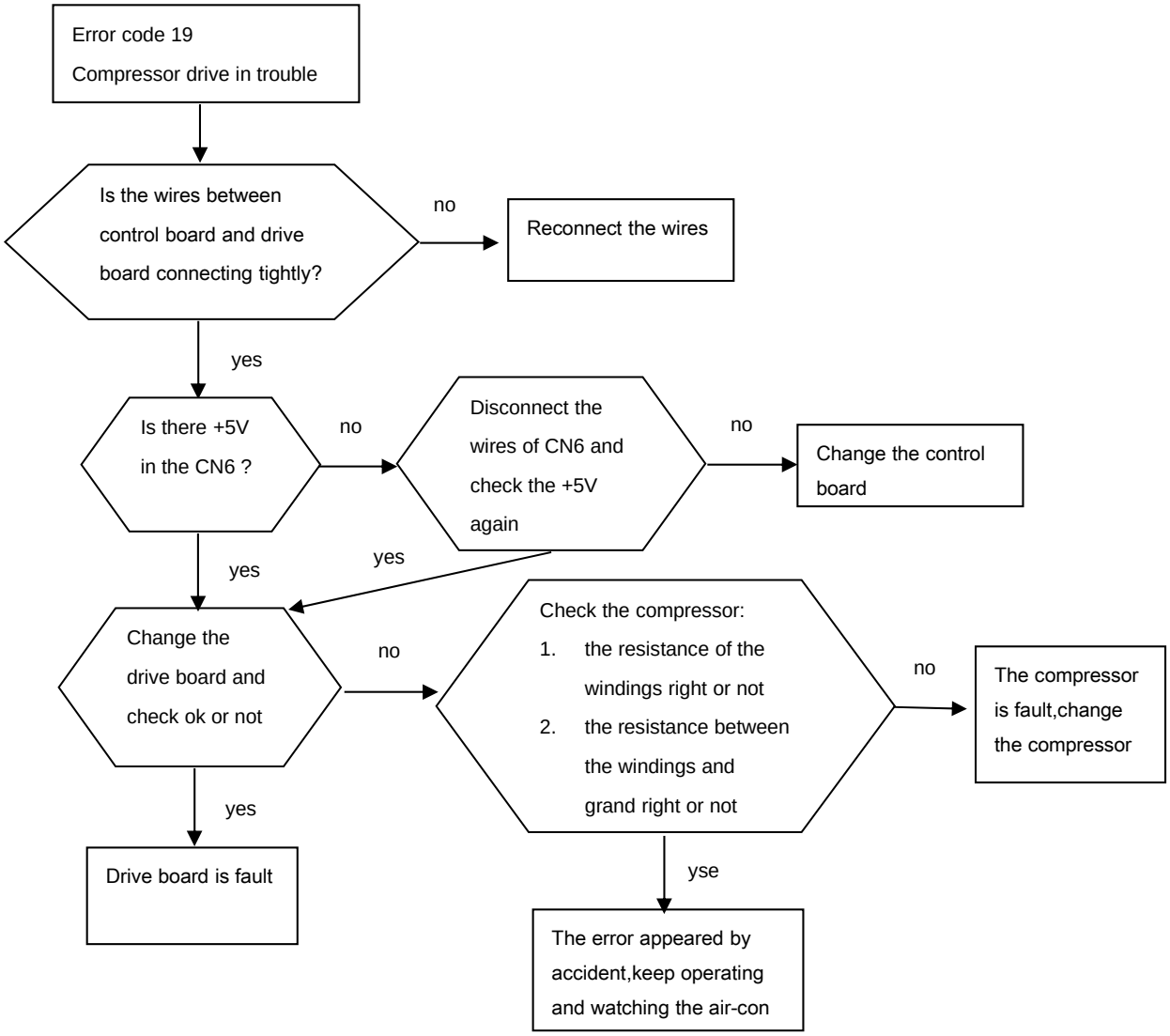
6. TROUBLE SHOOTING