GREE

[CENTRAL AIR CONDITIONERS]

R410A

SUPER FREE MATCH SERIES SERVICE MANUAL

T1/R410A/50Hz
(GC201306 -Ⅰ)

GREE ELECTRIC APPLIANCES INC.OF ZHUHAI

Contents

PRODUCT **2**

1 MODELS LIST **2**
1.1 Outdoor Unit 2
1.2 BU Module 2
1.3 Indoor Unit 3
2 NOMENCLATURE **5**
2.1 Nomenclature of Outdoor Unit 5
2.2 Nomenclature of BU Module 5
2.3 Nomenclature of Indoor Unit 5
3 FUNCTION 6
4 PRODUCT DATA **7**
4.1 Product Data of Outdoor Unit 7
4.2 Product Data of Indoor Unit 8
4.3 Product Data of BU Module 20
5 Working Temperature Range **21**
6 PIPING DIAGRAM **22**

Control **25**

1 OPERATION FLOWCHART **25**
1.1 Cooling/Dry Operation 26
1.2 Heating Operation 27
2 MAIN LOGIC **28**
2.1 Control Function of Outdoor Unit 28
2.2 Protection Function 29
2.3 Other function 30
2.4 Control Function of Indoor Unit 31
3 REMOTE CONTROLLER **34**
3.1 Wired Remote Controller 34
3.2 Wireless Remote Controller YT1F (MOTO) 39
3.3 Wireless Remote Controller YAA1FB1 43
3.4 Wireless Remote Controller YAG1FB 47
3.5 Wireless Remote Controller YB1F2 (XFAN) 53
4 Smart Zone Controller (CE50-24/E) **58**
4.1 General Introduction 58
4.2 Communication Network 59
4.3 LCD 59
4.4 Buttons 60

INSTALLATION **63**

1 PRECAUTIONS FOR INSTALLATION **63**
1.1 Precautions for Installation 63
1.2 Key Points of Installation 65

2 FLOW CHART OF INSTALLATION 67
3 OUTDOOR UNIT INSTALLATION 68
3.1 Precautions for R410A 68
3.2 Precaution for Installation 68
3.3 Names of Main Parts 68
3.4 Parts and Components of Unit 69
3.5 Selection of Installation Location 69
3.6 Outline Dimension of the Outdoor Unit 70
3.7 Installation and Servicing Space 70
3.8 Installation of the Outdoor Unit 71
4 INDOOR UNIT INSTALLATION 72
4.1 Installation of Wall Mounted Type 72
4.2 Installation of Duct Type 75
4.3 Installation of Cassette Type 83
4.4 Installation of Floor Ceiling Type 89
4.5 Installation of Console Type 93
5 BU MODULE INSTALLATION 97
5.1 Precaution for Installation 97
5.2 Names of Main Parts 97
5.3 Combinations for Outdoor and Indoor Units 98
5.4 Selection of Installation Location 98
5.5 Outline Dimension and Servicing Space of FXA2A-K 99
5.6 Outline Dimension and Servicing Space of FXA2B-K 100
5.7 Outline Dimension and Servicing Space of FXA3A-K 101
5.8 Outline Dimension and Servicing Space of FXA3B-K 102
5.9 Installation Instruction 103
6 REFRIGERATION PIPING WORK 104
6.1 Manifold Mode of Connecting Pipe 104
6.2 Allowable Length and Drop Height of Connecting Pipe 105
6.3 Dimension of Connecting Pipe 105
6.4 Connection of Branch Pipe 106
6.5 Design Requirements for Oil Trap 106
6.6 Connection of Outdoor Unit Refrigerant Pipe 108
6.7 Installation of Piping Adapter 108
6.8 Precaution for Connection 111
6.9 Leak Test 112
6.10 Vacuum Operation 112
6.11 Refrigerant Charging 113
7 Electrical Wiring Work 116
7.1 Wiring Connection 116
7.2 Requirements of Power Circuit and Cable 116
7.3 Ground Requirements 117
7.4 Precautions of Electrical Wiring Work 117
7.5 Precaution of Laying Wires 117
7.6 Electrical Wiring Work for Outdoor Unit 118
7.7 Electrical Wiring Work for BU Module 118

7.8 Electrical Wiring Work for Indoor Unit 120
8 INSTALLATION OF DRAINAGE PIPELINE 121
8.1 Material Quality Requirements for Condensate Pipe 121
8.2 Key Points for Condensate Pipe Installation 121
9 Installation of Protective Layer on Connection Pipe 125

MAINTENANCE 127

1 Testing Board Introduction 127
1.1 Compose of Testing Board 127
1.2 Instruction of Function and Data Section 127
1.3 Process Control Setting 128
2 Troubleshooting 130
2.1 Check before Contacting Maintenance Serviceman 131
2.2 Problem Handling 131
2.3 Error description 132
3 FLOW CHART OF TROUBLESHOOTING 134
3.1 Malfunction display: High Pressure Protection 135
3.2 Malfunction display: Low Pressure Protection 135
3.3 Malfunction display: Discharge temperature protection 137
3.4 Malfunction display: Current protection 137
3.5 Malfunction display: Communication error 138
3.6 Malfunction display: Indoor unit water full protection 139
3.7 Malfunction display: Temperature sensor error 139
3.8 Malfunction display: High/Low pressure sensor error 140
4 POWER DISTRIBUTION 141
4.1 Diagram of Power Distribution 141
4.2 Wiring diagram 142
5 THE RESISTANCES OF COMMON TEMPERATURE SENSORS 150
5.1 15 KΩ 150
5.2 20 KΩ 151
5.3 50 KΩ 152
6 DISASSEMBLY AND ASSEMBLY PROCEDURE OF MAIN PARTS 155
6.1 Outdoor Unit 155
6.2 Indoor unit 160
7 EXPLODED VIEWS AND PART LIST 173
7.1 Outdoor unit 173
7.2 Indoor unit 176
7.3 BU Module 210

PRODUCT

PRODUCT

1 MODELS LIST

1.1 Outdoor Unit

Model	Product code	Cooling Capacity	Heating Capacity	Refrigerant	Power supply	Appearance
		kW	kW		Ph, V, Hz	
GWHD(42S)NK3CO	CN860W0070	12.1	12.5	R410A	1,220~240,50	
GWHD(48S)NK3CO	CN860W0080	14.0	15.5			
GWHD(56S)NK3CO	CN860W0090	15.5	17.5			

1.2 BU Module

Model	Product code	Number of connectable indoor units		Refrigerant	Power supply	Appearance
		Min	Max		Ph, V, Hz	
FXA2A-K	EN01300100	1	2	R410A	1,220~240,50	
FXA2B-K	LN01300200					
FXA3A-K	EN01300110	1	3			
FXA3B-K	LN01300210					

1.3 Indoor Unit

1.3.1 Wall mounted type

➢ Hansol

Model	Product code	Capacity		Refrigerant	Power supply	Appearance
		Cooling (kW)	Heating (kW)		Ph, V, Hz	
GWH(07)TA-K3DNA1E/I	CB148N05201	2.1	2.6	R410A	1,220~240,50	
GWH(09)TA-K3DNA1E/I	CB148N05301	2.5	2.75			
GWH(12)TB-K3DNA1E/I	CB148N05401	3.5	3.65			
GWH(18)TC-K3DNA1E/I	CB148N05501	5.3	5.6			

➢ U-cool

Model	Product code	Capacity		Refrigerant	Power supply	Appearance
		Cooling (kW)	Heating (kW)		Ph, V, Hz	
GWH(07)UA-K3DNA1B/I	CB204N02600	2.1	2.6	R410A	1,220~240,50	
GWH(09)UA-K3DNA1B/I	CB204N02700	2.6	2.8			
GWH(12)UB-K3DNA1B/I	CB204N02800	3.5	3.8			
GWH(18)UC-K3DNA1B/I	CB204N02900	5.3	5.8			

➢ Cozy

Model	Product code	Capacity		Refrigerant	Power supply	Appearance
		Cooling (kW)	Heating (kW)		Ph, V, Hz	
GWH(07)MA-K3DNA3E/I	CB171N08600	2.1	2.6	R410A	1,220~240,50	
GWH(09)MA-K3DNA3E/I	CB171N08501	2.6	2.8			
GWH(12)MB-K3DNA3E/I	CB171N08701	3.5	3.8			
GWH(18)MC-K3DNA3E/I	CB171N08401	5.3	5.8			

➢ Change

Model	Product code	Capacity		Refrigerant	Power supply	Appearance
		Cooling (kW)	Heating (kW)		Ph, V, Hz	
GWH(07)KF-K3DNA6E/I	CB146N26201	2.1	2.6	R410A	1,220~240,50	
GWH(09)KF-K3DNA6E/I	CB146N26301	2.6	2.8			
GWH(12)KF-K3DNA6E/I	CB146N26401	3.5	3.8			
GWH(18)KG-K3DNA6E/I	CB146N26501	5.3	5.8			

➢ Viola

Model	Product code	Capacity		Refrigerant	Power supply	Appearance
		Cooling (kW)	Heating (kW)		Ph, V, Hz	
GWH(07)RA-K3DNA3E/I	CB302N01501	2.1	2.6	R410A	1,220~240,50	
GWH(09)RA-K3DNA3E/I	CB302N01601	2.6	2.8			
GWH(12)RB-K3DNA3E/I	CB302N01701	3.5	3.8			
GWH(18)RC-K3DNA3E/I	CB302N01801	5.3	5.8			
GWH(24)RC-K3DNA1A/I	CB144N01100	6.45	7.1			

1.3.2 Duct type

Model	Product code	Capacity		Refrigerant	Power supply	Appearance
		Cooling (kW)	Heating (kW)		Ph, V, Hz	
GFH(09)EA-K3DNA1A/I	CN210N0010	2.5	2.8	R410A	1,220~240,50	
GFH(12)EA-K3DNA1A/I	CN210N0020	3.5	3.85			
GFH(18)EA-K3DNA1A/I	CN210N0030	5.0	5.5			
GFH(21)EA-K3DNA1A/I	CN210N0040	6.0	6.6			
GFH(24)EA-K3DNA1A/I	CN210N0050	7.1	8.0			

1.3.3 Cassette

Model	Product code	Capacity		Refrigerant	Power supply	Appearance
		Cooling (kW)	Heating (kW)		Ph, V, Hz	
GKH(12)BA-K3DNA2A/I	CN510N0040	3.5	4.0	R410A	1,220~240,50	
GKH(18)BA-K3DNA2A/I	CN510N0050	4.5	5.0			
GKH(12)BA-K3DNA1A/I	CN510N0010	3.5	3.85			
GKH(18)BA-K3DNA1A/I	CN510N0020	5.0	5.5			
GKH(24)BA-K3DNA1A/I	CN510N0030	7.1	8.0			

1.3.4 Floor ceiling

Model	Product code	Capacity		Refrigerant	Power supply	Appearance
		Cooling (kW)	Heating (kW)		Ph, V, Hz	
GTH(09)BA-K3DNA1A/I	CN610N0010	2.5	2.8	R410A	1,220~240,50	
GTH(12)BA-K3DNA1A/I	CN610N0020	3.5	3.85			
GTH(18)BA-K3DNA1A/I	CN610N0030	5.0	5.5			
GTH(24)BA-K3DNA1A/I	CN610N0040	7.1	8.0			

1.3.5 Console

Model	Product code	Capacity		Refrigerant	Power supply	Appearance
		Cooling (kW)	Heating (kW)		Ph, V, Hz	
GEH(09)AA-K3DNA1C/I	CV010N01500	2.6	2.8	R410A	1,220~240,50	
GEH(12)AA-K3DNA1C/I	CV010N01600	3.5	3.8			
GEH(18)AA-K3DNA1C/I	CV010N01700	5.3	5.8			

2 NOMENCLATURE

2.1 Nomenclature of Outdoor Unit

GW	□	□	(□)	□	□	□	□	O
1	2	3	4	5	6	7	8	9

NO.	Description	Options
1	GW	Free-Match Code
2	Cooling Function	C: Cooling Only H: Heat pump
3	Compressor Frequency	D:DC inverter rotor type
4	Cooling Capacity	48 represents 48000Btu/h 1kW=3.412KBtu S represents super free match
5	Climate Type	T1
6	Power Supply	M:380-415V-3Ph-50Hz; D: 208/230V-1Ph-60Hz K:220-240V-1Ph-50Hz
7	Refrigerant	3-R410A
8	Design No.	C :Third generation
9	O	O:Outdoor unit

2.2 Nomenclature of BU Module

FX	□	□	□
1	2	3	4

No.	Description	Options
1	Assembly type	FX-branch module
2	Body code	A、B、C……
3	Number of port	2−two ports; 3−three ports; 5−five ports
4	Design code	A、B、C……

2.3 Nomenclature of Indoor Unit

G	□	□	(□)	□	–	□	□	□	□	□	□	/	I
1	2	3	4	5		6	7	8	9	10	11		12

NO.	Description	Options
1	G	GREE
2	Product Type	W: Wall mounted type F:Duct type K:Cassette type E:Console T:Floor ceiling type
3	Cooling Function	C: Cooling Only H: Heat pump
4	Cooling Capacity	12 represents 12000Btu/h 1kW=3.412KBtu
5	Series	Alphabets: Series code + Shell code
6	Power Supply	K:220-240V-1Ph-50Hz; D: 208/230V-1Ph-60Hz
7	Refrigerant	3-R410A
8	Compressor Frequency	D:DC inverter rotor type
9	Climate Type	T1
10	Panel Code	1 Alphabet +1 Numeral
11	Design No.	A :First generation
12	I	I:indoor Unit

3 FUNCTION

Function		Wall mounted	Duct type	Cassette type	Floor ceiling type	Console type
For Comfortable Air Conditioning	Fan operation Mode	●	●	●	●	●
	Auto Swing Controller	●	/	●	●	●
	Timer Selector	●	●	●	●	●
	Auto Mode Operation	●	●	●	●	●
	Cool Mode Operation	●	●	●	●	●
	Heat Mode Operation	●	●	●	●	●
	Dry Mode Operation	●	●	●	●	●
	Fan Mode Operation	●	●	●	●	●
	Sleep mode setting	●	●	●	●	●
	Drain Pump	/	●	●	/	/
For Flexible Control	Wired Controller	/	●	●	●	/
	Wireless Remote Controller	●	●	●	●	●

●: Have Functions

/ : No Functions

4 PRODUCT DATA

4.1 Product Data of Outdoor Unit

Model	Heat pump			GWHD(42S)NK3CO	GWHD(48S)NK3CO	GWHD(56S)NK3CO
Cooling capacity			KW	12.1	14	15.5
Heating capacity			KW	12.5	15.5	17.5
Nominal input	Cooling		KW	4.1	4.9	5.3
	Heating		KW	3.7	4.3	4.8
EER/COP				2.95/3.37	2.85/3.60	2.92/3.64
Maximum NO. of connectable indoor units				6	8	9
Total capacity index of to be connected indoor units			Min	50	50	50
			Max	135	135	135
Power supply				1Ph, 220~240V, 50Hz		
Dimensions (H×W×D)			mm	1350×900×340	1350×900×340	1350×900×340
Net weight/Gross weight			kg	116/125	116/125	116/125
Sound pressure level	cooling/heating		dB(A)	55	55	58
Fan	Type			Axial-flow		
	Air Flow Volume		m^3/h	6400	6400	7000
Refrigerant	Name			R410A		
	Charge		kg	4.95	4.95	4.95
	Control			Electronic expansion valve		
Refrigerant oil	Type			FV50S	FV50S	FV50S
	Charge		L	1.35	1.35	1.35
Compressor	Type			Inverter Rotary		
	Quantity			1		
Piping connections	Gas		mm	Φ15.9	Φ15.9	Φ15.9
	Liquid		mm	Φ9.52	Φ9.52	Φ9.52
Piping length	System total		m	115	135	145
	total	OU-BU	m	55		
		BU-IN	m	60	80	90
	1 room	BU-IN	m	15		
Height		OU-BU	m	30		
		OU-IN	m	30		
		BU-BU/IN-IN	m	15		
Operation range	Cooling		℃DB	18~48		
	Heating		℃DB	-10～24		

Notes:

a. The rated cooling capacity data is measured under the following work condition: Indoor Temperature is 27℃DB, 19℃WB. Outdoor Temperature is 35℃DB. The rated heating capacity data is measured under the following work condition: Indoor Temperature is 20℃DB. Outdoor Temperature is 7℃DB, 6℃WB.

b. The data will change with the change of products. Refer to those parameters listed on nameplate.

c. Noise was tested in semi-silenced room, so the actual noise value will be a little higher for change of ambient.

4.2 Product Data of Indoor Unit

4.2.1 Wall mounted

➢ **Hansol**

Model			GWH(07)TA-K 3DNA1E/I	GWH(09)TA-K 3DNA1E/I	GWH(12)TB-K 3DNA1E/I	GWH(18)TC-K 3DNA1E/I
Capacity	Cooling	kW	2.10	2.5	3.50	5.30
	Heating	kW	2.60	2.75	3.65	5.60
Power supply		V-Ph-Hz	220~240-1-50	220~240-1-50	220~240-1-50	220~240-1-50
Motor power input		kW	0.029	0.029	0.029	0.045
Air flow volume		m3/h	550	550	770	950
		CFM	324	324	430	559
Sound pressure level (SH/H/MH/M/ML/L/SL)		dB(A)	41/36/34/32/28/ 24/21	41/36/34/32/28/ 24/21	43/36/34/32/28/ 24/21	49/44/41/39/36/ 33/30
Fan motor	Output	kW	0.015	0.015	0.015	0.025
	Running current	A	0.07	0.07	0.07	0.1
Connecting pipe	Gas	inch	3/8″(Φ9.52mm)	3/8″(Φ9.52mm)	1/2″(Φ12.7mm)	5/8″(Φ15.9mm)
	Liquid	inch	1/4″(Φ6.35mm)	1/4″(Φ6.35mm)	1/4″(Φ6.35mm)	1/4″(Φ6.35mm)
	Connection method		Flare Connection	Flare Connection	Flare Connection	Flare Connection
Drain pipe	External dia.	mm	Φ20	Φ20	Φ20	Φ20
	Thickness	mm	1.5	1.5	1.5	1.5
Outline dimension	W×D×H	mm	806×209×292	806×209×292	866×209×292	1018×230×319
Package dimension	W×D×H	mm	888×297×377	888×297×377	945×297×377	1097×397×340
Net Weight/Gross weight		kg	10.5/13.0	10.5/13.0	11.0/13.5	15.0/18.5
Loading quantity		20'GP	266	266	252	174
		40' GP	553	553	518	366
		40' HQ	632	632	592	427

Notes:

a. The rated cooling capacity data is measured under the following work condition: Indoor Temperature is 27℃ DB, 19℃WB. Outdoor Temperature is 35℃DB. The rated heating capacity data is measured under the following work condition: Indoor Temperature is 20℃DB. Outdoor Temperature is 7℃DB, 6℃WB.

b. The data will change with the change of products. Refer to those parameters listed on nameplate.

c. Noise was tested in semi-silenced room, so the actual noise value will be a little higher for change of ambient.

➢ **U-cool**

Model			GWH(07)UA-K 3DNA1B/I	GWH(09)UA-K 3DNA1B/I	GWH(12)UB-K 3DNA1B/I	GWH(18)UC-K 3DNA1B/I
Capacity	Cooling	kW	2.1	2.6	3.5	5.3
	Heating	kW	2.6	2.8	3.8	5.8
Power supply		V-Ph-Hz	220~240-1-50	220~240-1-50	220~240-1-50	220~240-1-50
Motor power input		kW	0.03	0.03	0.04	0.06
Air flow volume		m3/h	450	450	560	850
		CFM	265	265	330	500
Sound pressure level (SH/H/MH/M/ML/L/SL)		dB(A)	37/35/32/30/28/ 26/24	38/35/32/30/28/ 26/25	39/37/34/31/29/ 27/26	44/40/37/35/33/ 31/28
Fan motor	Output	kW	0.01	0.01	0.02	0.025
	Running current	A	0.136	0.136	0.2	0.31
Connecting pipe	Gas	inch	3/8″(Φ9.52mm)	3/8″(Φ9.52mm)	3/8″(Φ9.52mm)	1/2″(Φ12.7mm)
	Liquid	inch	1/4″(Φ6.35mm)	1/4″(Φ6.35mm)	1/4″(Φ6.35mm)	1/4″(Φ6.35mm)
	Connection method		Flare Connection	Flare Connection	Flare Connection	Flare Connection
Drain pipe	External dia.	mm	Φ20	Φ20	Φ20	Φ20
	Thickness	mm	1.5	1.5	1.5	1.5
Outline dimension	W×D×H	mm	860×153×299	860×153×299	896×159×320	998×178×340
Package dimension	W×D×H	mm	944×247×386	944×247×386	973×255×403	1083×283×428
Net Weight/ Gross weight		kg	9.5/12.5	9.5/12.5	10/13	14.0/17.0
Loading quantity		20'GP	324	324	279	216
		40' GP	666	666	585	440
		40' HQ	740	740	650	495

Notes:

a. The rated cooling capacity data is measured under the following work condition: Indoor Temperature is 27℃DB, 19℃WB. Outdoor Temperature is 35℃DB. The rated heating capacity data is measured under the following work condition: Indoor Temperature is 20℃DB. Outdoor Temperature is 7℃DB, 6℃WB.

b. The data will change with the change of products. Refer to those parameters listed on nameplate.

c. Noise was tested in semi-silenced room, so the actual noise value will be a little higher for change of ambient.

➢ **Cozy**

Model			GWH(07)MA-K 3DNA3E/I	GWH(09)MA-K 3DNA3E/I	GWH(12)MB-K 3DNA3E/I	GWH(18)MC-K 3DNA3E/I
Capacity	Cooling	kW	2.1	2.6	3.5	5.3
	Heating	kW	2.6	2.8	3.8	5.8
Power supply		V-Ph-Hz	220~240-1-50	220~240-1-50	220~240-1-50	220~240-1-50
Motor power input		kW	0.03	0.03	0.04	0.045
Air flow volume		m^3/h	450	500	630	850
		CFM	265	294	371	500
Sound pressure level (SH/H/M/L)		dB(A)	36/34/31/28/-	37/34/31/28/-	38/34/32/30/-	46/43/40/36/-
Fan motor	Output	kW	0.01	0.01	0.02	0.02
	Running current	A	0.14	0.14	0.22	0.31
Connecting pipe	Gas	inch	3/8″(Φ9.52mm)	3/8″(Φ9.52mm)	3/8″(Φ9.52mm)	1/2″(Φ12.7mm)
	Liquid	inch	1/4″(Φ6.35mm)	1/4″(Φ6.35mm)	1/4″(Φ6.35mm)	1/4″(Φ6.35mm)
	Connection method		Flare Connection	Flare Connection	Flare Connection	Flare Connection
Drain pipe	External dia.	mm	Φ20	Φ20	Φ20	Φ20
	Thickness	mm	1.5	1.5	1.5	1.5
Outline dimension	W×D×H	mm	790×170×265	790×170×265	845×180×275	940×200×298
Package dimension	W×D×H	mm	873×251×370	873×251×370	918×258×370	1013×288×395
Net Weight/ Gross weight		kg	9/11	9/11	10/12.5	13/16
Loading quantity		20'GP	348	348	336	254
		40' GP	732	732	684	541
		40' HQ	852	852	798	609

Notes:

a. The rated cooling capacity data is measured under the following work condition: Indoor Temperature is 27℃ DB, 19℃WB. Outdoor Temperature is 35℃DB. The rated heating capacity data is measured under the following work condition: Indoor Temperature is 20℃DB. Outdoor Temperature is 7℃DB, 6℃WB.

b. The data will change with the change of products. Refer to those parameters listed on nameplate.

c. Noise was tested in semi-silenced room, so the actual noise value will be a little higher for change of ambient.

➢ **Change**

Model			GWH(07)KF-K 3DNA6E/I	GWH(09)KF-K 3DNA6E/I	GWH(12)KF-K 3DNA6E/I	GWH(18)KG-K 3DNA6E/I
Capacity	Cooling	kW	2.1	2.6	3.5	5.3
	Heating	kW	2.6	2.8	3.8	5.8
Power supply		V-Ph-Hz	220~240-1-50	220~240-1-50	220~240-1-50	220~240-1-50
Motor power input		kW	0.03	0.03	0.03	0.06
Air flow volume		m^3/h	550	600	680	800
		CFM	324	353	400	471
Sound pressure level (SH/H/M/L)		dB(A)	40/38/30/24/-	41/38/30/24/-	42/39/31/25/-	45/40/37/32/-
Fan motor	Output	kW	0.01	0.01	0.01	0.02
	Running current	A	0.16	0.16	0.16	0.31
Connecting pipe	Gas	inch	3/8″(Φ9.52mm)	3/8″(Φ9.52mm)	3/8″(Φ9.52mm)	1/2″(Φ12.7mm)
	Liquid	inch	1/4″(Φ6.35mm)	1/4″(Φ6.35mm)	1/4″(Φ6.35mm)	1/4″(Φ6.35mm)
	Connection method		Flare Connection	Flare Connection	Flare Connection	Flare Connection
Drain pipe	External dia.	mm	Φ20	Φ20	Φ20	Φ20
	Thickness	mm	1.5	1.5	1.5	1.5
Outline dimension	W×D×H	mm	770×201×283	770×201×283	770×201×283	865×215×305
Package dimension	W×D×H	mm	847×264×357	847×264×357	847×264×357	948×298×395
Net Weight/ Gross weight		kg	8/10	8/10	9/11	12/15
Loading quantity		20'GP	328	328	328	264
		40' GP	688	688	688	542
		40' HQ	774	774	774	616

Notes:

a. The rated cooling capacity data is measured under the following work condition: Indoor Temperature is 27℃DB, 19℃WB. Outdoor Temperature is 35℃DB. The rated heating capacity data is measured under the following work condition: Indoor Temperature is 20℃DB. Outdoor Temperature is 7℃DB, 6℃WB.

b. The data will change with the change of products. Refer to those parameters listed on nameplate.

c. Noise was tested in semi-silenced room, so the actual noise value will be a little higher for change of ambient.

➢ **Viola**

Model			GWH(07)RA-K3DNA3E/I	GWH(09)RA-K3DNA3E/I
Capacity	Cooling	kW	2.1	2.6
	Heating	kW	2.6	2.8
Power supply		V-Ph-Hz	220~240-1-50	220~240-1-50
Motor power input		kW	0.03	0.03
Air flow volume		m^3/h	500	500
		CFM	294	294
Sound pressure level (SH/H/M/L)		dB(A)	40/37/35/32/-	40/37/35/32/-
Fan motor	Output	kW	0.01	0.01
	Running current	A	0.14	0.14
Connecting pipe	Gas	inch	3/8″(Φ9.52mm)	3/8″(Φ9.52mm)
	Liquid	inch	1/4″(Φ6.35mm)	1/4″(Φ6.35mm)
	Connection method		Flare Connection	Flare Connection
Drain pipe	External dia.	mm	Φ20	Φ20
	Thickness	mm	1.5	1.5
Outline dimension	W×D×H	mm	794×186×265	794×186×265
Package dimension	W×D×H	mm	873×270×353	873×270×353
Net Weight/ Gross weight		kg	9/11.5	9/11.5
Loading quantity		20'GP	348	348
		40' GP	720	720
		40' HQ	840	840

Model			GWH(12)RB-K3DN A3E/I	GWH(18)RC-K3DN A3E/I	GWH(24)RC-K3DN A1A/I
Capacity	Cooling	kW	3.5	5.3	6.45
	Heating	kW	3.8	5.8	7.1
Power supply		V-Ph-Hz	220~240-1-50	220~240-1-50	220~240-1-50
Motor power input		kW	0.05	0.06	0.065
Air flow volume		m^3/h	630	850	1000
		CFM	371	500	588
Sound pressure level (SH/H/M/L)		dB(A)	42/39/36/33/-	45/42/37/33/-	48/46/44/42/-
Fan motor	Output	kW	0.02	0.02	0.035
	Running current	A	0.22	0.31	0.31
Connecting pipe	Gas	inch	3/8″(Φ9.52mm)	1/2″(Φ12.7mm)	5/8″(Φ15.9mm)
	Liquid	inch	1/4″(Φ6.35mm)	1/4″(Φ6.35mm)	3/8″(Φ9.52mm)
	Connection method		Flare Connection	Flare Connection	Flare Connection
Drain pipe	External dia.	mm	Φ20	Φ20	Φ20
	Thickness	mm	1.5	1.5	1.5
Outline dimension	W×D×H	mm	848×189×274	945×208×298	1018×223×315
Package dimension	W×D×H	mm	926×279×359	1013×300×383	1086×328×398
Net Weight/ Gross weight		kg	10/12.5	13/16	15.5/20.5
Loading quantity		20'GP	306	254	174
		40' GP	636	541	366
		40' HQ	742	609	427

Notes:

a. The rated cooling capacity data is measured under the following work condition: Indoor Temperature is 27℃DB, 19℃WB. Outdoor Temperature is 35℃DB. The rated heating capacity data is measured under the following work condition: Indoor Temperature is 20℃DB. Outdoor Temperature is 7℃DB, 6℃WB.

b. The data will change with the change of products. Refer to those parameters listed on nameplate.

c. Noise was tested in semi-silenced room, so the actual noise value will be a little higher for change of ambient.

4.2.2 Duct type

Model	Heat pump		GFH(09)EA-K3D NA1A/I	GFH(12)EA-K3D NA1A/I	GFH(18)EA-K3D NA1A/I
Capacity	Cooling	KW	2.50	3.50	5.00
	Heating	KW	2.80	3.85	5.50
Power supply		V-Ph-Hz	220~240-1-50	220~240-1-50	220~240-1-50
Motor power input		kW	0.065	0.075	0.08
Air flow volume		m3/h	450	500	700
		CFM	265	294	412
Sound pressure level (H/L)		dB(A)	37/31	39/32	41/33
Fan motor	Output	kW	0.03	0.04	0.05
	Running current	A	0.28	0.31	0.41
Connecting pipe	Gas	inch	3/8″(Φ9.52mm)	3/8″(Φ9.52mm)	1/2″(Φ12.7mm)
	Liquid	inch	1/4″(Φ6.35mm)	1/4″(Φ6.35mm)	1/4″(Φ6.35mm)
	Connection method		Flare Connection	Flare Connection	Flare Connection
Drain pipe	External dia.	mm	Φ31	Φ31	Φ31
	Thickness	mm	3	3	3
Outline dimension	W×D×H	mm	700×615×200	700×615×200	900×615×200
Package dimension	W×D×H	mm	893×743×305	893×743×305	1123×743×305
Net Weight/ Gross weight		kg	22/27	23/29	27/36
Loading quantity		20'GP	108	108	90
		40' GP	234	234	180
		40' HQ	234	234	180

Model	Heat pump		GFH(21)EA-K3DNA1A/I	GFH(24)EA-K3DNA1A/I
Capacity	Cooling	KW	6.00	7.10
	Heating	KW	6.60	8.00
Power supply		V-Ph-Hz	220~240-1-50	220~240-1-50
Motor power input		kW	0.11	0.11
Air flow volume		m3/h	1000	1000
		CFM	588.5	588.5
Sound pressure level		dB(A)	42/34	42/34
Fan motor	Output	kW	0.061	0.061
	Running current	A	0.5	0.5
Connecting pipe	Gas	inch	5/8″(Φ15.9mm)	5/8″(Φ15.9mm)
	Liquid	inch	3/8″(Φ9.52mm)	3/8″(Φ9.52mm)
	Connection method		Flare Connection	Flare Connection
Drain pipe	External dia.	mm	Φ31	Φ31
	Thickness	mm	3	3
Outline dimension	W×D×H	mm	1100×615×200	1100×615×200
Package dimension	W×D×H	mm	1323×743×305	1323×743×305
Net Weight/ Gross weight		kg	31/41	31/41
Loading quantity		20'GP	72	72
		40' GP	162	162
		40' HQ	162	162

Notes:

a. The rated cooling capacity data is measured under the following work condition: Indoor Temperature is 27℃DB, 19℃WB. Outdoor Temperature is 35℃DB. The rated heating capacity data is measured under the following work condition: Indoor Temperature is 20℃DB. Outdoor Temperature is 7℃DB, 6℃WB.

b. The data will change with the change of products. Refer to those parameters listed on nameplate.

c. Noise was tested in semi-silenced room, so the actual noise value will be a little higher for change of ambient.

4.2.3 Cassette

Model	Heat pump		GKH(12)BA-K3DNA2A/I	GKH(18)BA-K3DNA2A/I
Capacity	Cooling	KW	3.50	4.50
	Heating	KW	4.00	5.00
Power supply		V-Ph-Hz	220~240-1-50	220~240-1-50
Motor power input		kW	0.05	0.05
Air flow volume		m3/h	600	600
		CFM	353	353
Sound pressure level(H/L)		dB(A)	46/42	46/42
Fan motor	Output	kW	0.011	0.011
	Running current	A	0.23	0.23
Connecting pipe	Gas	inch	3/8″(Φ9.52mm)	1/2″(Φ12.7mm)
	Liquid	inch	1/4″(Φ6.35mm)	1/4″(Φ6.35mm)
	Connection method		Flare Connection	Flare Connection
Drain pipe	External dia.	mm	Φ31	Φ31
	Thickness	mm	3	3
Outline dimension	Body W×D×H	mm	570×570×230	570×570×230
	Panel W×D×H	mm	650×650×50	650×650×50
Package dimension	Body W×D×H	mm	851×731×325	851×731×325
	Panel W×D×H	mm	733×673×117	733×673×117
Body	Net Weight/Gross weight	kg	18.0/23.0	18.0/23.0
Panel	Net Weight/Gross weight	kg	2.5/3.5	2.5/3.5
Loading quantity		20'GP	102	102
		40'GP	209	209
		40'HQ	246	246

Model	Heat pump		GKH(12)BA-K3 DNA1A/I	GKH(18)BA-K3 DNA1A/I	GKH(24)BA-K3 DNA1A/I
Capacity	Cooling	KW	3.50	5.00	7.10
	Heating	KW	3.85	5.50	8.00
Power supply		V-Ph-Hz	220~240-1-50	220~240-1-50	220~240-1-50
Motor power input		kW	0.07	0.07	0.10
Air flow volume		m3/h	680	680	1180
		CFM	400	400	694
Sound pressure level (H/L)		dB(A)	37/33	37/33	39/35
Fan motor	Output	kW	0.035	0.035	0.035
	Running current	A	0.3	0.3	0.4
Connecting pipe	Gas	inch	3/8″(Φ9.52mm)	1/2″(Φ12.7mm)	5/8″(Φ15.9mm)
	Liquid	inch	1/4″(Φ6.35mm)	1/4″(Φ6.35mm)	3/8″(Φ9.52mm)
	Connection method		Flare Connection	Flare Connection	Flare Connection
Drain pipe	External dia.	mm	Φ31	Φ31	Φ31
	Thickness	mm	3	3	3
Outline dimension	Body W×D×H	mm	840×840×190	840×840×190	840×840×240
	Panel W×D×H	mm	950×950×60	950×950×60	950×950×60
Package dimension	Body W×D×H	mm	963×963×273	963×963×273	963×963×325
	Panel W×D×H	mm	1043×1028×130	1043×1028×130	1043×1028×130
Body	Net Weight/Gross weight	kg	25.0/33.0	25.0/33.0	28.0/35.0
Panel	Net Weight/Gross weight	kg	6.5/10	6.5/10	6.5/10
Loading quantity		20'GP	48	48	40
		40' GP	128	128	108
		40' HQ	144	144	128

Notes:

a. The rated cooling capacity data is measured under the following work condition: Indoor Temperature is 27℃DB, 19℃WB. Outdoor Temperature is 35℃DB. The rated heating capacity data is measured under the following work condition: Indoor Temperature is 20℃DB. Outdoor Temperature is 7℃DB, 6℃WB.

b. The data will change with the change of products. Refer to those parameters listed on nameplate.

c. Noise was tested in semi-silenced room, so the actual noise value will be a little higher for change of ambient.

4.2.4 Floor ceiling type

Model	Heat pump		GTH(09)BA-K3 DNA1A/I	GTH(12)BA-K3 DNA1A/I	GTH(18)BA-K3 DNA1A/I	GTH(24)BA-K3 DNA1A/I
Capacity	Cooling	KW	2.50	3.50	5.00	7.10
	Heating	KW	2.80	3.85	5.50	8.00
Power supply		V-Ph-Hz	220~240-1-50	220~240-1-50	220~240-1-50	220~240-1-50
Motor power input		kW	0.055	0.055	0.11	0.11
Air flow volume		m3/h	650	650	950	1250
		CFM	382.5	382.5	559	736
Sound pressure level (H/L)		dB(A)	40/36	40/36	45/40	48/44
Fan motor	Output	kW	0.015	0.015	0.02	0.05
	Running current	A	0.3	0.3	0.5	0.5
Connecting pipe	Gas	inch	3/8″(Φ9.52mm)	3/8″(Φ9.52mm)	1/2″(Φ12.7mm)	5/8″(Φ15.9mm)
	Liquid	inch	1/4″(Φ6.35mm)	1/4″(Φ6.35mm)	1/4″(Φ6.35mm)	3/8″(Φ9.52mm)
	Connection method		Flare Connection	Flare Connection	Flare Connection	Flare Connection
Drain pipe	External dia.	mm	Φ17	Φ17	Φ17	Φ17
	Thickness	mm	1.75	1.75	1.75	1.75
Outline dimension	W×D×H	mm	1220×700×225	1220×700×225	1220×700×225	1220×700×225
Package dimension	W×D×H	mm	1343×823×315	1343×823×315	1343×823×315	1343×823×315
Net Weight/Gross weight		kg	40/50	40/50	40/50	45/54
Loading quantity		20'GP	66	66	66	66
		40' GP	132	132	132	132
		40' HQ	132	132	132	132

Notes:

a. The rated cooling capacity data is measured under the following work condition: Indoor Temperature is 27℃DB, 19℃WB. Outdoor Temperature is 35℃DB. The rated heating capacity data is measured under the following work condition: Indoor Temperature is 20℃DB. Outdoor Temperature is 7℃DB, 6℃WB.

b. The data will change with the change of products. Refer to those parameters listed on nameplate.

c. Noise was tested in semi-silenced room, so the actual noise value will be a little higher for change of ambient.

4.2.5 Console type

Model	Heat pump		GEH(09)AA-K3DNA1 C/I	GEH(12)AA-K3DNA1 C/I	GEH(18)AA-K3DNA1 C/I
Capacity	Cooling	KW	2.6	3.5	5.3
	Heating	KW	2.8	3.8	5.8
Power supply		V-Ph-Hz	220~240-1-50	220~240-1-50	220~240-1-50
Motor power input		kW	0.05	0.05	0.05
Air flow volume		m3/h	500	600	650
		CFM	294	353	383
Sound pressure level (SH/H/MH/M/ML/L/SL)		dB(A)	40/38/36/33/30/27/25	42/40/38/37/35/32/25	48/46/44/41/37/35/32
Fan motor	Output	kW	0.03	0.03	0.03
	Running current	A	0.14	0.14	0.14
Connecting pipe	Gas	inch	3/8″(Φ9.52mm)	3/8″(Φ9.52mm)	1/2″(Φ12.7mm)
	Liquid	inch	1/4″(Φ6.35mm)	1/4″(Φ6.35mm)	1/4″(Φ6.35mm)
	Connection method		Flare Connection	Flare Connection	Flare Connection
Drain pipe	External dia.	mm	Φ20	Φ20	Φ20
	Thickness	mm	1.5	1.5	1.5
Outline dimension	W×D×H	mm	700×215×600	700×215×600	700×215×600
Package dimension	W×D×H	mm	791×286×710	791×286×710	791×286×710
Net Weight/Gross weight		kg	15/18	15/18	15/18
Loading quantity		20'GP	168	168	168
		40' GP	348	348	348
		40' HQ	440	440	440

Notes:

a. The rated cooling capacity data is measured under the following work condition: Indoor Temperature is 27℃DB, 19℃WB. Outdoor Temperature is 35℃DB. The rated heating capacity data is measured under the following work condition: Indoor Temperature is 20℃DB. Outdoor Temperature is 7℃DB, 6℃WB.

b. The data will change with the change of products. Refer to those parameters listed on nameplate.

c. Noise was tested in semi-silenced room, so the actual noise value will be a little higher for change of ambient.

4.3 Product Data of BU Module

Model			FXA2A-K	FXA2B-K	FXA3A-K	FXA3B-K
Maximum numbers of connectable indoor units			2	2	3	3
Power Supply		V-Ph-Hz	220~240-1-50			
Connection port to outdoor unit	Gas pipe(inner diameter)	mm	Φ15.9	Φ19.3	Φ15.9	Φ19.3
	Liquid pipe(inner diameter)	mm	Φ9.52	Φ9.7	Φ9.52	Φ9.7
	Connection Method		Flare	Braze	Flare	Braze
Connection port to indoor unit	Gas pipe(inner diameter)	mm	Φ9.52	Φ16.3	Φ9.52	Φ16.3
	Liquid pipe(inner diameter)	mm	Φ6.35	Φ6.2	Φ6.35	Φ6.2
	Connection Method		Flare	Braze	Flare	Braze
Drainage pipe	External dia.	mm	Φ31	Φ31	Φ31	Φ31
	Thickness	mm	3	3	3	3
Sound pressure level		dB(A)	28	28	28	28
Net weight/Gross weight		kg	5.5/7.5	5.5/7.5	6/8	6/8

Notes:

a. The rated cooling capacity data is measured under the following work condition: Indoor Temperature is 27℃DB, 19℃WB. Outdoor Temperature is 35℃DB. The rated heating capacity data is measured under the following work condition: Indoor Temperature is 20℃DB. Outdoor Temperature is 7℃DB, 6℃WB.

b. The data will change with the change of products. Refer to those parameters listed on nameplate.

c. Noise was tested in semi-silenced room, so the actual noise value will be a little higher for change of ambient.

5 Working Temperature Range

Sorts	Indoor side state		Outdoor side state	
	Dry bulb temp. ℃	Wet bulb temp. ℃	Dry bulb temp. ℃	Wet bulb temp. ℃
Rated Cooling	27	19	35	24
Max. cooling	32	23	48	26
Min. cooling	21	15	18	—
Rated Heating	20	15	7	6
Max. heating	27	—	24	18
Min. heating	20	15	－10	—

6 PIPING DIAGRAM

Schematic Diagram of Super Free Match Series Inverter Heat Pump Multi System

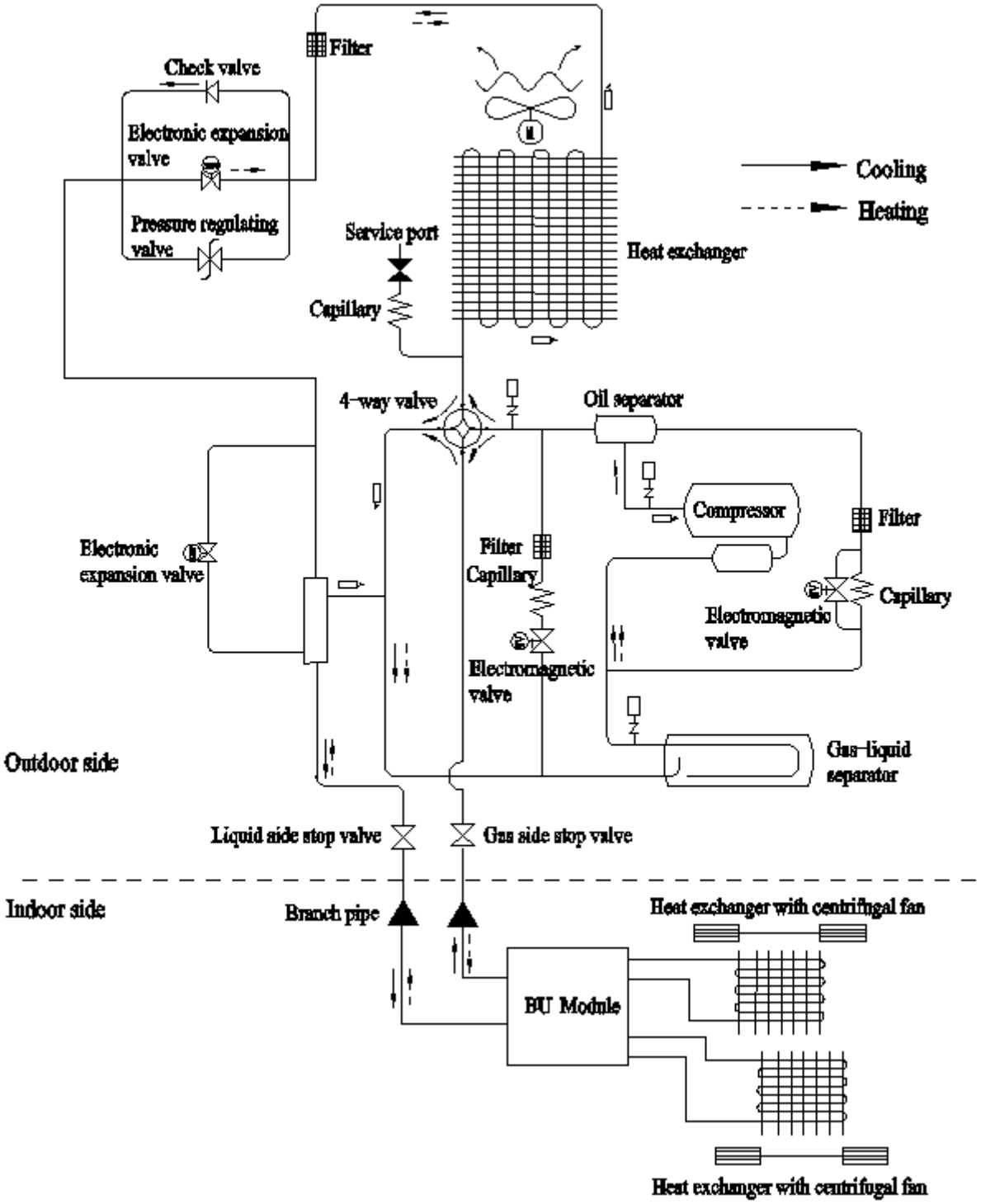

The units start to work once the power is switched on. During the cooling operation, the low temperature, low pressure refrigerant gas from the heat exchanger of each indoor unit gets together and then is taken into the compressor to be compressed into high temperature, high pressure gas, which will soon go to the heat exchanger of the outdoor unit to exchange heat with the outdoor air and then is turned into refrigerant liquid. After passing through the BU module, the temperature and pressure of the refrigerant liquid will further decrease and then go the main valve. After that, it will be divided and go to the heat exchanger of each indoor unit to exchange heat with the air which needs to be conditioned. Consequently, the refrigerant liquid become low temperature, low

pressure refrigerant gas again. Such a refrigeration cycle goes round and round to achieve the desired refrigeration purpose. During the heating operation, the four-way valve is involved to make the refrigeration cycle run reversely. The refrigerant radiates heat in the heat exchanger of the indoor unit (so do the electric heating devices) and absorb heat in the heat exchanger of the outdoor unit for a heat pump heating cycle so as to achieve the desired heating purpose.

CONTROL

Control

1 OPERATION FLOWCHART

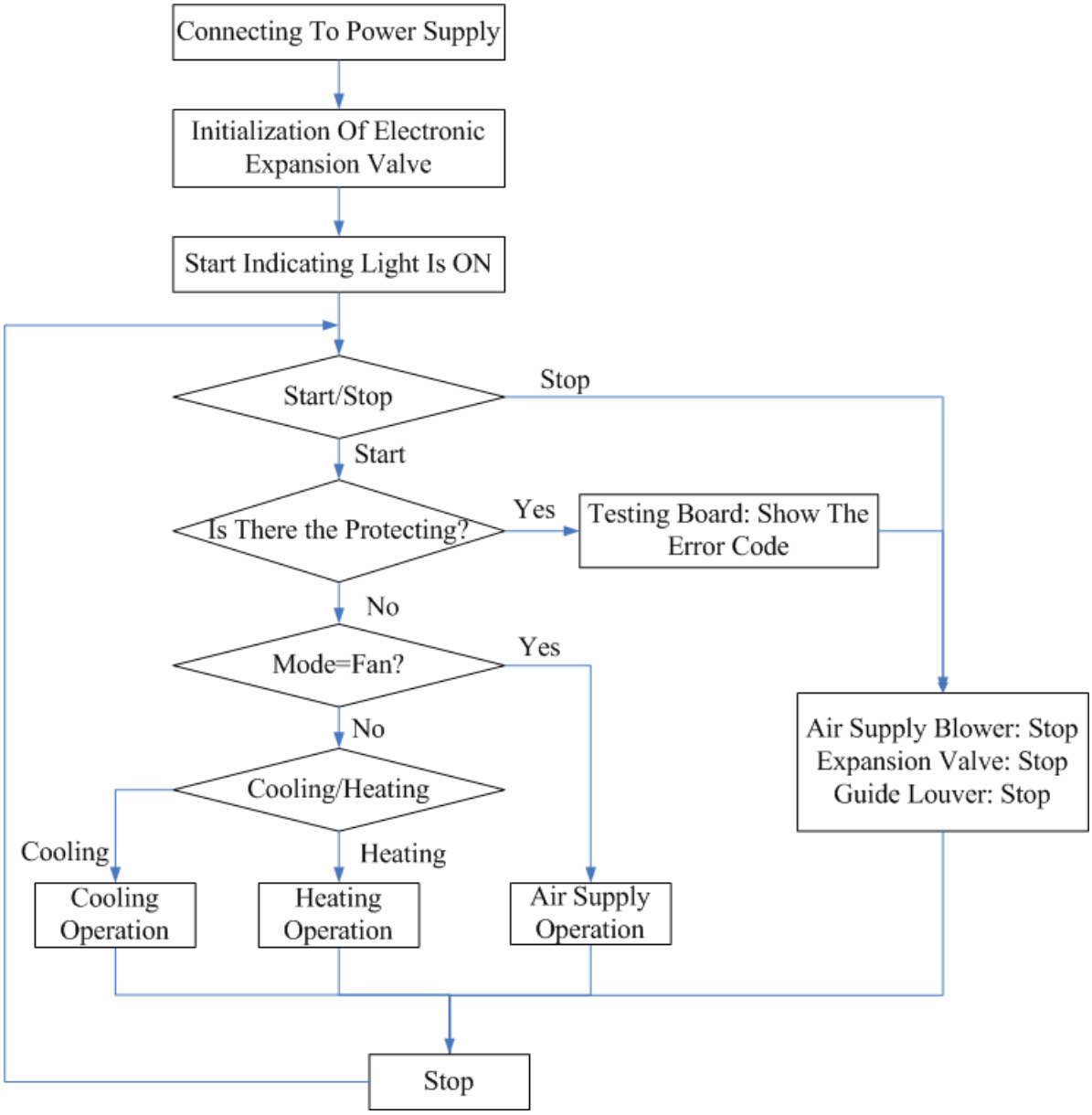

1.1 Cooling/Dry Operation

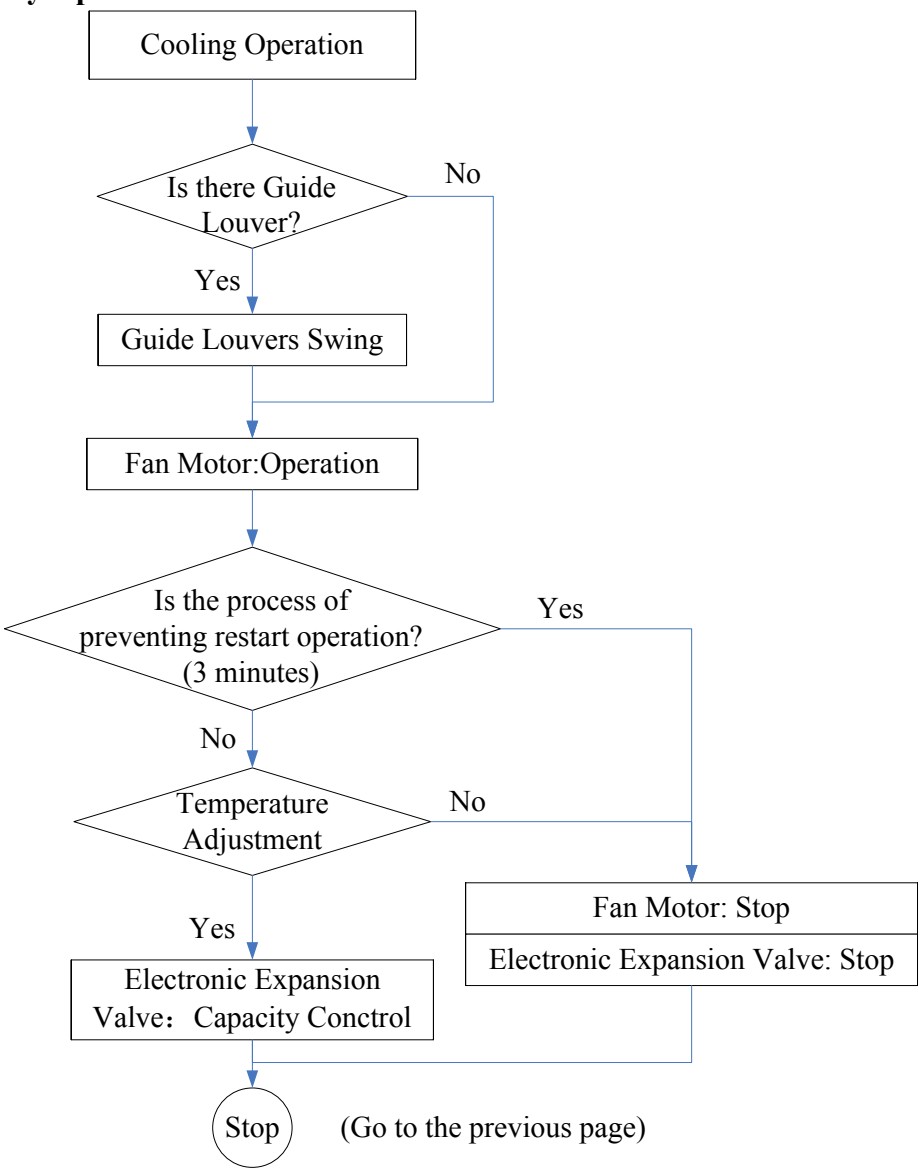

1.2 Heating Operation

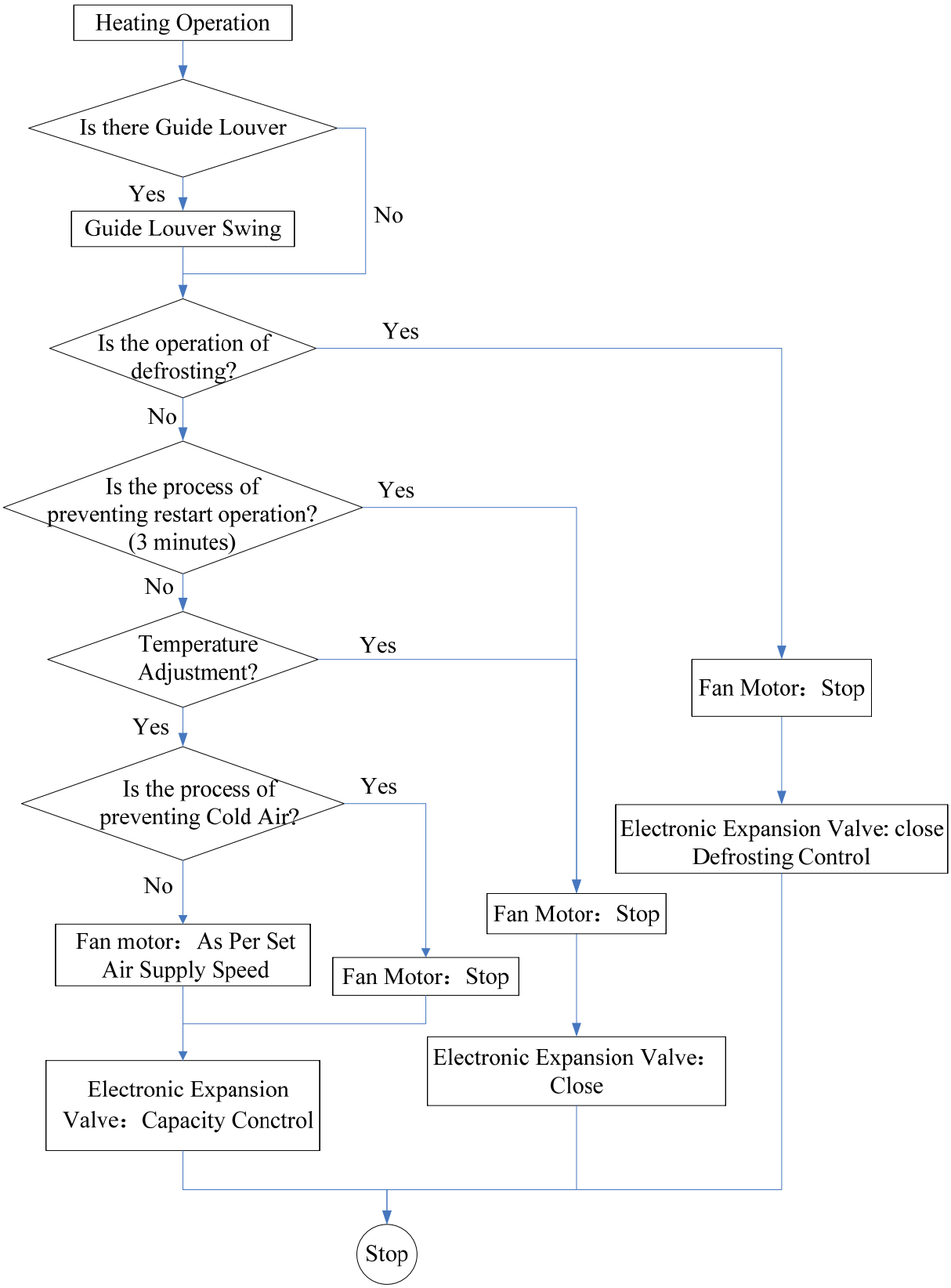

2 MAIN LOGIC

2.1 Control Function of Outdoor Unit

2.1.1 Cooling Mode

1) Cooling conditions and process:

If the compressor is in stop status and start the unit for cooling operation, when one of the indoor units reaches the cooling operation condition, the unit starts cooling operation; in this case, the electronic expansion valve, the outdoor fan and the compressor start operation.

2) Stop in cooling operation

a) Compressor stops

The compressor stops gradually, the outdoor fan stops after 1 min.

b) Some of the indoor units reach the stop condition (the compressor does not stop)

The compressor operates according to the required frequency. For the indoor unit with no requirement, the corresponding electronic expansion valve is closed to 0P.

3) Cooling mode transfers to heating mode

When the unit transfers to heating mode, the 4-way valve is energized after the compressor runs for 40s. The other disposals are the same as stopping in cooling mode.

4) 4-way valve:

In this mode, the 4-way valve is closed.

5) Outdoor fan control in cooling mode

The outdoor fan starts before 5s of the starting of compressor. The outdoor fan will run in high speed for 40s after starting and then it will run in set speed.

The fan shall run at every speed for at least 80s. (When the quantity of indoor unit changes, the control part will adjust the outdoor fan according to the quantity of indoor unit and outdoor temperature.); when the compressor stops, the outdoor fan runs at present speed and stops after 1 min.

2.1.2 Dry Mode

1) The dry conditions and process are the same as those in cooling mode;
2) The status of 4-way valve: closed;
3) The temperature setting range: 16 ~ 30℃;
4) Protection function: the same as those in cooling mode;
5) In dry mode, the maximum value A of the capacity requirement percentage of single unit is 90% of that in cooling mode. The open condition of the electronic expansion valve, outdoor fan and compressor is the same as those in cooling mode.

2.1.3 Heating Mode

1) Heating conditions and process: When one of the indoor units reaches the heating operation condition, the unit starts heating operation.
2) Stop in heating operation:

a) When all the indoor units reach the stop condition, the compressor stops and the outdoor fan stops after 1 min;

b) Some of the indoor units reach the stop condition. The compressor reduces the frequency immediately and operates according to the required frequency;

c) Heating mode transfers to cooling mode (dry mode), fan mode:

The compressor stops;

The outdoor fan stops after 1min;

The status of 4-way valve: energized;

3) Outdoor fan control in heating mode

The outdoor fan starts before 5s of the starting of compressor and then it will run in high speed for 40s; The fan shall run at every speed for at least 80s; When the compressor stops, the outdoor fan stops after 1min.

4) Defrosting function

When the defrosting condition is met, the frequency of the compressor starts to decrease and wait for defrosting; the electronic expansion valve of all indoor units open in big angle; the outdoor fan stops after the stop of the 4-way valve, meanwhile, the 4-way valve reverses the direction; after the 4-way valve reverses the direction, the frequency of the compressor starts to rise; then begin to calculate the time of defrosting, the frequency of the compressor rises to reach the defrosting frequency.

5) Oil-returned control in heating mode

a) Oil-returned condition

The whole unit is operating in low frequency for a long time

b) Oil-returned process in heating mode

The indoor unit displays “H1”.

c) Oil-returned finished condition in heating mode

The duration reaches 5min

2.1.4 Fan Mode

The compressor, the outdoor fan and the 4-way valve are closed; temperature setting range is 16～30℃.

2.2 Protection Function

2.2.1 Mode Conflict Protection of indoor unit

When the setting mode is different of different indoor unit, the unit runs in below status:

1) The mode of the first operating indoor unit is the basic mode, when compare the mode of the other indoor units to see if there is a conflict. Cooling mode (dry mode) is in conflict with heating mode.
2) Fan mode is in conflict with heating mode and the heating mode is the basic mode. No matter which indoor unit operates first, the unit will run in heating mode.

2.2.2 Overload Protection Function

When the tube temperature is a little low, the compressor raises the operation frequency; when the tube temperature is a little high, the compressor frequency is restricted or lows down the operation frequency; when the tube temperature is too high, the compressor protection stops running. If the discharge temperature protection continuously appears for 6 times, the compressor can’t resume running. The compressor can resume running after cutting off the power and then putting through the power. (If the running time of the compressor is longer than 7min, the protection times record will be cleared).

2.2.3 Discharge Protection Function

When the discharge temperature is a little low, the compressor raises the operation frequency; when the discharge temperature is a little high, the compressor frequency is restricted or lows down the operation frequency; when the discharge temperature is too high, the compressor protection stops running. If the discharge temperature protection continuously appears for 6 times, the compressor can’t resume running. The compressor can resume running after cutting off the power and then putting through the power. (If the running time of the compressor is longer than 7min, the protection times record will be cleared).

2.2.4 Communication malfunction

Detection of the quantity of installed indoor units and BU modules: After 3min of energizing, if the outdoor unit does not receive the communication data of certain indoor unit, the outdoor unit will judge that indoor unit is not installed and will treat it as it is not installed. If the outdoor unit receives the communication data of that indoor unit later, the outdoor unit will treat that unit as it is installed.

2.2.5 Compressor high-pressure protection

1) When the high-pressure switch is detected cut off for 3s continuously, the compressor will enter high-pressure protection as it stops when reaching set temperature. Meanwhile, the outdoor unit will send the signal of "high-pressure protection" to the indoor units;
2) After the appearance of high-pressure protection, the compressor can resume running only after cutting off the power and then putting through the power.

2.2.6 Compressor low-pressure protection

1) Low Pressure Protection for Shutdown

a). After the compressor stops for five minutes, if it is detected that the low pressure protection is work, then a low pressure protection signal will be send out.

b). If it is detected continuously for three seconds that the low pressure protection is work after the compressor stops for less than five minutes, then a low pressure protection signal will be send out. However, if the low pressure protection occurs twice in one hour, then it becomes unrecoverable and has to be recovered by powering the outdoor unit again.

2) Low Pressure Protection during the Operation

a) When it is detected continuously for three seconds that the low pressure protection is work, then the whole unit should be shut off and a low pressure protection signal should be sent to the indoor unit.

b) On condition that a low pressure protection error occurs and the whole unit has stopped for more than three minutes and it is detected continuously for six seconds that the low pressure protection switch is closed, then this error can be eliminated. However, if the low pressure protection occurs twice in one hour, then it has to eliminate the error by powering the outdoor unit again.

2.2.7 Compressor overload protection

If the compressor overload switch is detected having movement, the indoor unit will display the corresponding malfunction as it stops when the indoor temperature reaching set temperature. When the compressor stops for more than 3min and the compressor overload switch is reset, the unit will resume operation status automatically. If the protection appears for more than 6 times (if the running time of the compressor is longer than 30min, the protection times record will be cleared), the unit can not resume operation status automatically, but can resume running only after cutting off the power and then putting through the power.

2.3 Other function

2.3.1 Refrigerant Recovery

The refrigerant can be recovered from the outdoor unit. When the unit is powered on and runs under the COOL mode, it is available within five minute to go the refrigerant recovery mode by operate the testing board of the outdoor unit with "Fo" displayed.

2.3.2 How to quit the refrigerant recovery:

When the refrigerant recovery has started, it will quit by operate the testing board of the outdoor unit or the power is cut off.

2.4 Control Function of Indoor Unit

2.4.1 Running Mode

1. COOL 2.DRY 3.HEAT 4.AUTO 5 FAN

2.4.2 Basic Functions of the System

1) COOL Mode

Under this mode, the fan and swing function goes as the set conditions, and the set temperature range is 16℃ ~30℃.

2) DRY Mode

Under this mode, the fan will run at the low speed and the swing function is performed under the set conditions. The set temperature range is 16~30℃.

3) FAN Mode

Under this mode, only the fan of the indoor unit runs. And if the auto speed is set, the fan will run under the same condition as the COOL mode.

4) HEAT Mode

a) Under this mode, the set temperature range is 16℃~30℃.

b) The defrosting symbol "H1" will be displayed when the defrosting signal is received from the outdoor unit.

5) AUTO Mode

a) When the ambient temperature is higher than 25℃, the unit will run as the COOL mode.

b) For the cooling and heating unit, if the ambient temperature is or lower than 22℃, the unit will run as the HEAT mode.

c) When the indoor ambient temperature is higher than 22℃ but lower than 26℃, the unit which starts to work under the AUTO or DRY mode will shift to the FAN mode, while the unit which starts to work under other mode will keep the current running mode.

2.4.3 Other Control

1) Beeper Control

When the controller is powered on or it receives a valid either press button signal or remote control signal, the beeper will utter a warning tone.

2) Auto Speed Control

a). Under the HEAT mode:

- If the ambient temperature is equal or higher than the set temperature, the fan will run at the low speed;
- If the ambient temperature minus 3℃ is equal or lower than the set temperature, the fan will run at the medium speed;
- If the ambient temperature minus 3℃ is lower than the set temperature minus 3℃, the fan will run at the high speed.

b). Under the COOL mode:

- If the ambient temperature is equal to or lower than the set temperature, the fan will run at the low speed;
- If the ambient temperature is between the set temperature and the set temperature minus 3℃, the fan will run at the medium speed;
- If the ambient temperature is higher than the set temperature plus 3℃, the fan will run at the high speed.

c). Under the FAN mode:

- The fan will run at the medium speed constantly.
- Once the fan starts, its speed cannot be changed unit it has run for at least 30 seconds at the currently set

speed.

d) Under the HEAT Mode: (Ambient temperature herein is the temperature without temperature compensation)

- When the ambient temperature is or lower than the set temperature, the indoor unit runs at the high speed.
- When the ambient temperature is higher than the set temperature but lower than the set temperature plus 2℃, the indoor unit fan runs at the medium speed.
- When the ambient temperature is or lower than the set temperature plus 2℃, the fan runs at the low speed.

e) Under the COOL and FAN Modes

- When the ambient temperature is or higher than the set temperature plus 3℃, the indoor unit runs at high speed.
- When the ambient temperature is higher than the set temperature plus 1℃, but lower than the set temperature plus 3℃, the indoor unit fan runs at the medium speed.
- When the ambient temperature is or lower than the set temperature plus 1℃, the fan runs at the low speed.

f) Once the fan starts at a certain speed, it will keep running at this speed for no less than 30 seconds prior to any changeover stated above.

3) AUTO Press Button

The whole unit will run under the AUTO mode by pressing this button when the unit is off. In this condition, the fan of the indoor unit will run at the auto speed with the swing function activated. When the unit is on, it will be turned off by pressing this button. This button is unavailable to the floor/ceiling unit.

4) Sleep

Under this mode, the proper sleep curve will be adopted in accordance with different set temperatures.

Under the COOL mode or the DRY mode, the temperature will go up by 1℃ after one hour and by another 1℃ after another hour, after that, the temperature will be kept on.

Under the HEAT mode, the temperature will go down by 1℃ after one hour and by another 1℃ after another hour, after that, the temperature will be kept on.

5) Timer

a) Timer On

When the unit is powered on but in the idle condition, it is available to set when to start the unit. Then, when the unit starts, it will run as the previously set mod. The set range of the timer is 0.5～24 hours with a interval of 0.5 hour.

b) Timer Off

When the unit is on, it is available to set when to stop the unit. The set range of timer is 0.5～24 hours with a interval of 0.5 hour.

6) Memory

a) Memorizing Objects: modes (AUTO, COOL, DRY, FAN, HEAT), swing, set temperature, set fan speed, etc.

b) When the indoor unit works without the wired controller, it will resume the working condition as the power failure occurs after it is powered on again. When the indoor unit is with the wired controller, it is available to set the memory function by pressing the corresponding buttons of the wired controller.

c) When the indoor unit works without the wired controller, if the timer is not set for the last remote control instruction, the system will memorize this last instruction and works following it; if the timer is set, it will be canceled as the power failure occurs and will have to be reset.

d) When the indoor unit works with the wired controller, it will work as the message sent by the wired controller after it is powered on again.

7) Selection of the Indoor Temperature Sensor

a) For the duct type indoor unit: Under the COOL, HEAT, DRY, or FAN mode, the return air temperature sensor is adopted; while under the HEAT mode, it is the receiver temperature sensor.

For the cassette type, floor ceiling type indoor unit: Under all modes, the return air temperature sensor is adopted.

b) When the duct type, cassette type, or the floor ceiling type indoor unit works with the wired controller, the ambient temperature sensor can be set in the following four ways:

01: The indoor temperature sensor is set for the return air.

02: The indoor temperature sensor is set for the wired controller.

03: The indoor temperature sensor is set for the wired controller under the HEAT mode, and for the return air under any other mode.

04: The indoor temperature sensor is set for the return air under the HEAT mode, and for the wired controller under any other mode.

c) Setting of the Ambient Temperature Sensor of the Wired Controller XK19.

- When the unit is off, it is available to go to the debugging status by pressing the “Function” and “Timer” buttons for five seconds, and the corresponding code will be displayed on the temperature area of the wired controller. There are four kinds of codes which can be adjusted through the “▼”/“▲” button.
- The 03 is the default code. The setting of the ambient temperature sensor of the wired controller should be memorized.
- The “Enter/Cancel” button shall be pressed to confirm and leave the setting. If there is no response to the last button press within 20 seconds, then the system will quit the setting and go to the normal “Off” status but with the setting still saved.

8) Switchover of the Defrosting Mode

On condition that the unit is off, if “H1” is not displayed on the wireless controller, then the unit will go to the setting status of the “Defrosting Mode 1”as it is turned on through the wired controller. Then, once the indoor unit receives this signal, it will soon send it to the outdoor unit. In contract, if “H1”is displayed, the unit will go the setting status of the “Defrosting Mode 2”, and the indoor unit also will send this signal to the outdoor unit as soon as it receives it.

On condition that the unit is off, it is available to switch over the “Defrosting Mode 1” and “Defrosting Mode 2” by pressing the “MODE” and “BLOW” buttons simultaneously.

9) Turbo

As soon as the controller receives the “Turbo” instruction, the fan of the indoor unit will run at the high speed.

10) Blow

Blow Function: It is a function to automatically blow off the moist inside the exchanger of the indoor unit to prevent mould growing after the unit is shut off.

a) On condition that this function is activated, when the “On/Off” press button is operated, the fan of the indoor unit will still run for ten minutes (with the symbol “BLOW” displayed). At this time, the fan will stop as this function is deactivated.

b) This function is unavailable under the AUTO, FAN, and HEAT modes.

3 REMOTE CONTROLLER

3.1 Wired Remote Controller

3.1.1 Wired Controller XK19 (Z63351L)

It is designed for the cassette type, duct type and floor ceiling type indoor units.

◆ Outside View of the Wired Controller

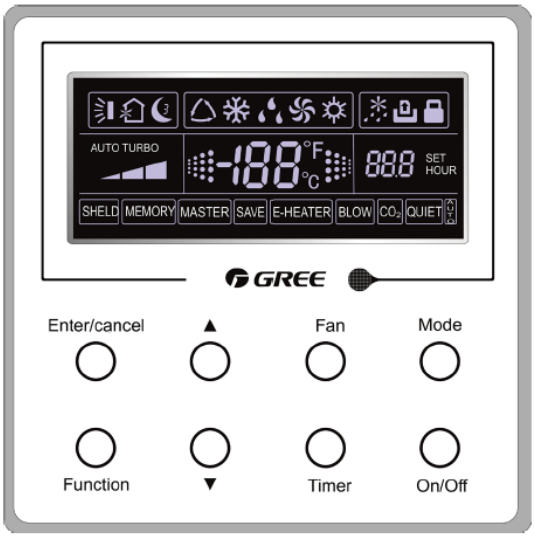

◆ LCD of the Wired Controller

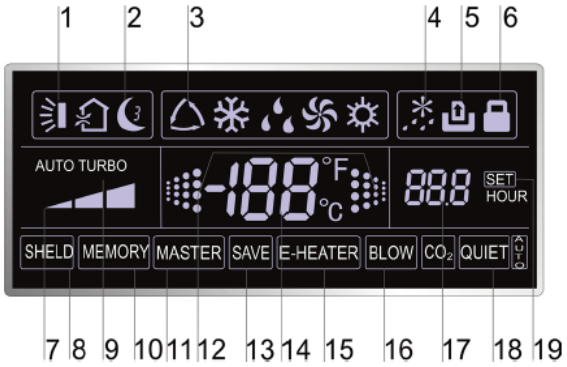

No.	Symbols	Description
1		Swing function.
2		Sleep function
3		Running modes of the indoor unit (Cooling, Dry, Fan, Heating and Auto).
4		Defrosting function for the outdoor unit.
5		Gate-control function.(this function is yet unavailable for this unit)
6		Lock function.
7		High, middle, low or auto fan speed of the indoor unit.
8	SHIELD	Shield functions (buttons, temperature, On/Off, Mode or Save is shielded or Save is shielded by the remote monitor)
9	TURBO	Turbo function.
10	MEMORY	Memory function (The indoor unit resumes the original setting state after power failure and then power recovery).

11	MASTER	Master wired controller (this function is yet unavailable for this unit).
12		It blinks under on state of the unit without operation of any button.
13	SAVE	Energy-saving function.(this function is yet unavailable for this unit)
14	-188	Ambient/preset temperature value.
15	E-HEATER	Electric auxiliary heating function.(this function is yet unavailable for this unit)
16	BLOW	Blow function.
17	88.8	Timing value.
18	QUIET	Quiet function (two types: quiet and auto quiet).(this function is yet unavailable for this unit)
19	SET	It will be displayed under the debugging mode.

3.1.2 Buttons

Buttons on the Wired Controller

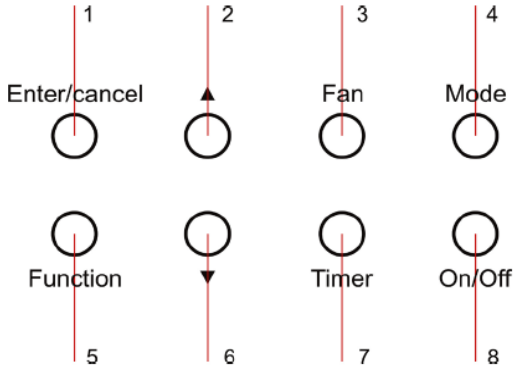

No.	Name	Function
1	Enter/cancel	① Function selection and cancellation. ② Press it for 5s to examine the outdoor ambient temperature.
2	▲	① Running temperature setting of the indoor unit, range:16～30℃. ② Timer setting, range:0.5-24 hr.
6	▼	
3	Fan	Setting of the high/middle/low/auto fan speed.
4	Mode	Setting of the Cooling/Heating/Fan/Dry mode of the indoor unit.
5	Function	Switchover among the functions of Swing/Sleep/Turbo/Save/E-heater/Blow /Quiet etc.
7	Timer	Timer setting.
8	On/Off	Turn on/off the indoor unit.
4+2	▲+Mode	Press them for 5s under off state of the unit to enter/cancel the Memory function (If memory is set, indoor unit after power failure and then power recovery will resume the original setting state. If not, the indoor unit is defaulted to be off after power recovery. Memory off is default before delivery.).
3 +6	Fan+▼	By pressing them at the same time under off state of the unit, will be displayed on the wired remote controller for the cooling only unit, while will be displayed on the wired remote controller for the cooling and heating unit.
2 +6	▲+▼	Upon startup of the unit without malfunction or under off state of the unit, press them at the same time for 5s to enter the lock state, in which case, any other buttons won't respond the press. Repress them for 5s to quit this state.

3.1.3 Operation Instructions

1) On/Off

Press On/Off to turn on the unit and turn it off by another press.

2) Mode Setting

Under the “On” state of the unit, press Mode to switch the operation modes as the following sequence: Cooling-Dry-Fan-Heating.

3) Temperature Setting

Press ▲ or ▼ to increase/decrease the preset temperature. If press either of them continuously, the temperature will be increased or decreased by 1℃ every 0.5s.

In the Cooling, Dry or Heating mode, the temperature setting range is 16℃～30℃.

In the Fan mode, the setting temperature is fixed at 26℃.

In the Auto mode, the setting temperature is unadjustable.

4) Fan Setting

Under the “On”/“Off” state of the unit, press Fan and then fan speed of the indoor unit will change circularly.

5) Timer Setting

Under the “On”/“Off” state of the unit, press Timer to set timer off/on.

Timer on setting: press Timer, and then LCD will display “xx.x hour”, with “hour” blinking. In this case, press ▲ or ▼ to adjust the timing value. Then press Enter/cancel to confirm the setting.

Timer off setting: press Timer, if LCD won’t display xx.x hour, and then it means the timer setting is canceled.

Timer range: 0.5-24hr. Every press of ▲ or ▼ will make the set time increased or decreased by 0.5hr. If either of them is pressed continuously, the set time will increase/ decrease by 0.5hr every 0.5s.

6) Swing Setting

Swing On: Press Function under on state of the unit to activate the swing function. In this case, it will blink. After that, press Enter/cancel to make a confirmation.

Swing Off: When the Swing function is on, press Function to enter the Swing setting interface, with blinking. After that, press Enter/cancel to cancel this function.

Notes:

a. Sleep, Save, Turbo, Blow or Quiet setting is the same as the Swing setting.

b. After the setting has been done, it has to press the key “Enter/cancel” to back to the setting status or quit automatically five seconds later.

7) Sleep Setting

Sleep on: Press Function under on state of the unit till the unit enters the Sleep setting interface. After that, press Enter/cancel to confirm the setting.

Sleep off: When the Sleep function is activated, press Function to enter the Sleep setting interface. After that, press Enter/cancel to can this function.

Sleep off is default after power failure and then power recovery, and the sleep functions is unavailable under the fan mode.

Sleep mode

In the Cooling or Dry mode, the temperature will increase by 1℃ after the unit runs under Sleep 1 for 1 hr and 1℃ after another 1hr.After that, the unit will run at this temperature.

In the Heating mode, the temperature will decrease by 1℃ after the unit runs under Sleep 1 for 1hr and 1℃ after another 1hr. After that, the unit will run at this temperature.

Notes:

a. During the above setting, if Function is pressed down or there is not any operation within 5s, sleep curve setting will be canceled.

b. 26℃ is the default Sleep curve temperature before delivery. The wired controller will automatically memorize the Sleep curve after the setting.

8) Turbo Setting

Turbo function: The unit at the high fan speed can realize quick cooling or heating so that the room temperature can quickly approach the setting value.

In the Cooling or Heating mode, press Function till the unit enters the Turbo setting interface and then press Enter/Cancel to confirm the setting.

When the Turbo function is activated, press Function to enter the Turbo setting interface and then press Enter/Cancel to cancel this function.

Notes:

a. When the Turbo function is activated, if the difference between the room temperature and set temperature is at or below 2℃ (detected in successive 1 min.), the Turbo function will be automatically deactivated.

b. Turbo function is unavailable in the Dry and Fan mode. And the Turbo function is off after power failure and then power recovery. If Quiet function is on, Turbo function will be canceled subsequently.

9) E-heater Setting

E-heater (auxiliary electric heating function): In the Heating mode, E-heater is allowed to be turned on for improvement of efficiency.

Once the wired controller or the remote controller enters the Heating mode, this function will be turned on automatically.

Press Function in the Heating mode to enter the E-heater setting interface and then press Enter/cancel to cancel this function.

Press Function to enter the E-heater setting interface, if the E-heater function is not activated, and then press Enter/Cancel to turn it on.

10) Blow Setting

Blow function: After the unit is turned off, the water in evaporator of indoor unit will be automatically evaporated to avoid mildew.

In the Cooling or Dry mode, press Function till the unit enters the Blow setting interface and then press Enter/Cancel to active this function.

When the Blow function is activated, press Function to the Blow setting interface and then press Enter/Cancel to cancel this function.

Notes:

a. When the Blow function is activated, if turning off the unit by pressing On/Off or by the remote controller, the indoor fan will run at the low fan speed for 10 min, with “BLOW” displayed on the LCD. While, if the Blow function is deactivated, the indoor fan will be turned off directly.

b. Blow function is unavailable in the Fan or Heating mode.

11) Other Functions

◆ Lock

Upon startup of the unit without malfunction or under the “Off” state of the unit, press ▲ and ▼ at the same time for 5s till the wired controller enters the Lock function. In this case, LCD displays. After that, repress these two buttons at the same time for 5s to quit this function.

Under the Lock state, any other button press won’t get any response.

◆ Memory

Memory switchover: Under the “Off” state of the unit, press Mode and ▲ at the same time for 5s to switch memory states between memory on and memory off. When this function is activated, Memory will be displayed. If this function is not set, the unit will be under the “Off” state after power failure and then power recovery.

Memory recovery: If this function has been set for the wired controller, the wired controller after power

failure will resume its original running state upon power recovery. Memory contents: On/Off, Mode, set temperature, set fan speed, Save function and Lock function.

◆ Enquiry of the Outdoor Ambient Temperature

Under the “On” or “Off” state of the unit, press Enter/Cancel for 5s, and the outdoor ambient temperature will be displayed after a sound of click. This enquiry state will quit by pressing Function or On/Off or during the temperature adjustment. If there is not any operation for 10s, it will also quit automatically.

3.1.4 Errors

If there is an error occurring during the operation of the system, the error code will be displayed on the LCD. If multi errors occur at the same time, their codes will be displayed circularly.

Note: In event of any error, please turn off the unit and contact the professionally skilled personnel.

Error	Error Code
High pressure protection	E1
Low pressure protection	E3
Discharge protection	E4
Over-current protection	P5
Communication error	E6
Indoor water overflow protection	E9
Mode conflict	E7
Anti-freezing protection	E2
Defrosting or oil returning for heating	H1
Indoor ambient temperature sensor open/short circuit	F1
Evaporator temperature sensor open/short circuit	F2
Indoor unit (liquid valve) refrigerant pipe inlet temperature sensor error	b5
Indoor unit (gas valve) refrigerant pipe outlet temperature sensor error	b7
Condenser coil inlet temperature sensor open/short circuit	A5
Condenser coil midway temperature sensor error	F4
Condenser coil outlet temperature senor open/short circuit	A7
Discharge air temperature sensor error	F5
Outdoor ambient temperature sensor error	F3
Module temperature sensor error	oE
Outdoor unit overall error	oE

3.2 Wireless Remote Controller YT1F (MOTO)

Notes:

a. Be sure that there are no obstructions between the receiver and the remote controller;

b. Do not drop or throw the remote controller;

c. Do not let any liquid into the remote controller and expose the remote controller to direct sunlight or any place where is very hot.

d. This is a general use remote controller. If press some button which is not available for the corresponding function, the unit will keep the original running status.

3.2.1 Function of Press Buttons

1) ON/OFF (⏻)

Press this button to turn on/off the unit. After that, the sleep function will be canceled but the preset time is still remained.

2) －

The preset temperature can be decreased by pressing this button. If the button is pressed down for more than 2 seconds, the temperature will be decreased quickly until it is released, with ℃ (℉) displayed all the time. Under Auto mode, the temperature adjustment is unavailable.

3) ＋

The preset temperature can be increased by pressing this button. If the button is pressed down for more than 2 seconds, the temperature will be increased quickly until it is released, with ℃(℉) displayed all the time. Under Auto mode, the temperature adjustment is unavailable. The setting range is 16-30 ℃ or 61-86℉

4) FAN

Auto, Low, Middle, or High fan speed can circularly selected by pressing this button. After powered on, the default is Auto speed. Under Dehumidifying mode, only Low fan speed is available.

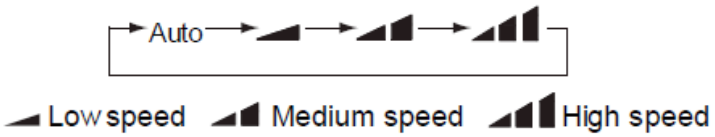

5) MODE

Auto, Cool, Dry Fan, Heat modes can be selected circularly by pressing this button. Auto mode is the default after power on. Under Auto mode, the temperature will not be displayed. Under Heat mode, the initial value is 28 ℃(82℉); Under other modes, the initial value is 25℃(77℉).

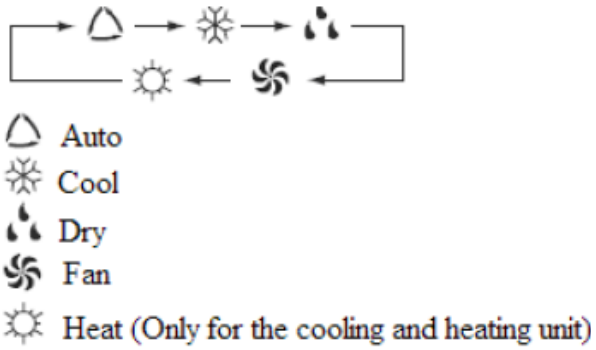

6) I FEEL

This function can be activated by pressing this button and canceled by another press. When this function is on, the I FEEL information will be sent out in 200ms after each operation on the controller and the remote controller will send the temperature information to the main controller every 10 minutes.

7) HEALTH ( )

This function can be activated or deactivated by pressing this button. After the unit is turned on, the default is HEALTH ON.

8) AIR ( )

AIR ON or Air OFF can be selected by pressing this button.

9) CLOCK

The clock can be set up by pressing this button, with the symbol displayed and blinking. In such a case, pressing ＋ or － within 5 seconds can adjust the value. If the button is pressed down for more than 2 seconds, the value on ten's place will increase by 1 in every 0.5 seconds. After that, repressing this button and then symbol stops blinking, which indicates the setting is made successfully. After powered on, the default value is 12:00 with displayed. Once the symbol is displayed, the current time is the Clock value; otherwise it is the Timer value.

10) TIMER ON

“ON” will be displayed and blink for 5 seconds by pressing this button, and soon adjust the time by pressing ＋ or － within 5 seconds. Each press will make the time increased or decreased by 1 minute. If the button is pressed down for more than 2 seconds, the time will be changed quickly in such a way: firstly the value on the one’s place is changed and then is the value on the ten’s place. Once Timer ON has been set already, it can be canceled by repressing it. Before the setting, please adjust the CLOCK to the current actual time.

11) SWING UP/DOWN ( )

The swing angle which circularly changes as below can be selected by pressing this button:

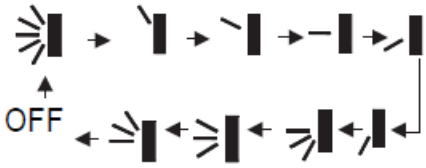

This kind of remoter controller is universal. And the three swing statuses of are the same as that of .

If the swing function is deactivated when the air guide louver is swing up and down, it will stop at the current position indicates that the air guide louver swings up and down among all five positions.

indicates that the air guide louver swings up and down among all five positions.

12) X-FAN

Pressing X-FAN button in COOL or DRY mode, the icon is displayed and the indoor fan will continue operation for 10 minutes in order to dry the indoor unit even though you have turned off the unit.

After energization, X-FAN OFF is defaulted. X-FAN is not available in AUTO, FAN or HEAT mode.

13) TEMP

It can be decided by pressing this button which temperature will be displayed, indoor set temperature, or indoor ambient temperature. When the indoor unit is powered on, the indoor set temperature will be displayed, while if the status is changed to, the indoor ambient temperature will be displayed. However, the indoor set temperature will be displayed again when the controller receives other remote controls signals. Without setting this function, the default is the indoor set temperature.

14) TIMER OFF

TIME OFF can be activated by pressing this button, with “OFF” blinking. The method of setting is the same as that for TIMER ON.

15) TURBO

In Cool or Heat mode, pressing this button can activate or deactivate this function. When this function is on, its symbol will be displayed. Any change of either mode or fan speed will make this function canceled automatically.

16) SLEEP

Sleep On and Sleep Off can be selected by pressing this button. After powered on, the default is Sleep Off. After the unit is turned off, the Sleep function is canceled. When the sleep function is set already, the symbol will be displayed. And at this time, the time of timer can be adjusted. Under Fan and Auto modes, this function is not available.

17) LIGHT

Light On and Light Off can be set by pressing this button when the unit is at On or Off status. After powered on, the default is Light On.

3.2.2 Guide for General Operation

1) After powered on, press ON/OFF and then the unit will start to run.

Note:

when powered off, the guide louver of the main unit will close automatically.

2) Press MODE to select the desired running mode.

3) Press ＋ or － to set the desired temperature (it is unnecessary to set the temperature under the AUTO mode.)

4) Press FAN to set the fan speed, Auto, Low, Medium, or High.

5) Press to select the swing angle.

3.2.3 Guide for Optional Operation

1) About X-FAN

This function indicates that moisture in the evaporator of the indoor unit will be dried after the unit is stopped to avoid mould.

- X-FAN ON: When press the ON/OFF button to turn off the unit, the indoor fan will continue running for about another 10 minutes at the low speed. In this case, the indoor fan can be stopped directly by pressing the button X-FAN.
- X-FAN OFF: When press the ON/OFF button to turn off the unit, the whole unit will be stopped completely.

2) About AFTERHEAT X-FAN

Under the Heat mode or Auto Heat mode, if the unit is turned off, the compressor and outdoor fan will stop running immediately and the upper and lower guide board will rotate to the horizontal position, while the indoor fan will still run at the low fan speed. Then, 10 seconds later, the unit will stop completely.

3) About AUTO RUN

When AUTO RUN is selected, the setting temperature will not be displayed on the LCD and the unit will choose the suitable running mode automatically in accordance with the room temperature.

- About TURBO

If this function is activated, the unit will run at super-high fan speed to cool or heat quickly so that the ambient temperature will approaches the preset temperature as soon as possible.

3.3 Wireless Remote Controller YAA1FB1

Notes:

a. Be sure that there are no obstructions between the receiver and the remote controller;

b. Do not drop or throw the remote controller;

c. Do not let any liquid into the remote controller and expose the remote controller to direct sunlight or any place where is very hot.

d. It is only use for U-Cool and Console type indoor units. If press some button which is not available for the corresponding function, the unit will keep the original running status.

3.3.1 Function of Press Buttons

1) ON/OFF

Press this button to turn on the unit. Press this button again to turn off the unit.

2) －

Press this button to decrease set temperature. Holding it down above 2 seconds rapidly decreases set temperature. In AUTO mode, set temperature is not adjustable.

3) ＋

Press this button to increase set temperature. Holding it down above 2 seconds rapidly increases set temperature. In AUTO mode, set temperature is not adjustable.

4) MODE

Each time you press this button, a mode is selected COOL, DRY, FAN, and HEAT *, as the following:

***Note:** Only for models with heating function.

After energization, AUTO mode is defaulted. In AUTO mode, the set temperature will not be displayed on

the LED of the indoor, and the unit will automatically select the suitable operation mode in accordance with the room temperature to make indoor room comfortable.

5) FAN

This button is used for setting Fan Speed in the sequence that goes from AUTO, , , , , , then back to Auto.

Low speed Low-Medium speed Medium speed

Medium-High speed High speed

6) SWING

Press this button to set up &down swing angle, which circularly changes as below:

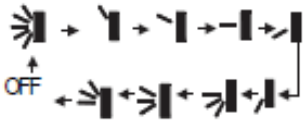

This remote controller is universal. If any command , or is sent out, the unit will carry out the command as

indicates the guide louver swings as:

7) I FEEL:

Press this button to turn on I FEEL function. The units automatically adjust temperature according to the sensed temperature. Press this button again to cancel I FEEL function.

8) /

Press this button to achieve the on and off of healthy and scavenging functions in operation status. Press this button for the first time to start scavenging function; LCD displays“”. Press the button for the second time to start healthy and scavenging functions simultaneously; LCD displays“” and “”. Press this button for the third time to quit healthy and scavenging functions simultaneously. Press the button for the fourth time to start healthy function; LCD display “”. Press this button again to repeat the operation above.

9) SLEEP:

- Press this button, can select Sleep 1 (1), Sleep 2 (2), Sleep 3 (3) and cancel the Sleep, circulate between these, after electrified, Sleep Cancel is defaulted.
- Sleep 1 is Sleep mode 1, in Cool or dry mode: sleep status after run for one hour, the main unit setting temperature will increase 1℃, after 2 hours the setting temperature will increase 2℃, but the maximal setting temperature is 30℃, then the unit will run at this setting temperature all along; In Heat mode: sleep status after run for one hour, the setting temperature will decrease 1℃, after 2 hours the setting temperature will decrease 2℃, but the minimal setting temperature is 16℃, then the unit will run at this setting temperature.
- Sleep 2 is sleep mode 2, that is air conditioner will run according to the presetting a group of sleep temperature curve.

- Sleep 3- the sleep curve setting under Sleep mode by DIY:
  ① Under Sleep 3 mode, press "Turbo" button for a long time, remote control enters into user individuation sleep setting status, at this time, the time of remote control will display "1hour ", the setting temperature "88" will display the corresponding temperature of last setting sleep curve and blink (The first entering will display according to the initial curve setting value of original factory);
  ② Adjust "+" and "-" button, could change the corresponding setting temperature, after adjusted, press "Turbo" button for confirmation;
  ③ At this time, 1 hour will be automatically increased at the timer position on the remote control, (that are "2 hours " or "3 hours " or "8 hours "), the place of setting temperature "88"will display the corresponding temperature of last setting sleep curve and blink;
  ④ Repeat the above step (2) ～ (3) operation, until 8 hours temperature setting finished, sleep, curve setting finished, at this time, the remote control will resume the original timer display; temperature display will resume to original setting temperature.

Sleep3- the sleep curve setting under SLEEP mode by DIY could be inquired:

- The user could accord to sleep curve setting method to inquire the presetting sleep curve, enter into user individuation sleep setting status, but do not change the temperature, press "Turbo" button directly for confirmation.

Note: In the above presetting or enquiry procedure, if continuously within 10s, there is no button pressed, the sleep curve setting within 10s, there is no button pressed, the sleep curve setting status will be automatically quit and resume to display the original displaying. In the presetting or enquiry procedure, press "ON/OFF" button, "Mode" button, "Timer" button or "Sleep" button, the sleep curve setting or enquiry status will quit similarly.

10) TEMP:

Press this button, could select displaying the indoor setting temperature or indoor ambient temperature. When the indoor unit firstly power on it will display the setting temperature, if the temperature's displaying status is changed from other status to" ",displays the ambient temperature, 5s later or within 5s, it receives other remote control signal that will return to display the setting temperature. If the users haven't set up the temperature displaying status, that will display the setting temperature.

11) QUIET:

Press this button, the Quiet status is under the Auto Quiet mode (display "signal) and Quiet mode (display " " signal) and Quiet OFF (there is no signal of "displayed),after powered on, the Quiet OFF is defaulted.

Note: the Quiet function cannot be set up in Fan and Dry mode; Under the Quiet mode

(Display " " Under the Quiet mode (Display " " signal), the fan speed is not available.

12) CLOCK :

Press CLOCK button, blinking . Within 5 seconds, pressing ＋ or － button adjusts the present time. Holding down either button above 2 seconds increases or decreases the time by 1 minute every 0.5 second and then by 10 minutes every 0.5 second. During blinking after setting, press CLOCK button again to confirm the setting, and then will be constantly displayed.

13) T-ON/ T-OFF:

Press T-ON button to initiate the auto-ON timer. To cancel the auto-timer program, simply press this button again.

After press of this button, disappears and "ON "blinks. 00:00 is displayed for ON time setting. Within 5 seconds, press + or - button to adjust the time value. Every press of either button changes the time setting by 1 minute. Holding down either button rapidly changes the time setting by 1 minute and then 10 minutes. Within 5 Seconds after setting, press TIMER ON button to confirm.

Press T-OFF button to initiate the auto-off timer. To cancel the auto-timer program, simply press the button again. TIMER OFF setting is the same as TIMER ON.

14) TURBO:

Press this button to activate / deactivate the Turbo function which enables the unit to reach the preset temperature in the shortest time. In COOL mode, the unit will blow strong cooling air at super high fan speed. In HEAT mode, the unit will blow strong heating air at super high fan speed.

15) LIGHT:

Press LIGHT button to turn on the display's light and press this button again to turn off the display's light. If the light is turned on, is displayed. If the light is turned off, disappears.

16) X-FAN:

Pressing X-FAN button in COOL or DRY mode, the icon is displayed and the indoor fan will continue operation for 10 minutes in order to dry the indoor unit even though you have turned off the unit. After energization, X-FAN OFF is defaulted. X-FAN is not available in AUTO, FAN or HEAT mode.

3.3.2 Guide for General Operation

1) Combination of "＋"and "－" buttons: About lock

Press "＋" and "－" buttons simultaneously to lock or unlock the keypad. If the remote controller is locked, is displayed. In this case, pressing any button, blinks three times.

2) Combination of "MODE " and "－" buttons :

About switch between Fahrenheit and centigrade At unit OFF, press "MODE" and "－" buttons simultaneously to switch between ℃ and ℉.

3) Combination of " TEMP " and "CLOCK" buttons : About Energy-saving Function

Press “TEMP” and “CLOCK” simultaneously in COOL mode to start energy-saving function. Nixie tube on the remote controller displays “SE”. Repeat the operation to quit the function.

4) Combination of "TEMP " and "CLOCK" buttons: About 8℃ Heating Function

Press “TEMP” and “CLOCK” simultaneously in HEAT mode to start 8℃ Heating Function Nixie tube on the remote controller displays “$” and a selected temperature of “8℃”. (46℉ if Fahrenheit is adopted). Repeat the operation to quit the function.

5) About Back-lighting Function

The unit lights for 4s when energizing for the first time, and 3s for later press.

3.4 Wireless Remote Controller YAG1FB

Notes:

a. Be sure that there are no obstructions between the receiver and the remote controller;

b. Do not drop or throw the remote controller;

c. Do not let any liquid into the remote controller and expose the remote controller to direct sunlight or any place where is very hot.

d. This is only use for Hansol indoor unit. If press some button which is not available for the corresponding function, the unit will keep the original running status.

3.4.1 Function of Press Buttons

1) ON/OFF

Press this button to turn on the unit. Press this button again to turn off the unit. Sleep function will be canceled, while unit off.

2) MODE

Press this button, Auto, Cool, Dry, Fan, Heat mode can be selected circularly. Auto mode is default while powered on. Under Auto mode the temperature will not be displayed; Under Heat mode, the initial value is 28℃ (82 ℉); Under other modes, the initial value is 25℃(77 ℉).

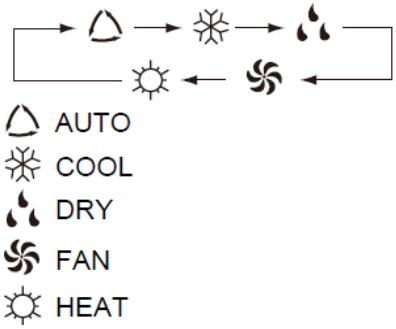

3) FAN

Press this button, Auto, Low, Medium-low, Medium, Medium-high, High speed can be circularly selected. After powered on, Auto fan speed is default. Under DRY mode, Low fan speed only can be set up.

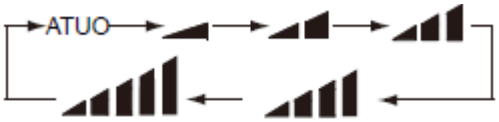

Low fan Low-Medium fan Medium fan

Medium-High fan High fan

Note: It's Low fan speed under Dry mode.

4) TEMP

Press this button, the following temperature can be set circularly: the setting temperature, indoor ambient temperature and outdoor ambient temperature. When the indoor unit firstly power on, it will display the setting temperature . If the displaying status is changed to , displaying the indoor ambient temperature. is the outdoor ambient temperature. 5s(3s) later it will return to the setting temperature or it depends on the other received signal within 5s(3s).

Note: Outdoor ambient temperature display range is 0~60℃ (32~99℉). As for the outdoor ambient temperature below 0 it displays 0℃(32℉).

" " function is applicable to partial of models.

Warm tips: When operating buttons on the cover, please make sure the cover is closed completely.

5) CLOCK :

Press this button, the clock can be set up, signal blink and display. Within 5 seconds, the value can be adjusted by pressing ＋ or－ button, if continuously press this button for 2 seconds above, in every 0.5seconds, the value on ten place of Minute will be increased 1. During blinking, repress the Clock button or Confirm button, signal will be constantly displayed and it denotes the setting succeeded. After powered on, 12:00 is defaulted to display and signal will be displayed. If there is signal be displayed that denotes the current time value is Clock value, otherwise is Timer value.

6) LIGHT:

Press LIGHT button at unit On or Off status, Light On and Light Off can be set up. After powered on, Light On is defaulted.

7) TURBO:

Under Cool or Heat mode, press this button can turn on or turn off the Turbo function. After the Turbo function turned on, the signal of Turbo will display. The signal will be automatically cancelled if changing the mode or fan speed.

8) X-FAN:

Pressing X-FAN button in COOL or DRY mode, the icon is displayed and the indoor fan will continue operation for 10(2) minutes in order to dry the indoor unit even though you have turned off the unit. After energization, X-FAN OFF is defaulted. X-FAN is not available in AUTO, FAN or HEAT mode.

9) ＋:

Presetting temperature can be increased. Press this button, the temperature can be set up, continuously press this button and hold for two seconds, the relative contents can quickly change, until unhold this button and send the order that the ℃(℉) signal will be displayed all the time. The temperature adjustment is unavailable under the Auto mode, but the order can be sent if pressing this button. Temperature of Celsius degree setting: 16-30;

10) —:

Presetting temperature can be decreased. Press this button, the temperature can be button set up, continuously press this button and hold for two seconds, the relative contents can quickly change, until unhold this button and send the order that the ℃(℉) signal will be displayed all the time. The temperature adjustment is unavailable under the Auto mode, but the order can be sent by if pressing this button.

11) QUIET:

Press this button, the Quiet status is under the Auto Quiet mode (display " "signal) and Quiet mode (display " " signal) and Quiet OFF (there is no signal of " "displayed),after powered on, the Quiet OFF is defaulted. Note: the Quiet function cannot be set up in Fan and Dry mode; Under the Quiet mode (Display " " Under the Quiet mode (Display " " signal), the fan speed is not available.

12) SWING UP and DOWN

Press this button to set up &down swing angle, which circularly changes as below:

This remote controller is universal. If it receives threes kinds of following status, the swing angle will remain original.

If guide louver is stopped when it is swinging up and down, it will remain its present position.

indicates guide louver swings back and forth in the five places, as shown in the figure.

13) SWING LEFT and RIGHT

Press this button to set left & right swing angle cycling as below:

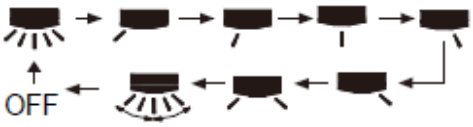

14) TIMER OFF

One press this key to enter into TIMER OFF setup, in which case the TIMER OFF icon will blink. The method of setting is the same as for TIMER ON.

15) TIMER ON

Timer On setting : Signal “ON” will blink and display, signal will conceal, the numerical section will become the timer on setting status. During 5 seconds blink, by pressing ＋ or － button to adjust the time value of numerical section, every press of that button, the value will be increased or decreased 1 minute. Hold pressing ＋ or － button, 2 seconds later , it quickly change, the way of change is: During the initial 2.5 seconds, ten numbers change in the one place of minute, then the one place is constant, ten numbers change in the tens place of minute at 2.5 seconds speed and carry. During 5s blink, press the Timer button, the timer setting succeeds. The Timer On has been set up; repress the timer button, the Timer On will be canceled. Before setting the Timer, please adjust the Clock to the current actual time.

16) I FEEL:

Press this button once, to turn on the I FEEL function, then the figure of "I FEEL" will be displayed, after every press of other function button, every 200ms to send I FEEL once, after this function started, the remote control will send temperature to the main un it in every 10 minutes. When repress this button, this function will be turned off.

17) / HEALTHY AND SCAVENGING

Press this button to achieve the on and off of healthy and scavenging functions in operation status. Press this button for the first time to start scavenging function; LCD displays“”. Press the button for the second time to start healthy and scavenging functions simultaneously; LCD displays “” and “”. Press this button for the third time to quit healthy and scavenging functions simultaneously. Press the button for the fourth time to start healthy function; LCD display “”. Press this button again to repeat the operation above.

Note: Optional for some models.

18) SLEEP:

- Press this button, can select Sleep 1 (1), Sleep 2 (2), Sleep 3 (3) and cancel the Sleep, circulate between these, after electrified, Sleep Cancel is defaulted.
- Sleep 1 is Sleep mode 1, in Cool or dry mode: after run for one hour in sleep mode, the main unit setting temperature will increase 1℃, after 2 hours, the setting temperature will increase 2℃, but the maximal setting temperature is 30℃, then the unit will run at this setting temperature all along; In Heat mode: after run for one hour in sleep mode, the setting temperature will decrease 1℃ after 2 hours the setting temperature will decrease 2℃, but the minimal setting temperature is 16℃, then the unit will run at this setting temperature all along.
- Sleep 2 is sleep mode 2, that is air conditioner will run according to the presetting a group of sleep temperature curve.

In Cool mode:

① When setting the initial temperature 16-23℃, after turned on Sleep function, the temperature will be increased 1℃ in every hour, after 3℃ the temperature will be maintained, after 7hours, the temperature will be decreased 1℃, after that the unit will keep on running under this temperature;

② When setting the initial temperature 24℃～27℃ , after turned on Sleep function, the temperature will be increased 1℃ in every hour, after 2℃ the temperature will be maintained, after 7hours, the temperature will be decreased 1℃, after that the unit will keep on running under this temperature;

③ When setting the initial temperature 28℃～29℃, after turned on Sleep function, the temperature will be increased 1℃ in every hour, after 1℃ the temperature will be maintained, after 7hours, the temperature will be decreased 1℃, after that the unit will keep on running under this temperature;

④ When setting the initial temperature 30℃, under this temperature setting, after 7hours, the temperature will be decreased 1℃, after that the unit will keep on running under this temperature;

In Heat mode:

① Under the initial presetting temperature 16℃, it will run under this setting temperature all along.

② Under the initial presetting temperature17℃～20℃, after Sleep function started up, the temperature will decrease 1℃ in every hour, after 1℃ decreased, this temperature will be maintained.

③ Under the initial presetting temperature 21℃～27℃, after Sleep function started up, the temperature will decrease 1℃ in every hour, after 2℃ decreased, this temperature will be maintained.

④ Under the initial presetting temperature 28℃～30℃, after Sleep function started up, the temperature

will decrease 1℃ in every hour, after 3℃ decreased, this temperature will be maintained.

◆ Sleep 3- the sleep curve setting under Sleep mode by DIY:

① Under Sleep 3 mode, press "Turbo" button for a long time, remote control enters into user individuation sleep setting status, at this time, the time of remote control will display "1hour ",

② Adjust "+" and "-" button, could change the corresponding setting temperature, after adjusted, press "Trubo" button for confirmation; the setting temperature "88" will display the corresponding temperature of last setting sleep curve and blink (The first entering will display according to the initial curve setting value of original factory);

③ At this time, 1hour will be automatically increased at the timer postion on the remote control, (that are "2hours " or "3hours " or "8hours "), the place of setting temperature "88"will display the corresponding temperature of last setting sleep curve and blink;

④ Repeat the above step (2) ～ (3) operation, until 8hours temperature setting finished, sleep, curve setting finished, at this time, the remote control will resume the original timer display; temperature display will resume to original setting temperature.

◆ Sleep3- the sleep curve setting under Sleep mode by DIY could be inquired:

The user could accord to sleep curve setting method to inquire the presetting sleep curve, enter into user individuation sleep setting status, but do not change the temperature, press "Turbo" button directly for confirmation.

Note: In the above presetting or enquiry procedure, if continuously within 10s, there is no button pressed, the sleep curve setting within 10s, there is no button pressed, the sleep curve setting status will be automatically quit and resume to display the original displaying. In the presetting or enquiry procedure, press "ON/OFF" button, "Mode" button, "Timer" button or "Sleep" button, the sleep curve setting or enquiry status will quit similarly.

3.4.2 Guide for General Operation

1) After powered on, press ON/OFF and then the unit will start to run.

(**Note:** when powered off, the guide louver of the main unit will close automatically).

2) Press MODE to select the desired running mode.

3) Press ＋ or － to set the desired temperature (it is unnecessary to set the temperature under the AUTO mode.)

4) Press FAN to set the fan speed, can select AUTO FAN, LOW, MEDIUM-LOW, MEDIUM, MEDIUM-HIGH and HIGH.

5) Press and to select the swing angle.

3.4.3 Guide for Optional Operation

1) Press SLEEP button, to set sleep.
2) Press TIMER ON and TIMER OFF button, can set the scheduled timer on timer off.
3) Press LIGHT button, to control the on and off of the displaying part of the unit (This function may be not available for some units).
4) Press TURBO button, can realize the ON and OFF of TURBO function.

3.4.4 Introduction for special Operation

◆ About X-FAN function

This function indicates that moisture on evaporator of indoor unit will be blowed after the unit is stopped to avoid mould.

① Having set X-FAN function on: After turning off the unit by pressing ON/OFF button indoor fan will continue running for about 10 (2) min. at low speed. In this period, press X-FAN button to stop indoor fan directly.

② Having set X-FAN function off: After turning off the unit by pressing ON/OFF button, the complete

unit will be off directly.

◆ About AUTO RUN

If start this function, the unit will run at super-high fan speed to cool or heat quickly so that the ambient temperature approaches the preset temperature as soon as possible.

◆ About lock

Press ＋ and － buttons simultaneously to lock or unlock the keyboard. If the and remote controller is locked, the icon will be displayed on it, in which case, press any button, the mark will flicker for three times. If the keyboard is unlocked, the mark will disappear.

◆ About swing up and down

① Press swing up and down button continuously more than 2s, the main unit will swing backand forth from up to down , and then loosen the button, the unit will stop swinging and present position of guide louver will be kept immediately.

② Under swing up and down mode, when the status is switched from off to , if press this button again 2s later, status will switch to off status directly; If press this button again within 2s, the change of swing status will also depend on the circulation sequence stated above.

◆ About swing left and right

① Press swing left and right button continuously more than 2s, the main unit will swing back and forth from left to right, and then loosen the button, the unit will stop swinging and present position of guide louver will be kept immediately.

② Under swing left and right mode, when the status is switched from off to , if press this button again 2s later, status will switch to off status directly; if press this button again within 2s, the change of swing status will also depend on the circulation sequence stated above.

◆ About switch between Fahrenheit and Centigrade

Under status of unit off, press MODE and - buttons simultaneously to switch ℃ and ℉.

◆ Combination of "TEMP" and "CLOCK" buttons: About Energy-saving Function

Press “TEMP” and “CLOCK” simultaneously in COOL mode to start energy-saving function. Nixietube displays “SE”. Repeat the operation to quit the function.

◆ Combination of " TEMP" and "CLOCK" buttons: About 8℃ Heating Function

Press “TEMP” and “CLOCK” simultaneously in HEAT mode to start 8℃ Heating Function Nixie tube on the remote controller displays “$” and a selected temperature of “8℃”. (46℉ if Fahrenheit is adopted). Repeat the operation to quit the function.

◆ About Quiet function

When quiet function is selected:

① Under cooling mode: indoor fan operates at notch 4 speed. 10 minutes later or when indoor ambient temperature≤28℃, indoor fan will operate at notch 2 speed or quiet mode according to the comparison between indoor ambient temperature and set temperature.

② Under heating mode: indoor fan operates at notch 3 speed or quiet mode according to the comparison between indoor ambient temperature and set temperature.

③ Under dry, fan mode: indoor fan operates at quiet mode.

④ Under auto mode: the indoor fan operates at the auto quiet mode according to actual cooling, heating or

fan mode.

◆ About Sleep function

Under the Fan and Auto mode, the Sleep function cannot be set up, under Dehumidify mode, only Sleep 1 can be selected. Select and enter into any kind of Sleep mode, the Quiet function will be attached and stared, different Quiet status could be optional and turned off.

3.5 Wireless Remote Controller YB1F2 (XFAN)

Notes:

a. Be sure that there are no obstructions between the receiver and the remote controller;

b. Do not drop or throw the remote controller;

c. Do not let any liquid into the remote controller and expose the remote controller to direct sunlight or any place where is very hot.

d. This is only use for change indoor unit. If press some button which is not available for the corresponding function, the unit will keep the original running status.

3.5.1 Function of Press Buttons

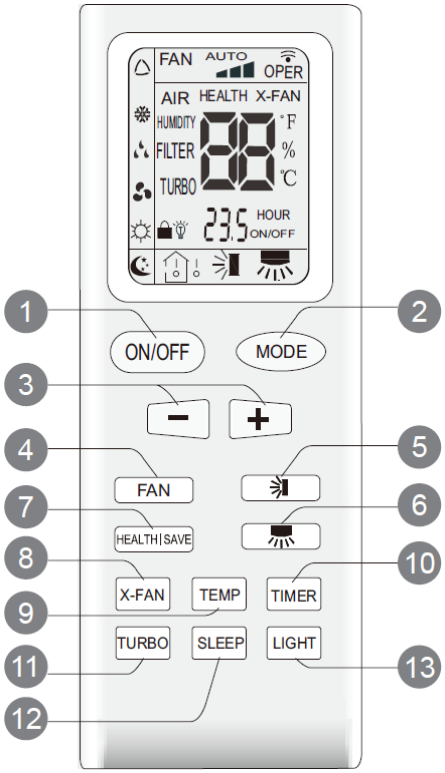

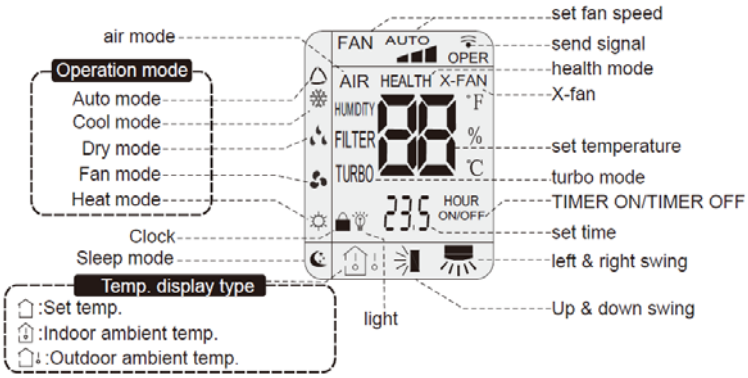

1) ON/OFF

Press this button can turn on or turn off the air conditioner. After turning on the unit, operation indicator "⏻" on indoor unit is ON (green indicator. Color may be different for different models) and indoor unit gives out a sound.

2) MODE

Press this button, Auto, Cool, Dry, Fan, Heat mode can be selected circularly.

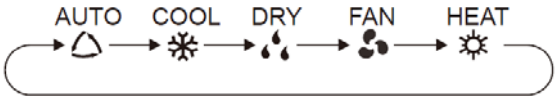

◆ After selecting auto mode, air conditioner will operate automatically according to ambient temperature. Set temperature can't be adjusted and also can't be displayed. Press "FAN" button can adjust fan speed.

Press "" button and "" button can adjust swing angle.

- After selecting cool mode, air conditioner operates under cool mode. Cool indicator "" on indoor unit is ON. You can press "＋" or "－" button to adjust set temperature. Press "FAN" button can adjust fan speed. Press "" button and "" button can adjust swing angle.
- After selecting dry mode, air conditioner operates under dry mode at low speed. Dry indicator "" on indoor unit is ON. Under dry mode, fan speed can't be adjusted. Press "" button and "" button to adjust swing angle.
- After selecting fan mode, air conditioner operates only under fan mode, All mode indicators on indoor unit is OFF. Press "FAN" button can adjust fan speed. Press "" button and "" button to adjust swing angle.
- After selecting heat mode, air conditioner operates under heat mode. Heat indicator "" on indoor unit is ON. You can press "＋" or "－" button to adjust set temperature. Press "FAN" button to adjust fan speed. Press "" button and "" button to adjust swing angle. (Cooling only unit can't receive the signal for heating mode.)

Note:

For preventing cold wind, after starting up heating mode, indoor fan will blow fan afterdelaying 1-5min. (Details time is decided by indoor ambient temperature) Temperature setting range on remote controller: 16℃-30℃. Fan speed setting range: auto, low speed, medium speed and high speed.

3) "＋" or "－"

- After each pressing of "＋" or "－" button, it can increase or decrease set temperature 1℃. Hold "＋" or "－" button, 2s later, set temperature on remote controller will change quickly. After reaching to your required time, loosen the button. Temperature indicator on indoor unit will also change accordingly. (Temperature can't be adjusted under auto mode)
- Under TIMER ON, TIMER OFF or Clock setting, you can press "＋" or "－" button to adjust time. (Refer to TIMER button for details)

4) FAN

Press this button, Auto, Low, Medium, High speed can be circularly selected.

Low speed Medium speed High speed

Note:

- Under AUTO Speed, indoor unit fan motor will adjust the fan speed (high, medium or low speed) according to ambient temperature.
- Fan speed under dry mode is low speed.

5) SWING UP and DOWN

Press this button to set up &down swing angle, which circularly changes as below:

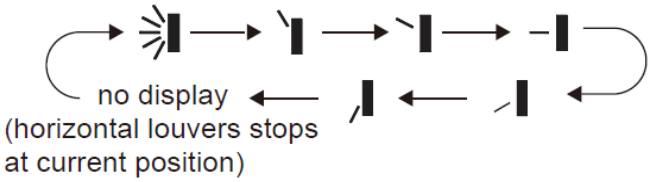

- When selecting "with remote controller, it's auto swing. Horizontal louver of air conditioner will swing up & down automatically at the maximum angle.
- When selecting "", ", ", ", "with remote controller, it's the fixed position swing. Horizontal louver of air conditioner will stop at that position as shown by the icon to swing.

6) SWING LEFT and RIGHT

Press this button to set left & right swing angle cycling as below:

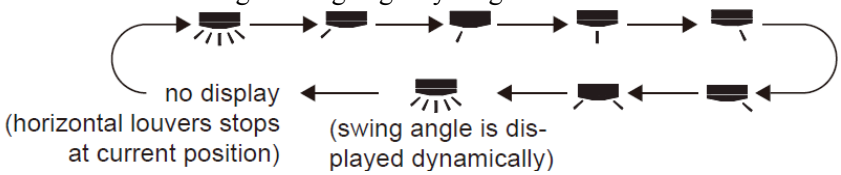

- When selecting " " with remote controller, it's auto swing. Horizontal louver of air conditioner will swing left&right automatically at the maximum angle.
- When selecting ""with remote controller, it's the fixed position swing. Horizontal louver of air conditioner will stop at that position as shown by the icon to swing.
- When selecting "(swing angle is displayed dynamically) ", it's the circulating swing. Horizontal louver of air conditioner will swing circularly according to the angle as shown by the icon.

7) HEALTH/SAVE

HEALTH function:

After pressing HEALTH button, remote controller will switch circularly as below:
"HEALTH"→"AIR"→"AIR HEALTH"→"no display"

- When selecting "HEALTH" by remote controller, HEALTH function will be started up.
- When selecting "AIR" by remote controller, AIR function will be started up.
- When selecting "AIT HEALTH", AIR and HEALTH function will be started up.
- When there's no display on remote controller, AIR and HEALTH function will be turned off.
- AIR function is applicable for some models.

SAVE function:

Under cool mode, press SAVE button and the unit will operate under SAVE mode. Dual-8nixie tube on remote controller displays "SE". Air conditioner will operate at auto speed. Set temperature can't be adjusted. Press SAVE button again to exit SAVE mode. Air conditioner turn back to original set speed and set temperature.

- This function is applicable to partial of models.

8) X-FAN:

After pressing this button under cooling or dry mode, remote controller displays the character of "X-FAN" and X-FAN function is started up. Press this button again to cancel X-FAN function. The character of "X-FAN" will disappear.

Note:

- After starting up X-FAN function, when turning off the unit, indoor fan will continue to operate for a while at low speed to dry the residual water inside the indoor unit.

- When the unit operates under X-FAN mode, press "X-FAN" button can turn off X-FAN function. Indoor fan stops operation immediately.

9) TEMP

Press this button can see indoor set temperature, indoor ambient temperature or outdoor ambient temperature on indoor unit's display. Temperature is set circularly by remote controller as below:

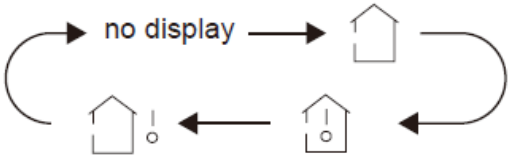

- When selecting "" by remote controller or no display, temperature indicator on indoor unit displays set temperature.
- When selecting "" by remote controller, temperature indicator on indoor unit displays indoor ambient temperature.
- When selecting "" by remote controller, temperature indicator on indoor unit displays outdoor ambient temperature.

Note:

- Outdoor ambient temperature display may can't be selected for some models. When indoor unit receives "" signal, it displays indoor set temperature.
- Only for the model whose indoor unit has dual-8 display.

10) TIMER

- At ON status, press this button once can set TIMER OFF. The character of HOUR and OFF will flash. Press "＋" or "－" button within 5s can adjust the time of TIMER ON. After each pressing of "＋" or "－" button, time will increase or decrease half an hour. When holding "＋" or "－" button, 2s later, the time will change quickly until to reach to your required time. After that, press "TIMER" button to confirm it. The character of HOUR and OFF won't flash again. Cancel TIMER OFF: Press "TIMER" button again under TIMER OFF status.
- At OFF status, press this button once can set TIMER ON. Please refer to TIMER off for detailed operation.
  Cancel TIMER ON: Press "TIMER" button again under TIMER ON status.

Note:

- Time setting range: 0.5-24 hours.
- Time interval between two operations can't exceed 5s. Otherwise, remote controller will exit the setting status automatically.

11) TURBO

When pressing this button under cooling or heating mode, air conditioner will enter into quick cooling or quick heating mode. The character of "TURBO" is displayed on remote controller. Press this button again to exit turbo function and the character of "TURBO" will be disappeared on remote controller.

12) SLEEP

Press this button under cooling, heating mode can start up sleep function. "" icon will be displayed on remote controller. Press this button again to cancel sleep function. ""icon on remote controller will be

displayed.

13) LIGHT

Press LIGHT button to turn on the display's light and press this button again to turn off the display's light. If the light is turned on, is displayed. If the light is turned off, disappears.

3.5.2 Introduction for special Operation

1) Child lock function

Press ＋ and － buttons simultaneously can turn on or turn off child lock function. When child lock function is started up, “ ”icon will be displayed on it. If operate remote controller, “ ” icon will flash three times, while remote controller won’t send signal.

2) Switchover function for temperature display

After turning off the unit by remote controller, press "-" button and "MODE" button simultaneously to switch between ℃ and °F .

3.5.3 Guide for General Operation

1) After putting through the power, press "ON/OFF " button on remote controller to turn on the air conditioner.
2) Press "MODE" button to select your required mode: AUTO, COOL, DRY, FAN, HEAT.
3) Press "+" or "-" button to set your required temperature. (Temperature can’t be adjusted under auto mode).
4) Press "FAN " button to set your required fan speed: auto, low, medium and high speed.
5) Press " " and " " button to select fan blowing angle.

4 Smart Zone Controller (CE50-24/E)

4.1 General Introduction

4.1.1 Function Introduction

This smart zone controller is a kind of regional controller, which is designed for free match units, capable of controlling up to 3 outdoor units and 16 indoor units.

Through this smart zone controller, it is available to view and control those running parameters of the indoor unit, including on/off, running mode, fan speed etc, and also perform the single control and centralized control, further, it also can set the weekly timer and long-distance shielding to realize convenient control to the air conditioning system.

a. Single control: it is intended to control the running parameters of a designated indoor unit individually.

b. Centralized control: it is intended to control the running parameters of all indoor units at the same time.

c. Shielding under single or centralized control: it is intended to shield the running parameter of the indoor unit.

d. Weekly timer under single or centralized control: it is intended to set when to start/stop the unit through long-distance control.

e. Clock: it is intended to set and display the weekday, hour and minute.

After the debugging to the controller is finished, it can check the on-line indoor units and display the parameter setting of the current running mode, set temperature, fan speed, weekly timer, shielding function etc. When some error occurs, the error symbol and the error code will be displayed to warn a quick maintenance.

This smart zone controller can be connected to the unit through the communication line without the need of the communication module, which can extremely ease and simplify the installation.

4.1.2 Scope of application

The smart zone controller cannot be adapted to all kinds of indoor units and the wired remote controller must be used in the indoor units. So the wall mounted and console types are beyond the scope of the smart zone controller.

4.2 Communication Network

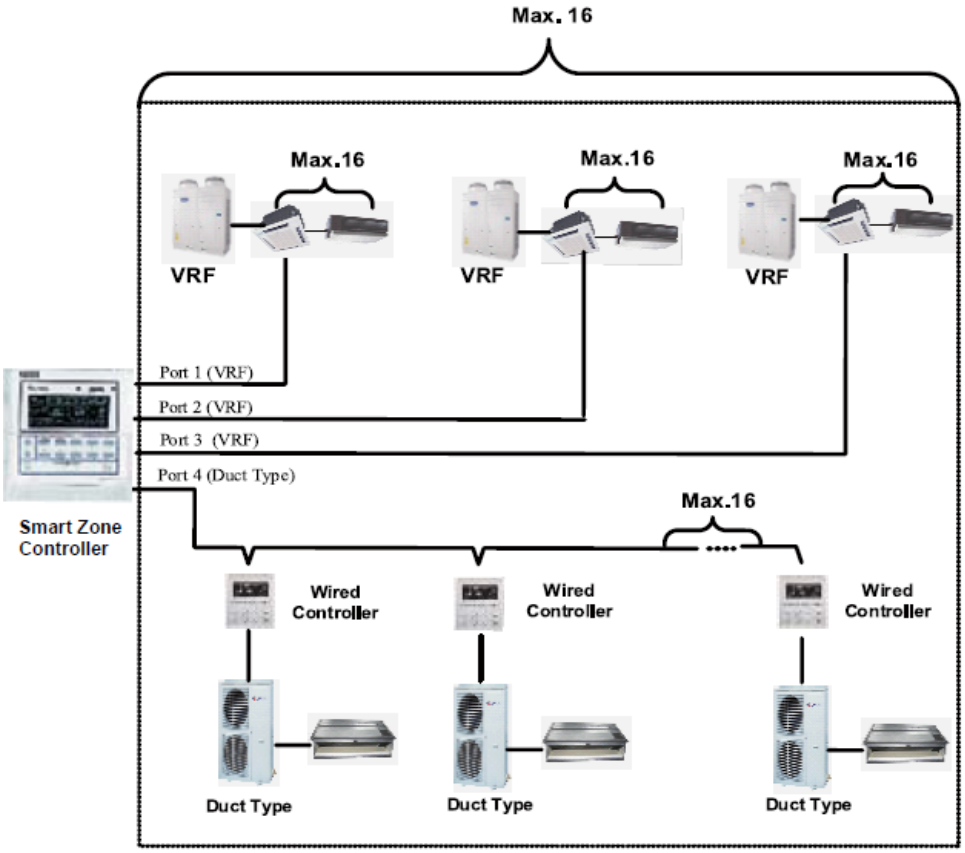

Note:

The smart zone controller can connect with maximum up to 3 outdoor units and 16 indoor units. However, the total of the indoor units of all four ports cannot exceed 16.

4.3 LCD

4.3.1 Outline of the LCD

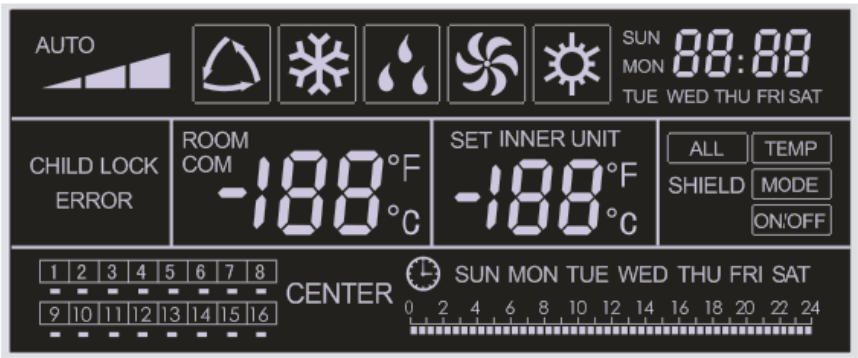

4.3.2 Introduction to Symbols on the LCD Straight Matter

No.	Name	Description
1	Fan speed	It displays the fan speed of the indoor unit, high, medium, low and auto.
2	Running mode	It displays the running mode of the indoor unit, auto, cool, dry, fan and heat.
3	System clock	It displays the current time (hour and minute) in 24-hour time system and also the week day.
4	Shield	It displays the shielded status, “ALL”, “TEMP”, “MODE” and “ON/OFF”.
5	Weekly timer	It displays the timing period (unit: 0.5 hour) which will circulate every week.
6	Set temperature/ Indoor unit code	It displays the set temperature, indoor unit code (01-16), and symbols of Celsius and Fahrenheit scale.
7	Control mode	It displays “CENTER” under the centralized control mode and no display under the single control mode.
8	Ambient temperature/ Serial port	It displays the ambient temperature, serial port as well as symbols of Celsius and Fahrenheit scale.
9	Indoor unit code/ on/ off status	Numbers indicate the indoor unit codes which will be displayed when the corresponding indoor unit is online; “□” indicates the on/off status of the indoor unit, that is, when it is bright, it means the unit is “On”; when it is gone out, it means the unit is “Off”.
10	Error , Child lock	It displays the error codes when some error(s) arises and also “CHILD LOCK” when this function is activated.

4.4 Buttons

4.4.1 Outline of Buttons

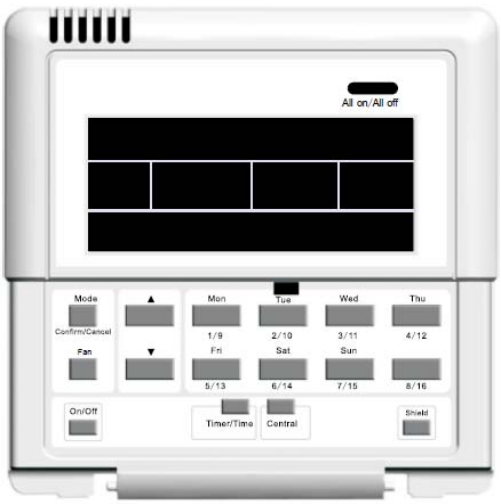

4.4.2 Introduction to the Function of Buttons

No.	Name	Function Description
1	Mode	It is used for the switchover among different modes.
2	Fan	It is used to set the fan speed, high, medium, low or auto.
3	On/Off	It is used to set the on/off status of the indoor unit.
4	▲	1. Under the single/centralized control status: It is used to set the running temperature of the indoor unit with max.30℃ and min.16℃ ; 2. Under the timing setting status: It is used to set the timing period with max.24 hours and min.0 hour; 3. Under the clock setting status: it is used to set the hour (max.:23, min.: 0) and minute (max.:59, min.: 0) of the clock.
5	▼	
6	Mon 1/9	It is used for the switchover between unit 1 and unit 9; Under the timing or clock setting status, it indicates Monday.
7	Tue 2/10	It is used for the switchover between unit 2 and unit 10; Under the timing or clock setting status, it indicates Tuesday.
8	Wed 3/11	It is used for the switchover between unit 3 and unit 11; Under the timing or clock setting status, it indicates Wednesday.
9	Thu 4/12	It is used for the switchover between unit 4 and unit 12; Under the timing or clock setting status, it indicates Thursday.
10	Fri 5/13	It is used for the switchover between unit 5 and unit 13; Under the timing or clock setting status, it indicates Friday.
11	Sat 6/14	It is used for the switchover between unit 6 and unit 14; Under the timing or clock setting status, it indicates Saturday.
12	Sun 7/15	It is used for the switchover between unit 7 and unit 15; Under the timing or clock setting status, it indicates Sunday.
13	8/16	It is used for the switchover between unit 8 and unit 16.
14	Timer/Time	It is used to set the timing or on/off time of the selected indoor unit as well as to set the clock of the system.
15	Central	It is used for the switchover between single and centralized control modes.
16	Shield	It is used to deactivate some or all functions of a single or a group the indoor unit(s).
17	All on/All off	It is used to start/stop all indoor units.

INSTALLATION

INSTALLATION

1 PRECAUTIONS FOR INSTALLATION

1.1 Precautions for Installation

Before installation, please ensure the installing site, power ratings, possible operating range (pipe distance, height difference between indoor and outdoor unit, power voltage) and installing space are correct and suitable.

- To ensure correct installation, please make sure to read the Safety Considerations thoroughly before starting the installation works.
- After completing the installation and test run and confirming that all are normal, please introduce to the client on how to use and repair the machine according to the Operating Instructions. Besides, please deliver the considerations herein to the clients together with the Operating Instructions, and ask them to keep properly.

Warning!: It indicates improper operation which will lead to human casualty or severe injury.

Caution!: It indicates improper operation which will lead to injury or property damage.

Warning !
The installation should be left to the appointed service center. Otherwise, it maybe cause water leakage, electric shocks or fire etc.
Please install the air conditioner according to the instructions given in the installation instructions. Improper installation may cause fall down, water leakage, electric shock or fire etc.
To install a large air-conditioning system in a small room, please make sure to take measures to prevent that the refrigerant will not exceed the limit concentration in case of leakage. For the measures to prevent the refrigerant from exceeding the limit concentration, please consult your dealer. If no proper measures, it might cause human suffocation in case of refrigerant leakage.
Please install the unit on a solid place where is strong enough to support the weight of the unit; Otherwise, the unit would fall down and cause injury or death.
Please keep the room well-ventilated and it could avoid oxygen deficit.
Electrical work should be carried out in accordance with the installation manual and the local laws and regulations. Insufficient capacity or incomplete electrical work may cause electrical shock or fire etc.
Please use suitable cables and connect them securely. Please fix the terminal joints securely. The terminal connection shall not be affected due to any external force applied onto the cable. Improper connection and fixing may cause heating and fire accidents.
The power supply must adopt the special circuit with air switch protection and assure it has enough capacity; The unit will be turned on or off according to your requirement automatically, please do not turn on or off the unit frequently. Otherwise, disadvantage effect may be caused to the unit.
Never cut off or damage power cables and control wires. If the power cable and signal control wire were damaged, change them by professional.
The electrical work should use a cable length enough to cover the entire distance with no connection. If it is unavoidable, please make sure the connection should be reliable and the external forces will not act on the wires. Otherwise it will cause electrical shock or fire etc.
When erecting or relocating the air conditioner, do not let any air enter into cooling circulation system except the specified refrigerant. If any air is mixed, abnormal high pressure will occur in the cooling circulation system, thus causing crack or human injury accidents.

Do not use or store flammable, explosive, poisonous or other dangerous substances beside the air conditioner.
When installing or relocating the unit. Please contact the appointed service center or the professional installation personnel for the repair or relocation of the unit.
The compressor will vibrate sharply if the voltage is too low and damage the refrigerating system. Electrical component are easy to damage if the voltage is too high. The voltage should be stable; there shouldn't be big fluctuation.
Please take notice of the installation foundation of the unit after long use, if it is damaged, it may lead to the fall of the unit and cause the injury.
The refrigerant pipes and accessories must be designed exclusively for R410A.

Caution!
Before installation, please check that whether the power supply corresponds with the requirement specified on the nameplate and also check its security.
Before using the unit, please check the piping and wiring, ensure they are correct to avoid water leakage, refrigerant leakage, electric shock, or fire etc.
Ground connection: connect to the ground reliably! The ground wire should be connected to the appropriative grounding device of the building. If the appropriative grounding device is not available, please ask a professional to install. Never connect the ground wire to gas pipe, water pipe, lightning rod, telephone line or other unreliable places considered by a professional.
It must install an earth leakage breaker. Otherwise, it maybe cause electric shocks or fire etc.
Install the air conditioner, the power wire and transmission line must be more than one meter away from televisions or radios which can emit electromagnetic waves to prevent image interference or noise. Otherwise, the unit maybe cannot work.
The drain pipe should be installed as instructed in the manual to guarantee the proper drainage; meanwhile it should be insulated to prevent condensing; otherwise the improper installation would cause water leakage and then wet the household wares in the room.
Be sure to shut off the power supply when you do not use the air conditioner for a long time. Otherwise, the dusts may accumulate in it, which may cause overheating or fire hazards.
Never standing on the outdoor unit or place objects on it. Person or objects falling from the unit may cause injury.
The air conditioner is not support to install in the circumstances as the following that where there is full of mist of oil, corrosive gas, flammable gases, the acidic or alkaline vapor and the ocean.
Once started, the air conditioner shall not be stopped at least after 5 minutes or longer; otherwise its service life the unit will be shortened.
Do not let the children operate the air conditioner.
Never operate the unit with wet hands. Otherwise, it may cause electric shock.
Before cleaning and repairing, it is necessary to stop working and turn off the power supply. Otherwise, it may cause electric shock or damage.
It is suggested to have a power-on test annually.

1.2 Key Points of Installation

Installation Procedures			Description and Acceptance Criteria
Material Selection and Equipment Inspection			◆ The materials specified on the engineering drawing shall be purchased as specified (e.g. copper tube, thermal insulation tube, PVC pipe, power cables, air switch, etc). ◆ The materials not specified on the engineering drawing shall be purchased according to the actual quantity of works (e.g. hanger frame, cable duct, etc). ◆ Check if the outdoor unit, indoor unit, BU modules, communication wires and accessories are complete.
Installation of indoor unit	Communication wire	Connection	◆ The power cables shall be separated from communication wires at a least distance of 2cm. ◆ To avoid breaking the communication wires, please do not use strong force. ◆ For multiple units, please mark them properly. ◆ Switch on the unit, and ensure there is no display of "Communication Wire Error E6".
		Address dial code	◆ Each BU module and indoor unit under the same system has a unique address dial code. ◆ The wired controller and its corresponding indoor unit have the same address dial code.
	Remote Control		◆ Select the remote control mode. ◆ The centralized controller and communication module shall be installed free from the source of interference.
	Power cord		◆ The power cable must meet the specifications.
	Drainage Pipe	Installation	◆ The PVC pipes must meet the specifications. ◆ A specific gradient must be provided along the water flow direction. ◆ Carry out water detection after installation. ◆ Carry out thermal insulation to the drainage pipe only after the water detection is accepted.
		Thermal insulation	◆ The thermal insulation tube must meet the specifications. ◆ Seal between the thermal insulation pipes to avoid air entry.
Installation of connection pipes	Welding		◆ The copper tube must meet the specifications. ◆ Ensure it is dry and clean inside the tube. ◆ Make sure to charge nitrogen as required for protection when welding the tubes. ◆ Please keep to the welding process and ensure the system free of leakage. ◆ Add a dual-way filter on liquid pipe side ◆ For multiple systems, please mark them properly. ◆ Carry out leakage detection under pressure after welding.

	Purge and make leakage detection under pressure	◆ Purge the system clean. ◆ Keep the pressure for 24 hours ◆ Except for the influence by temperature, it is deemed acceptable if pressure drop is within 0.02MPa. (With the temperature change by 1℃, the pressure will change by approx. 0.01MPa)
	Thermal insulation	◆ The thermal insulation tube must meet the specifications. ◆ Seal between the thermal insulation pipes to avoid air entry.
Installation of outdoor unit		◆ Select the installing position correctly. ◆ Build the foundation according to the anchor bolt position and the dimension of outdoor unit ◆ Build the damping device properly. ◆ Avoid sharp knock when handling the outdoor unit. The inclination angle shall not be higher than 15°.
Connection of indoor unit and outdoor unit		◆ Tighten the nuts. ◆ Provide proper protection to the outdoor connection pipe, communication wires and power supply.
Leakage detection under pressure		◆ Keep the pressure for 24 hours. Except for the influence by temperature, it is deemed acceptable if pressure drop is within 0.02MPa. (With the temperature change by 1℃, the pressure will change by approx. 0.01MPa).
Vacuuming		◆ Establish vacuum simultaneously in the gas pipe and liquid pipe; ◆ The vacuuming time shall be long enough. ◆ Put still for 1 hour after vacuuming. It is deemed acceptable if the pressure will not rise.
Add refrigerant		◆ Add refrigerant according to the volume as specified on the engineering drawing.
Open the valve of outdoor unit		
Commissioning of complete unit		

Remarks:

a. Described above are general working procedures. The procedures might vary with the site conditions.

b. For detailed installation rules, please see the description in each chapter

2 FLOW CHART OF INSTALLATION

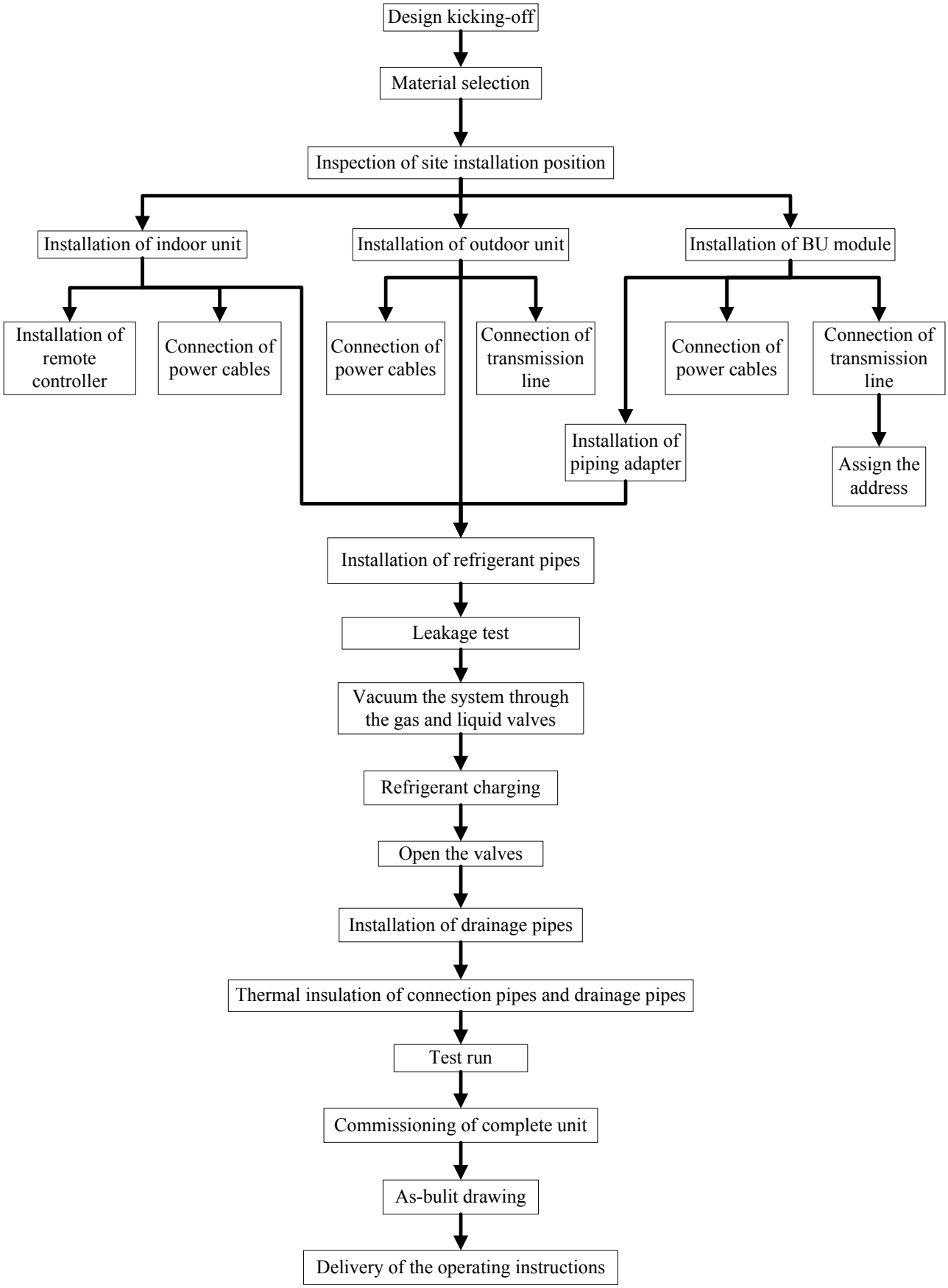

3 OUTDOOR UNIT INSTALLATION

3.1 Precautions for R410A

- It is very strict that the refrigerant pipes should be clean and dry.
- The R410A is a mixed refrigerant, when add the refrigerant to the unit, it must keep the refrigerant in its liquid state. If the refrigerant is in gas state, the composition has been changed and the capability of the unit will decrease.
- When the refrigerant is leak out, please do not touch the leakage. Otherwise, it will result in frostbite.
- It does not support to let a lot of refrigerant go into the ambient atmosphere, because it will strengthen the green house effect. Otherwise, it will produce toxic gas when the refrigerant contacts with the fire.

3.2 Precaution for Installation

- The unit is so heavy that it is more than 110kg, so more than two persons will be needed to remove the unit. The package cannot bear it, so do not grasping it.
- When remove the units, please place the hands on the corner and take care not to hurt the hands by the fins.
- It is very likely to dispose the waste to the garbage bin after the installation.

3.3 Names of Main Parts

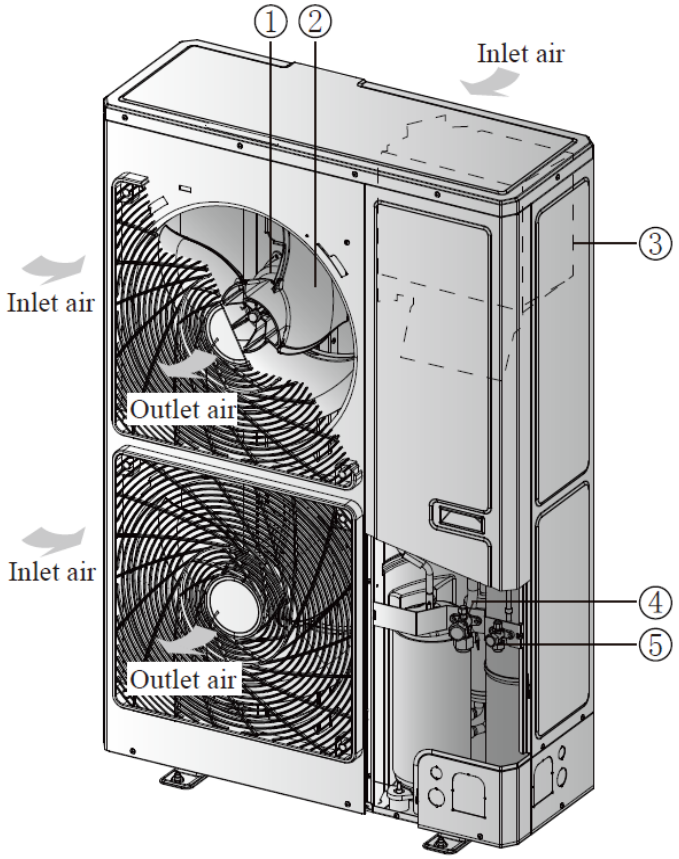

NO.	①	②	③	④	⑤
Name	Fan motor	Axial flow fan blade	Electrical box	Gas side stop valve	Liquid side stop valve

3.4 Parts and Components of Unit

For the super free match series system, one outdoor unit is able to drive up to three BU modules and nine indoor units which include cassette type, duct type, wall mounted type, floor ceiling type and console type. The outdoor unit will run as long as any one indoor unit receives the running command, and all indoor units stop once the outdoor unit is turned off.

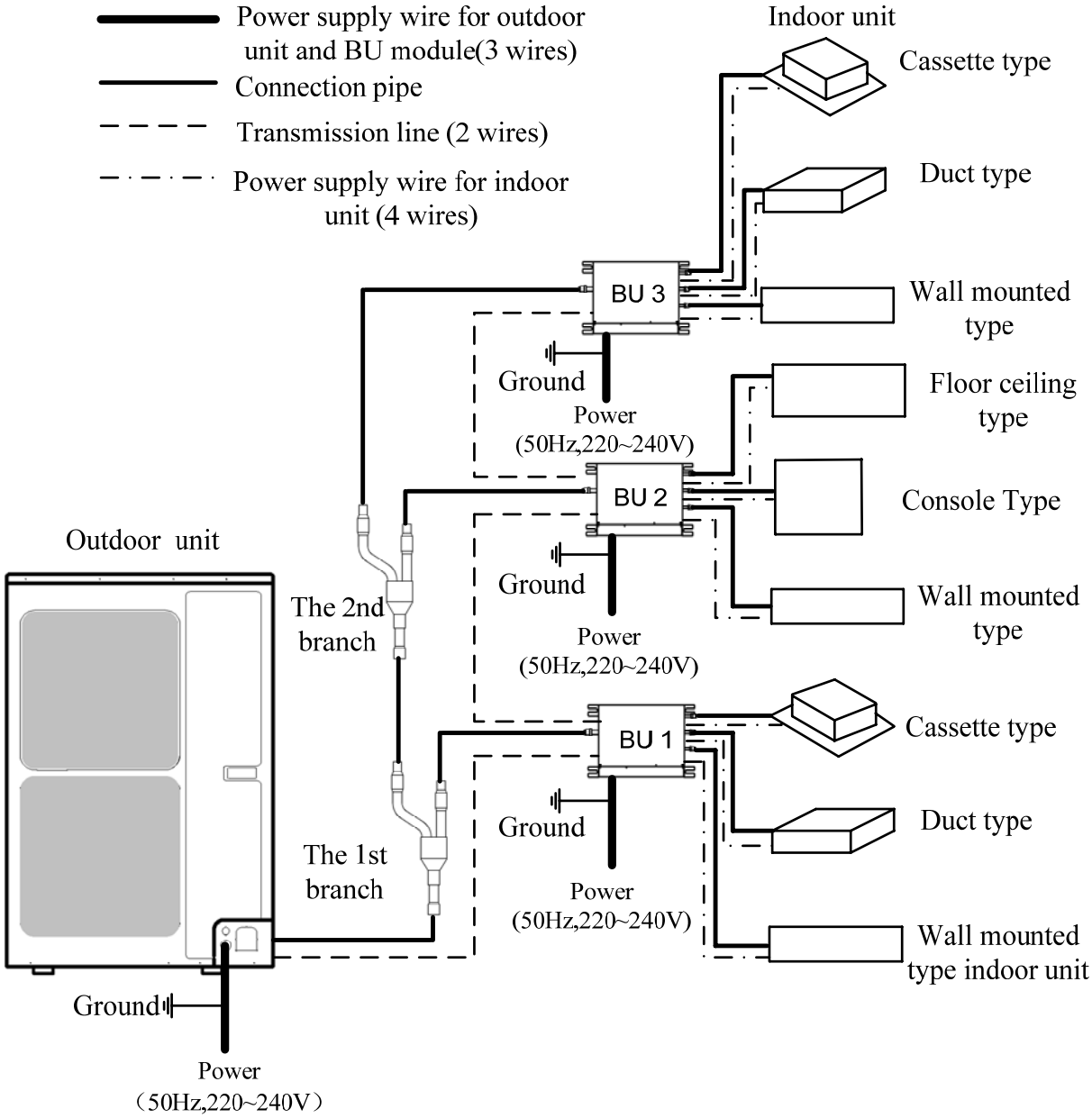

3.5 Selection of Installation Location

- The installation of the air conditioner must be in accordance with the national and local laws and regulations.
- The quality of the installation will affect the capability of air conditioner directly. The installation should be left to the appointed service center. Please contact your dealer after purchasing this machine. Professional installation workers will provide installation and test services according to the installation manual.
- The air conditioner should not install in this place where the small animals exist, because they may cause malfunctions, smoke or fire. Please keep the area around the unit clean.
- The outdoor unit must be installed on a firm and solid support which can withstand the weight and the

mounting surface must be horizontal plane.

- There is enough space for the installation and maintenance.
- The place should be well-ventilated, so the machine can absorb and discharge sufficient air.
- Outdoor unit shall be installed close to the indoor unit, hence to minimize the length and bends of cooling pipe.
- Avoid place the outdoor unit under the windows or between the constructions, hence to prevent normal operating noise from entering the room.
- Do not install in the place where there is flammable or explosive gas exist or a place subject to severe dust, salty fog and polluted air.

Installation at the following places might lead to the air conditioner malfunction. If it is unavoidable, please contact the appointed service center.

- A place which is full of machine oil;
- A region with saline-sodic soil near the sea;
- A place where the sulphide fog exists, such as the sulphur spring;
- A place where the high frequency facilities exist, such as radio equipment, electric welder and medical equipment;
- An environment with special conditions.

3.6 Outline Dimension of the Outdoor Unit

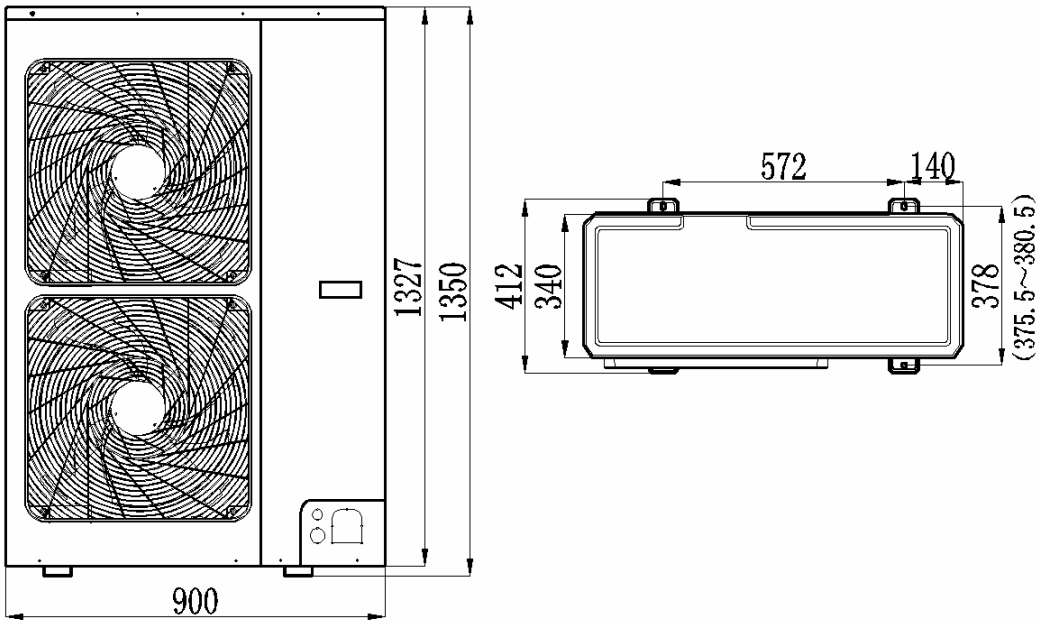

3.7 Installation and Servicing Space

1) When the place of the installation is exposed to strong wind

When strong winds of 5 m/sec or more exist in the place of the installation, the outlet of the unit cannot face the wind. If the wind blows against the outdoor unit's air outlet, it will cause deterioration of the operational capacity and maybe break the fan.

2) In case of installing only one unit

In case obstacles exist around the unit, the required installation space is in the following figure. The unit of the values is mm.

3) In case of installing multiple units(2 units or more)

In case multiple rows of series installation, the required installation space is in the following figure. The unit of the values is mm.

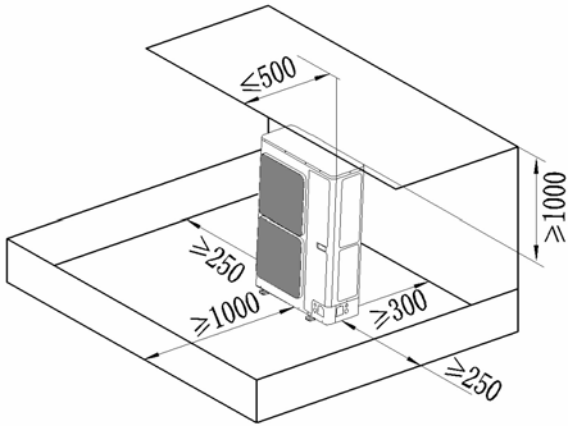

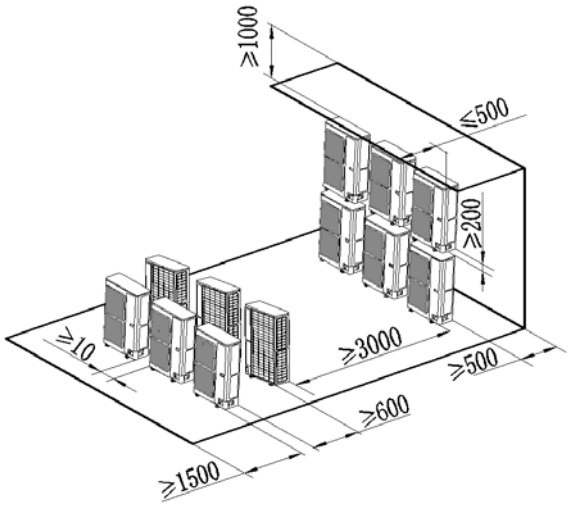

3.8 Installation of the Outdoor Unit

1) Check the installation location and ensure it is strength and level, so that the unit will not cause any operating vibration or noise after installation.
2) In accordance with the foundation drawing in the following figure, please drill 4 holes in the installation location.

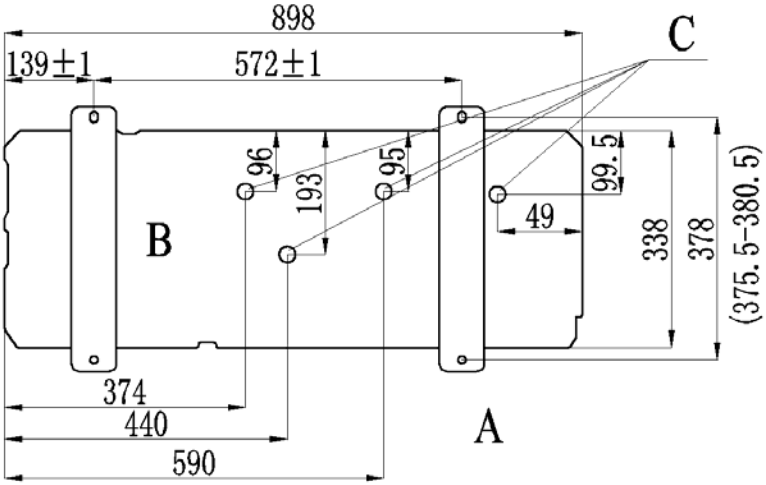

A: The outlet side B: Bottom view (mm) C: Drain hole

3) Fix the unit securely with the foundation bolts. You can get the M10 or M8 foundation bolts, nuts and washers from the market.

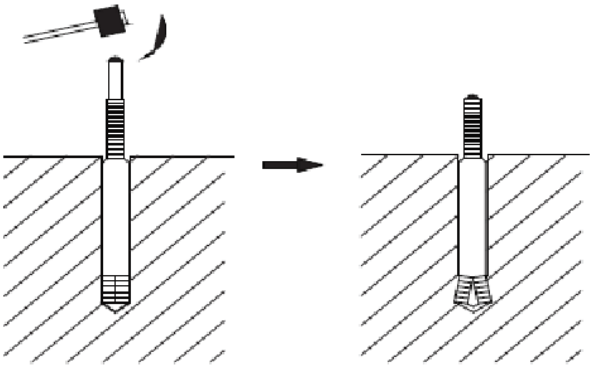

4) Rubber or spring shock absorbers should be used during the installation of the outdoor unit to meet the noise and vibration requirements.
5) Screw the foundation bolts into the ground and it is better that their length is less than 20mm from the foundation face.

4 INDOOR UNIT INSTALLATION

4.1 Installation of Wall Mounted Type

4.1.1 Important Notices

- The installation of air conditioner unit must be in accordance with national and local safety codes.
- Installation quality will directly affect the normal use of air conditioner unit. The user is prohibited from installation by himself. Please contact the dealer after buying this machine. Professional installation workers will provide installation and test services according to installation manual.
- Do not connect to power until all installation work is completed.

4.1.2 Basic Requirements for Installation Position

Installing the unit in the following places may cause malfunction. If it is unavoidable, please consult the dealer:

- The place with strong heat sources, vapors, flammable or explosive gas, or volatile objects spread in the air.
- The place with high-frequency devices (such as welding machine, medical equipment).
- Place where a lot of salinities such as coast exists.
- Place where the oil (machine oil) or fumes is contained in the air.
- Place where a sulfured gas such as the hot spring zones is generated.
- The appliance shall not be installed in the laundry.
- Other place with special circumstance.

4.1.3 Indoor Unit Installation Position Selection

- There should be no obstruction near air inlet and air outlet.
- Select a position where the condensing water can be dispersed easily and won't affect other people, otherwise the place is easily connected for outdoor unit.
- Select a location where the children cannot reach.
- Can select the place where is strong enough to withstand the full weight and vibration of the unit. And will not increase the noise.
- Be sure to leave enough space to allow access for routine maintenance. The height of the installed location should be 250 cm or more from the floor.
- Select a place about 1m or more away from TV set or any other electric appliances.
- Select a place where the filter can be easily taken out.
- Make sure that the indoor unit installation should accord with installation dimension diagram requirements.

4.1.4 Installation and Servicing Space

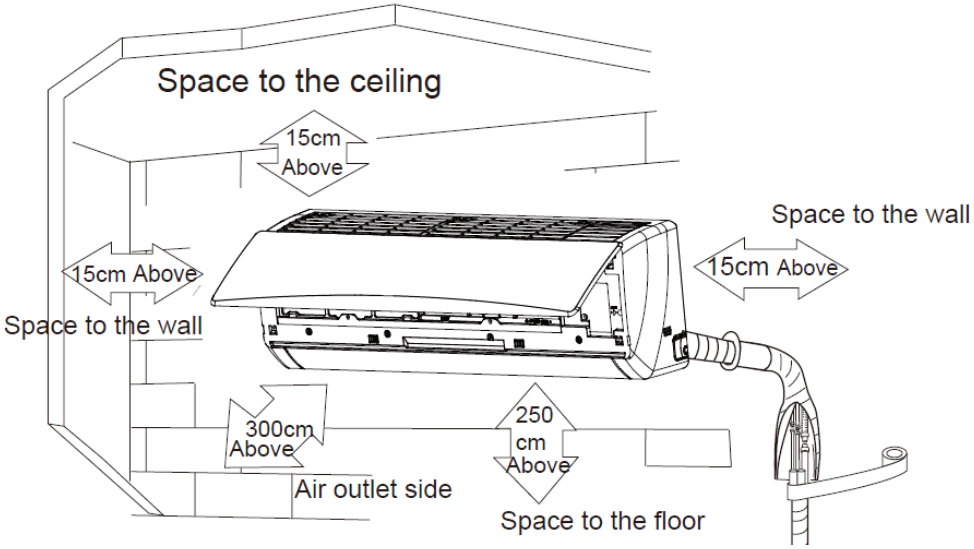

4.1.5 Installation of Mounting Plate

1) Mounting plate should be installed horizontally. As the water drainage pipe for the indoor unit is two-way type, during installation, the indoor unit should slightly slant to water tray's outlet for smooth drainage of condenser water.
2) Fix the mounting plate on the selected location with screws.
3) Be sure that the mounting plate has been fixed firmly enough to withstand the weight of an adult of 60kg, furthermore, the weight should be evenly shared by each screw.

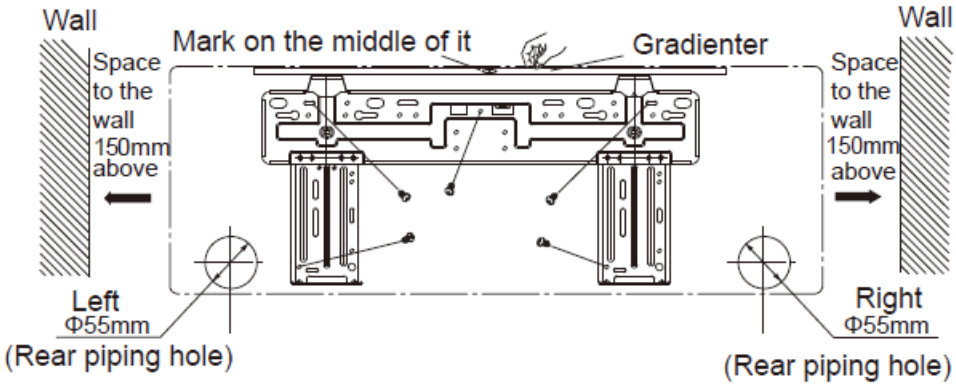

4.1.6 Drill piping hole

1) Slant the piping hole (Φ55/Φ70) on the wall slightly downward to the outdoor side.
2) Insert the piping-hole sleeve into the hole to prevent the connection piping and wiring from being damaged when passing through the hole.

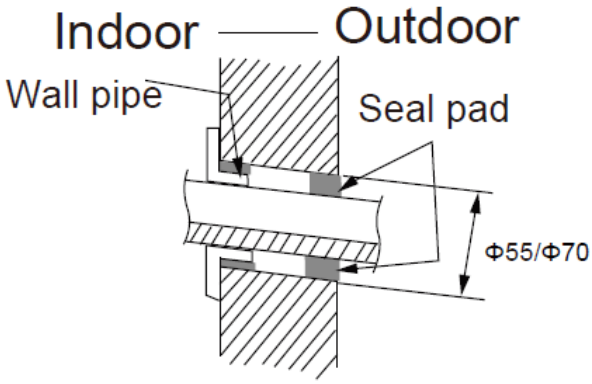

4.1.7 Installation of drain hose

1) Connect the drain hose to the outlet pipe of the indoor unit. Bind the joint with rubber belt.

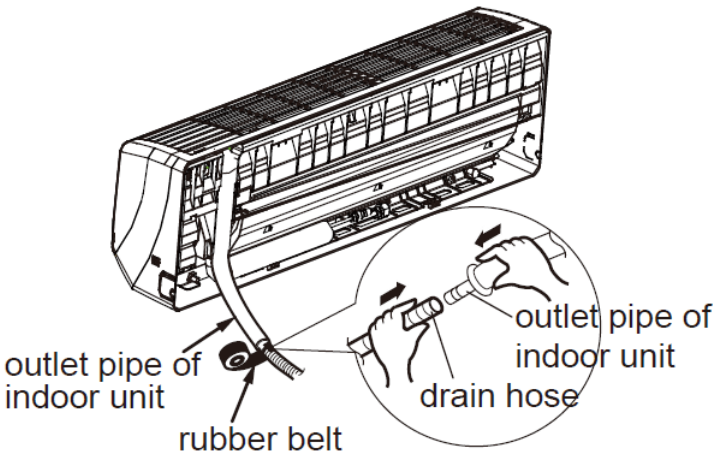

2) Put the drain hose into insulating tube.

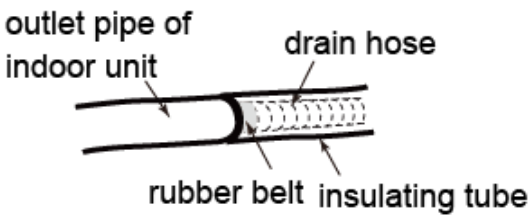

3) Wrap the insulating tube with wide rubber belt to prevent the shift of insulating tube. Slant the drain hose downward slightly for smooth drainage of condensate.

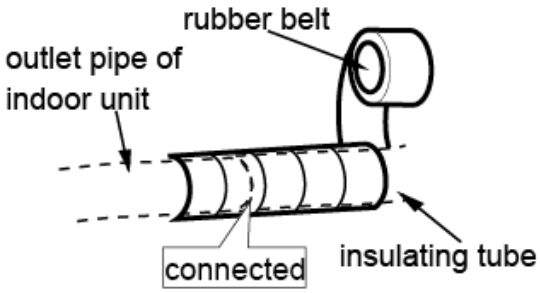

Note:

The insulating tube should be connected reliably with the sleeve outside the outlet pipe. The drain hose should be slanted downward slightly, without distortion, bulge or fluctuation. Do not put the outlet in the water.

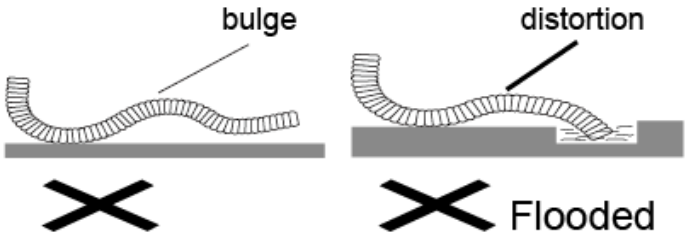

4.2 Installation of Duct Type

4.2.1 Installation Location and Matters Needing Attention

- The installation of air conditioner unit must be in accordance with national and local safety codes.
- Installation quality will directly affect the normal use of air conditioner unit. The user is prohibited from installation by himself. Please contact your dealer after buying this machine. Professional installation workers will provide installation and test services according to installation manual.
- Do not connect to power until all installation work is completed.

4.2.2 How to select the installation location for the indoor unit

- Where there is no direct sunlight.
- Where the top hanger, ceiling and the building structure are strong enough to withstand the weight of the unit.
- Where the drain pipe can be easily connected to outside.
- Where the flow of the air inlet and outlet are not blocked.
- Where the refrigerant pipe of the indoor unit can be easily led to outside.
- Where there is no inflammable, explosive substance or their leakage.
- Where there is no corrosive gas, heavy dust, salt mist, smog or moisture.

The unit which is installed in the following places is likely to run abnormally. If unavoidable, please contact the professional personnel at the GREE appointed service center：

① Where is full of oil;

② Alkaline soil off the sea;

③ Where there is sulfur gas(like sulfur hot spring);

④Where there are devices with high frequency (like wireless devices, electric welding devices, or medical equipments);

⑤ Special circumstances.

4.2.3 Caution for Installation

- Ensure the hanger is strong enough to withstand the weight of the unit.
- The drainage of the drain pipe is easy.
- No obstacle is in the inlet/outlet and the air circulation is in good condition.
- Ensure the installation space is left for the access to maintenance.
- It should be far away from where there is heat source, leakage of inflammable, explosive substances, or smog.
- It is the ceiling type unit (concealed in the ceiling).
- The power cords and connection lines of the indoor and outdoor units must be at least 1m away from the TV set or radio to avoid the image interference and noise (even if 1m is kept, the noise may be produced due to the strong electric wave).

4.2.4 Outline Dimension Drawings of the Indoor Unit

Note: the unit in the followings figures is mm, unless otherwise specified.

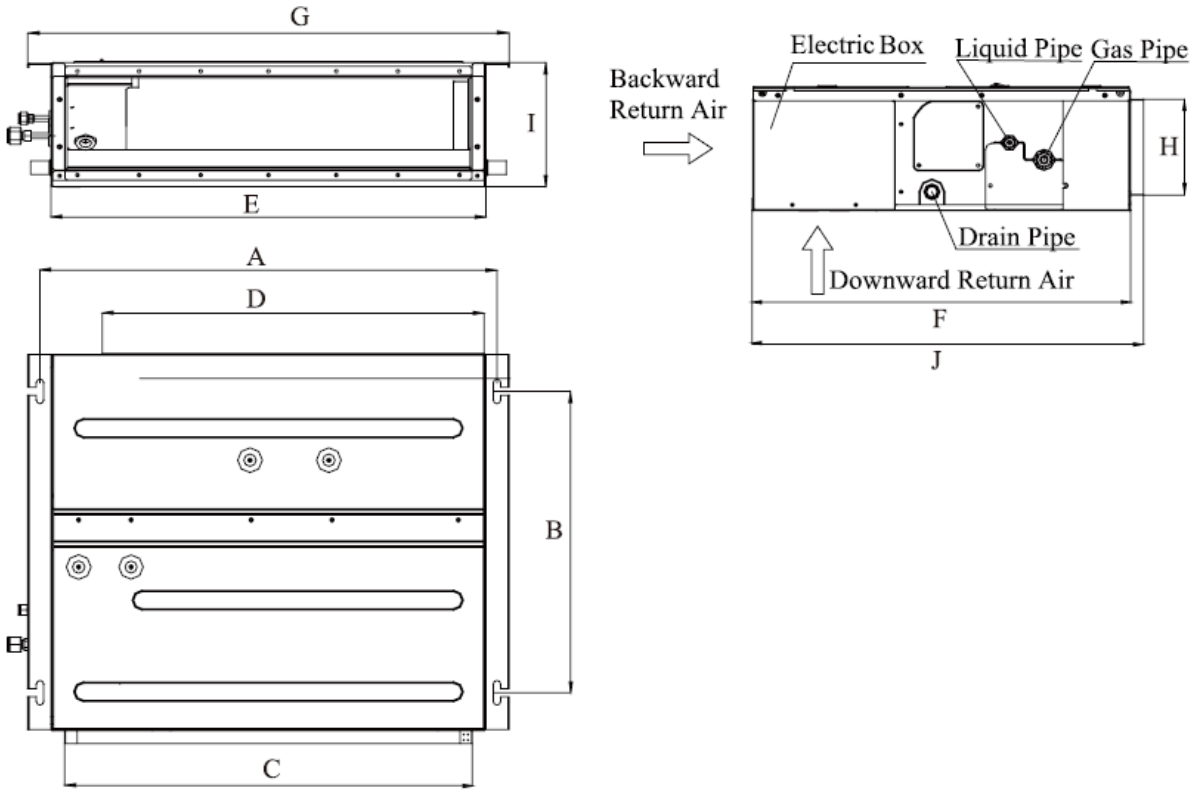

Model	A	B	C	D	E	F	G	H	I	J
GFH(09)EA-K3DNA1A/I	742	491	528	620	700	615	782	121	200	635
GFH(12)EA-K3DNA1A/I										
GFH(18)EA-K3DNA1A/I	942	491	728	820	900	615	982	121	200	635
GFH(21)EA-K3DNA1A/I	1142	491	928	1020	1100	615	1182	121	200	635
GFH(24)EA-K3DNA1A/I										

4.2.5 Dimension Requirements on the Installation Space of the Indoor Unit

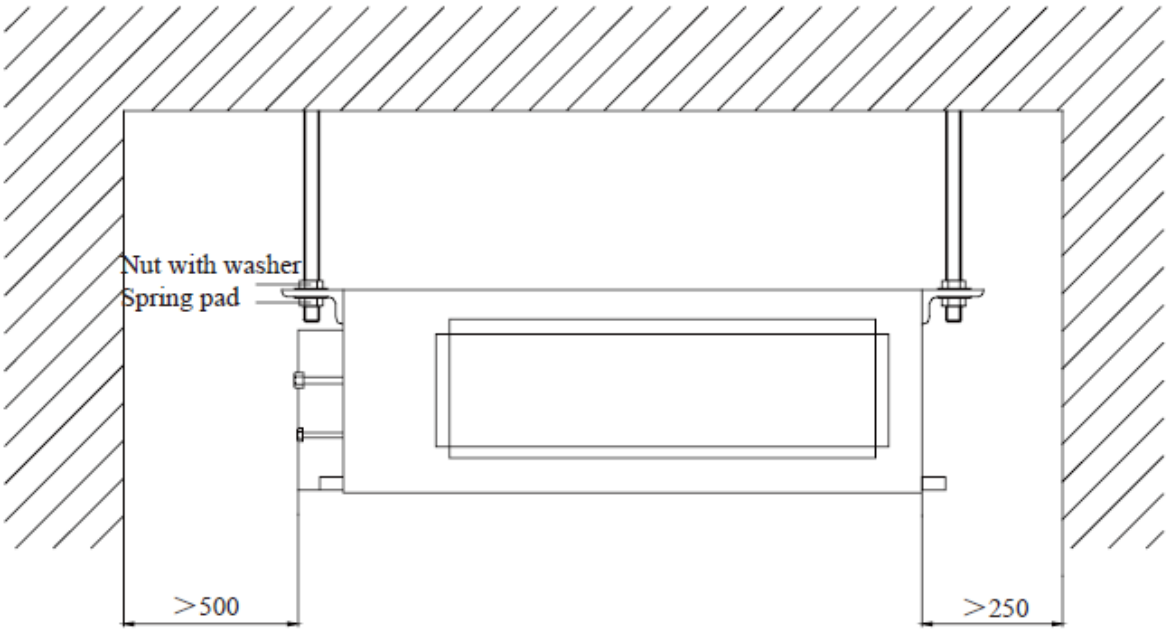

4.2.6 Installation of the Indoor Unit

1) Requirements on the Installation Location

- Ensure the hanger is strong enough to withstand the weight of the unit.
- The drainage of the drain pipe is easy.
- No obstacle is in the inlet/outlet and the air circulation is in good condition.
- Ensure the installation space shown in the following figures is left for the access to maintenance.
- It should be far away from where there is heat source, leakage of inflammable, explosive substances, or smog.
- It is the ceiling type unit (concealed in the ceiling).
- The power cords and connection lines of the indoor and outdoor units must be at least 1m away from the TV set or radio to avoid the image interference and noise (even if 1m is kept, the noise may be produced due to the strong electric wave).

2) Installation of the Indoor Unit

Insert the M10 expansion bolt into the hole, and then knock the nail into the bolt. Refer to the Outline Dimension Drawings of the Indoor Unit for the distance between holes and see the following figures for the installation of the expansion bolt.

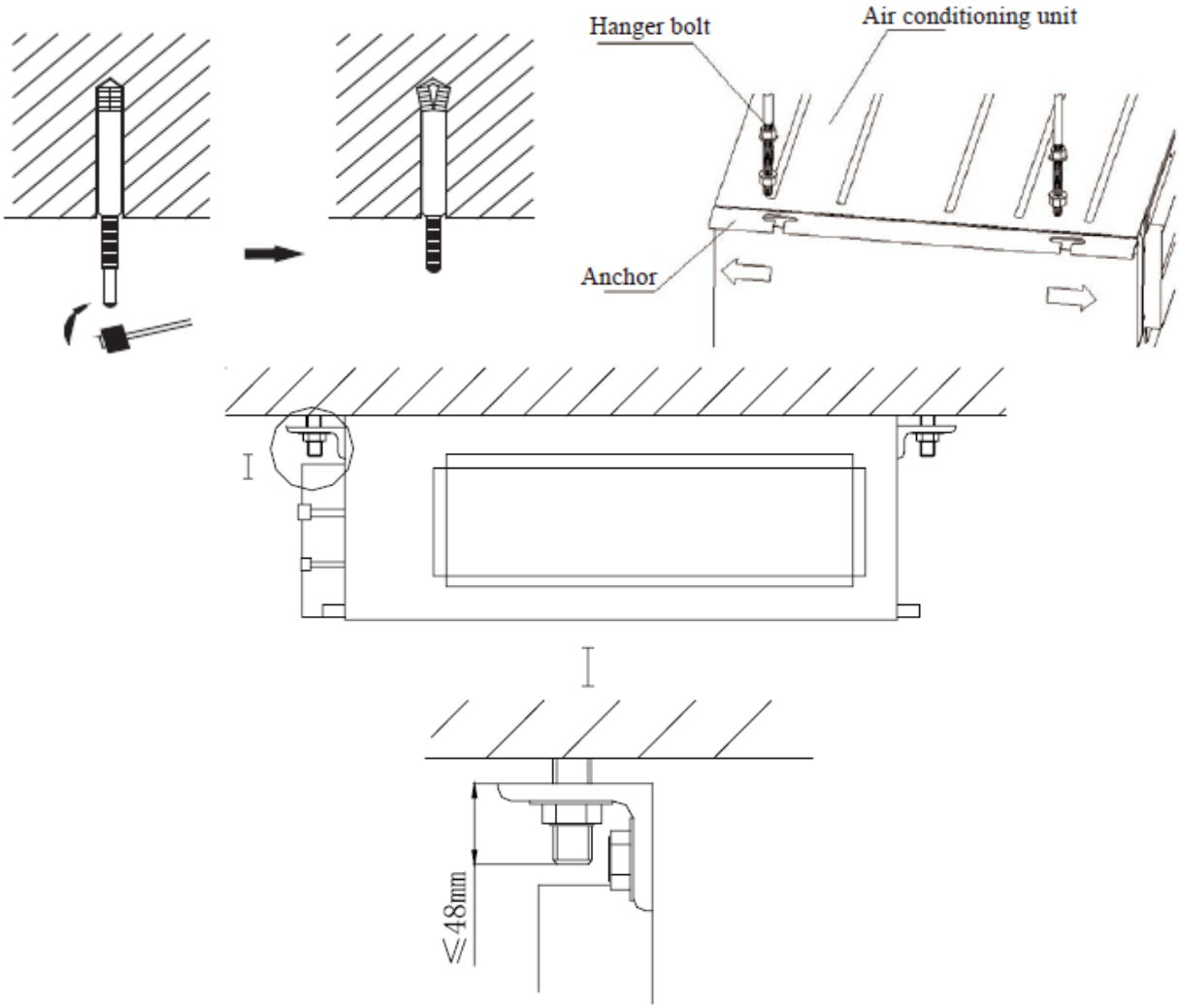

CAUTION!

- Prior to the installation, please make a good preparation for all piping (refrigerant pipe, drain pipe) and wiring (wires of the wired controller, wires between the indoor and outdoor unit) of the indoor unit to make the further installation much easier.
- If there is an opening in the ceiling, it is better to reinforce it to keep it flat and prevent it vibrating.

Consult the user and builder for more details.

- If the strength of the ceiling is not strong enough, a beam made of angle iron can be used and then fix the unit on it.
- If the indoor unit is not installed in the air conditioning area, please use sponge around the unit to prevent condensing. The thickness of the sponge depends on the actual installation environment.

4.2.7 Horizontality Check of the Indoor Unit

After the installation of the indoor unit, its horizontality must be checked to make sure the unit keep horizontal fore and aft and keep an inclination of 5° toward the drain pipe right and left.

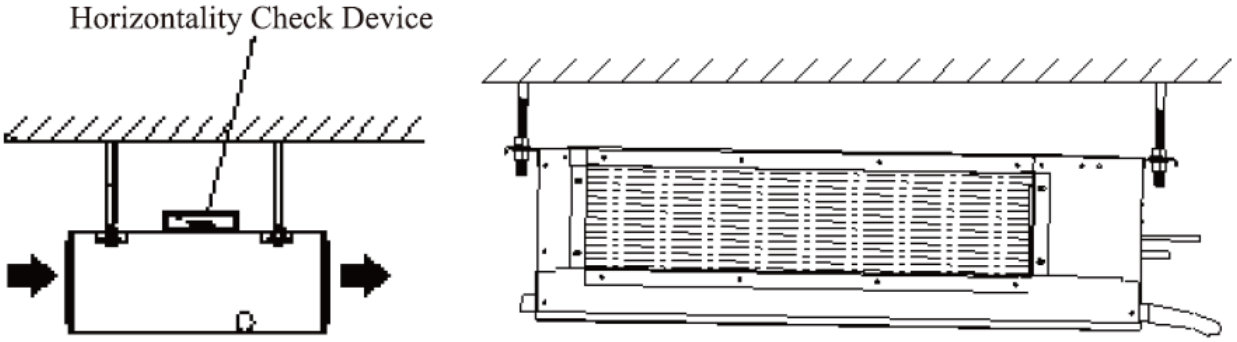

4.2.8 Installation of the Air Supply Duct

1) Installation of the Rectangular Air Supply Duct

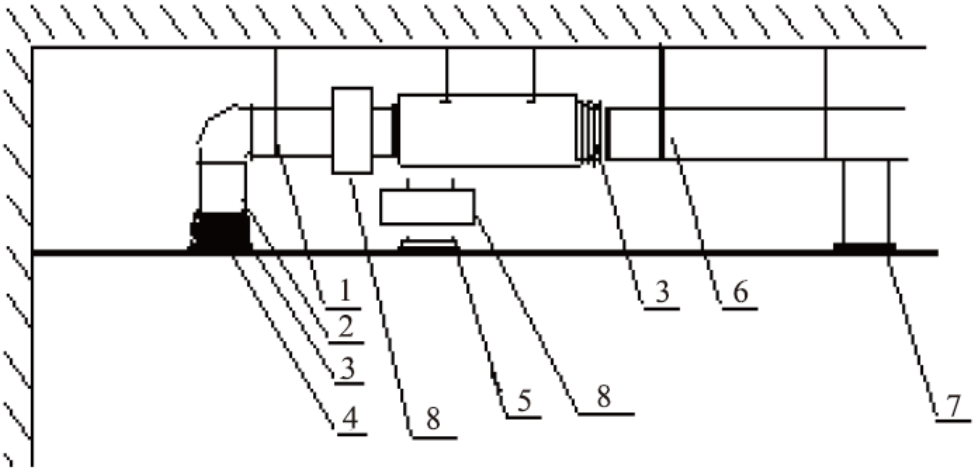

No.	Name	No.	Name
1	Hanger	5	Filter Screen
2	Return Air Duct	6	Main Air Supply Duct
3	Canvas Duct	7	Air Supply Outlet
4	Return Air Inlet	8	Plenum Box

2) Installation of the Round Air Supply Duct

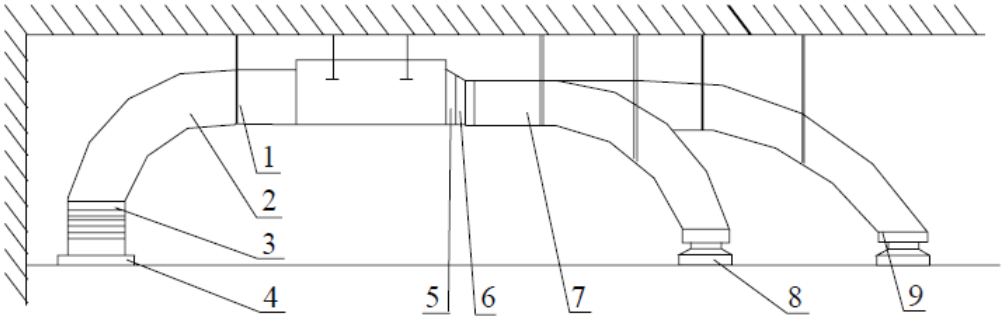

No.	Name	No.	Name
1	Hanger	6	Transition Duct
2	Return Air Duct	7	Air Supply Duct
3	Canvas Duct	8	Diffuser
4	Return Air Louver	9	Diffuser Joint
5	Air Supply Outlet		

3) Installation Steps of the Round Air Supply Duct

- Preinstall the outlet of the round duct on the transition duct and then fix it by the self-tapping screw.
- Place the transition duct to the air outlet of the unit and fix it with rivet.
- Connect the outlet to the duct and then tighten them with tape. Other installation details are not covered herein.

CAUTION!

- The maximum length of the duct means the maximum length of the air supply duct plus the maximum length of the return air duct.
- For the unit with the auxiliary electric heating function, if the round duct is to be adopted, then the straight length of the transition duct cannot be less than 200mm.
- The duct is either rectangular or round and connected with the air inlet/outlet of the indoor unit. Among all air supply outlets, at least one should be kept open. As for the round duct, it needs a transition duct of which the size should match with the air supply outlet of the unit. After the fitting of the transition duct, it is the turn of the round duct, which is better to be kept 10 meters far away from the corresponding diffuser. The standard accessories supplied by GREE is the transition duct 200mm long and round air outlet φ200, however, those of other specifications can be purchased.

4.2.9 Installation of the Return Air Duct

1) The default installation location of the rectangular flange is in the back and the return air cover plate is in the bottom.

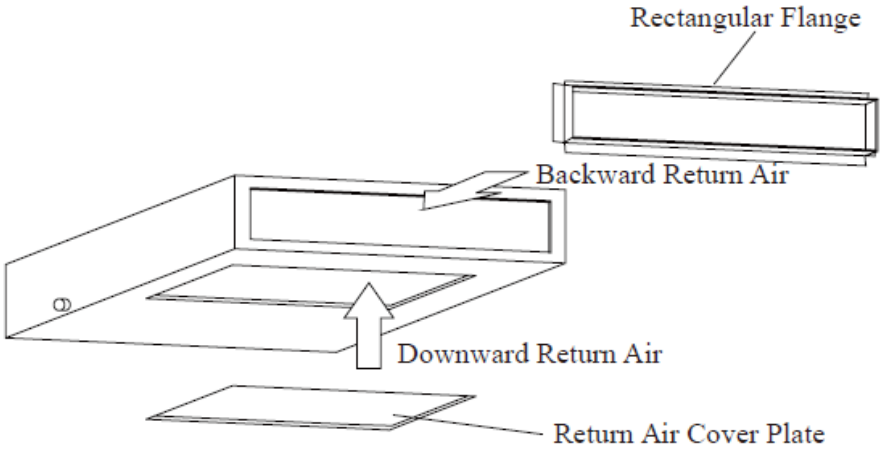

2) If the downward return air is desired, just change the place of the rectangular flange and the return air cover plate.
3) Connect one end of the return air duct to the return air outlet of the unit by rivets and the other to the return air louver. For the sake of the convenience to freely adjust the height, a cutting of canvas duct will be helpful, which can be reinforce and folded by 8# iron wire.
4) More noise is likely to be produced in the downward return air mode than the backward return air mode, so it is suggestive to install a silencer and a plenum box to minimize the noise.
5) The installation method can be chose with considering the conditions of the building and maintenance etc.

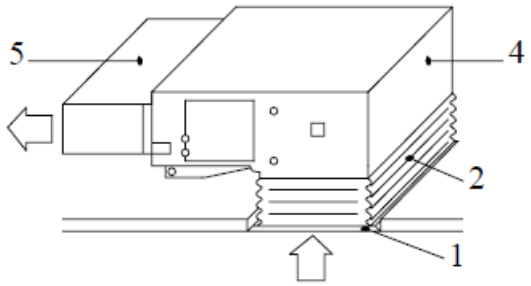

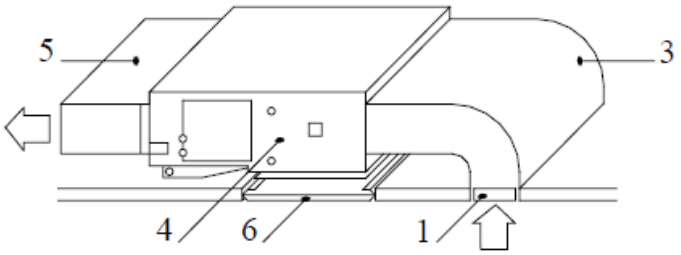

No.	Name	No.	Name
1	Return Air Louver(with the filter screen)	4	Indoor Unit
2	Canvas Duct	5	Air Supply Duct
3	Return Air Duct	6	Access Grille

4.2.10 Installation of the Condensate Pipe

1) The condensate pipe should keep a inclination angle of 5～10°, which can facilitate the drainage of the condensate water. And the joints of the condensate pipe should be insulated by the insulation material to prevent condensing.

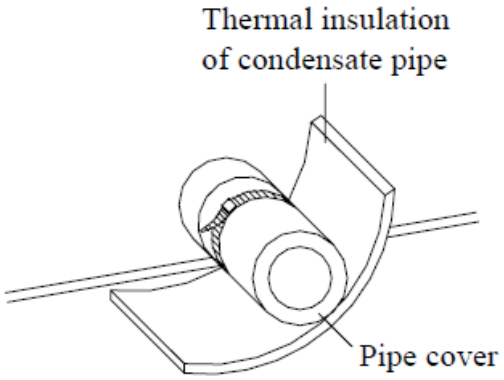

2) There is a condensate outlet on both left and right sides of the unit. Once one is confirmed to be used, the other should be clogged by a rubber plug, bundled by the binding wire and insulated by the insulation material to avoid water leakage.
3) The right outlet is defaulted to be clogged with a plug.

CUATION!

No water leakage is allowed on the joint of the condensate pipe.

4.2.11 Design of the Drain Pipe

1) The drain pipe should always keep an inclination angle(1/50～1/100) to avoid the water gathering in some certain place.
2) During the connection of the drain pipe and device, do not impose too much force on the pipe on one side of the device and the pipe should be fixed as close as to the device.
3) The drain pipe can be the ordinary hard PVC pipe which can be purchased locally. During the connection, inset the end of the PVC pipe to the drain outlet, then tighten it with the drain hose and binding wire but never connect the drain outlet and the drain hose by adhesive.
4) When the drain pipe is used for multiple devices, the public section of the pipe should be 100mm lower than the drain hole of each device and it is better to use the much thicker pipe for such a purpose.

4.2.12 Installation of the Drain Pipe

1) The diameter of the drain pipe should be larger or equal to that of the refrigerant pipe (PVC pipe, outer dimater:25mm, wall thickness≥1.5mm.
2) The drain pipe should be as short as possible and with at least a 1/100 degree of slope to avoid forming air pockets.
3) If the proper degree of slope of the drain pipe is not allowed, a lift pipe should be installed.
4) A distance 1-1.5m should be kept between the hangers to avoid the drain hose making a turn.

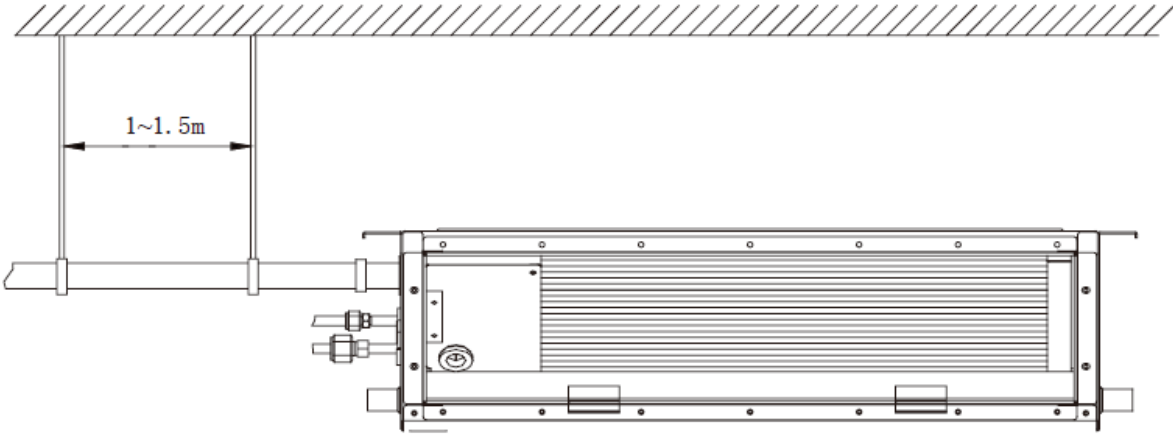

Right

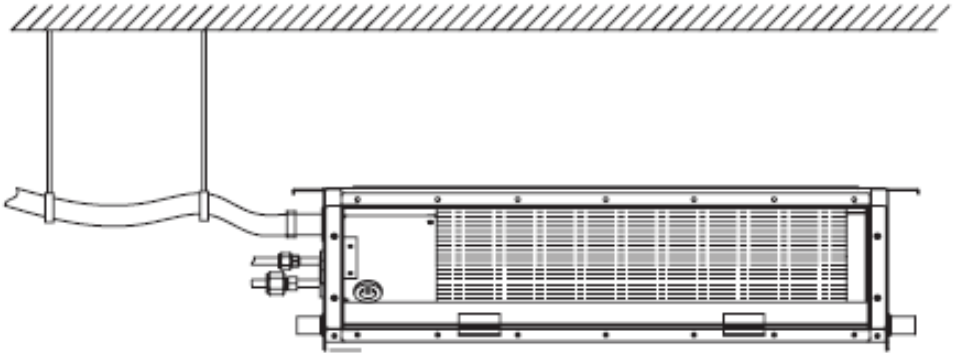

Wrong

5) Insert the drain hose into the drain hole and tighten it with clamps.
6) Wrap the clamps with large amount of sponge for thermal insulation.
7) The drain hose inside the room also should be insulated.

4.2.13 Precautions for the Lift Pipe

The installation height of the lift pipe should be less than 850mm. It is recommended to set an inclination angle 1°～2° for the lift pipe toward the drainage direction. If the lift pipe and the unit form a right angle, the height of the lift pipe must be less than 800mm.

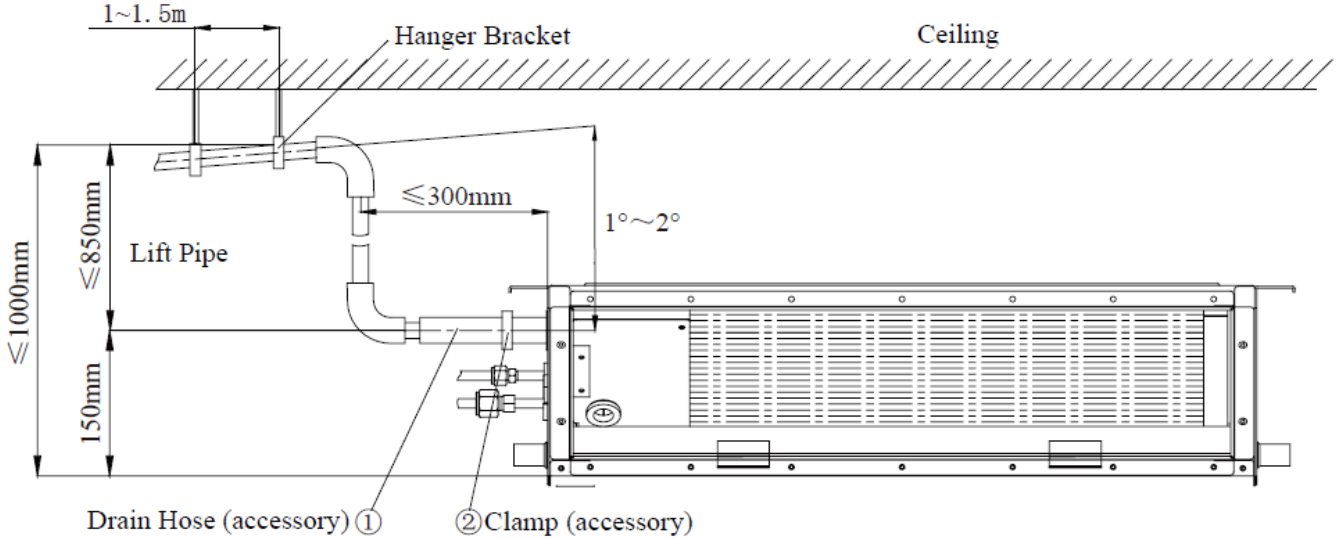

Notes:

①. The inclination height of the drain hose should be within 75mm so that the outlet of the drain hose does not suffer the external force.

②. If multiple drain pipes converge, please follow the installation steps below.

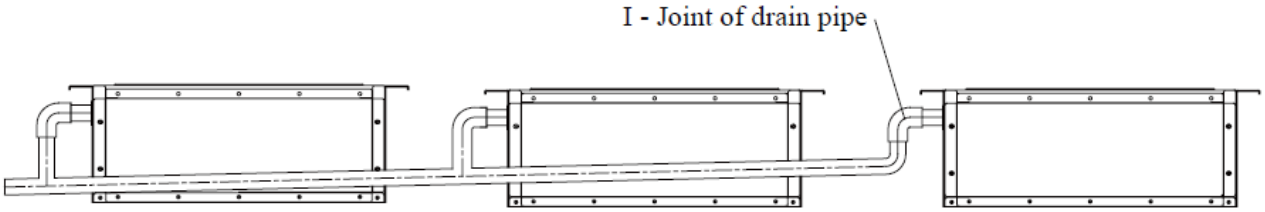

The specification of the joint of the drain pipe should be suitable to the running capacity of the unit

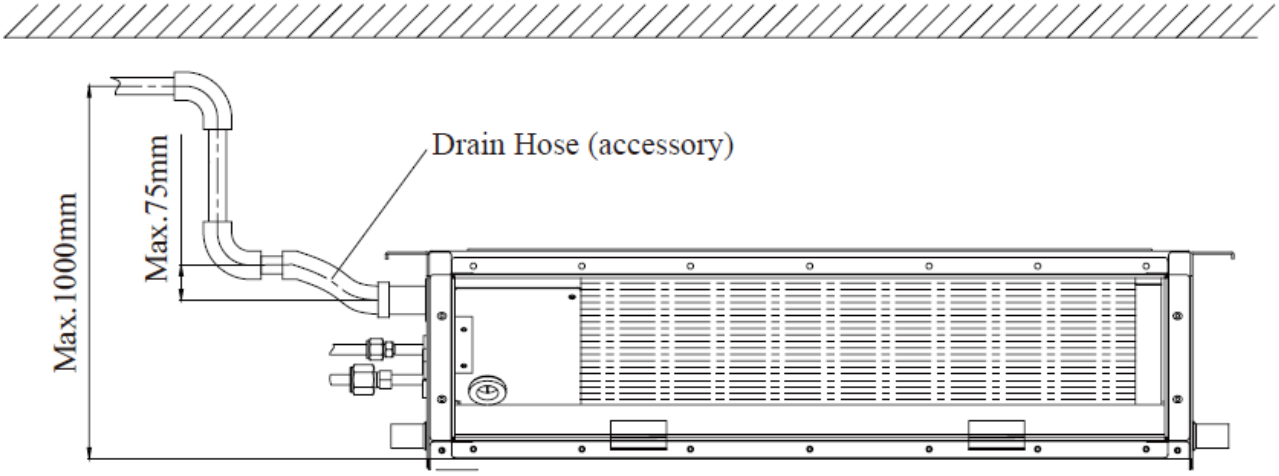

4.3 Installation of Cassette Type

4.3.1 Installation Location and Matters Needing Attention

- The installation of air conditioner unit must be in accordance with national and local safety codes.
- Installation quality will directly affect the normal use of air conditioner unit. The user is prohibited from installation by himself. Please contact your dealer after buying this machine. Professional installation workers will provide installation and test services according to installation manual.
- Do not connect to power until all installation work is completed.

4.3.2 Select install location of the indoor unit

- Obstruct should put away from the intake or outlet vent of the indoor unit so that the airflow can be blown though all the room.
- Make sure that the installation had accord with the requirement of the schematic diagram of installation spaces.
- Select the place where can stand 4 times of the weight of the indoor unit and would not increase the operating noise and oscillate.
- The horizontally of the installation place should be guaranteed.
- Select the place where easy drains condensate water, and easy connects with outdoor unit.
- Make sure that there are enough space for care and maintenance. Make sure that the weight between the indoor unit and ground is above 1800mm.
- When installing the hanger bolts, check if the install place can stand the weight 4 times of the unit's. If not, reinforce before installation. (Refer to the install cardboard and find where should be reinforced)

There will be lots of lampblack and dust stick on the top, heat exchanger and water pump in dining room and kitchen, which would reduce the capacity of heat exchanger, lead water leakage and abnormal operation of the water pump.

The following treatment should be taken under this circumstance:

- Ensure that the smoke trap above cooker has enough capacity to obviate lampblack to prevent the indraft of the lampblack by the air conditioner.
- Keep the air conditioner far from the kitchen so that the lampblack would not be indraft by the air conditioner.

Important notice:

- To guarantee the good performance, the unit must be installed by professional personnel according with this instruction.
- Please contact the local Gree special nominated repair department before installation. Any malfunction caused by the unit that is installed by the department that is not special nominated by Gree would not deal with on time by the inconvenience of the business contact.

4.3.3 Outline Dimension Drawings of the Indoor Unit

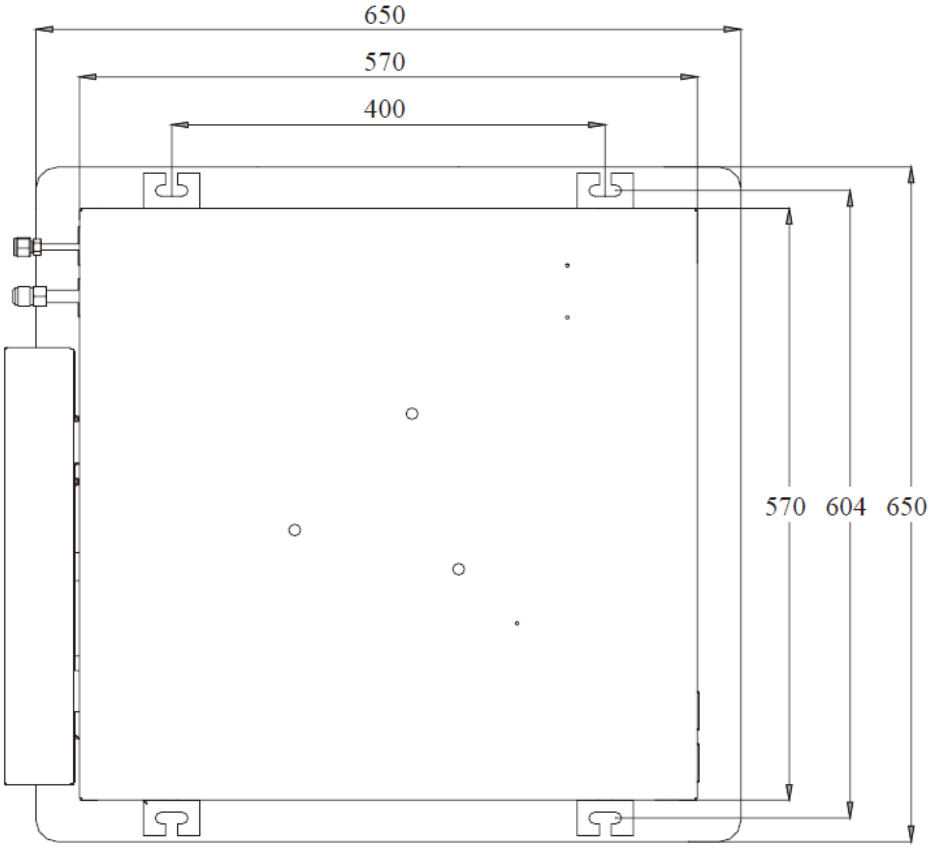

GKH(12)BA-K3DNA2A/I; GKH(18)BA-K3DNA2A/I

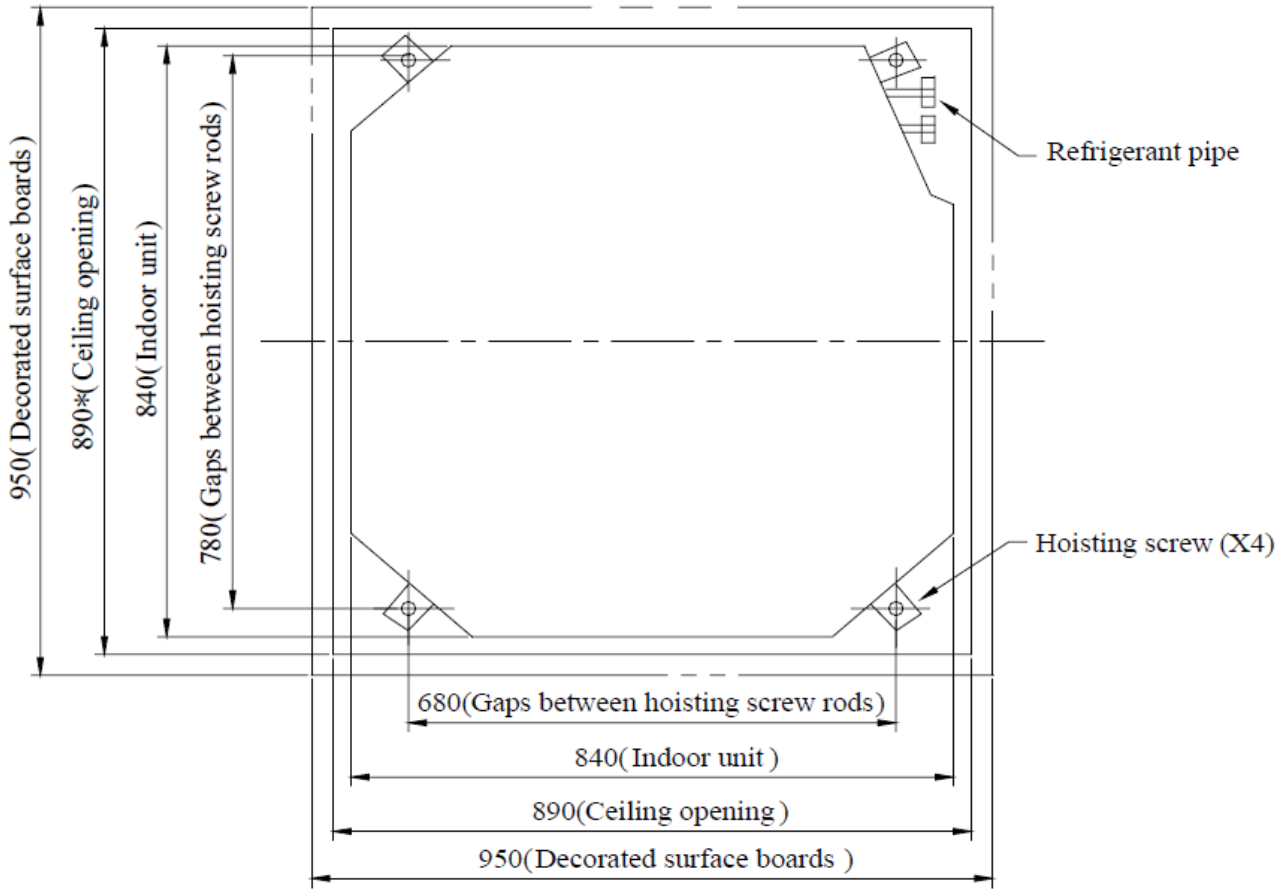

GKH(12)BA-K3DNA1A/I; GKH(18)BA-K3DNA1A/I; GKH(24)BA-K3DNA1A/I

4.3.4 Installation and Servicing Space

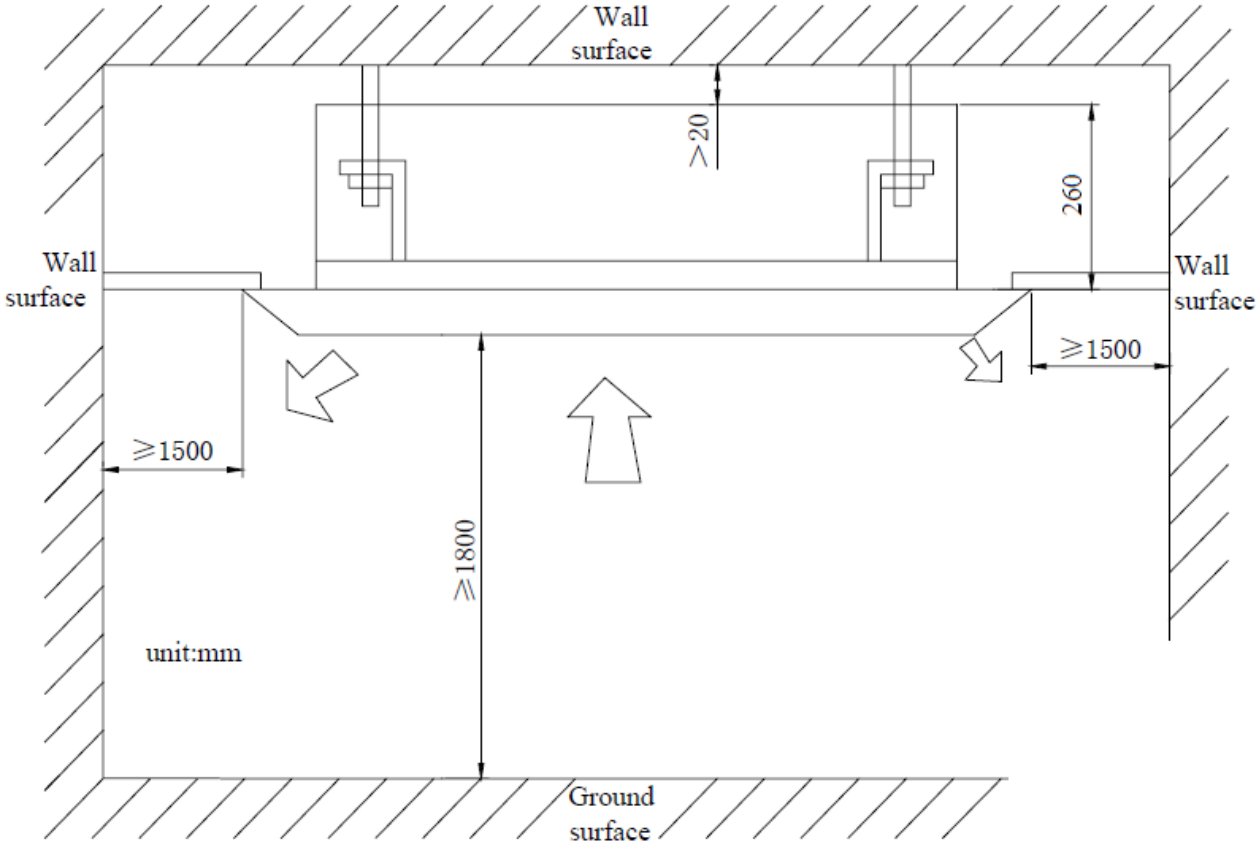

◆ The drilling of holes in the ceiling must be done by the professional personnel.

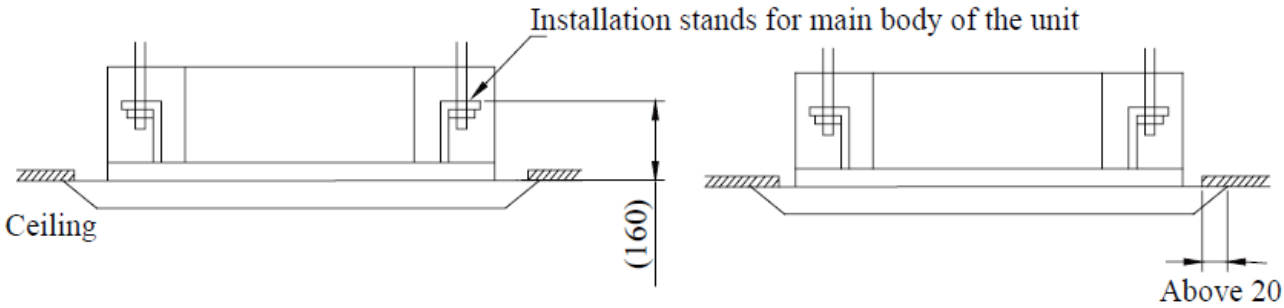

4.3.5 Installation of the Indoor Unit

1) The primary step for install the indoor unit.

◆ When attach the hoisting stand on hoisting screw, do use nut and gasket individually at the upper and lower of the hoisting stand to fix it. The use of gasket anchor board can prevent gasket break off.

2) Use install cardboard

◆ Please refer to the install cardboard about the dimension of ceiling opening.

◆ The central mark of the ceiling opening is marked on the install cardboard.

◆ Install the install cardboard on the unit by bolt (3 piece), and fix the angle of the drainage pipe at the outlet vent by bolt.

3) Adjust the unit to the suitable install place.

4) Check if the unit is horizontal.

◆ Inner drainage pump and bobber switch are included in the indoor unit, check if 4 angle of every unit are horizontal by water lever. (If the unit is slant toward the opposite of the coagulate water flow, there may be malfunction of the bobber switch and lead water drop.)

5) Backout the gasket anchor board used to prevent gasket break off and tighten the nut on it.

6) Backout the install cardboard.

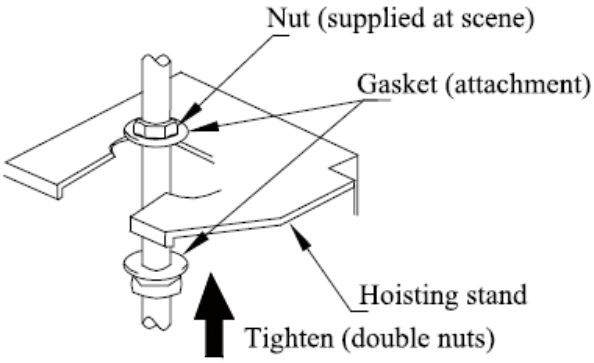

[Fix the hoisting stand firmly]

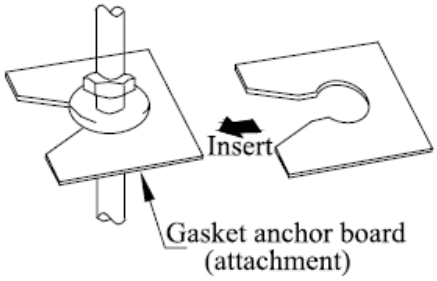

[Fix the gasket firmly]

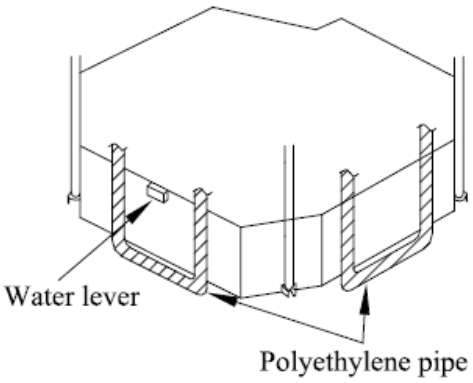

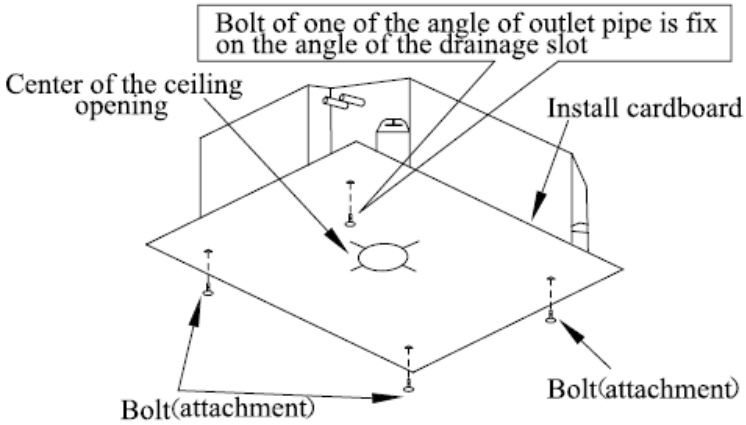

[Fix the install cardboard]

Note:

Please do tighten the nuts and bolts to prevent air conditioner break off.

4.3.6 Drainage hose

1) Install the drain hose

- The diameter of the drain hose should be equal or bigger than the connection pipe's. (The diameter of polythene pipe: Outer diameter 25mm Surface thickness ≥ 1.5mm)
- Drain hose should be short and drooping gradient should at less 1/100 to prevent the formation of air bubble.
- If drain hose cannot has enough drooping gradient, drain raising pipe should be added.
- To prevent bent of the drain hose, the distance between hoisting stand should is 1 to 1.5m.

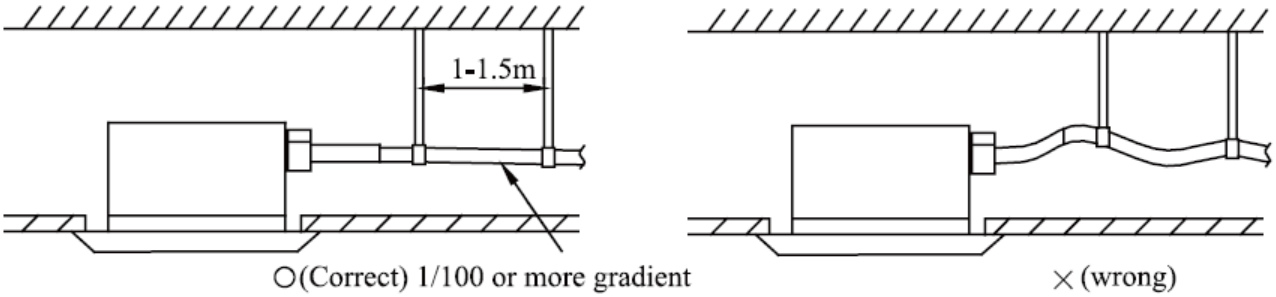

- Use the drain hose and clamp attached. Insert the drain hose to the drain vent, and then tighten the clamp.
- Entwine the big sponge on the clamp of drain hose to insulate heat.
- Heat insulation should be done to indoor drain hose.

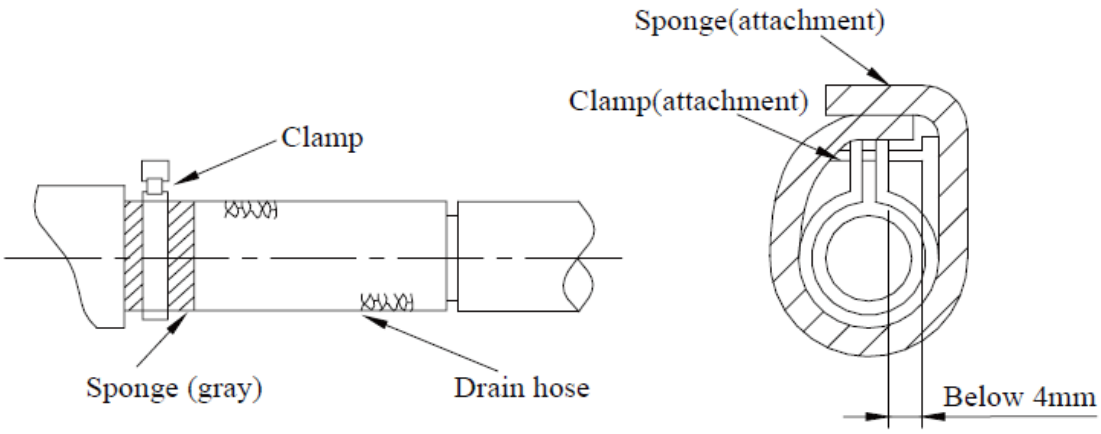

2) Drain stepup pipe note

- The install height of the drain raising pipe should less than 280mm.
- The drain raising pipe should form a right angle with the unit, and distance to unit should not beyond 300mm.

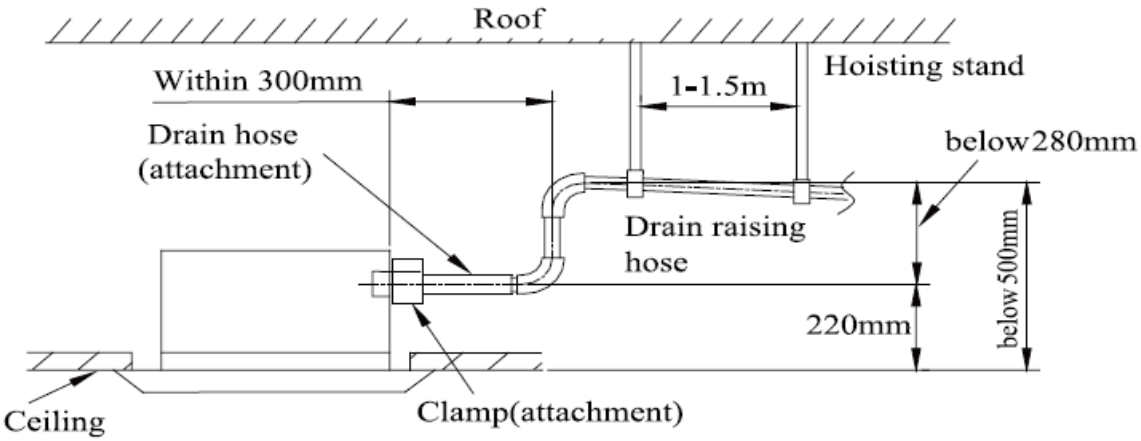

3) Instruction

- The slant gradient of the attached drain hose should be within 75mm so that the drain hole doesn't have to endure the unnecessary outside force.

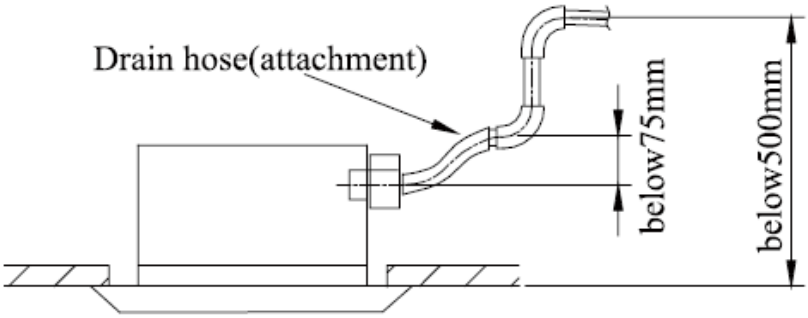

- Please install the drain hose according to the following process if several drain hoses join together.

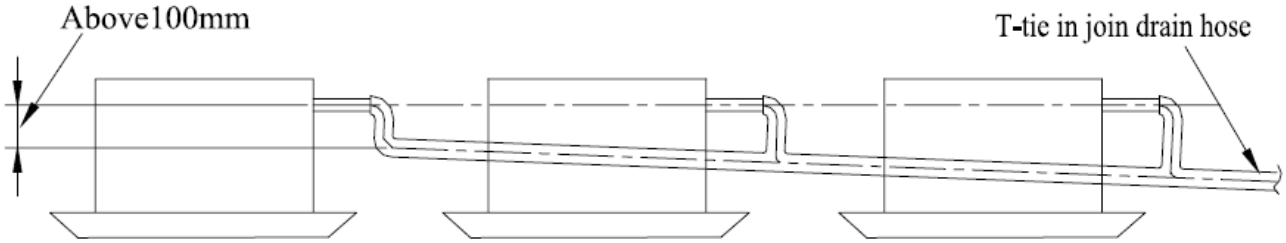

The specs of the selected join drain hose should fits the running capacity of the unit.

4) Check the smoothness of drain after installation.

◆ Check the drain state by immitting 600cc water slowly from the outlet vent or test hole.

◆ Check the drain in the state of refrigerating after installation of the electric circuit.

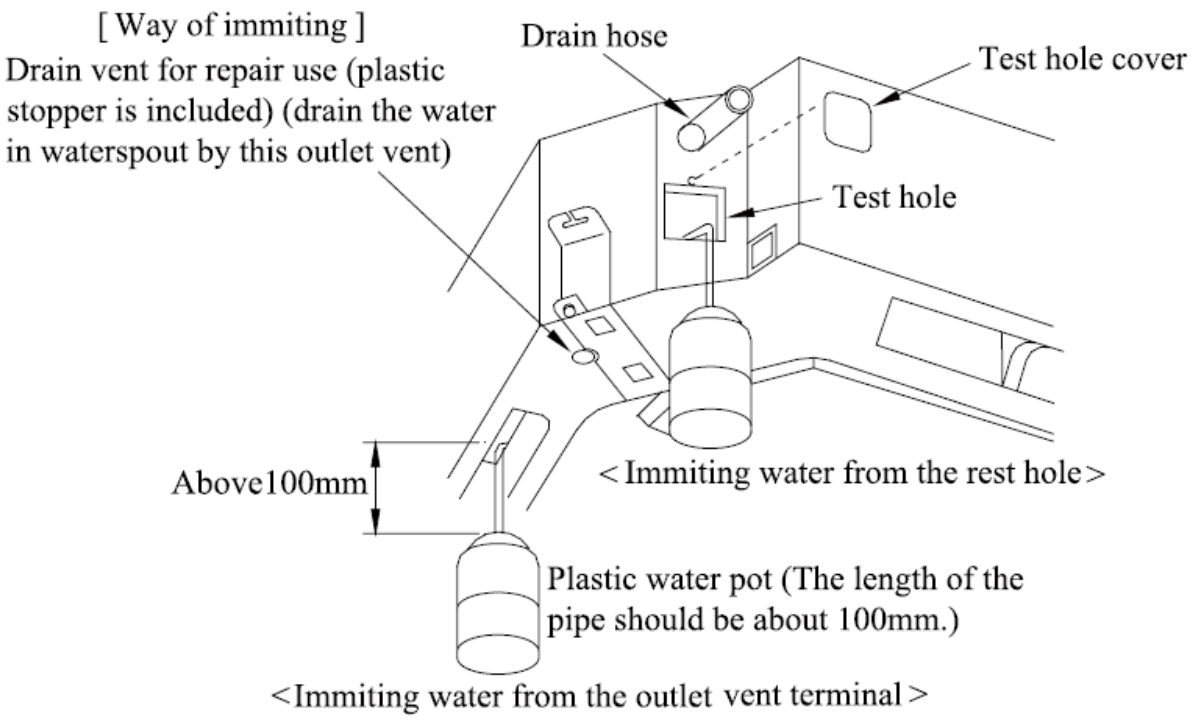

4.4 Installation of Floor Ceiling Type

4.4.1 Important Notices

- The installation of air conditioner unit must be in accordance with national and local safety codes.
- Installation quality will directly affect the normal use of air conditioner unit. The user is prohibited from installation by himself. Please contact your dealer after buying this machine. Professional installation workers will provide installation and test services according to installation manual.
- Do not connect to power until all installation work is completed.

4.4.2 Selection of Installation Location

- Such a place where cool air can be distributed throughout the room.
- Such a place where is condensation water is easily drained out.
- Such a place that can handle the weight of indoor unit.
- Such a place, which has easy access for maintenance.
- Such a place where is permitting easy connection with the outdoor unit.
- Such a place where is 1m or more away from other electric appliances such as television, audio, etc.
- Avoid a location where there is heat source, high humidity or inflammable gas.
- Do not use the unit in the immediate surroundings of a laundry, a bath, a shower or a swimming pool.
- Be sure that the installation conforms to the installation dimension diagram.

4.4.3 Caution for installation where air conditioner trouble is likely to occur

- Where there is too much of oil.
- Where it is acid base area.
- Where there is irregular electrical supply.

4.4.4 Outline Dimension Drawings of the Indoor Unit

When installing the indoor unit, you can refer the paper pattern for installation, and make sure that the drainage side must be 10mm lower than the other side in order to drain the condensation water fluently.

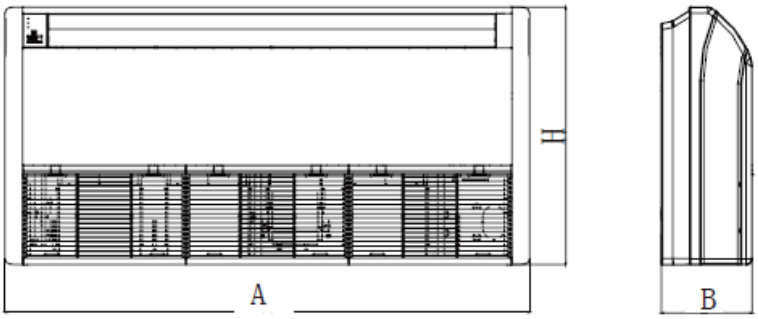

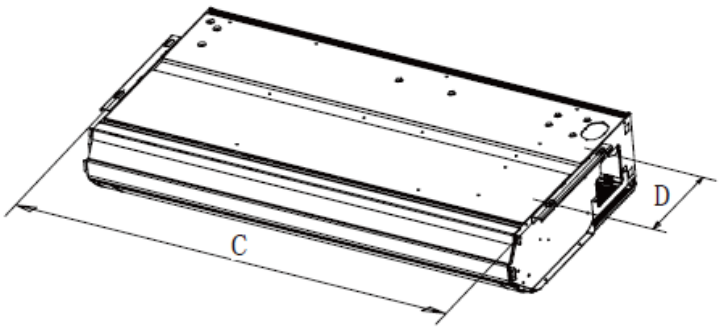

Model	A	B	H	C	D
GTH(09)BA-K3DNA1A/I	1220	225	700	1158	280
GTH(12)BA-K3DNA1A/I					
GTH(18)BA-K3DNA1A/I					
GTH(24)BA-K3DNA1A/I					

4.4.5 Installation and Servicing Space

1) The space around the unit is adequate for ventilation.

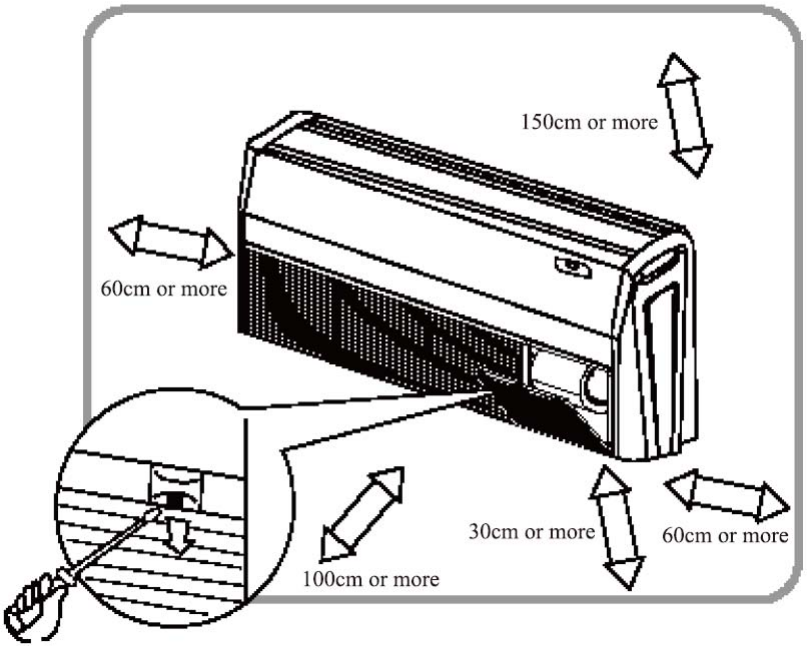

2) Important notice

◆ The unit must be installed by the professional personnel according to this install instruction to ensure the well use.

Please contact the local Gree special nominated repair department before installation. Any malfunction caused by the unit that is installed by the department that is not special nominated by Gree would not deal with on time by the inconvenience of the business contact.

◆ It should be done by professional personnel when the air conditioner unit is moved to other place.

4.4.6 There are 2 styles of installation

◆ **Ceiling type and Floor type**

Each type is similar to the other as follows:

1) Determine the mounting position on ceiling or wall by using paper pattern to indicate indoor frame. Mark the pattern and pull out the paper pattern. (Refer to ①)

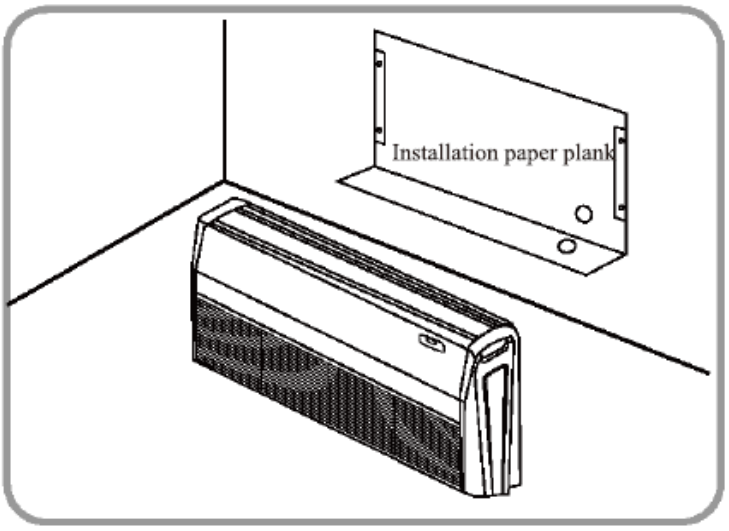

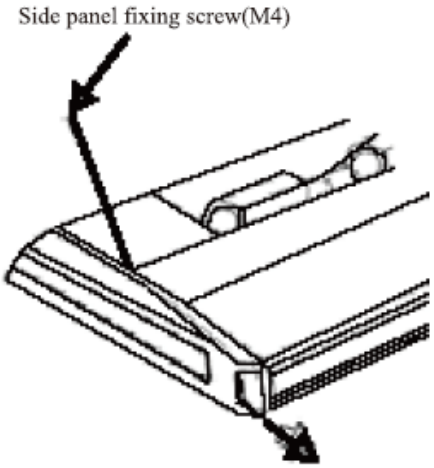

① ②

2) Remove the return grill, the side panel and the hanger bracket from the indoor unit as per procedure bellow.

- Press the fixing knob of the air intake grills, the grilles will be opened wider and then pull them out from the indoor.
- Remove the side panel fixing screw and pull to the front direction (arrow direction) to remove. Side panel fixing screw. (Refer to ②)
- Loosen two hanger bracket setting bolts(M8) on each side for less than 10mm. Remove two hanger bracket fixing bolts (M6) on the rear side. Detach the hanger bracket by pulling it backward(Refer to ④).

3) Set the suspension bolt. (Use W3/8 or M10 size suspension bolts)
   Adjust the distance from the unit to the ceiling slab beforehand (Refer to ③)
4) Fix the hanger bracket to the suspension bolt.

Warning!

- Make sure that extended suspension bolt from the ceiling stays inside the arrowed position. Readjust the hanger bracket when it is outside the arrowed position. (Refer to ⑤)
- Suspension bolt stays inside the cap of indoor unit. Never remove the cap.

5) Lift the unit and slide forward unit the dent. (Refer to ⑥)
6) Screw tightly both hanger bracket-setting bolts (M8). (Refer to ④)
7) Screw tightly both hanger bracket-fixing bolts (M6) to prevent the movement of the indoor unit. (Refer to ④)
8) Adjust the height so that rear side of the drainpipe slightly inclines to improve drainage.

Caution!

- Adjust the height by turning the nut with a spanner.
- Insert the spanner from the hanger bracket opening. (Refer to ⑦)

In case of hanging

- It is possible to install using inward facing hanger brackets by not removing the brackets from the indoor unit. (Refer to ⑧)
- Be sure to use only the specified accessories and parts for installation work.

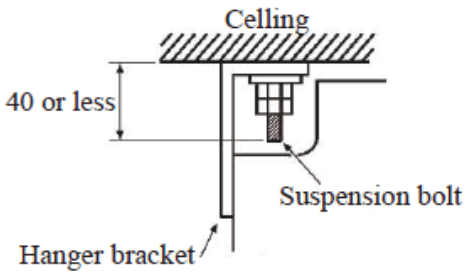
Celling
40 or less
Suspension bolt
Hanger bracket

③

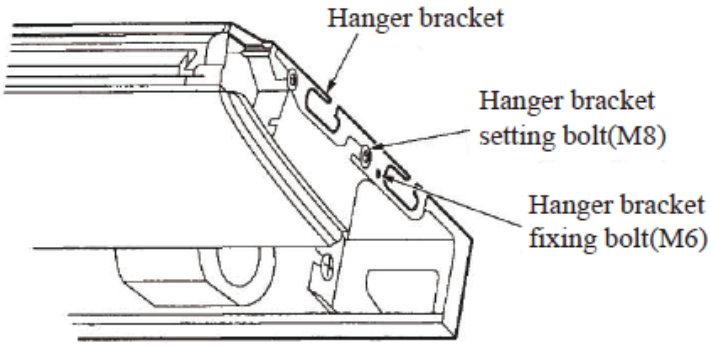
Hanger bracket
Hanger bracket
setting bolt(M8)
Hanger bracket
fixing bolt(M6)

④

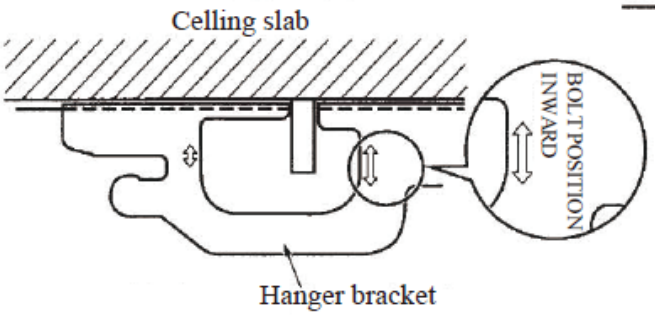
Celling slab
BOLT POSITION
INWARD
Hanger bracket

⑤

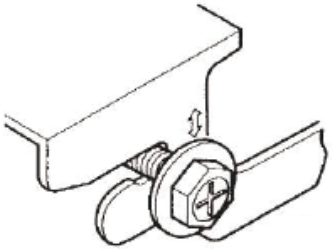

⑥

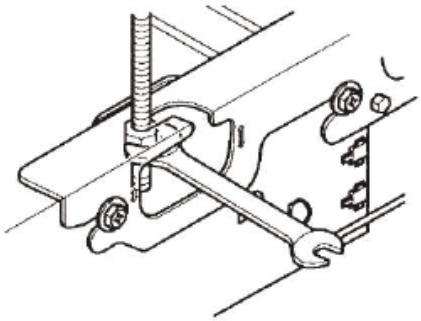

⑦

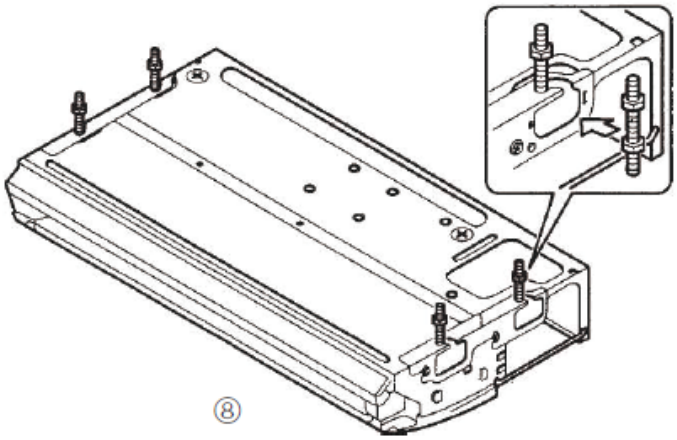

⑧

4.5 Installation of Console Type

4.5.1 Installation Location and Matters Needing Attention

- The installation of air conditioner unit must be in accordance with national and local safety codes.
- Installation quality will directly affect the normal use of air conditioner unit. The user is prohibited from installation by himself. Please contact your dealer after buying this machine. Professional installation workers will provide installation and test services according to installation manual.
- Do not connect to power until all installation work is completed.

4.5.2 Selection of installation location

- Such a place where cool air can be distributed throughout the room.
- Such a place where condensation water is easily drained out.
- Such a place that can handle the weight of indoor unit.
- Such a place which has easy access for maintenance.
- The appliance shall not be installed in the laundry.

4.5.3 There are 2 styles of installation

Ceiling type and Floor type

Each type is similar to the other as follows:

The indoor unit should be sited in a place where:

1) the restrictions on installation specified in the indoor unit installation drawings are met.
2) Both air intake and exhaust have clear paths met.
3) The unit is not in the path of direct sunlight.
4) The unit is away from the source of heat or steam.
5) There is no source of machine oil vapour (this may shorten indoor unit life).
6) Cool(warm) air is circulated throughout the room.
7) The unit is away from electronic ignition type fluorwscent lamps (inverter or rapid stert type) as they may shorten the remote controller range.
8) The unit is at least 1 metre away from any television or radio set(unit may cause interference with the picture or sound).

4.5.4 Cautions foe installation where air conditioner troubles liable to occur

- Where there is toomuch of oil area.
- Where it is acid base area.
- Where there is irregular electrical supply.

4.5.5 Outline Dimension Drawings of the Indoor Unit

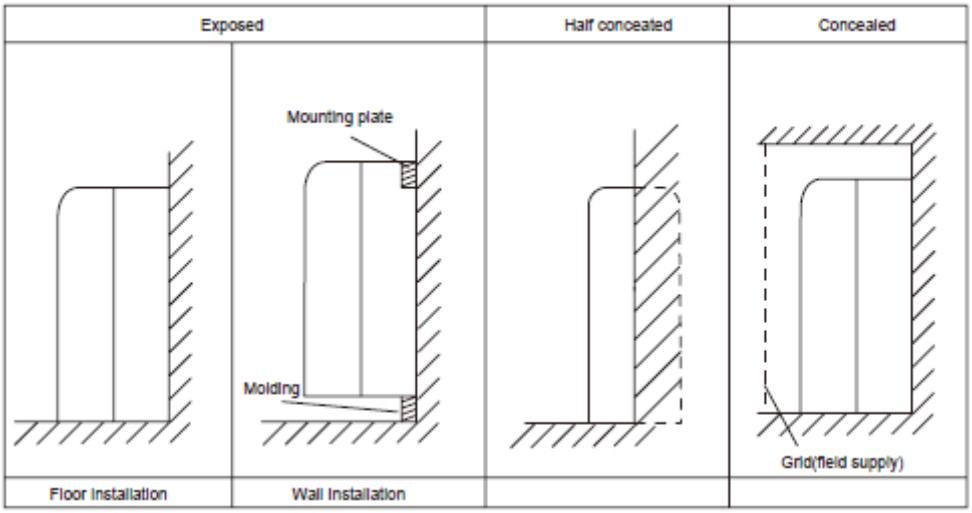

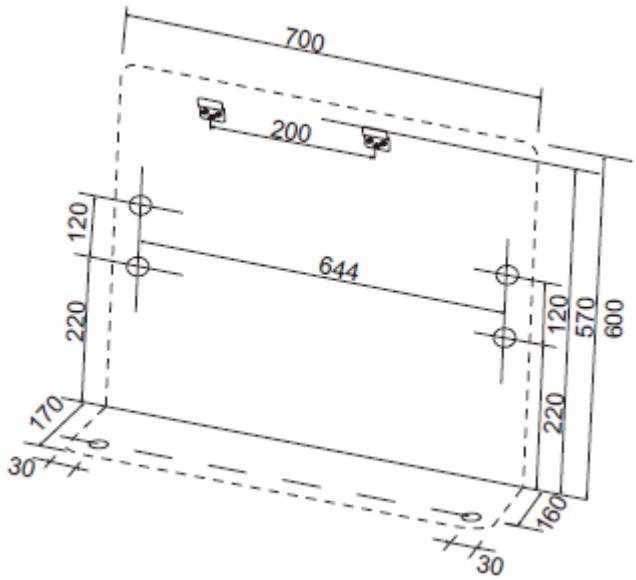

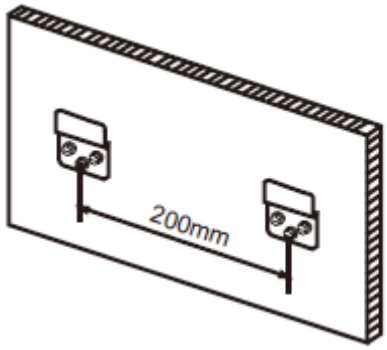

4.5.6 Installation and Servicing Space

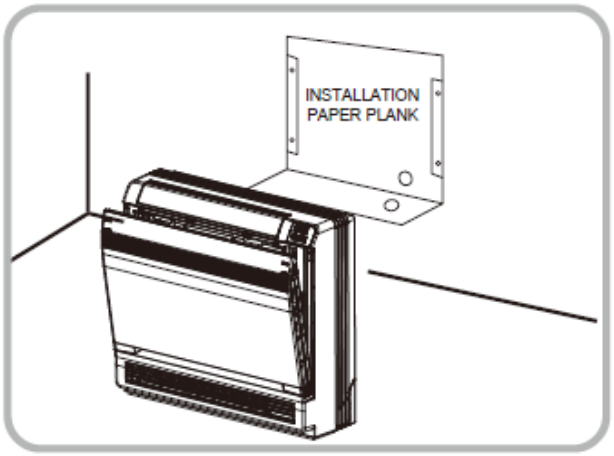

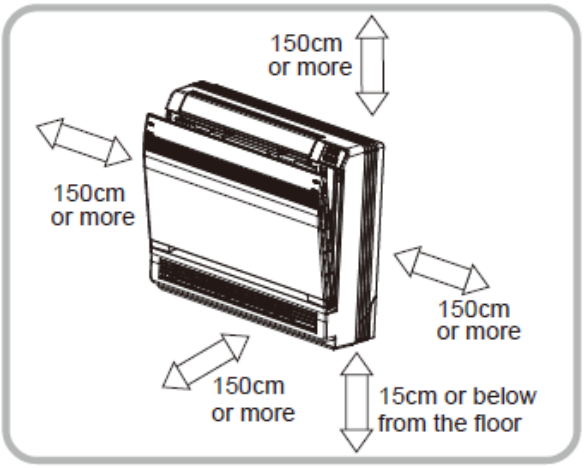

4.5.7 Installation of the Indoor Unit

1) Preparation

- Open the front panel, remove the 4 screws and dismount the front grille while pulling it forward.
- Follow the arrows to disengage the clasps on the front case to remove it.
- Follow the procedure below when removing the slit portions.

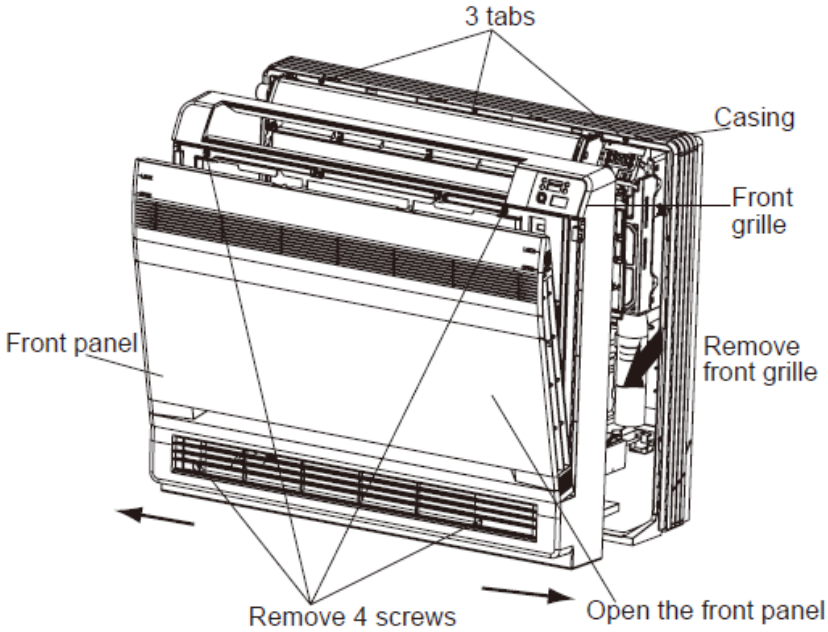

2) For Moldings

- Remove the pillars. (Remove the slit portions on the bottom frame using nippers.)

3) For Side Piping

◆ Remove the pillars.

① Remove the 7screws.

② Remove the upper casing (2 tabs).

③ Remove the left and right casings (2 tabs on each side).

④ Remove the slit portions on the bottom frame and casings using nippers .

⑤ Return by following the steps in reverse order(3>2>1).

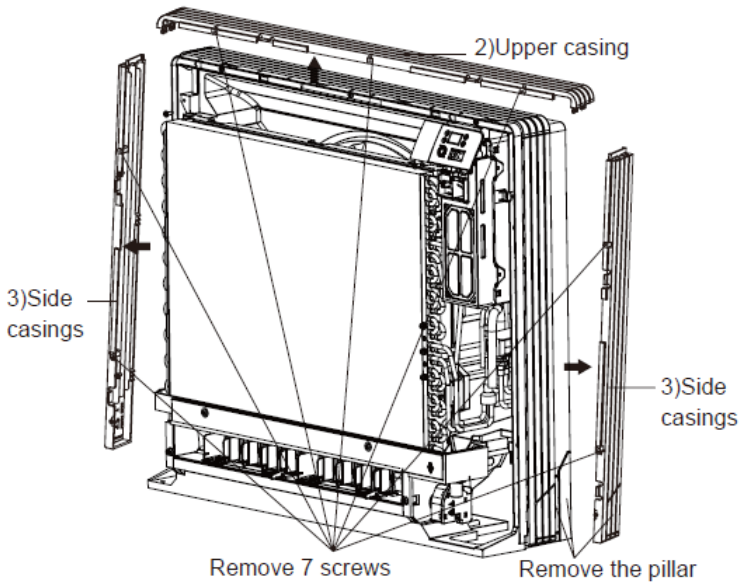

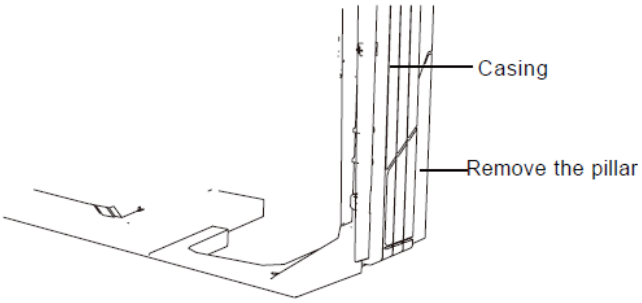

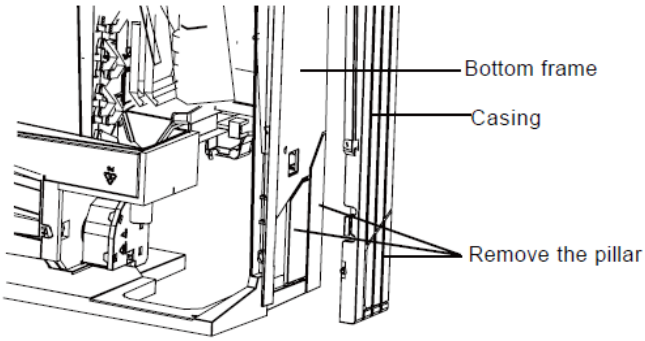

4) Installation

◆ Secure using 6 screws for floor installations.(Do not forget to secure to the rear wall.)

◆ For wall installations, secure the mounting plate using 5 screws and the indoor unit using 4 screws.

The mounting plate should be installed on a wall which can support the weight of the indoor unit.

◆ Temporarily secure the mounting plate to the wall, make sure that the panel is completely level, and mark the boring points on the wall.

◆ Secure the mounting plate to the wall with screws.

Floor Installation

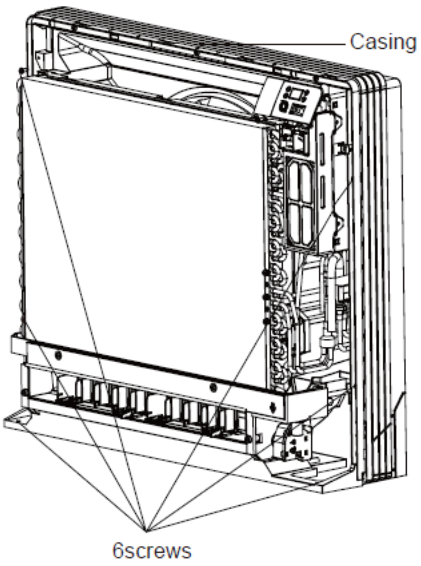

Wall Installation

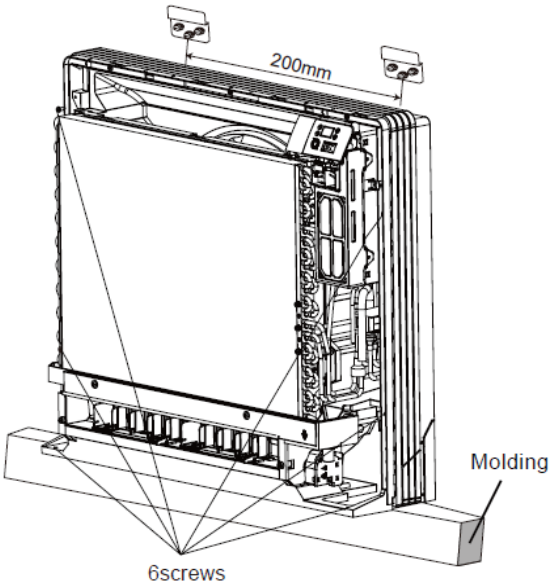

- Once refrigerant piping and drain piping connections are complete, fill in the gap of the through hole with putty. A gap can lead to condensation on the refrigerant pipe, and drain pipe, and the entry of insects into the pipes.
- Attach the front panel and front grille in their original positions once all connections are complete.

4.5.8 Connecting the drain hose

1) Use commercial regid polyvinyl chloride pipe general VP 20 pipe, outer diameter 26mm, inner diameter 20mm for the drain pipe.
2) The drain hose (outer diameter 18mm at connecting end, 220mm long)is supplied with the indoor unit. Prepare the drain pipe picture below position.
3) The drain pipe should be inclined downward so that water will flow smoothly without any accumulation.(Should not be trap.)
4) Insert the drain hose to this depth so it won't be pulled out of the drain pipe.
5) Insulate the indoor drain pipe with 10mm or more of insulation material to prevent condensation.
6) Remove the air filters and pour some water into the drain pan to check the water flows smoothly.

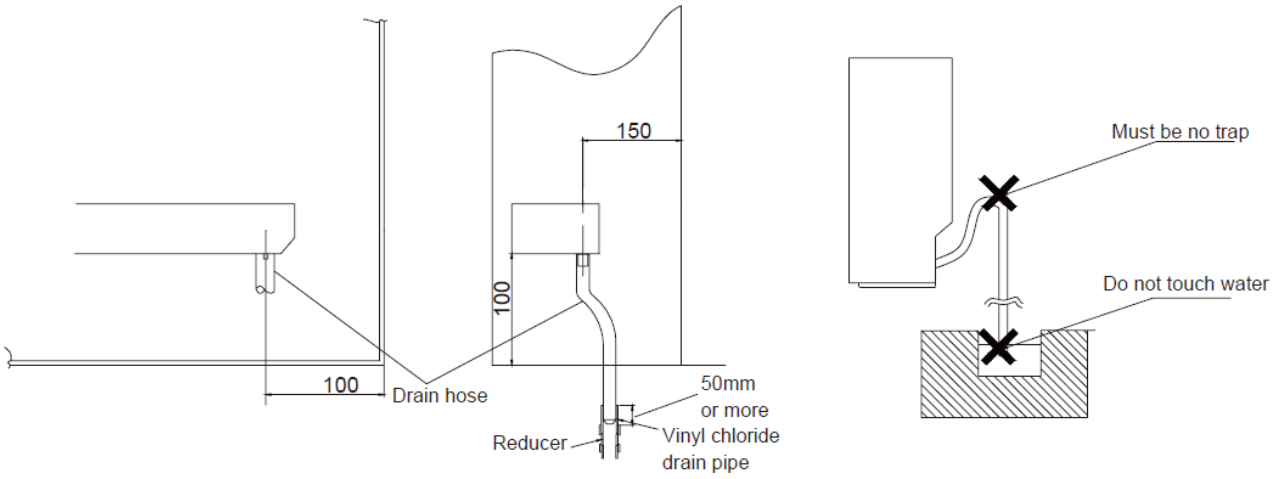

7) Insert the supplied C drain hose into the socket of the drain pan.
8) Fully insert the drain hose until it adheres to a seat of the socket.

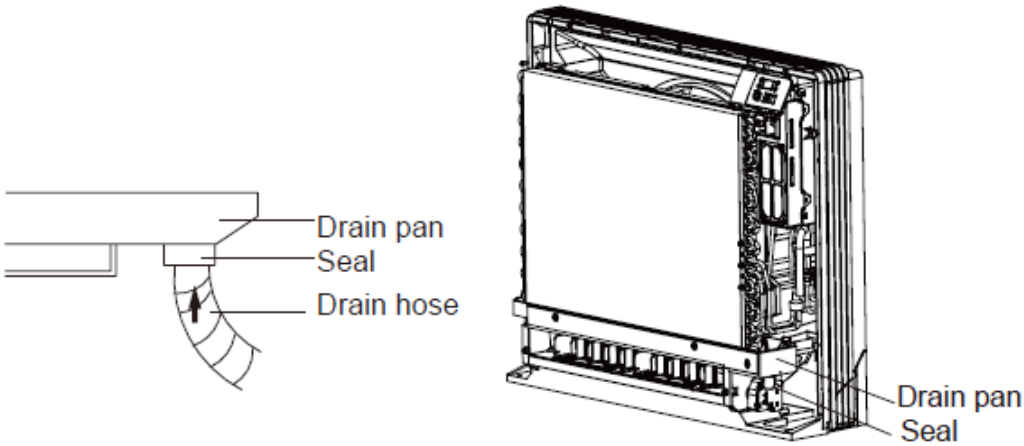

5 BU MODULE INSTALLATION

5.1 Precaution for Installation

- The installation of the air conditioner must be in accordance with the national and local laws and regulations.
- The quality of the installation will affect the capability of air conditioner directly. The installation should be left to the appointed service center. Please contact your dealer after purchasing this machine. Professional installation workers will provide installation and test services according to the installation manual.
- The air conditioner should not install in this place where the small animals exist, because they may cause malfunctions, smoke or fire. Please keep the area around the unit clean.

5.2 Names of Main Parts

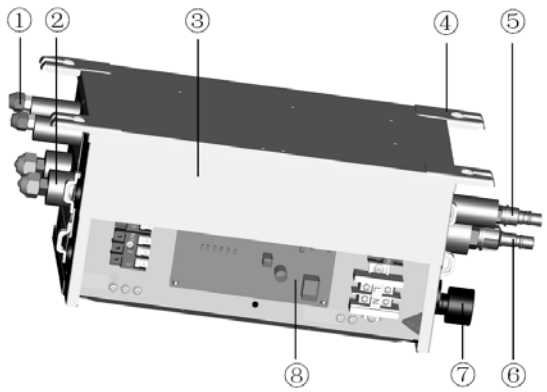

a) FXA2A-K

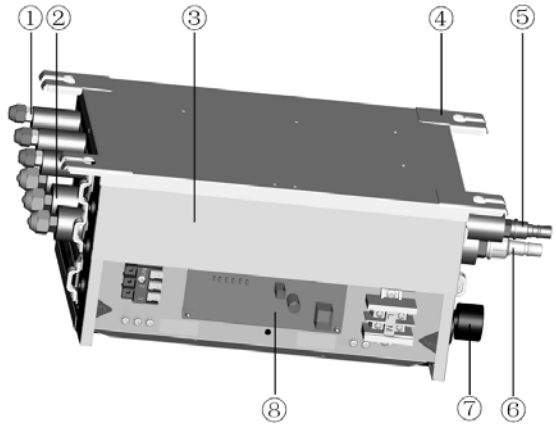

b) FXA3A-K

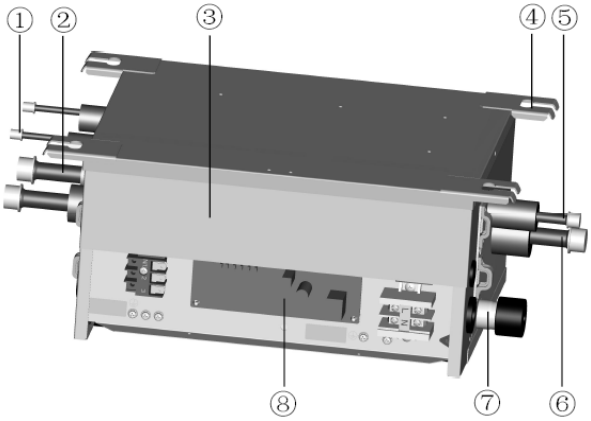

a) FXA2B-K

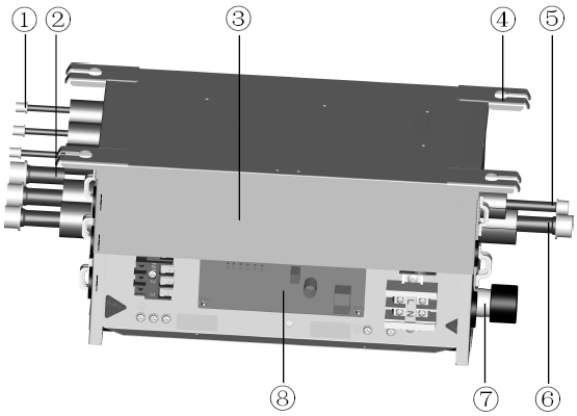

b) FXA3B-K

NO.	①	②	③	④
Name	Liquid piping of indoor unit side	Gas piping of indoor unit side	Electrical equipment plate	Hanger metal
NO.	⑤	⑥	⑦	⑧
Name	Liquid piping of outdoor unit side	Gas piping of outdoor unit side	Drain hole	Printed circuit board

5.3 Combinations for Outdoor and Indoor Units

Sorts		FXA2A-K; FXA2B-K	FXA3A-K; FXA3B-K
No. of connectable BU modules for each outdoor unit	Min	1	1
	Max	3	3
No. of connectable indoor units	Min	1	1
	Max	2	3

5.4 Selection of Installation Location

- The BU module is for indoor use.
- The BU module must be installed on a firm and solid support which can withstand the weight of the module and the mounting surface must be horizontal plane. The BU module can be chosen to install in the ceiling, such as the ceiling of parlor, corridor, balcony, storeroom and etc
- There is enough space for the installation and maintenance.
- Avoid direct sunlight or other heat sources exist
- Do not install in location that is hot or humid for long periods of time.
- Avoid the BU module installed in the bedroom and study, where these places need to be quiet
- BU module cannot be installed in the place of inflammable and explosive materials and severe dust, smoke and the other air pollution, such as the kitchen.
- There is enough space to install drainage pipe, so that the condensed water can be discharged.

Caution!

Installation at the following places might lead to the air conditioner malfunction. If it is unavoidable, please contact the appointed service center.

- A place which is full of machine oil;
- A region with saline-sodic soil near the sea;
- A place where the sulphide fog exists, such as the sulphur spring;
- A place where the high frequency facilities exist, such as radio equipment, electric welder and medical equipment;
- An environment with special conditions.

5.5 Outline Dimension and Servicing Space of FXA2A-K

1) Outline dimension

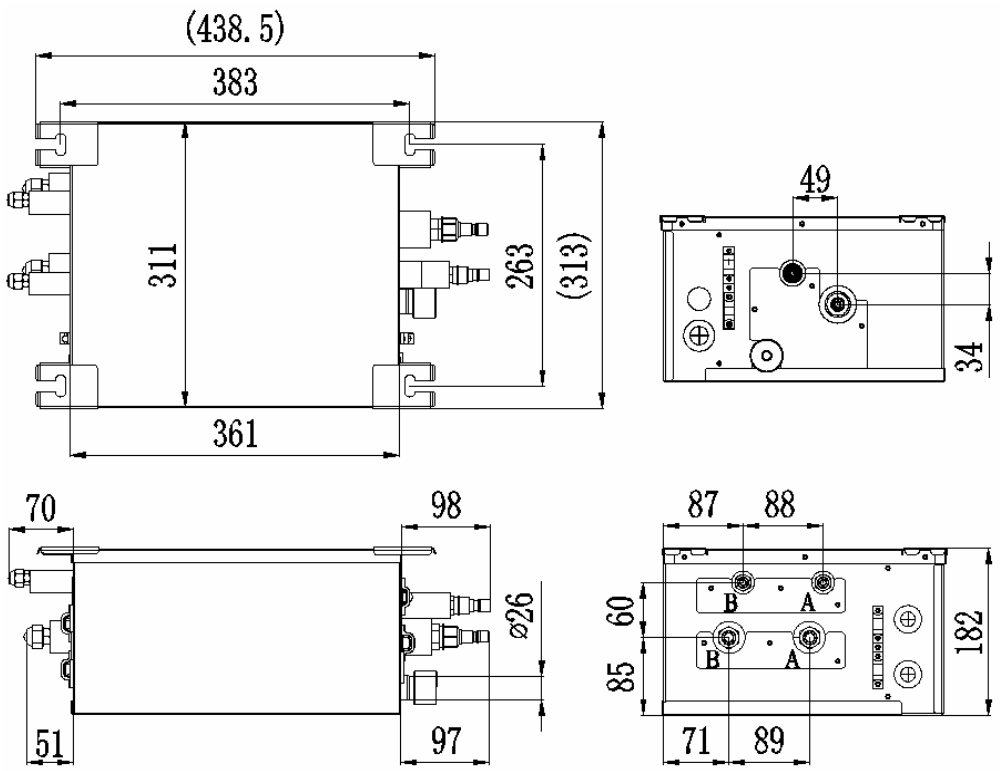

Sorts	Indoor unit side (mm)		Outdoor unit side (mm)
	Port A	Port B	
Liquid pipe	Φ6.35	Φ6.35	Φ9.52
Gas pipe	Φ9.52	Φ9.52	Φ15.9

2) Installation and service space

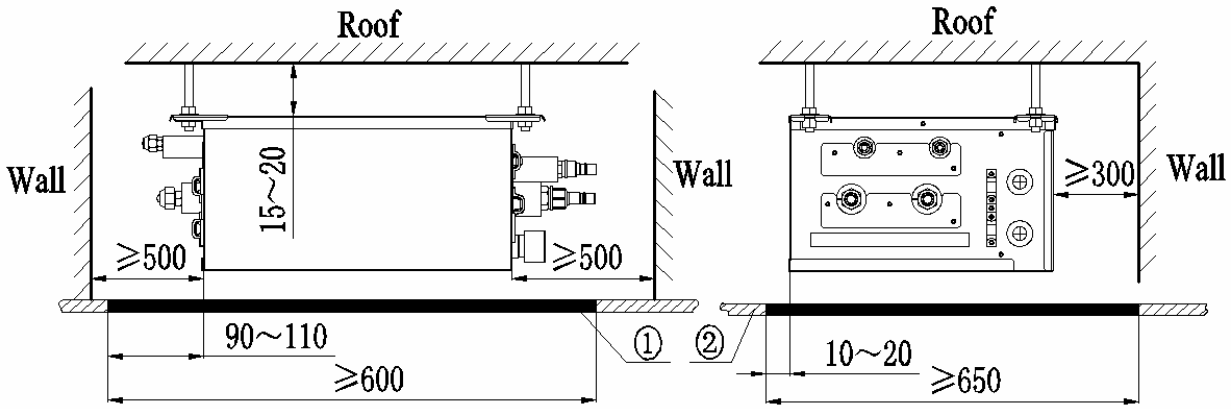

NO.	①	②
Name	Servicing space	Ceiling

5.6 Outline Dimension and Servicing Space of FXA2B-K

1) Outline dimension

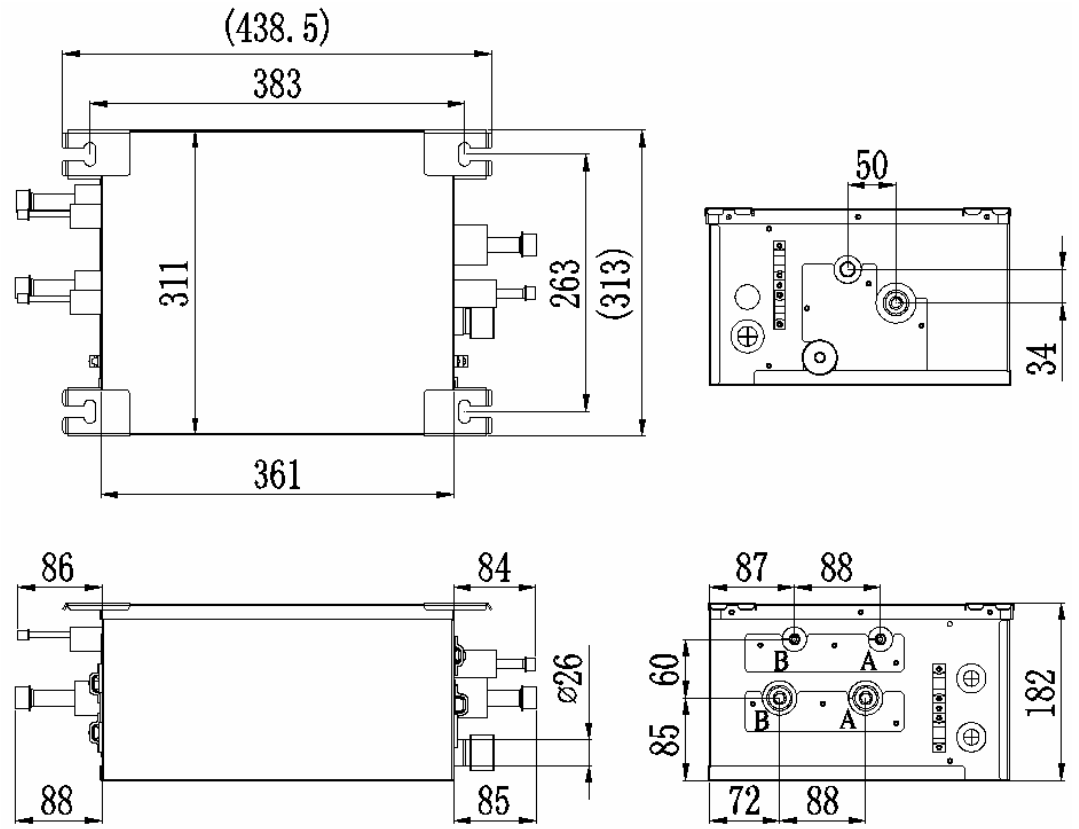

Sorts	Indoor unit side (mm)		Outdoor unit side (mm)
	Port A	Port B	
Liquid pipe	Φ6.2	Φ6.2	Φ9.7
Gas pipe	Φ16.3	Φ16.3	Φ19.3

2) Installation and service space

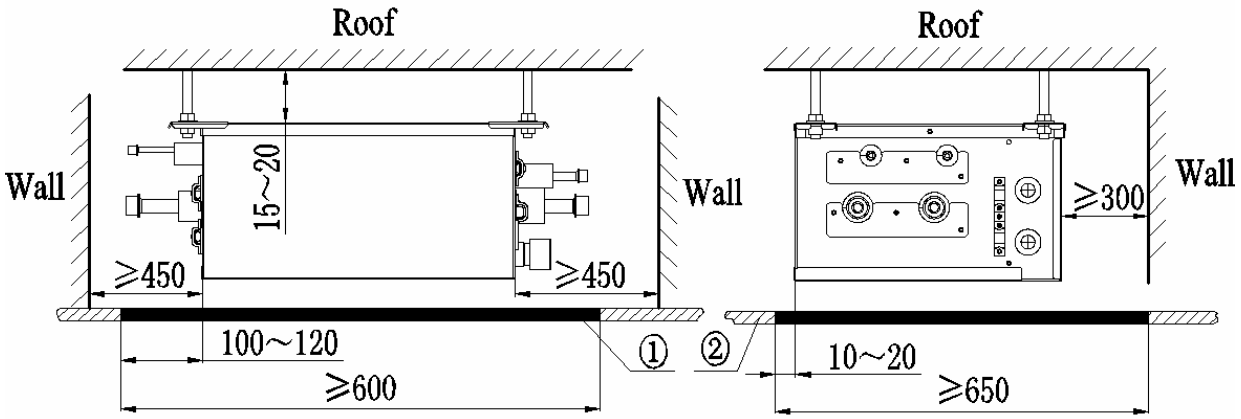

NO.	①	②
Name	Servicing space	Ceiling

5.7 Outline Dimension and Servicing Space of FXA3A-K

1) Outline dimension

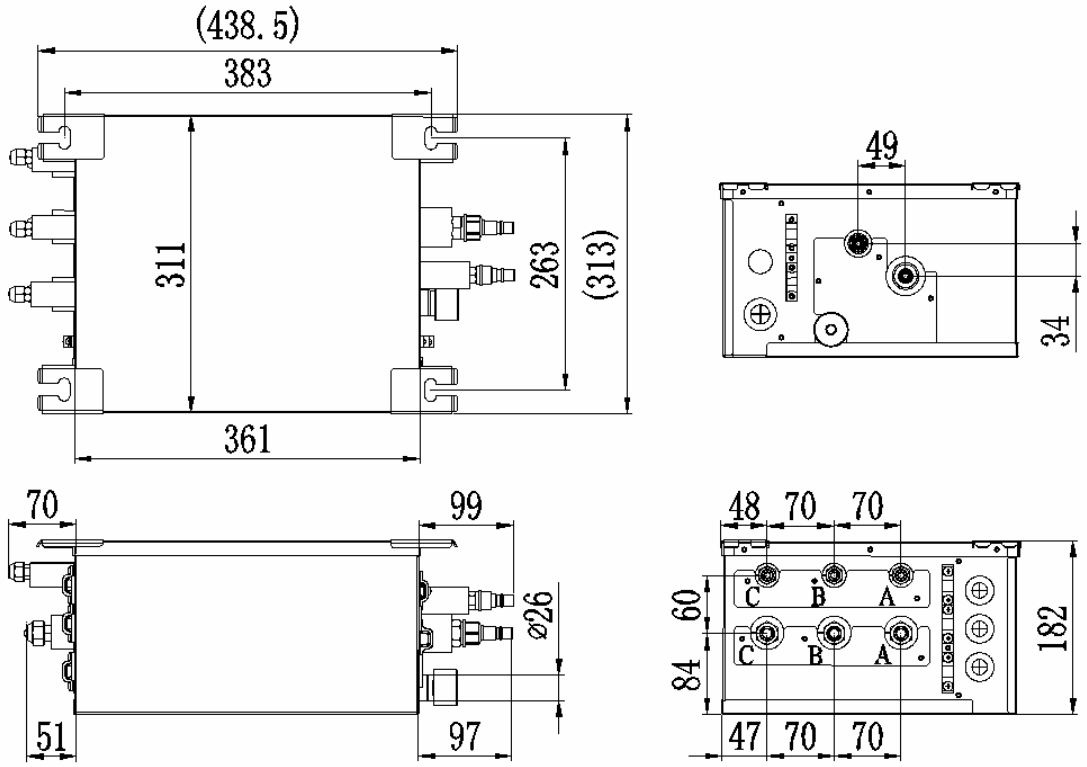

Sorts	Indoor unit side (mm)			Outdoor unit side (mm)
	Port A	Port B	Port C	
Liquid pipe	Φ6.35	Φ6.35	Φ6.35	Φ9.52
Gas liquid	Φ9.52	Φ9.52	Φ9.52	Φ15.9

2) Installation and service space

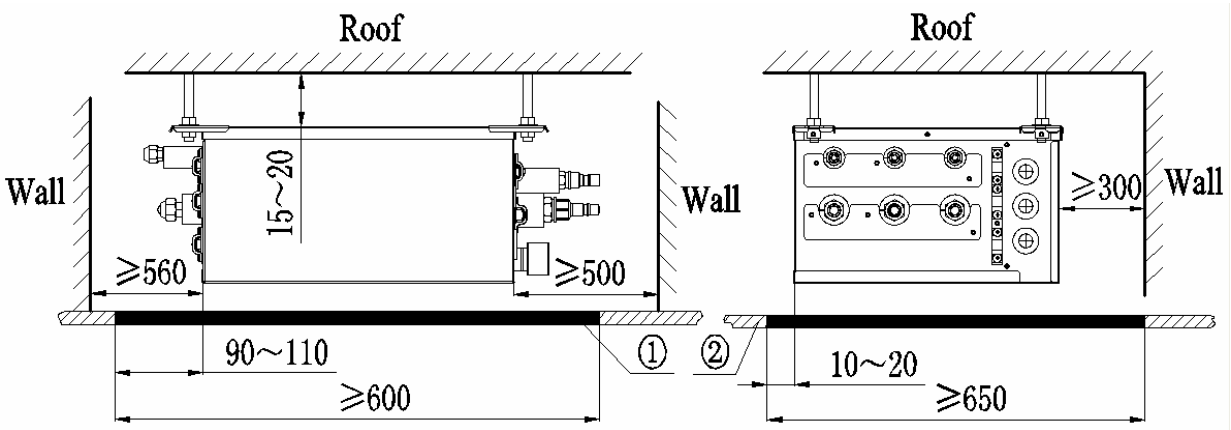

NO.	①	②
Name	Servicing space	Ceiling

5.8 Outline Dimension and Servicing Space of FXA3B-K

1) Outline dimension

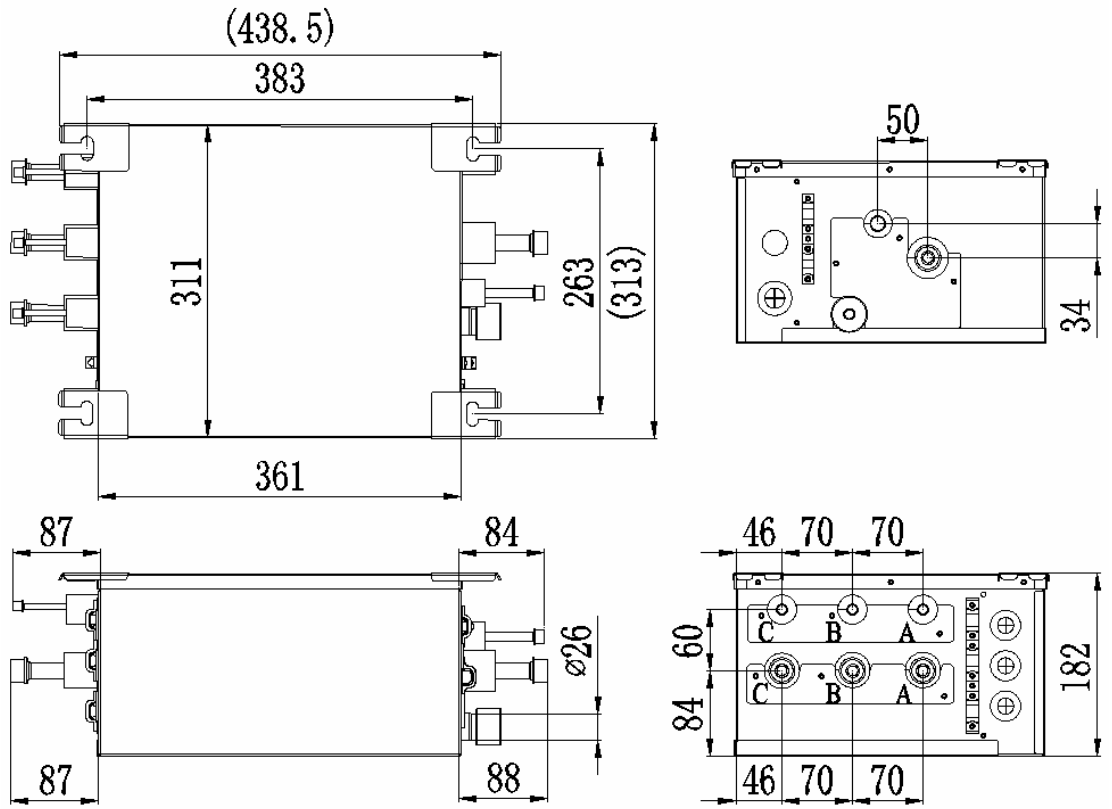

Sorts	Indoor unit side (mm)			Outdoor unit side (mm)
	Port A	Port B	Port C	
Liquid pipe	Φ6.2	Φ6.2	Φ6.2	Φ9.7
Gas liquid	Φ16.3	Φ16.3	Φ16.3	Φ19.3

2) Installation and service space

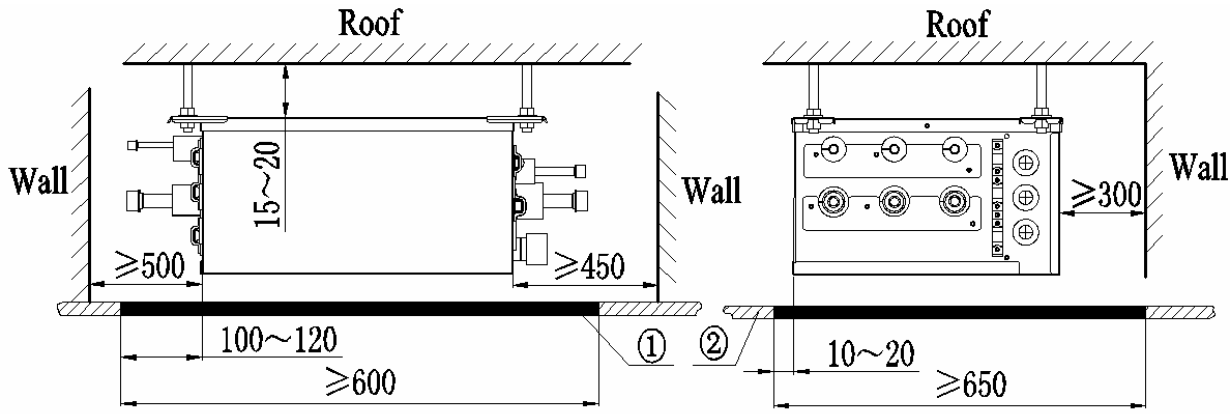

NO.	①	②
Name	Servicing space	Ceiling

5.9 Installation Instruction

1) Check the installation location and ensure it is strength and level. Otherwise, there should be enough space to install drainage pipe, so that the condensed water can be discharged.
2) Reference to the size of hanger metal and drill 4 holes in the installation location.
3) Hang the hanger bolts.

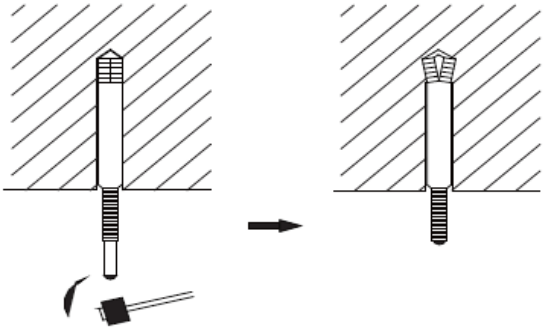

4) Fix the modules securely with the hanger bolts. You can get the M10 or M8 hanger bolts, nuts and washers from the market.

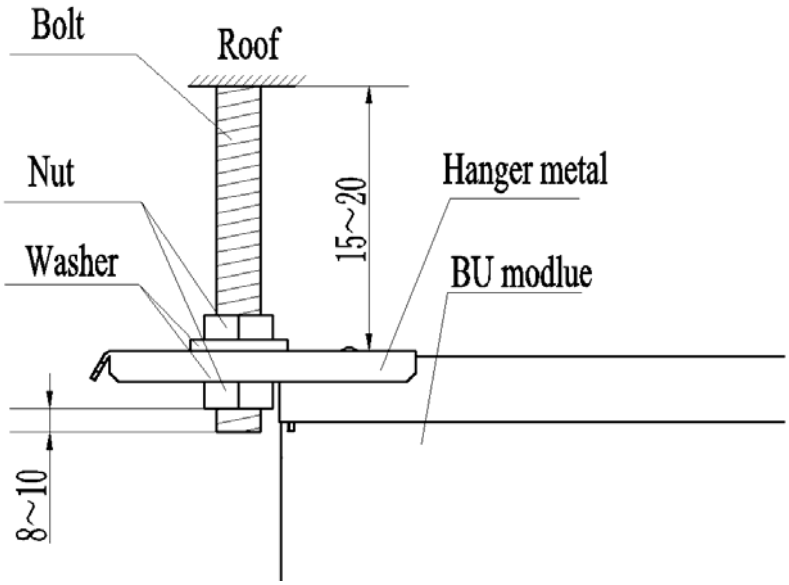

5) Adjusting the nuts position, so that the BU module should be level in front/back and left/right.

6 REFRIGERATION PIPING WORK

6.1 Manifold Mode of Connecting Pipe

1) For only one BU module, there will not be more than three indoor units.

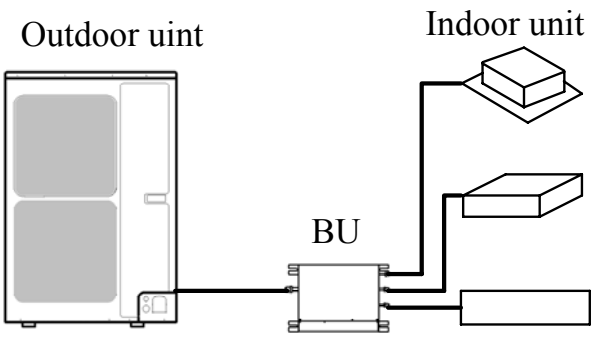

2) For two BU modules, there will not be more than six indoor units.

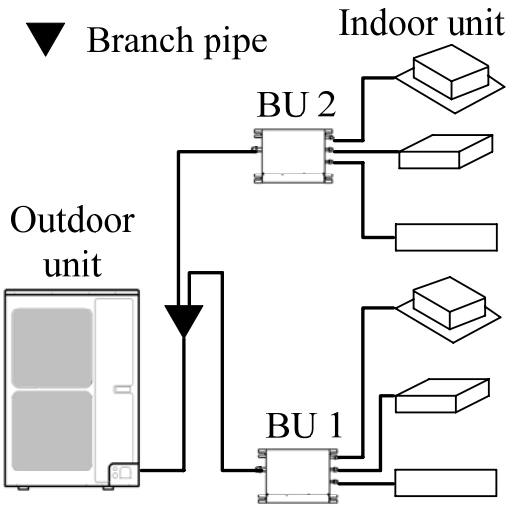

3) For three BU modules, there will not be more than nine indoor units.

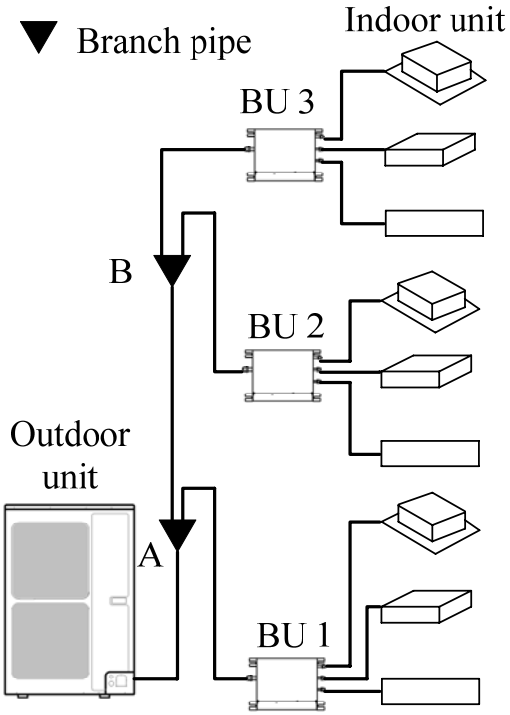

6.2 Allowable Length and Drop Height of Connecting Pipe

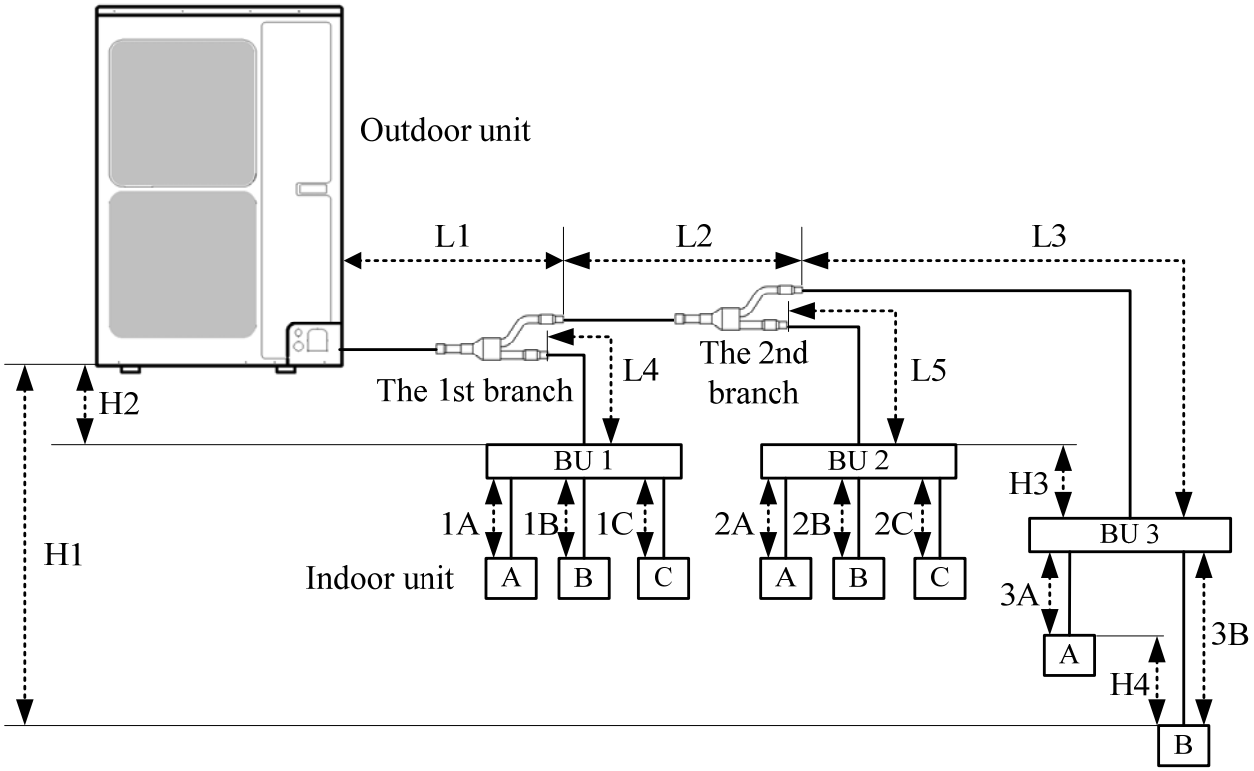

The sorts			The pipes	Length（m）
Maximum allowable length	Between outdoor unit and BU		L1+L2+L3+L4+L5	≤55
	Between indoor unit and BU	GWHD(42S)NK3CO	1A+1B+1C+2A+2B+2C+3A+3B	≤60
		GWHD(48S)NK3CO		≤80
		GWHD(56S)NK3CO		≤90
	Between indoor unit and BU module		1A;1B;1C;2A;2B;2C;3A;3B	≤15
	Between indoor unit and the 1st branch		L4+1B;L2+L5+2A; L2+L3+3B	≤40
Maximum allowable length	Between outdoor and indoor units		H1	≤30
	Between outdoor units and BU		H2	≤30
	Between BU and BU modules		H3	≤15
	Between indoor and indoor units		H4	≤15
Minimum allowable length	Between outdoor and the 1st branch		L1	≥5
	Between BU and the branch		L3;L4;L5	as possible as short

6.3 Dimension of Connecting Pipe

Sorts		Gas Pipe（mm）	Liquid Pipe（mm）
Outdoor unit	GWHD(42S)NK3CO	Φ15.9	Φ9.52
	GWHD(48S)NK3CO		
	GWHD(56S)NK3CO		
Between outdoor unit and the 1st branch	The pipe L1	Φ19.05	Φ9.52
Between the 1st and the 2nd branch	The pipe L2	Φ15.9	Φ9.52

6.4 Connection of Branch Pipe

1) If two or three BU modules used, Y-type branch pipe of FQ01A/A will be chosen.

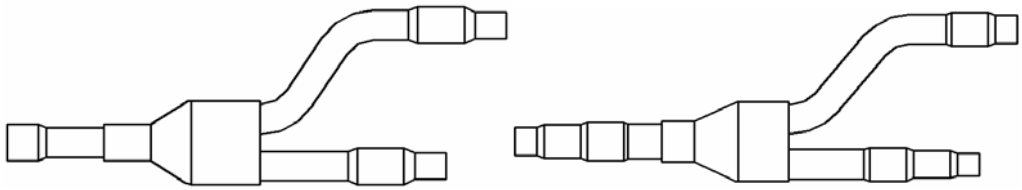

FQ01A/A (Liquid pipe) FQ01A/A (Gas pipe)

2) Y-type branch pipe is equipped with auxiliary tubes to adjust the diameter of different pipes. If the dimension of the pipe selected is different from the dimension of branch pipe joint, Cut the copper tube in the middle with tube cutter and clear up burrs. Please do that as following figure.

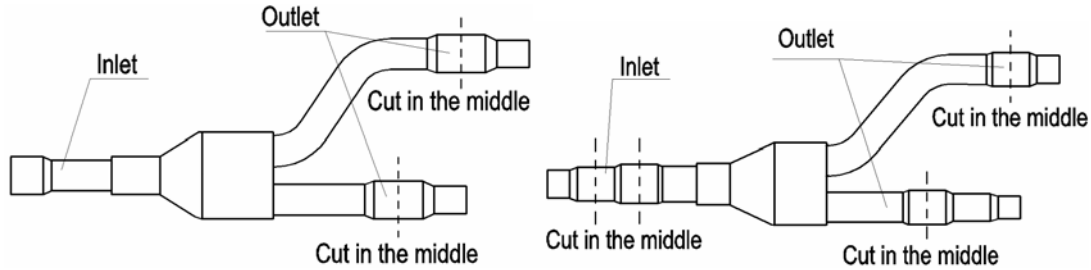

3) Y-type branch pipe must be installed in vertical or horizontal direction. In the inlet of the branch pipe, keep at least 500mm straight pipe.

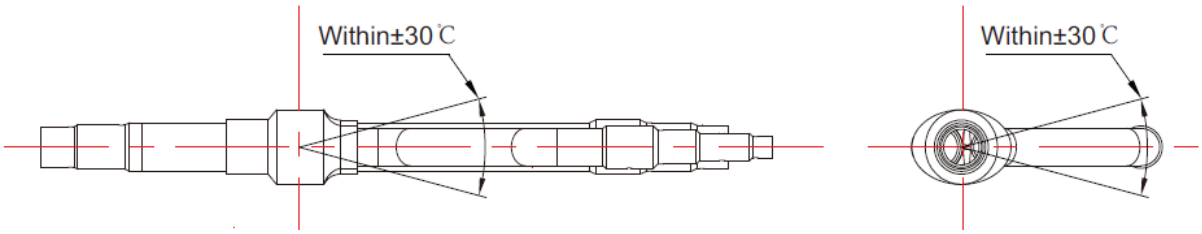

6.5 Design Requirements for Oil Trap

If the height different between the indoor unit and outdoor unit exceeds 6m, one oil trap shall be installed every 6m from lower to upper on the vertical section of gas pipe. The oil trap shall be fabricated into two U-type elbows or one return-type elbow. The height shall be 3~5 times the piping diameter.

See below for details on installation and fabrication of oil trap.

①. The oil trap may be fabricated into U-type or return-type.

②. If outdoor unit is below indoor unit, it is not needed to install oil trap on the vertical pipe of gas piping.

③. If the outdoor unit is below the indoor unit, it is not needed to install oil trap at the highest or lowest position. If the outdoor unit is above the indoor unit, oil trap and stop elbow must be installed at the lowest and highest position of the vertical pipe. See the schematics below:

④. Fabrication dimension of oil trap is as shown below:

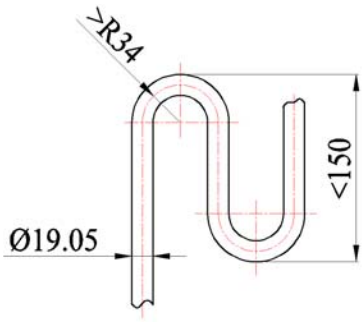

⑤. See the schematics below:

◆ Outdoor unit lower than indoor unit

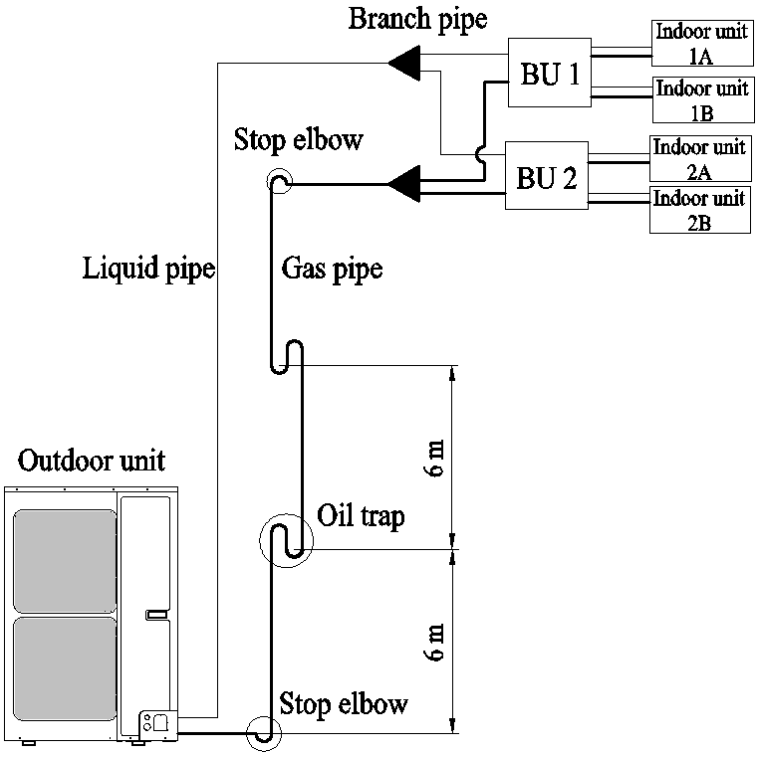

◆ Outdoor unit higher than indoor unit

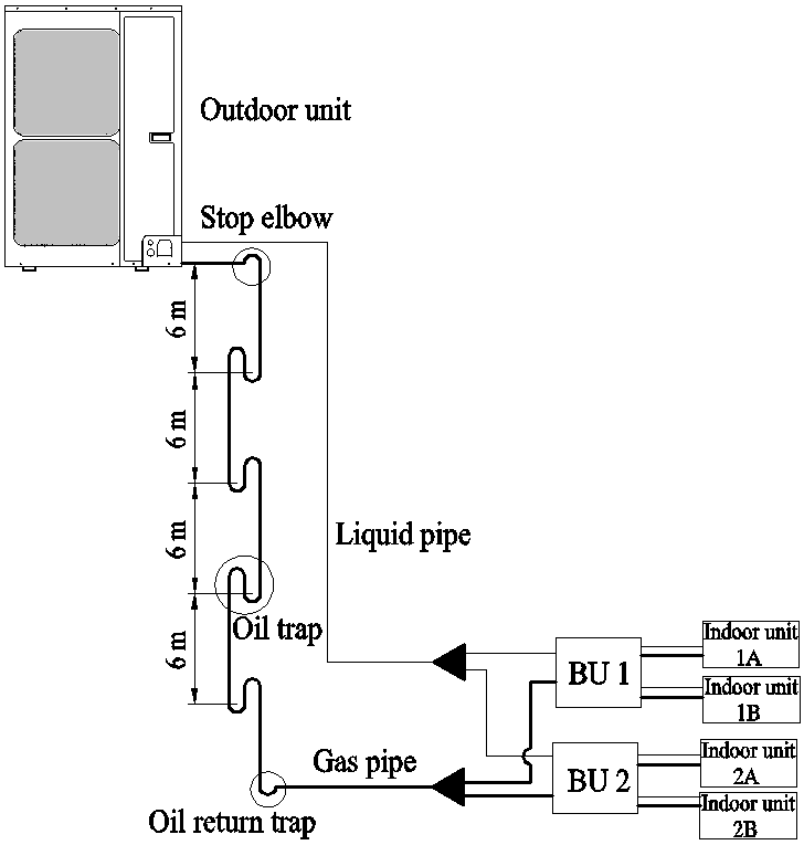

6.6 Connection of Outdoor Unit Refrigerant Pipe

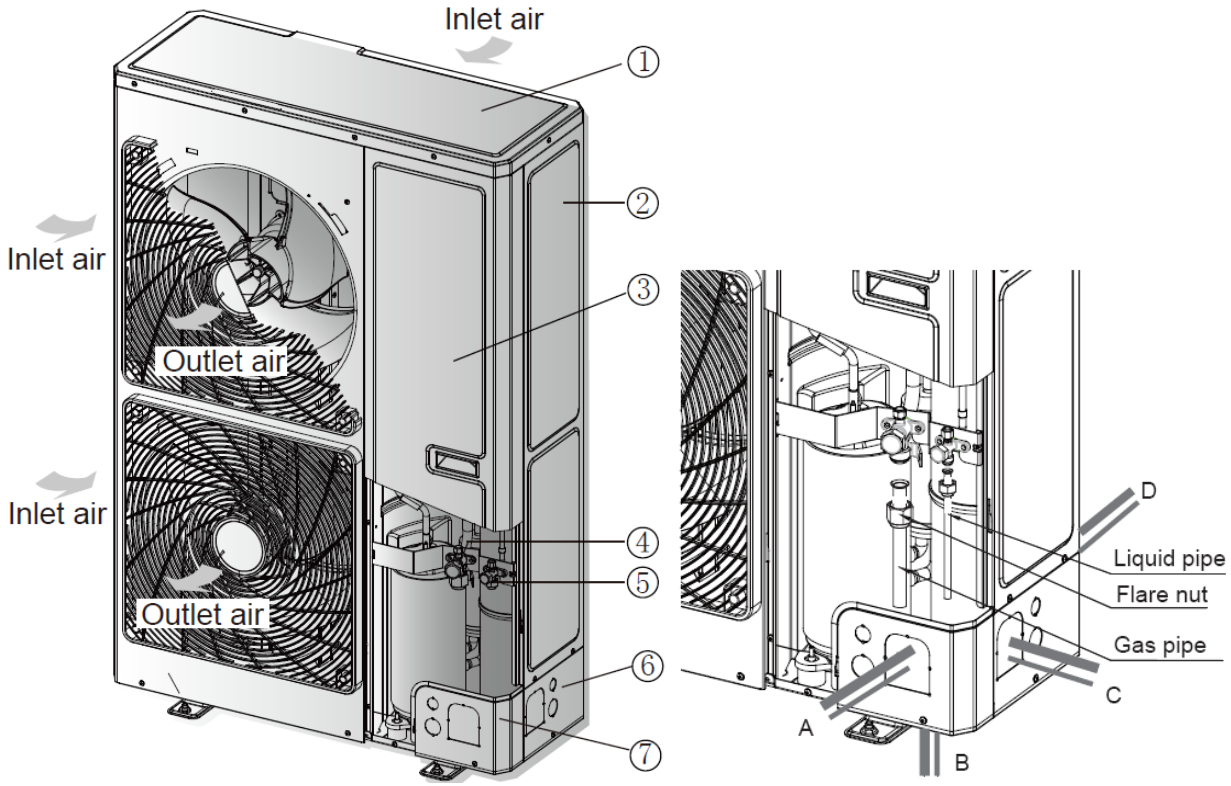

NO.	①	②	③	④
Name	Coping plate	Rear side plate	Front side plate	Gas side stop valve
NO.	⑤	⑥	⑦	
Name	Liquid side stop valve	Right connection board	Front connection board	
NO.	A	B	C	D
Name	Front connection	Bottom connection	Side connection	Rear connection

1) Unscrew the coping plate, front side plate, right connection board and front connection board.
2) The refrigerant pipes can be installed in four directions, please choose the proper direction.
3) Knock the holes in the plate of the chosen direction with the drill and hammer.
4) Connect the pipes to the stop valves.
5) Bend the pipes to go through the knockout holes.
6) Cover the through-holes with sealing materials to prevent the water, dust or small animals going into the outdoor unit.

6.7 Installation of Piping Adapter

If the piping connection size of BU module does not match with that of the outdoor unit and indoor units, it should prevail with the piping connection size of the outdoor unit and indoor units.Install the optional piping adapters to the BU module, so that the piping connection size of BU module can match with that of the outdoor unit and indoor units.

6.8.1 FXA2A-K and FXA3A-K

1) Piping adapter(Optional)

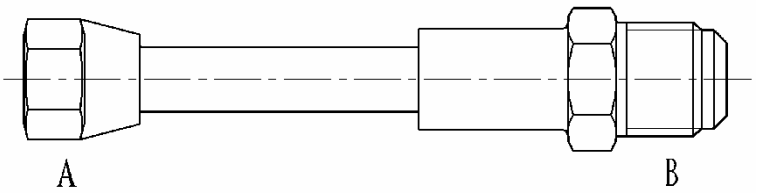

NO.	Name	Port A（mm）	Port B（mm）
1	Φ15.9→Φ19.05	Φ15.9	Φ19.05
2	Φ9.52→Φ12.7	Φ9.52	Φ12.7
3	Φ9.52→Φ15.9	Φ9.52	Φ15.9
4	Φ6.35→Φ9.52	Φ6.35	Φ9.52

2) Install the piping adapter

① Refer to the piping connection size of the outdoor unit and indoor units, the appropriate piping adapter should be adopted.

② Align the flared end of copper tube with the center of pipe joint. Tighten the nuts with hands.

3) Sealing the unconnected port

If the port of BU module indoor side does not connected to one indoor unit, the port must be sealed to prevent refrigerant leaks. Please tighten the flaring nuts of the unconnected port with torque wrench until you hear a “click”.

6.8.2 FXA2B-K and FXA3B-K

1) Piping adapter

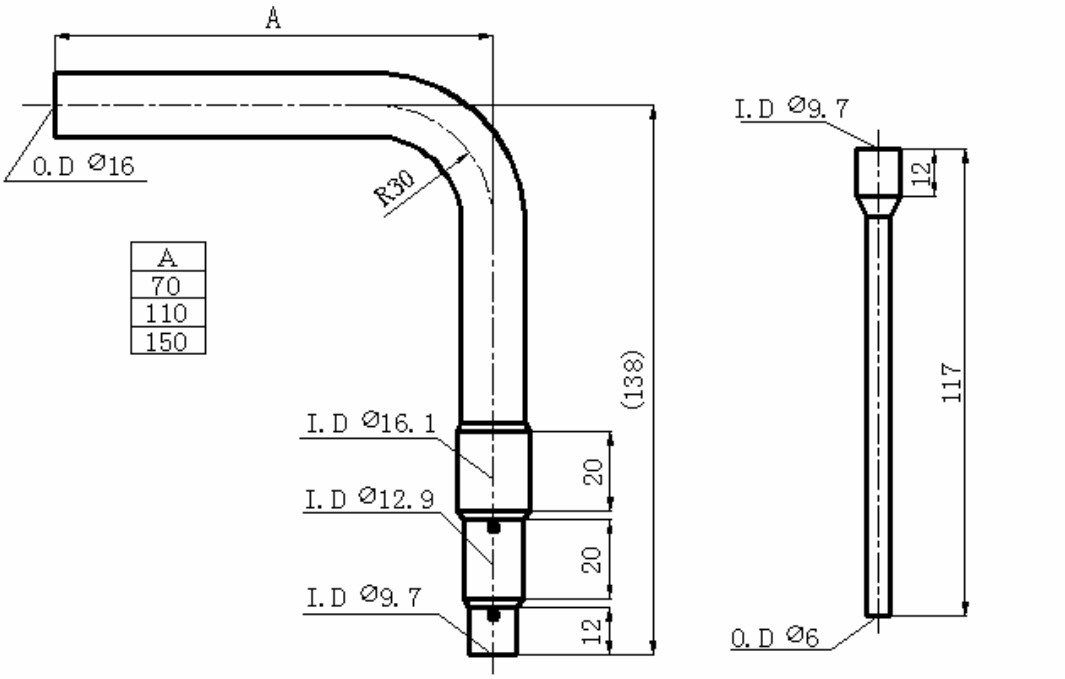

For indoor unit side(Gas)　　For indoor unit side(Liquid)

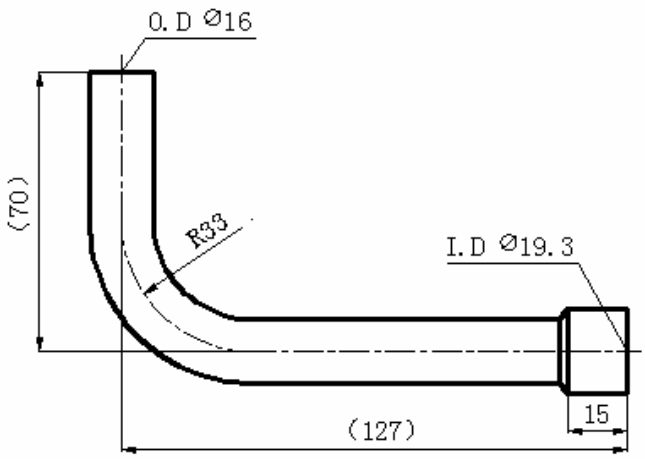

For outdoor unit side(Gas)

2) Brazing the piping adapter

① If the connection size of the pipe adapter selected is different from the piping connection size of BU module, cut the tube of the piping adapter from middle with tube cutter and remove the burrs.

② To avoid heat damage the internal structure of the BU module, wrap the pipes to be brazed with sufficient wet cloths.

③ After brazing, use wet cloths to cool off the pipes to be brazed sufficient.

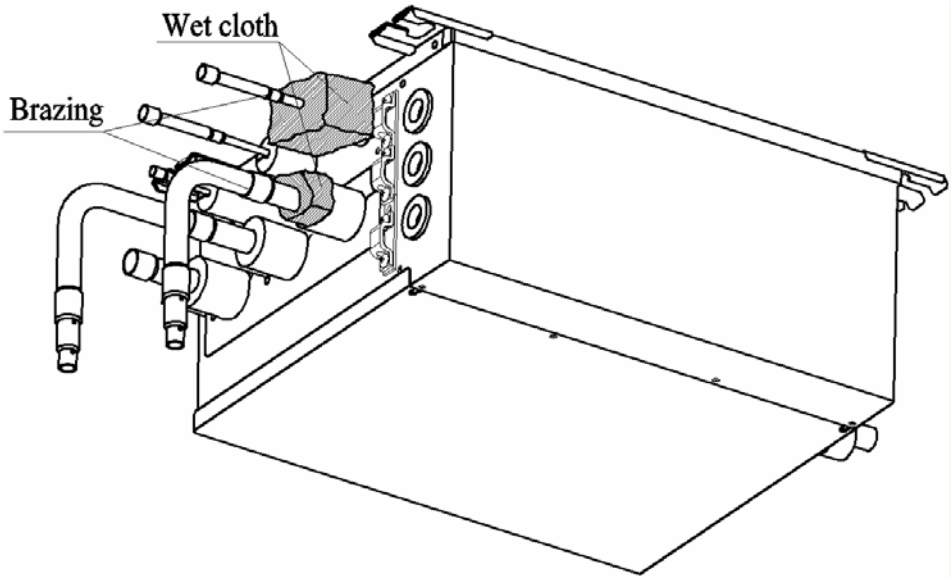

3） Sealing the unconnected port

If the port of BU module indoor side does not connected to one indoor unit, the port must be sealed to prevent refrigerant leaks.

① Select the appropriate piping adapter.

② Pinch the end of the chosen piping.

③ To avoid heat damage the internal structure of the BU module, wrap the pipes to be brazed with sufficient wet cloths.

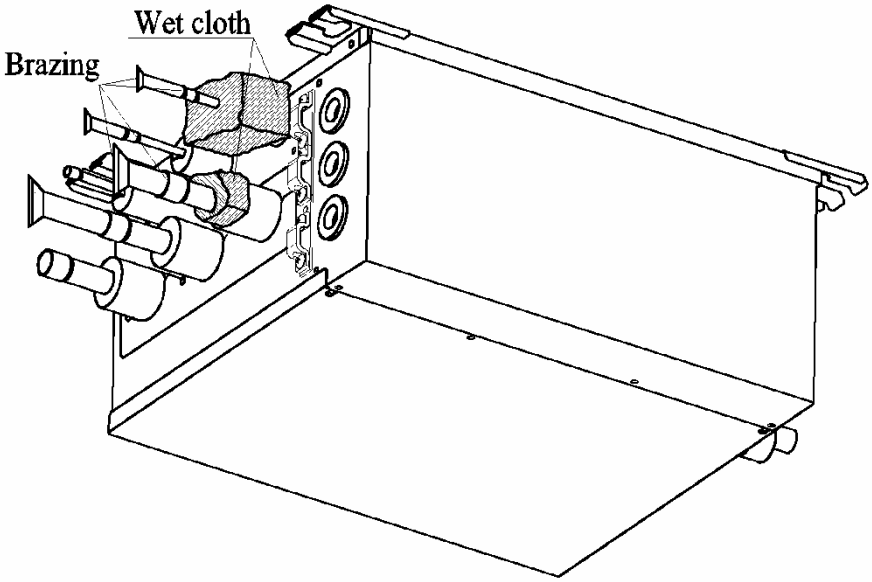

④ After brazing, use wet cloths to cool off the pipes to be brazed sufficient.

6.8 Precaution for Connection

1) Pipe connections should be follow the following rules:

① Outdoor unit shall be installed close to the indoor unit, hence to minimize the length and bends of connection pipes.

② The gap of outdoor unit and indoor units should be as small as possible

③ The bending diameter of the pipeline is better as large as possible.

2) The brazing operation must be strictly in accordance with the process requirements. During the installation, do not damage the pipeline and the bending diameter must be greater than 200mm.

3) The connection pipe cannot often be bent or straightened. Otherwise it will harden.

4) The elbow operation must use the elbow. Otherwise, the pipe may be cracking.

5) The process of flaring

① Using the tube cutter cutting the connecting pipe in the middle and remove the burrs.

② Install the nut before the flaring operation.

③ Check the flared portion, whether there is fractured or not.

6) The following table for the torque required to tighten the nuts.

Pipe diameter（mm）	Wall thickness（mm）	Tightening torque（N·m）
Φ6.35	≥0.5	15～30
Φ9.52	≥0.71	30～40
Φ12.7	≥1	45～50
Φ15.9	≥1	60～65
Φ19.05	≥1	70～75

7) Align the flared end of copper tube with the center of pipe joint. Tighten the nuts with hands.

8) Tighten the flaring nuts with torque wrench until you hear a “click”.

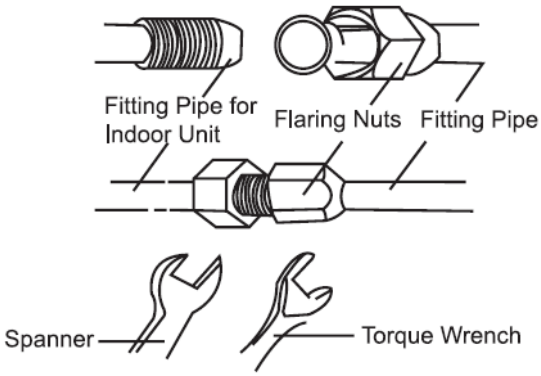

9) After all the refrigerant installation has been done, use nitrogen to carry out gas leak check.

Caution!

◆ During the connection of the indoor unit or BU module to the refrigerant pipe, never pull any joints of the indoor unit or the BU module by force; otherwise the capillary pipe or other pipe may crack, which then would result in leakage.

◆ The refrigerant pipe should be supported by brackets, that is, don’t let the unit withstand the weight of it.

◆ For the Super Free Match system, each pipe should be labeled to tell which system it belongs to avoid mistaken inaccurate piping.

6.9 Leak Test

1) Please make sure that the stop valves of the outdoor unit are closed during the operation.
2) The leak test should be made by pressurizing nitrogen gas.
3) Open the pressure reducing valve, pressurize the connection pipes to 1.0 MPa (10 bar) slowly, wait ten minutes, and make sure that the pressure will not drop.
4) Rise the pressure to 4.0 MPa (40 bar) slowly, wait 24 hours, and make sure the pressure will not drop.
5) If the pressure does not decrease, the pipes have passed the test. Otherwise, look for where the gas leaks from.

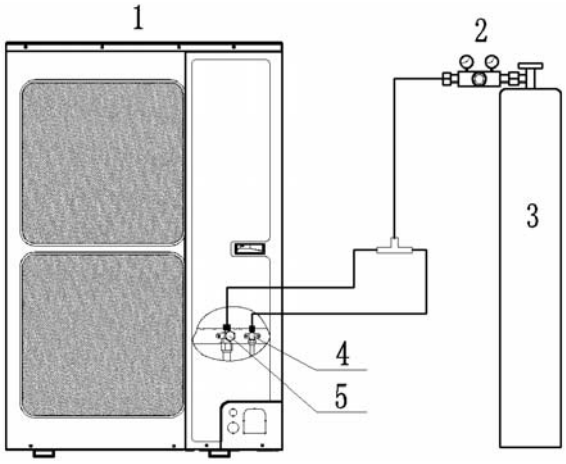

NO.	1	2	3	4	5
Name	Outdoor unit	Pressure reducing valve	Nitrogen	Liquid side stop valve	Gas side stop valve

6.10 Vacuum Operation

1) Make sure that the liquid and gas stop valve of the outdoor unit are closed fully during the operation.
2) As shown in the following figure, expel the gas from the refrigerant pipes by the vacuum pump.

1: Outdoor unit
2: Service port
3: Liquid side stop valve
4: Gas side stop valve
5: Pressure-vacuum gauge
6: Hi-knob
7: Lo-knob
8: Vacuum pump

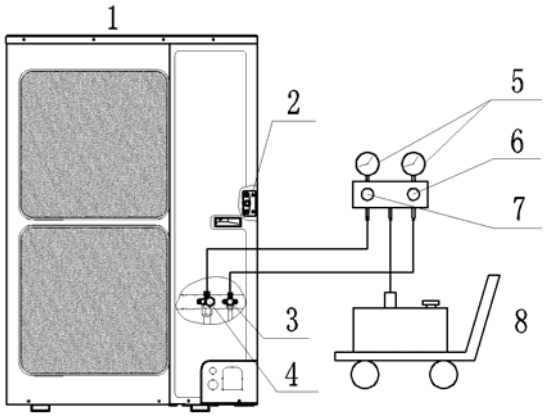

3) Open the pump and turn on the knobs to evacuate the gas in the liquid and gas pipes.
4) When the pressure of the system is less than −0.1Mpa (−1bar), keep the system for more than one hour under the condition.
5) Then turn off the knobs and the pump, and if the pressure of the pressure-vacuum gauge does not rise within 2 hours, the system is under a vacuum. Otherwise, the system has leaked, please look for where the gas leaks in.

6.11 Refrigerant Charging

6.11.1 The refrigerant has been charged into the outdoor unit before shipped from the manufacturer, while additional refrigerant still need be charged into the refrigerant pipe during the field installation.

6.11.2 Calculation of the Additional Refrigerant Charging

1) Get the refrigerant charge of the outdoor unit from the nameplate.

Note:

- ◆ The refrigerant charge of the outdoor unit does not include the charged additionally in the indoor unit, BU module and the refrigerant pipe.
- ◆ For the length of the connecting pipe is decided on the field, the amount of additional refrigerant shall be decided depending on the dimension and the length of the liquid pipe used on the field.
- ◆ Record the additional refrigerant charge for future maintenance.
- ◆ It does not need to add refrigerant if the total length of liquid pipe is within 30m.

2) Calculating the Mass of Additional Refrigerant

Additional Refrigerant Charge (kg) = Σ the Liquid Pipe Length of Φ6.35×0.022kg/m +Σ the Liquid Pipe Length of Φ9.52×0.054kg/m−1.47(kg)

- ◆ If the additional refrigerant charge is negative, it does not need to add the refrigerant.

3) Example: GWHD(56S)NK3CO

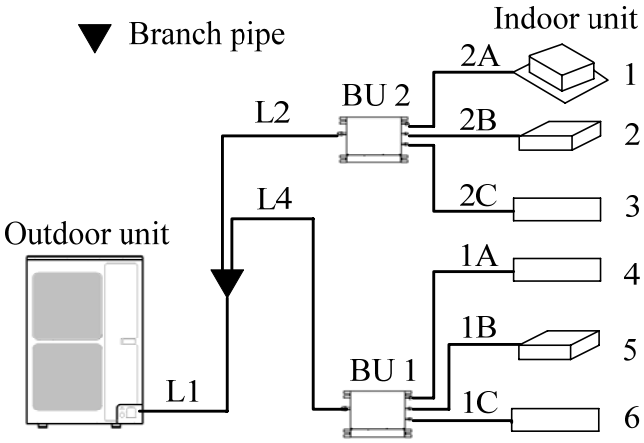

Serial No.	Model	
Indoor unit 1	Cassette type	GKH(12)BA-K3DNA2A/I
Indoor unit 2	Duct type	GFH(09)EA-K3DNA1A/I
Indoor unit 3	Wall mounted type	GWH(07)UA-K3DNA1B/I
Indoor unit 4	Wall mounted type	GWH(09)MA-K3DNA3E/I
Indoor unit 5	Duct type	GFH(09)EA-K3DNA1A/I
Indoor unit 6	Wall mounted type	GWH(09)KF-K3DNA6E/I

Serial No.	Diameter(mm)	Length(m)
L1	Φ9.52	20
L2	Φ9.52	10
L4	Φ9.52	10
1A	Φ6.35	5
1B	Φ6.35	5
1C	Φ6.35	5
2A	Φ6.35	5
2B	Φ6.35	5
2C	Φ6.35	5

The total length of the liquid pipes: 20+10+10+5+5+5+5+5+5=70(m).

Thus, the total length is over than 30m, so the air conditioner needs to add refrigerant.

◆ Additional refrigerant charge

Σ the Liquid Pipe Length of Φ6.35×0.022kg/m +Σ the Liquid Pipe Length of Φ9.52×0.054kg/m−1.47(kg)
=(5+5+5+5+5+5)(m)×0.022kg/m+(20+10+10)(m)×0.054kg/m−1.47(kg)
=1.35(kg)

4) Additional refrigerant charge record

Diameter(mm)	Total length(m)	Additional refrigerant charge(kg)
Φ6.35		
Φ9.52		
Total		

6.11.3 Procedures for adding refrigerant

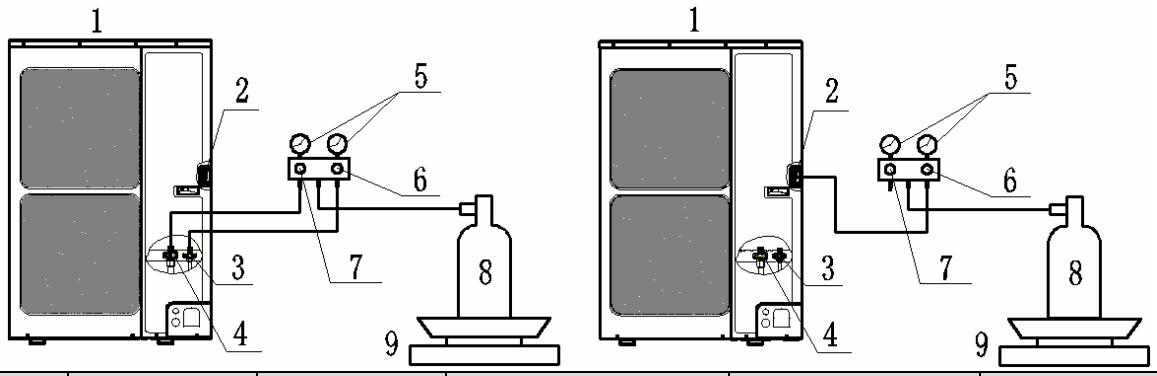

NO.	1	2	3	4	5
Name	Outdoor unit	Service port	Liquid side stop valve	Gas side stop valve	Pressure-vacuum gauge
NO.	6	7	8		9
Name	Hi-knob	Lo-knob	R410A tank		Scale

1) When the liquid and gas stop valves have not been opened, the system is under the vacuum:

① Refer to the left of the figure; connect the R410A tank to the system.

② Turn on the R410A tank and the Hi-knob; charge the R410A refrigerant into the system from the liquid side stop valve. The Lo-knob should be closed completely.

③ Turn off the R410A tank and the Hi-knob immediately, when the adding refrigerant is enough.

④ Turn on the liquid and gas side stop valves in an anticlockwise direction slowly and completely.

2) If the pressure of the system is too high to charge refrigerant, you can do as follow.

① Turn on the liquid and gas side stop valves in an anticlockwise direction slowly and completely.

② Turn on the power of the air conditioner, and set cooling mode, running more than 0.5h when outside temperature is higher than 18℃ DB.

a) Refer to the left of the figure; connect the R410A tank to the system.

b) Turn on the R410A tank and the Lo-knob, charge the R410A refrigerant into the system from the gas side stop valve. The Hi-knob should be closed completely.

c) Turn off the R410A tank and the Lo-knob immediately, when adding refrigerant is enough.

③ Turn on the power of the air conditioner, and set heating mode, running more than 0.5h when outside temperature is lower than 18℃ DB.

a) Refer to the right of the figure, connect the R410A tank to the system.

b) Turn on the R410A tank and the Hi-knob, charge the R410A refrigerant into the system from service port. The Lo-knob should be closed completely.

c) Turn off the R410A tank and the Hi-knob immediately, when adding refrigerant is enough.

Caution !

- Make sure the liquid and gas side stop valves are opened completely after the installation.
- Make sure exact refrigerant charge for the liquid pipe
- Additional refrigerant charge must be measured exactly.
- Make sure charging the liquid refrigerant into the system.
- Please prevent the refrigerant leakage from your body when removing charging hose.
- Please heat the refrigerant tank with hot water or hot air when the outside temperature is too low. However, it must be forbidden to heat with fire directly, otherwise it may lead to explosion.

7 Electrical Wiring Work

7.1 Wiring Connection

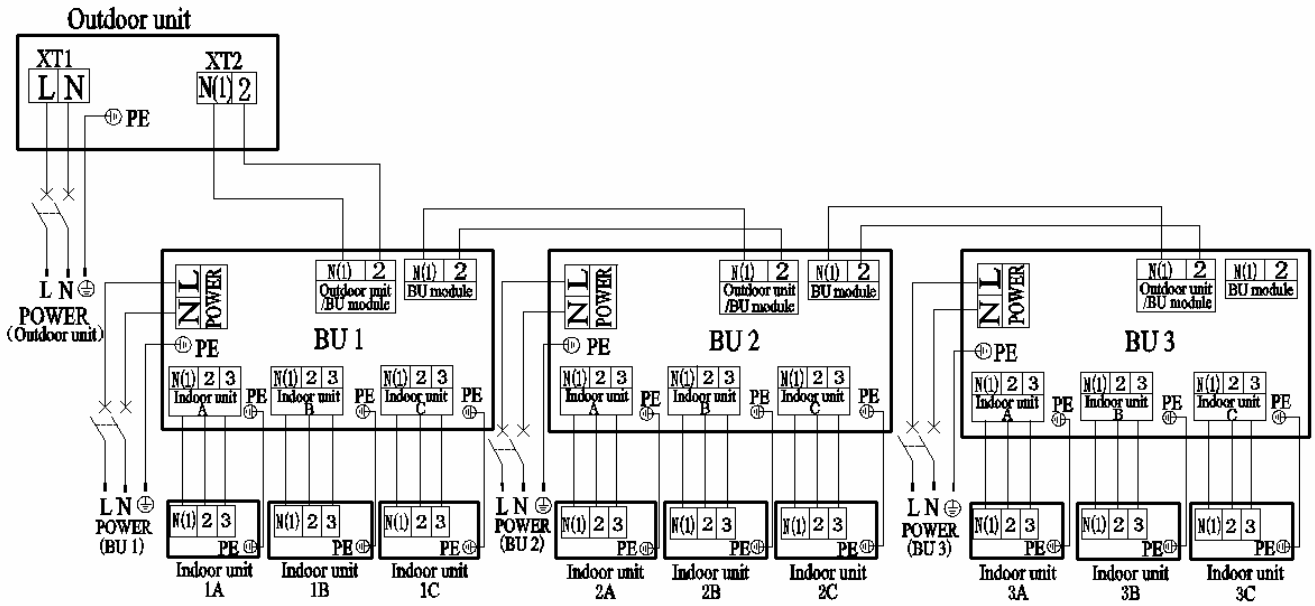

The “L”, “3” terminals are connected to the live wire, the “N”,”N(1)” terminals are connected to the neutral wire and the”2” terminal is connected to the transmission line.

7.2 Requirements of Power Circuit and Cable

Phase and frequency		1Ph,50Hz
Voltage		220～240V
Recommended cable of outdoor unit (Pieces × Sectional area)	GWHD(42S)NK3CO	3×6.0 mm^2
	GWHD(48S)NK3CO	
	GWHD(56S)NK3CO	
Recommended cable of BU module (Pieces × Sectional area)		3×0.75 mm^2
Transmission line (Pieces × Sectional area)		2×1.5 mm^2
Recommended cable of indoor unit (Pieces × Sectional area)		4×0.75mm^2
Capacity of the air switch	GWHD(42S)NK3CO	32A
	GWHD(48S)NK3CO	40A
	GWHD(56S)NK3CO	40A
	BU module	10A

Note:

- The total length of the transmission line between the outdoor unit and the furthest BU module is not more than 55m. Otherwise, the system cannot work possibility.
- The specifications of the power cable and transmission line listed in the table above are determined based on the maximum power (maximum amps) of the unit.
- The specifications of the power cable listed in the table above are applied to the conduit-guarded multi-wire copper cable (like, YJV copper cable, consisting of PE insulated wires and a PVC cable jacket) used at 40℃ and resistible to 90℃, and shall be at least those of ordinary polychloroprene sheathed cords (code designation 60245 IEC 57). If the working condition changes, they should be modified according to the related national standard.
- The specifications of the air switch listed in the table above are applied to the breaker with the working

temperature at 40℃. If the working condition changes, they should be modified according to the related national standard.

- The length of the recommended power cable should be less than 15 meters; otherwise, the diameter of the power cable is not enough.
- Mentioned power cable and transmission line length is just a reference value. It may be different depending on the condition of installation, humidity or materials, etc.
- An all-pole disconnection switch having a contact separation of at least 3mm in all poles should be connected in fixed wiring.

7.3 Ground Requirements

- The air conditioner is classified into the Class I appliances, so its ground ways must be reliable.
- The ground wire must be fixed on the screw hole with the sign as the right figure. ⏚
- The yellow-green wire of the air conditioner is the ground wire and must be fixed by the tapping screw. And it cannot be used for other purpose or cut off. Otherwise, it will cause the hazard of electric shock.
- The reliable ground terminal should be provided and the ground wire cannot be connected to any of the following places: a. Water pipe; b. Coal gas pipe; c. Sewage pipe; d. Lightning rod e. Telephone line f. Other unreliable places considered by a professional.

7.4 Precautions of Electrical Wiring Work

- The ground connection should be reliable and the ground wire should be connected to the dedicated device of the building by the professional.
- The electric installation should be carried out by the professional as instructed by the local laws, regulations and also this manual.
- The air switch coupled with the leakage current protection switch must be equipped in the circuits, which is of enough capacity and of both magnetic and thermal tripping functions in case of the short circuit and overload.
- The power supply of the outdoor unit and all the BU modules should be separately.
- The electrical work should use a cable length enough to cover the entire distance with no connection. If it is unavoidable, please make sure the connection should be reliable and the external forces will not act on the wires. Otherwise it will cause electrical shock or fire etc.
- The power cable with the rated voltage and exclusive circuit for the air conditioning should be used.
- Do not pull the power cable by force.
- The diameter of the power cable should be large enough and once it is damaged, it must be replaced by the dedicated one.

7.5 Precaution of Laying Wires

1) Use a wire stripper to strip off about 25mm of the insulation layer at the end of the wires;
2) Loosen the screws on the terminal block of the air conditioner;
3) Use the pliers to bend the end of the wire into a ring shape corresponding the size of the screw;
4) Pass the screw through the wire ring and fix it onto the terminal block.

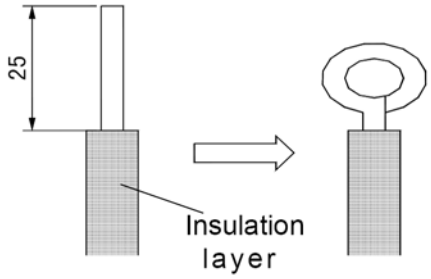

7.6 Electrical Wiring Work for Outdoor Unit

1) Knock the holes in the plate of the chosen direction with the hammer.
2) Place the rubber ring on the knockout hole.
3) Let the power cable and transmission line go through the knockout hole.
4) Connect the power cable of the outdoor unit to the L, N terminals with the sign of the XT1 and as well as the ground screw.
5) Connect the transmission line of the outdoor unit to the N(1), 2 terminals with the sign of the XT2.
6) Fix the power cable and transmission line firmly by cable fixing clip.
7) Screw the coping plate, front side plate, right connection board, front connection board back.
8) Cover the through-holes with sealing materials to prevent the water, dust or small animals going into the outdoor unit.

Caution!

- The transmission line and the power cable must be separated and separated with an interval of at least 2cm; otherwise it may be result in communication problem.
- In order to protect the power cable and transmission line from damaging by the hole, the rubber ring must be placed on the hole. Otherwise, it may cause electrical shock or fire etc.
- The power wire and transmission line must be more than one meter away from televisions or radios which can emit electromagnetic waves to prevent image interference or noise. Otherwise, the unit maybe cannot work.
- Confirm the each cable connected to the terminal screw is exactly and securely after finishing the electric work.
- Fix each ground wire separately with the ground screw.
- If the connecting wire is connected to the terminal incorrectly, the unit will not work normally.

7.7 Electrical Wiring Work for BU Module

1) Unscrew the electrical equipment plate.
2) The structure of behind the electrical equipment plate.

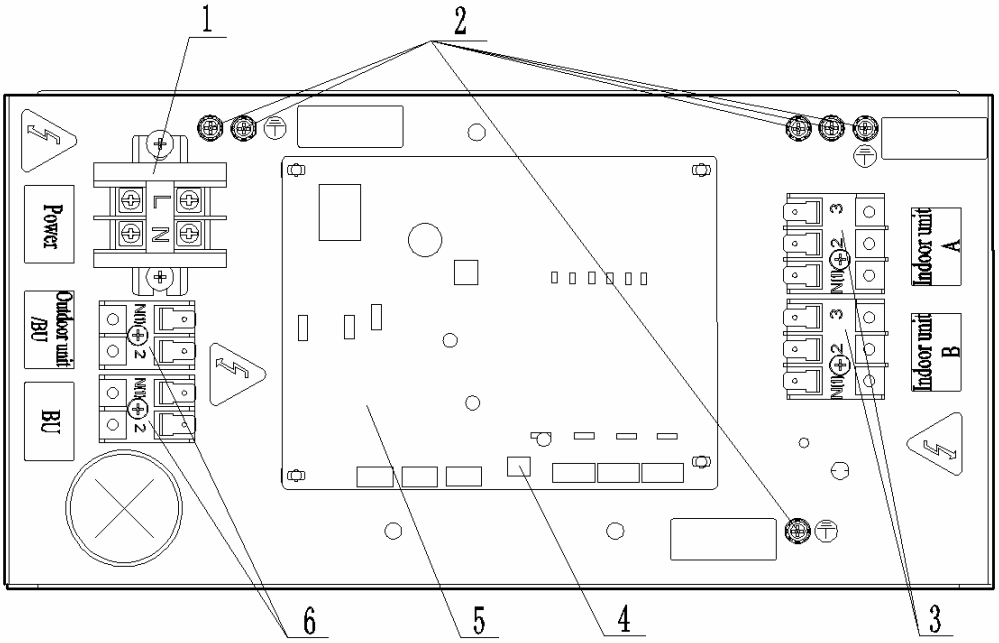

a) FXA2A-K and FXA2B-K

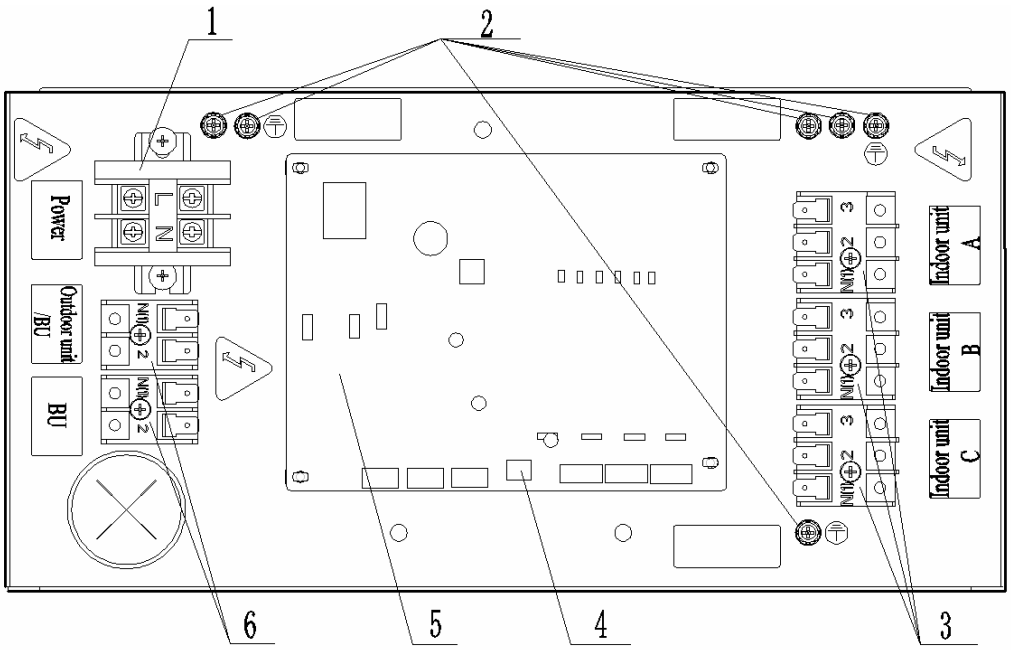

b) FXA3A-K and FXA3B-K

NO.	1	2	3
Name	Terminal black for BU module power supply	Ground screw	Terminal black for indoor unit power supply
NO.	4	5	6
Name	DIP switch	Printed circuit board	Terminal black for transmission line

3) Let the power cable and transmission line go through the rubber ring. In order to protect the power cable and transmission line from damaging by the hole, the rubber ring cannot fall from that, otherwise, it may cause electrical shock or fire etc.
4) Connect the power cable of the BU module to the L, N terminals with the sign of Power and as well as the ground screw.
5) Connect the transmission line of the BU module to the N(1), 2 terminals with the sign of Outdoor unit/BU.
6) If the transmission line need to be connected to the other BU module, please connect the extra line to the N(1), 2 terminals with the sign of BU.
7) Connect the power cable of the indoor unit to the N(1), 2 and 3 terminals with the sign of Indoor unit A (B and C) and as well as the ground screw.
8) Fix the power cable and transmission line firmly by cable fixing clip.
9) Screw the electrical equipment plate.

Caution!

- The transmission line and the power cable must be separated and separated with an interval of at least 2cm; otherwise it may be result in communication problem.
- Confirm the each cable connected to the terminal screw is exactly and securely after finishing the electric work.
- Fix each ground wire separately with the ground screw.
- When connecting indoor units, make sure to connect refrigerant pipes and power cables to the same connection ports marked with matching signs (A, B and C).
- If the connecting wire is connected to the terminal incorrectly, the unit will not work normally.

10) Instructions for DIP Switch

- 2 digits DIP is adopted to assign the address when using multi-BU modules and the address cannot be repeated in the same unit.
- One outdoor unit can connect to no more than 3 BU modules.
- “ON” side means "1" and number represents "0" (Note: The black part is lever.)

Number	DIP Code		Icon	Address
	DIP 1	DIP 2		
1	0	0	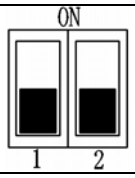	BU 1
2	0	1	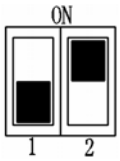	BU 2
3	1	0	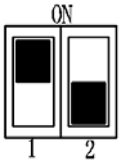	BU 3

7.8 Electrical Wiring Work for Indoor Unit

1) Open surface panel.
2) Remove the electrical box cover.
3) Route the power connection cord from the back of the indoor unit and pull it toward the front through the wiring hole upward.
4) Connect the wiring (communication) through the piping hole of the chassis and the bottom of the appliance upward, then connect the brown wire to the Terminal board “3”;black wire(the communication wire) to the Terminal board“2”;blue wire to the Terminal board “N(1)”,and connect the ground wire to the screw terminal on the electric box. Clamp them with the corresponding wire clamp packed in the chassis.
5) Reassemble the electrical box cover.
6) Recover the surface panel.
7) The temperature of refrigerant circuit will be high, please keep the interconnection cable away from the copper tube.

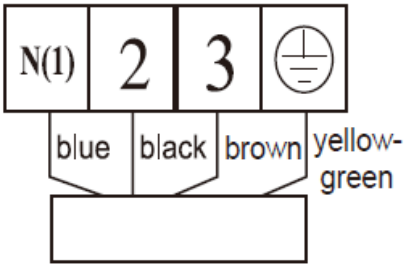

8 INSTALLATION OF DRAINAGE PIPELINE

8.1 Material Quality Requirements for Condensate Pipe

Generally, the condensate pipe shall be water supply U-PVC pipe, adhered by using special glue. The other materials available include: PP-R pipe, PP-C pipe and hot-dipped galvanized steel pipe. It is not allowed to use aluminum plastic composite pipe.

8.2 Key Points for Condensate Pipe Installation

1) Work Order

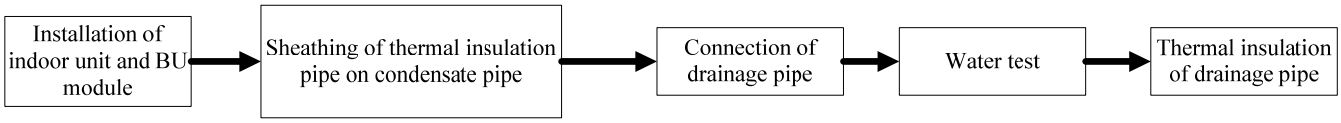

2) Determine the direction and elevation of condensate pipe before installation. To ensure the gradient smooth and straight, avoid intersecting with other pipelines. The height of the clamp fixing the pipe hanger frame shall be adjustable and fixed from the outer of thermal insulation.
3) The gradient of condensate pipe shall be over 1% and the gradient of main pipe shall not be less than 0.3%, while there shall be no overhanging slope.

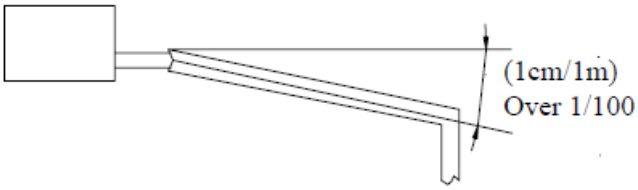

4) When connecting the 3-way section of condensate pipe, the 2-way straight section on 3-way pipe shall be on the same gradient. The two ends of 2-way section shall not have different gradient. See the schematics below:

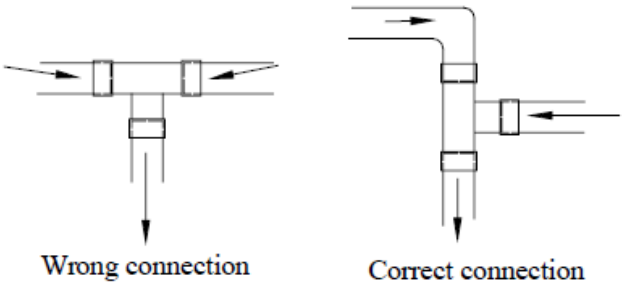

5) Confluence toward the horizontal pipe shall be best from the upper. Back flow is easy to occur if from the lengthwise direction.

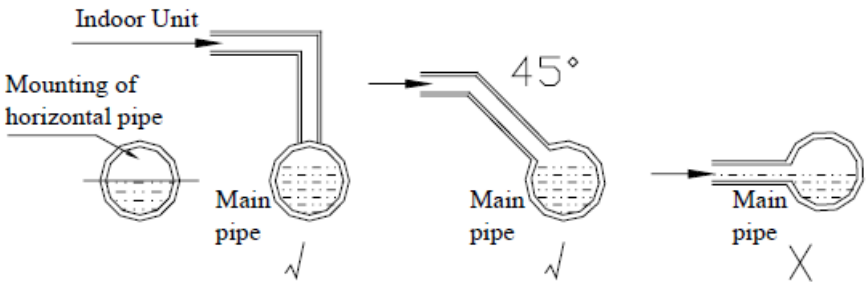

6) Do not tie the condensate pipe and refrigerant pipe together.
7) To ensure smooth drainage of condensate, a vent hole shall be set at the highest point of drainage pipe.
8) Carry out water flow test and full water test after the pipe connection is completed. On one hand, check

if the drainage is smooth; on another hand, check the piping system for any leakage.

9) Steel sheath shall be provided to the pipe crossing the wall or slab. The pipe joint shall not be positioned within the sheath. The steel sheath shall be flush with the wall surface or slab base, but 20mm higher than the slab base. The sheath shall not affect the pipe gradient. The clearance between pipe and sheath shall be blocked by using flexible inflammable materials. The sheath shall not be used as the supporting point of the pipe.

10) The joint of thermal insulation materials must be adhered by using special glue and then wrapped with plastic tape having a width not less than 5cm to avoid condensing.

11) Ensure a gradient over 1% when connecting the drainage pipe to the indoor unit.

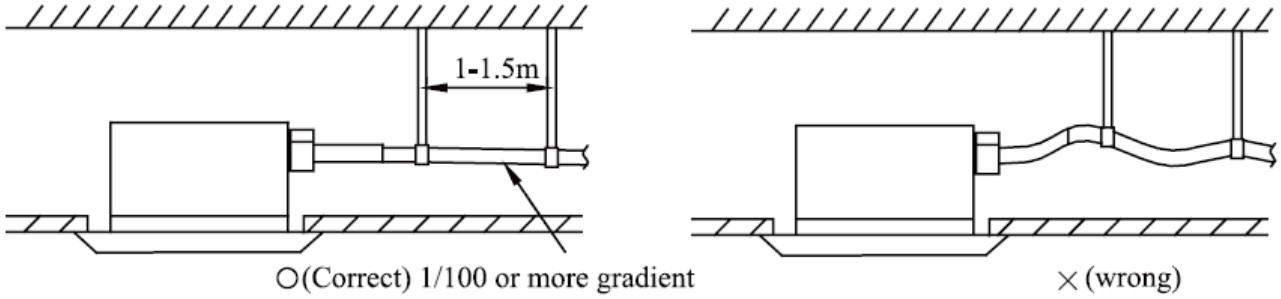

12) When connecting the drainage pipe to the indoor unit, please fix with the included pipe clamp and do not use glue water, thus to ensure easy repair.

13) Installation requirements for auxiliary drainage pipe

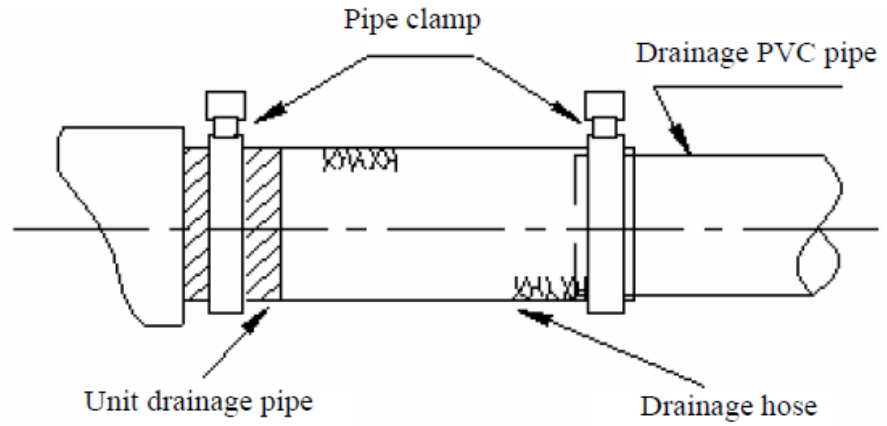

The auxiliary drainage pipe must be thermally insulated:

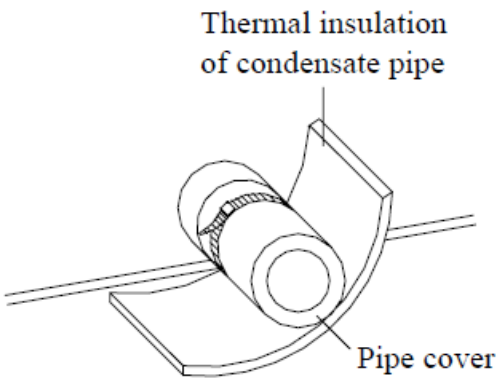

14) The long drainage pipe may be fixed by using hanger bolts, thus to ensure a gradient of 1/100 (PVC cannot be bent).

The spacing between the supports of horizontal pipe is 0.8-1.0m. Twisting will be caused and thus air bag will be formed if the spacing is too high. Once the air bag is formed, the pump can only compress the air bag no

matter how forcible it pushes, but there is no flowing water, thus resulting in abnormal water level. This will cause flooding of the ceiling.

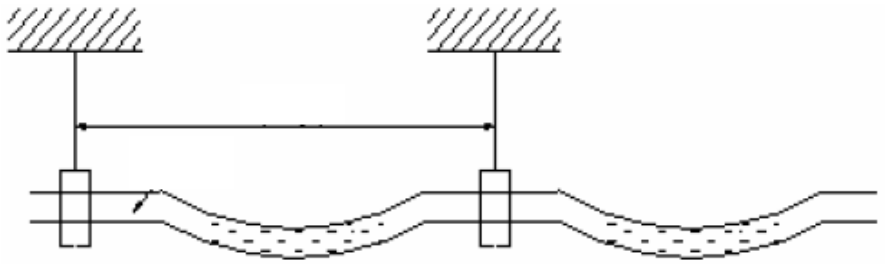

15) If the air flow of indoor unit is high, this might cause negative pressure and result in return suction of outdoor air. Therefore, U-type water trap shall be designed on the drainage side of each indoor unit.

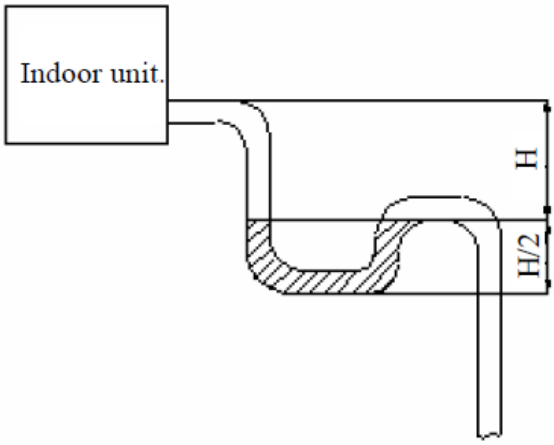

- Install water trap as shown below;
- Install one water trap for each unit.
- Installation of water trap shall consider easy cleaning in the future.

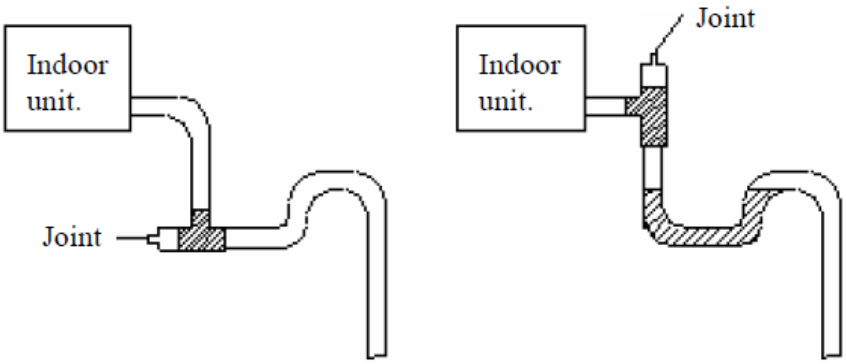

16) Connection of drainage branch pipe to the standpipe or horizontal pipe of drainage main pipe.

The horizontal pipe cannot be connected to the vertical pipe at a same height. It can be connected in a manner as shown below:

- NO1: 3-way connection of drainage pipe joint

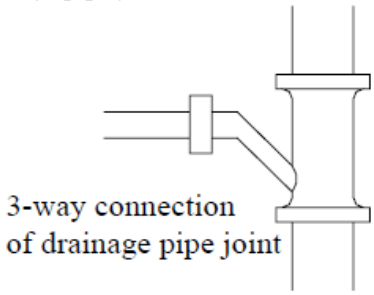

◆ NO2: Connection of drain elbow

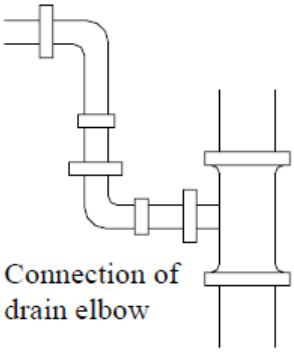

◆ NO3: Connection of horizontal pipe

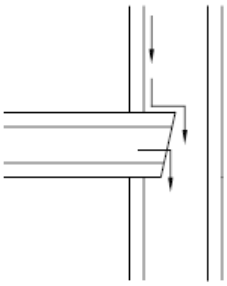

Connection of horizontal pipe

Drainage pipe is requisite for air conditioner unit. During cooling, the moisture in the air will condense on the surface of evaporator. Such condensing water must be drained out of the unit. Meanwhile, the drainage pipe has an important role to determine if the air conditioner can plays its full functions.

17) All the condensate pipes must be installed at a distance over 500mm from the electric box of the unit.

9 Installation of Protective Layer on Connection Pipe

1) The refrigerant pipes should be insulated by the insulating material and plastic tape in order to prevent water condensation and leakage.
2) Do not use the foam on the branch pipe as the material for heat insulation.
3) The joints of the system should be wrapped with the insulating material and no gap is allowed on the joint of the system.

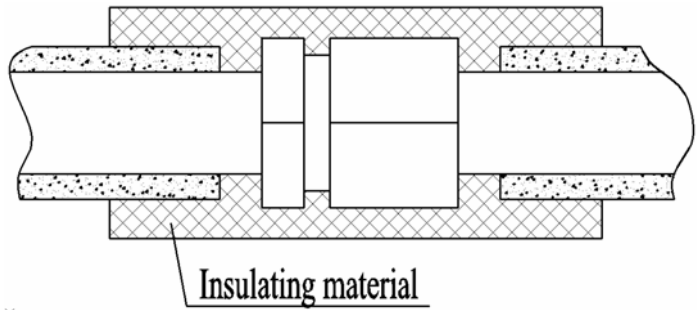

4) Bundle the refrigerant pipe and transmission line together with tape, and separate them from the drain pipe to prevent the condensate water overflowing.
5) Wrap the pipe from the bottom of the outdoor unit to the top of the pipe where it enters the wall. During the wrapping, the later circle should cover half of the former one.
6) At intervals of about 1 meter, fix the refrigerant pipes to the wall with brackets, that is, don't let the unit withstand the weight of it or float it in the air.

Caution!

- After the pipe is protected well enough, never bend it to form a small angle(＜90°), otherwise it would crack or break.
- Do not wrap the refrigerant pipes very tight, otherwise the insulation effect would be weakened. Additionally, make sure the drain hose is separated from the refrigerant pipes.
- After that, cover the hole on the wall with sealing materials to prevent wind and noise going into the room.

MAINTENANCE

MAINTENANCE

1 Testing Board Introduction

The testing board is in the front of electrical box and can be observed well. It has several following advantages:

- Automatically detect indoor unit numbers
- Automatically assign indoor unit addresses
- Automatically display real running function and error code
- Option settings to suit the demand of the customer

1.1 Compose of Testing Board

The testing board is composed of the function section, data section and button section.

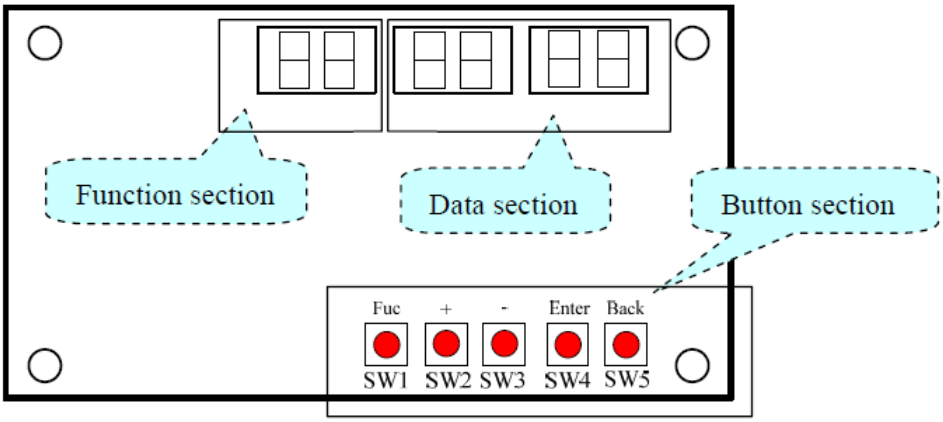

1.2 Instruction of Function and Data Section

<table>
<tr><th>Running state</th><th>The display of function section</th><th>The display of data section</th></tr>
<tr><td>Stop</td><td>① The section will display the numbers of the indoor units which have established communication with the outdoor unit. For example, if there are seven established indoor units, the section will display “7”.
② It will display the address of the indoor units by turns. For example, the “1b” is represented of the indoor unit 1B.（BU module:1/2/3，Indoor unit: A/B/C）</td><td>① If the function section displays the numbers of the indoor units, the data section will display the outside temperature. For example, the “35” is represented of 35℃.
② If the function section displays the address of the indoor unit，the data section will display the capacity of the indoor unit, for example, the “35” is represented of 3500W.</td></tr>
<tr><td>Normal</td><td>The code of running state:
<table>
<tr><th>Code</th><th>Running state</th><th>Code</th><th>Running state</th></tr>
<tr><td>UE</td><td>Pressure equalization</td><td>UH</td><td>Heating</td></tr>
<tr><td>UP</td><td>Pump down</td><td>F7</td><td>Oil returning</td></tr>
<tr><td>UC</td><td>Cooling</td><td>H1</td><td>Defrosting</td></tr>
</table></td><td>It displays the target gear of the compressor. If the gear is zero, it will display “0”. For example, the gear is the fifteenth; it will display “15”. The range of the gear is from 0 to 60.</td></tr>
</table>

Malfunction	If the malfunction occurs in the system, the section will display the error code. If there are several malfunctions, it will display the error codes by turns at intervals of 2 seconds.	① If the malfunction occurs in the outdoor unit, the section displays nothing; ② If the malfunction occurs in the indoor units, the section displays the address of the indoor unit.

1.3 Process Control Setting

1.3.1 Button section

Key	Fuc	+	−	Enter	Back
Signification	Function	Increase	Decrease	Enter	Back

Caution!

① When entering the menu to set parameters, the function section will flash running codes and the data section will flash value.

② When the menu is set, the data section will flash "=". After the "=" stops blinking, the unit will run the new parameters.

1.3.2 Flow chart of operation

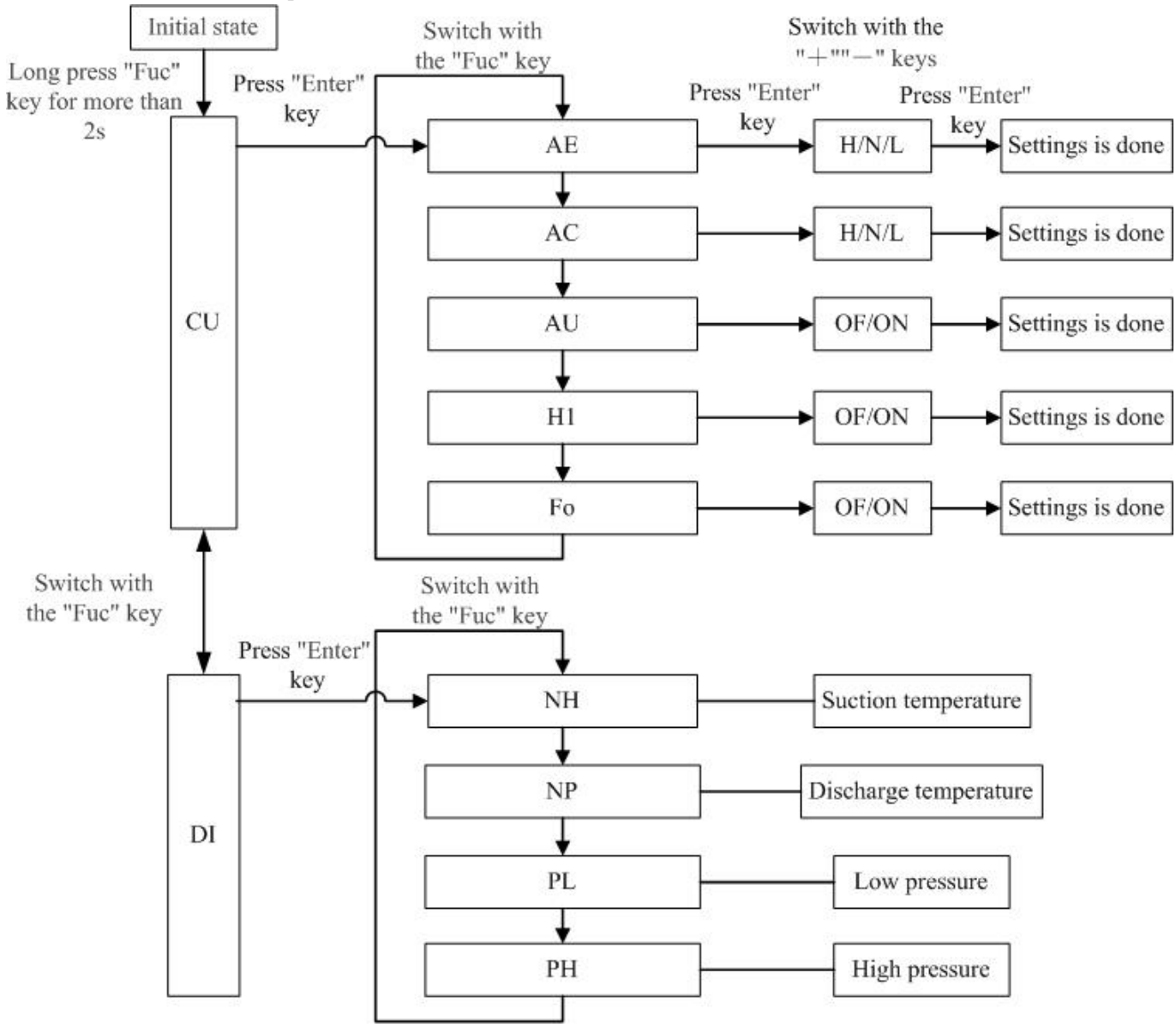

Note:

① Long press “Fuc” key for more than 2s to enter the first-level menu. The first-level menu includes control unit and display unit.

◆ Press “Enter” key to enter the second-level menu.

◆ Press “Fuc” key to switch the menu.

◆ Press “Back” key to the previous menu.

② Control unit operation:

◆ **When entering into the control unit:**

The function section flashes the running code and the data section display the current value uninterrupted.

◆ **Set parameters:**

Press “Enter” key to enter the second-level menu, and set parameters with the “＋” “－” keys. Now the function section displays the running code uninterrupted and the data section flashes the set parameters.

◆ **Finish setting:**

After press “Enter” key to the end, the function section will display the running code uninterrupted and the data section display the set parameters uninterrupted.

◆ **Back:**

Press “Back” key to the previous menu, and long press the “Back” key to exit the operation.

③ Display unit operation:

◆ **When entering into the display unit:**

The function section display running code uninterrupted and the data section display the current value uninterrupted.

◆ “＋” “－”**Keys are invalid in the operation.**

④ If no operation is performed within 1min, it will automatically return to the normal display.

1.3.3 For example

Set condensation temperature

① Long press “Fuc” key for more than 2s to enter the first-level menu: the function section flashes “CU” code and the data section is blank.

② Press “Enter” key to enter the second-level menu: the function section flashes “AE” code and the data section display the current parameters.

③ Switch with the “Fuc” key to set condensation temperature: the function section flashes “AC” code and the data section display the current parameters.

④ Press “Enter” key: the function section display “AC” code uninterrupted and the data section flashes the current parameters.

⑤ Switch with the “＋” “－” to the target value, and then press “Enter” key: the function section display “AC” code uninterrupted and the data section flashes the new parameters uninterrupted.

1.3.4 The meaning of running code

Sorts	Function section	Data section	Remarks
Control Unit	**CU**	**Blank**	
Set evaporation temperature	AE	Default: N	Use the "＋" "－" keys to switch L, N and H. ◆ If you want to get a higher cooling capacity, select L; else select H.
Set condensation temperature	AC	Default: N	Use the "＋" "－" keys to switch L, N and H. ◆ If you want to get a higher heating capacity, select H; else select L.
Vacuum operation	AU	The current parameter	Use the "＋" "－" keys to switch ON, OF. ◆ ON represents that the unit is running the current state. ◆ OF represents that the unit isnot running the current state.
Set defrosting mode	H1	The current parameter	
Set refrigerant recovery mode	Fo	The current parameter	
Display Unit	**DI**	**Blank**	
Display suction temperature	PU	Suction temperature. For example, 15 represents 15℃	"＋" "－"Keys are invalid in the operation.
Display discharge temperature	PC	Discharge temperature. For example, 70 represents 70℃	
Display low pressure	PL	Low pressure. For example, 95 represents 0.95Mpa	
Display high pressure	PH	High pressure. For example, 280 represents 2.8Mpa	

1.3.5 The code of data section

Set evaporation temperature	H(represent High)	N(represent Normal)	L(represent Low)
Set condensation temperature			
Vacuum operation	OF(represent OFF)	ON	/
Set defrosting mode	OF(represent OFF)	ON	/
Set defrosting mode	OF(represent OFF)	ON	/

2 Troubleshooting

Warning!

a. In the event of abnormal conditions (like, stinky smell), please shut off the main power supply immediately and then contact the GREE appointed service center; otherwise the continuous abnormal running would damage the air conditioning unit and also would cause electric shock or fire hazard etc.

b. Do not repair the air conditioner personally but instead contact the professionally skilled personnel at the GREE appointed service center, as the incorrect repair would cause electric shock or fire hazard etc.

2.1 Check before Contacting Maintenance Serviceman

Please check the following items before contacting the maintenance serviceman.

Conditions	Causes	Corrective actions
The unit does not run at all	Broken fuse or breaker is off	Replace the damaged fuse or close the breaker
	Power off	Restart the unit after power supply resumes
	Power supply plug is loose	Plug the power supply properly
	The batteries voltage of the remote controller is insufficient	Replace with new batteries
	Remote controller is out of the control scope	The distance shall be within 8m
The unit stops soon after it starts	Air inlet or outlet of indoor unit or outdoor unit is blocked	Remove the obstacles
Cooling or heating is abnormal	Air inlet or outlet of indoor unit or outdoor unit is blocked	Remove the obstacles
	Temperature setting is improper	Adjust the setting of remote controller or wire controller
	Air speed is set too low	Adjust the setting of remote controller or wire controller
	Improper airflow direction	Adjust the setting of remote controller or wire controller
	Door or window is open	Close the door or window
	Under direct sunshine	Hang curtain or blinders over the window
	Too many people in the room	
	Too many heat sources indoors	Reduce the heat sources
	The filter screen is dirt or blocked	Clean the filter screen

Note:

If the air conditioner still runs abnormally after the above check and handling, please contact the local appointed service center and also give a description of the error occurred as well as the model of the unit.

2.2 Problem Handling

The conditions listed below are not classified into errors.

Conditions		Causes
The unit does not run	When restart the unit soon after it is stopped	The overload protection switch of the unit let the startup delayed for three minutes
	As soon as power supply is on	The unit will stand by for approximate one minute
The unit blows out mist	When the cooling operation starts	The hi-humidity air indoor is cooled quickly
The unit generates noise	The unit “clatters” as soon as it starts running	It is the sound generated during the initialization of the electronic expansion valve
	The unit “swishes” during the cooling operation	It is the sound when the refrigerant gas runs inside the unit
	The unit “swishes” when it is started or stopped	It is the sound when the refrigerant gas stops running
	The unit “swishes” when it is in and after the running	It is the sound when the draining system is operating
	The unit “squeaks” when it is in and after the running	It is the sound of frication generated by the skin plate etc which swells due to the temperature change
The unit blows out dust	When the unit restarts after it is not used for a long time	The dust inside the unit is blown out again
The unit emits odors	When the unit is running	The odors absorbed in are blown out

2.3 Error description

◆ Outdoor unit

If some error occurs when the unit is running, the error code will be displayed on the wired controller, the testing board of the outdoor unit. Check for more details about the meaning of each error.

Errors of definition	Main control display for outdoor unit			Indoor unit code	Testing board code
	Yellow LED	Red LED	Green LED		
The compressor is startup	Flash 1 time				
IPM current protection	Flash 3 times			H5	H5
IPM temperature protection	Flash 5 times			P8	P8
PFC current protection	Flash 7 times			HC	HC
PFC temperature protection	Flash 8 times			P8	P8
Low voltage protection	Flash 9 times			PL	PL
High voltage protection	Flash 10 times			PH	PH
Low pressure protection	Flash 11 times			E3	E3
High pressure protection	Flash 12 times			E8	E8
High pressure switch protection	Flash 13 times			E1	E1
Capacitor charging error	Flash 14 times			PU	PU
Current protection	Flash 15 times			E5	E5
Memory card error	Flash 16 times			EE	EE
Compressor demagnetizing protection	Flash 17 times			HE	HE
Compressor desynchronizing	Flash 18 times			H7	H7
Compressor phase lack	Flash 19 times			U2	U2
Compressor phase circuit detection error	Flash 20 times			U1	U1
Compressor current protection	Flash 21 times			L9	L9
Compressor overload protection	Flash 22 times			H3	H3

Compressor discharge temperature protection	Flash 23 times			E4	E4
Lack of refrigerant or jam protection	Flash 31 times			F0	F0
Normal operation		Flash 1 time			
Frequency limitation for current protection		Flash 2 times			F8
Oil returning mode		Flash 3 times		F7	F7
Defrosting mode		Flash 4 times		H1	H1
Frequency limitation for IPM temperature protection		Flash 5 times		EU	EU
Frequency limitation for PFC temperature protection		Flash 6 times		EU	EU
Frequency limitation for compressor overload protection		Flash 8 times			LU
Frequency limitation for discharge temp. protection		Flash 9 times			F9
Frequency limitation for low pressure protection		Flash 10 times			Pn
Frequency limitation for high pressure protection		Flash 11 times		F6	F6
Discharge temperature sensor error		Flash 12 times		F5	F5
Outside temperature sensor error		Flash 13 times		F3	F3
Suction temperature sensor error		Flash 15 times			dc
Condenser temperature sensor error		Flash 16 times		A7	A7
Sub-cool temperature sensor error		Flash 17 times			bC
Low pressure sensor error		Flash 18 times			dL
High pressure sensor error		Flash 19 times			e1
Fan motor protection		Flash 20 times		H6	H6
Driving board is connected			Flash 1 time		
Testing board is connected			Flash 2 times		
Computer is connected			Flash 4 times		
Indoor unit 1 is connected			Flash 5 times		
Indoor unit 2 is connected			Flash 6 times		
Indoor unit 3 is connected			Flash 7 times		
Indoor unit 4 is connected			Flash 8 times		
Indoor unit 5 is connected			Flash 9 times		
Indoor unit 6 is connected			Flash 10 times		
Indoor unit 7 is connected			Flash 11 times		
Indoor unit 8 is connected			Flash 12 times		
Indoor unit 9 is connected			Flash 13 times		
Indoor anti-freeze protection				E2	E2
Inside temperature sensor error				F1	F1
Evaporator midway temp sensor error				F2	F2
Liquid pipe of BU module temperature sensor error				b5	b5
Gas pipe of BU module temperature sensor				b7	b7

error							
Mode conflicts						E7	E7
Communication error	BU 1	Indoor unit A				E6	E6 1A
		Indoor unit B					E6 1B
		Indoor unit C					E6 1C
	BU 2	Indoor unit A					E6 2A
		Indoor unit B					E6 2B
		Indoor unit C					E6 2C
	BU 3	Indoor unit A					E6 3A
		Indoor unit B					E6 3B
		Indoor unit C					E6 3C
Communication error between the main board and driving board							P6
Communication error between the main board and testing board							CE
Indoor unit gas sensor error							Fn
Indoor unit humidity sensor error							L1
Indoor unit water full protection							E9
Jumper terminal error						C5	C5
Power supply phase lack							dJ
Outdoor unit fan motor error							L3
Refrigerant recovery mode						Fo	Fo

◆ BU module

Errors	Indicating LED flashing times			Indoor unit error code	Outdoor unit error code
	Yellow LED	Green LED	Red LED		
BU 1 is connected	Flash 1 time				
BU 2 is connected	Flash 2 times				
BU 3 is connected	Flash 3 times				
Indoor unit A is connected		Flash 1 time			
Indoor unit B is connected		Flash 2 times			
Indoor unit C is connected		Flash 3 times			
Indoor unit A gas tube temperature sensor error			Flash 1 time	b7	b7+ indoor unit address
Indoor unit A liquid tube temperature sensor error			Flash 2 times	b5	b5+ indoor unit address
Indoor unit B gas tube temperature sensor error			Flash 3 times	b7	b7+ indoor unit address
Indoor unit B liquid tube temperature sensor error			Flash 4 times	b5	b5+ indoor unit address
Indoor unit C gas tube temperature sensor error			Flash 5 times	b7	b7+ indoor unit address
Indoor unit C liquid tube temperature sensor error			Flash 6 times	b5	b5+ indoor unit address

3 FLOW CHART OF TROUBLESHOOTING

Service personnel shall collect the malfunction information as much as possible and research them thoroughly, list these electrical parts which may cause malfunction, service personnel shall be able to determine the specific reason and solve the faulted parts.

Observe the status of the complete device and do not observe the partial.

It is advised to start from the simple operation during analyzing, judging and confirming malfunction reason, then conduct the complicated operations such removal of device, part replacement and refrigerant filling.

Find the malfunction reason carefully as unit may occur several malfunction at the same time and one malfunction may develop into several malfunction, so entire system analysis shall be established to make the judged result exact and credible.

3.1 Malfunction display: High Pressure Protection

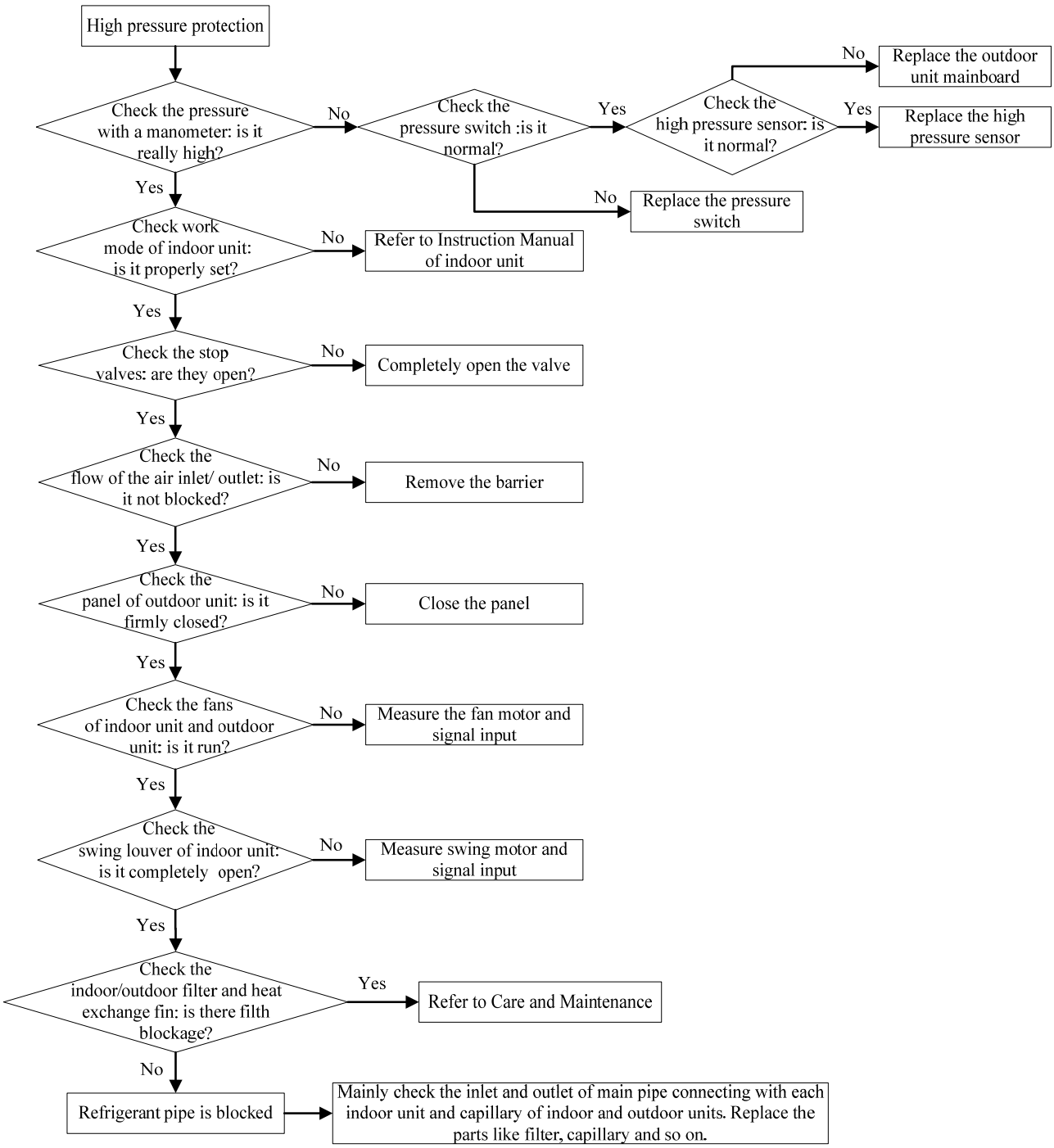

3.2 Malfunction display: Low Pressure Protection

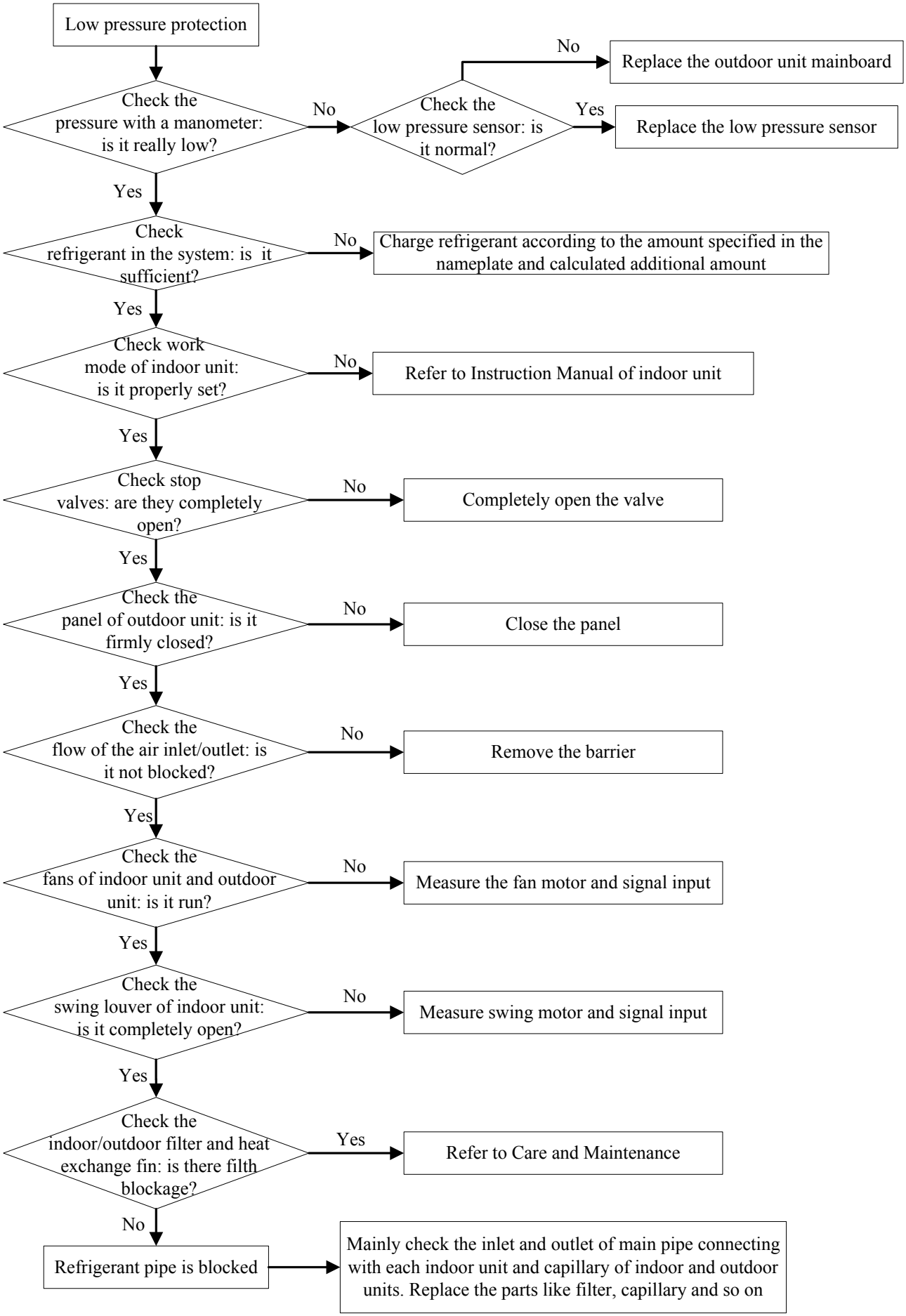
Low pressure protection
Check the pressure with a manometer: is it really low?
No
Check the low pressure sensor: is it normal?
No
Replace the outdoor unit mainboard
Yes
Replace the low pressure sensor
Yes
Check refrigerant in the system: is it sufficient?
No
Charge refrigerant according to the amount specified in the nameplate and calculated additional amount
Yes
Check work mode of indoor unit: is it properly set?
No
Refer to Instruction Manual of indoor unit
Yes
Check stop valves: are they completely open?
No
Completely open the valve
Yes
Check the panel of outdoor unit: is it firmly closed?
No
Close the panel
Yes
Check the flow of the air inlet/outlet: is it not blocked?
No
Remove the barrier
Yes
Check the fans of indoor unit and outdoor unit: is it run?
No
Measure the fan motor and signal input
Yes
Check the swing louver of indoor unit: is it completely open?
No
Measure swing motor and signal input
Yes
Check the indoor/outdoor filter and heat exchange fin: is there filth blockage?
Yes
Refer to Care and Maintenance
No
Refrigerant pipe is blocked
Mainly check the inlet and outlet of main pipe connecting with each indoor unit and capillary of indoor and outdoor units. Replace the parts like filter, capillary and so on

3.3 Malfunction display: Discharge temperature protection

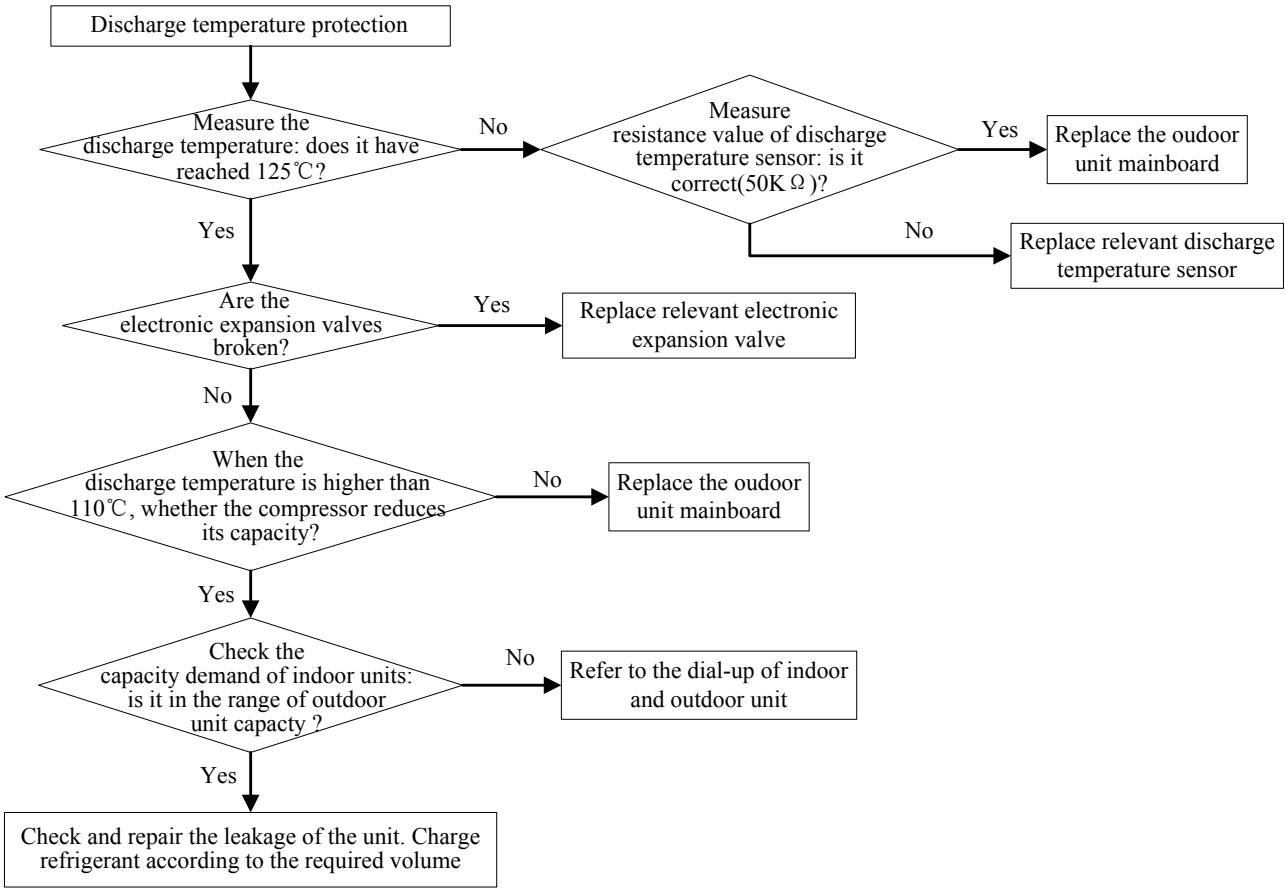

3.4 Malfunction display: Current protection

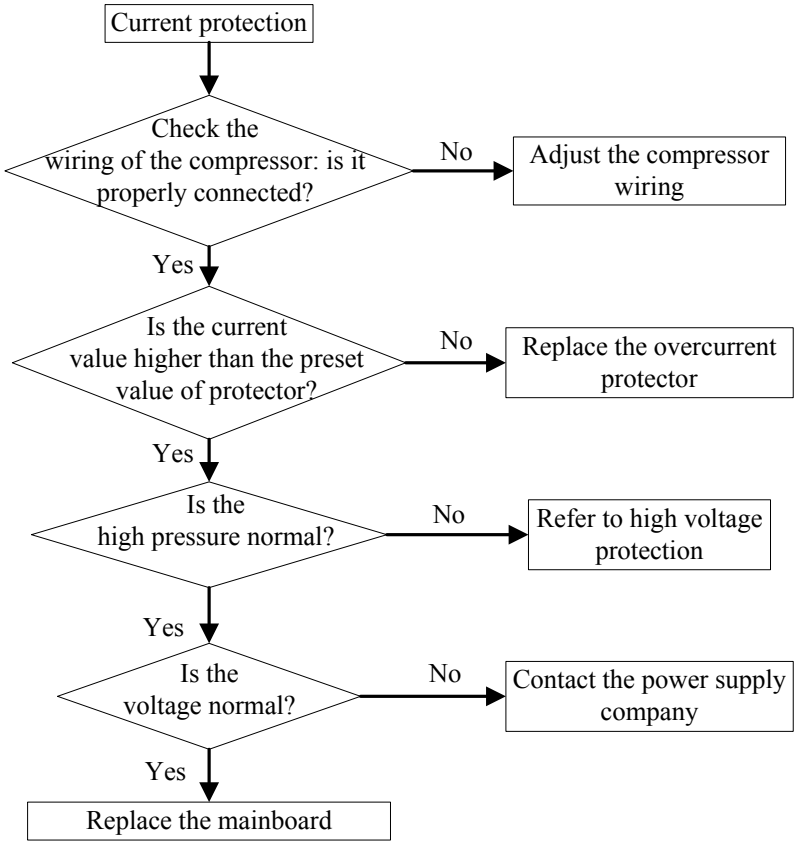

3.5 Malfunction display: Communication error

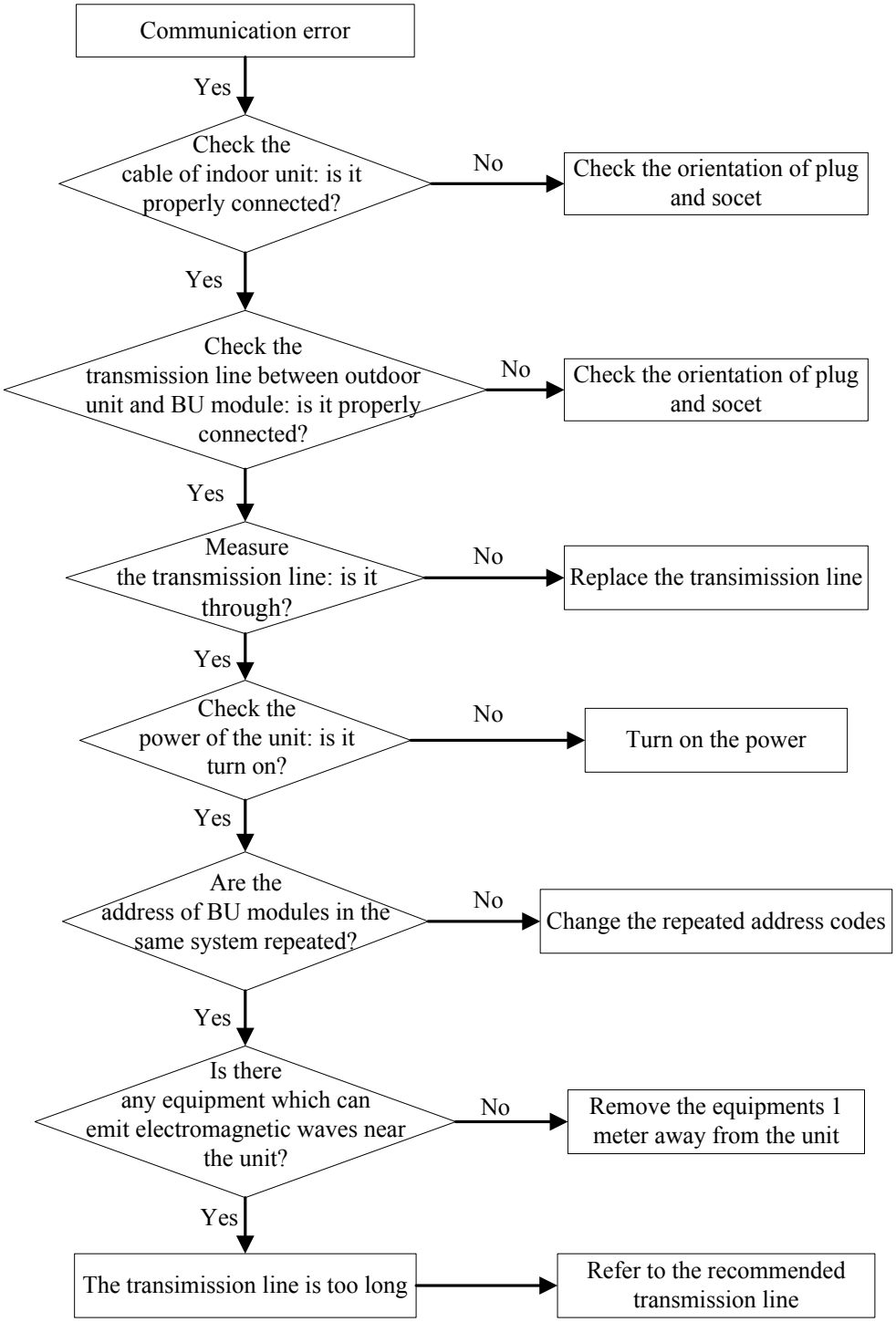

3.6 Malfunction display: Indoor unit water full protection

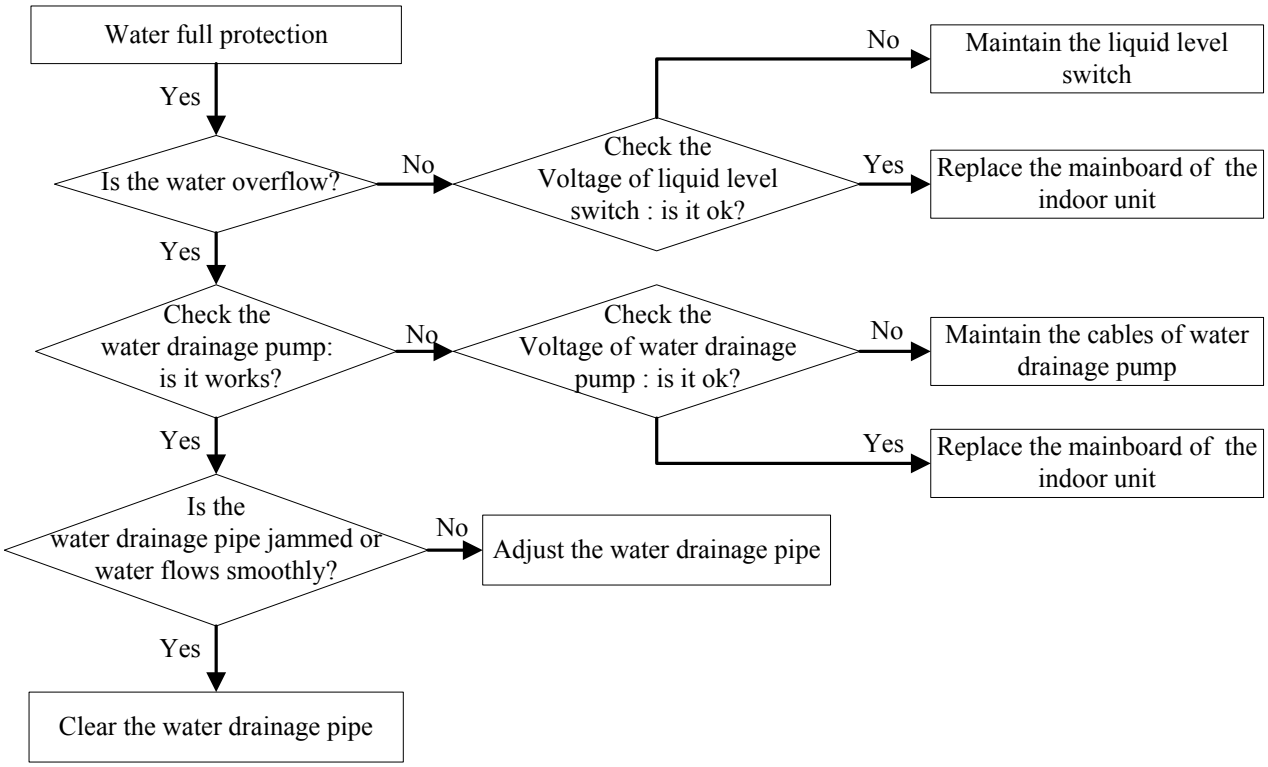

3.7 Malfunction display: Temperature sensor error

The resistance value of discharge temperature sensor is 50 KΩ;

The resistance value of outside temperature sensor and inside temperature sensor are all 15 KΩ;

The others are 20 KΩ.

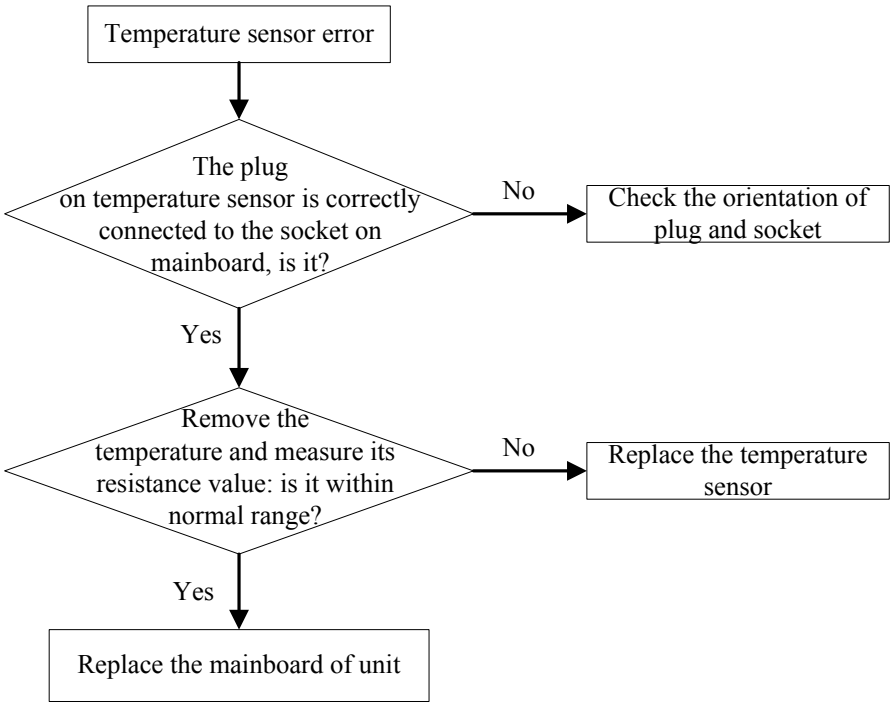

3.8 Malfunction display: High/Low pressure sensor error

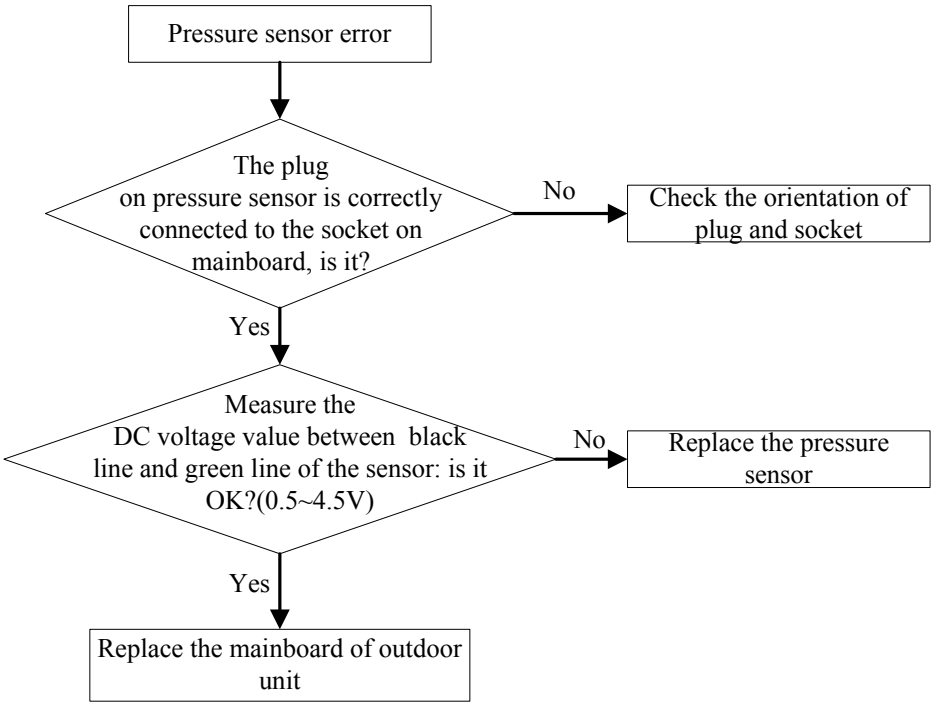

4 POWER DISTRIBUTION

4.1 Diagram of Power Distribution

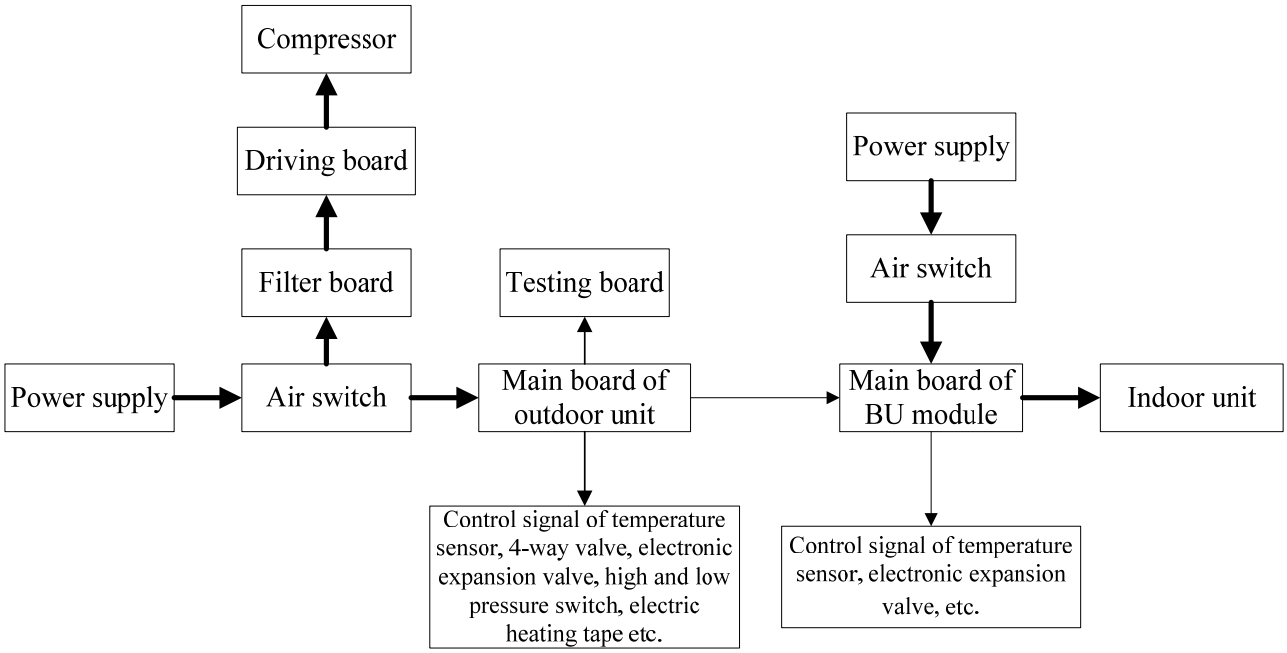

(The thick line represents power line while thin line represents the control line.)

4.2 Wiring diagram

Note:

This drawing is just for reference; please always refer to the electric wiring stuck to the unit for actual wiring.

4.2.1 Outdoor unit

GWHD(56S)NK3CO、GWHD(48S)NK3CO、GWHD(42S)NK3CO

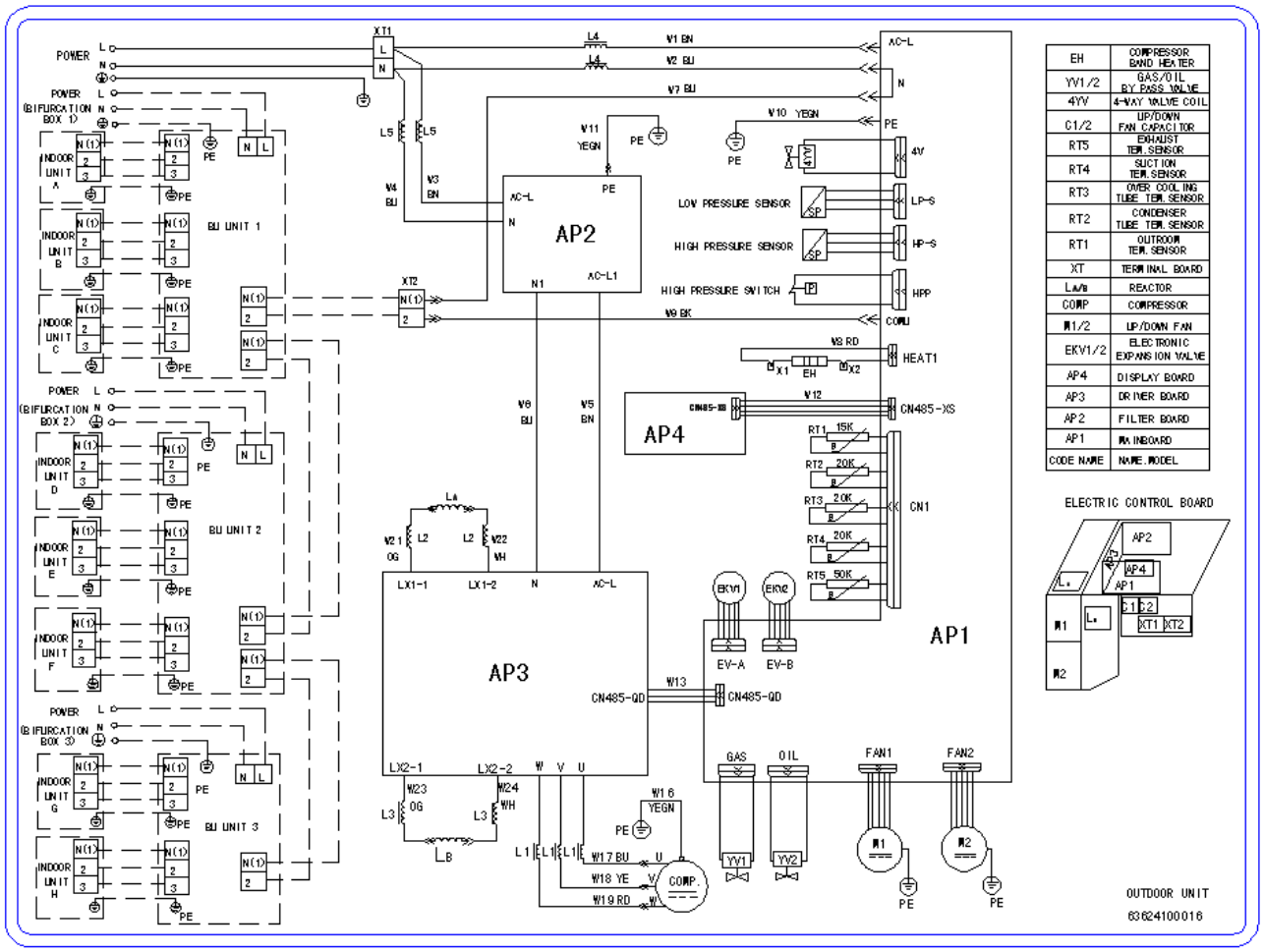

4.2.2 Indoor unit

1) Wall mounted type

◆ Hansol

GWH(07)TA-K3DNA1E/I; GWH(09)TA-K3DNA1E/I; GWH(12)TB-K3DNA1E/I; GWH(18)TC-K3DNA1E/I

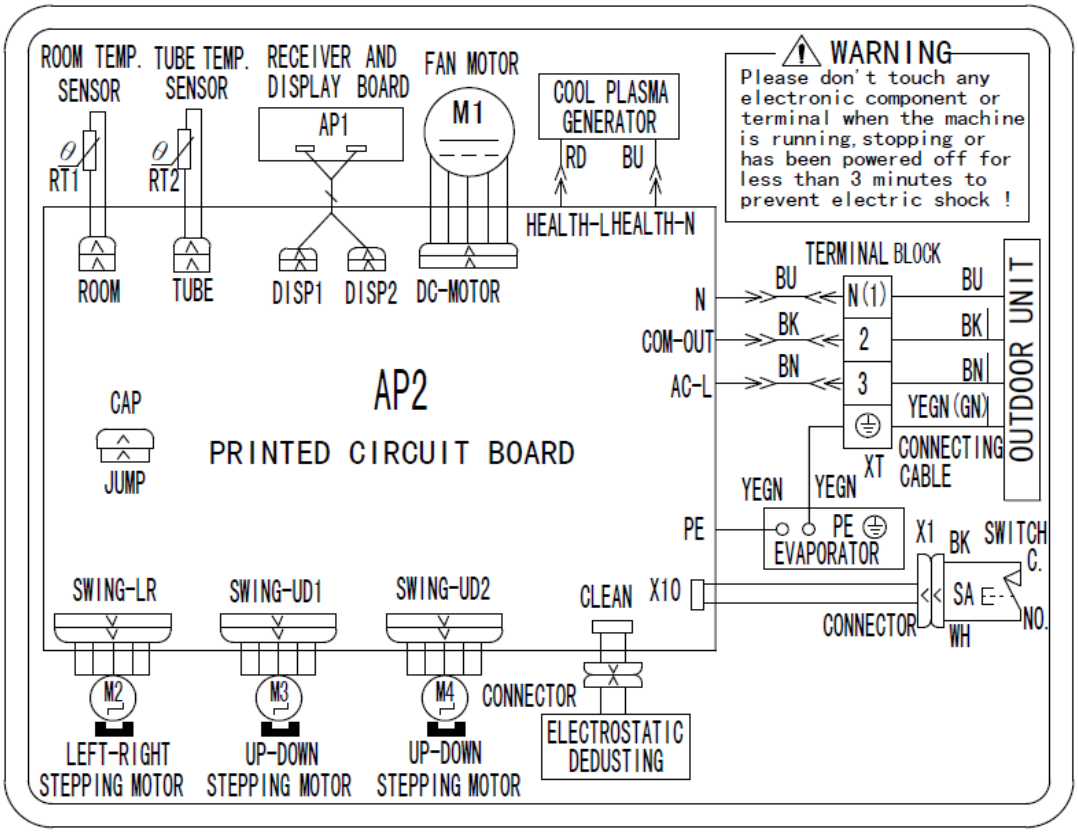

◆ U-Cool

GWH(07)UA-K3DNA1B/I; GWH(09)UA-K3DNA1B/I; GWH(12)UB-K3DNA1B/I; GWH(18)UC-K3DNA1B/I

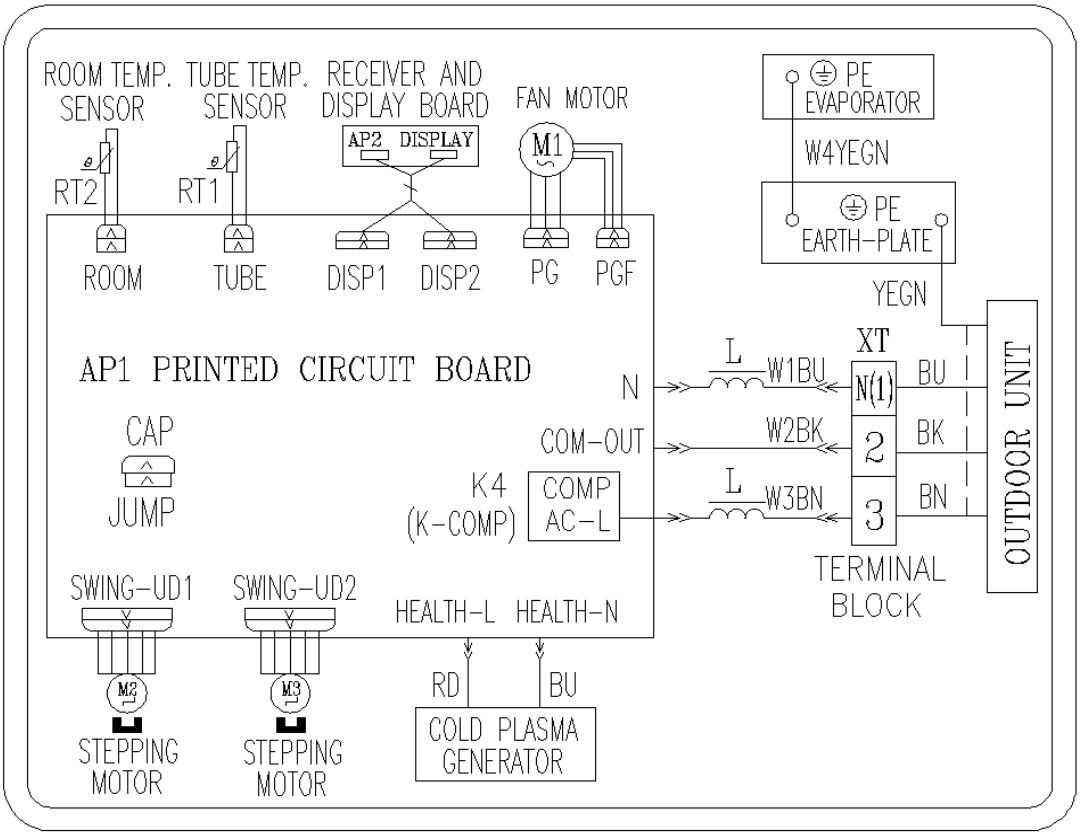

◆ Cozy

GWH(07)MA-K3DNA3E/I; GWH(09)MA-K3DNA3E/I; GWH(12)MB-K3DNA3E/I;GWH(18)MC-K3DNA3E/I

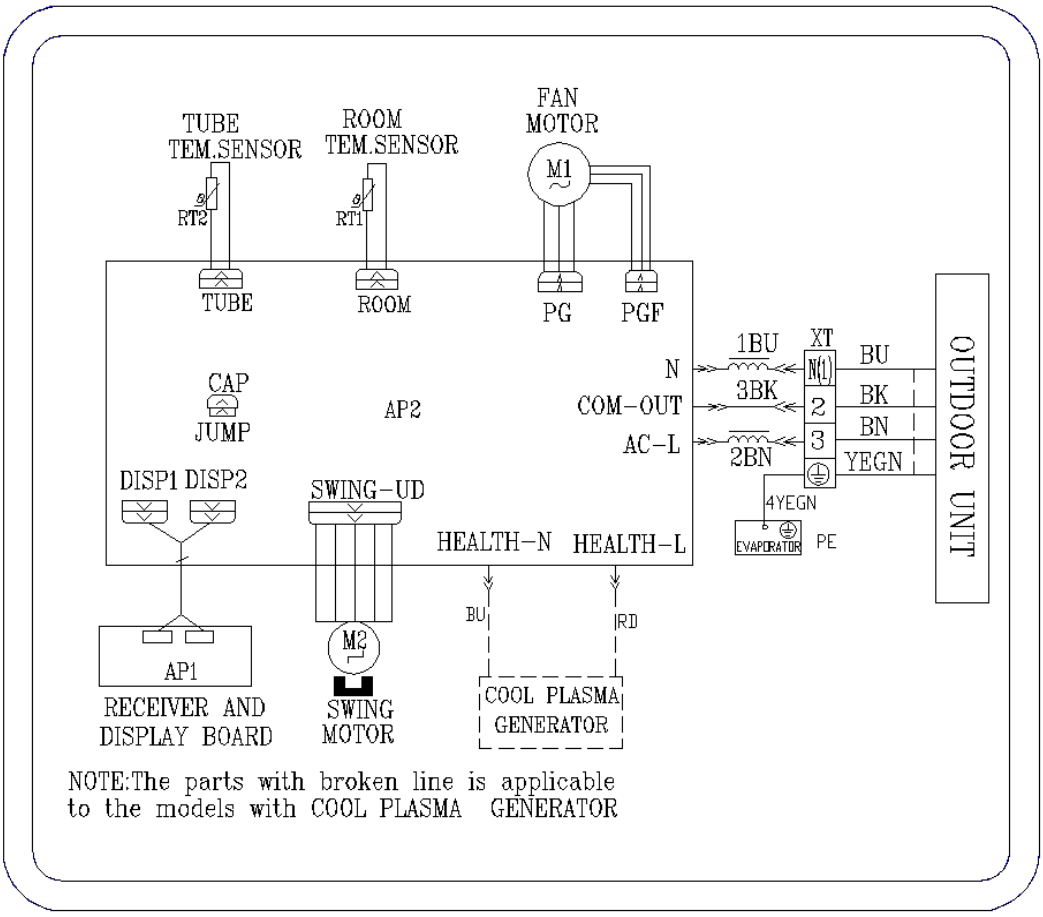

◆ Change

GWH(07)KF-K3DNA6E/I; GWH(09)KF-K3DNA6E/I; GWH(12)KF-K3DNA6E/I; GWH(18)KG-K3DNA6E/I

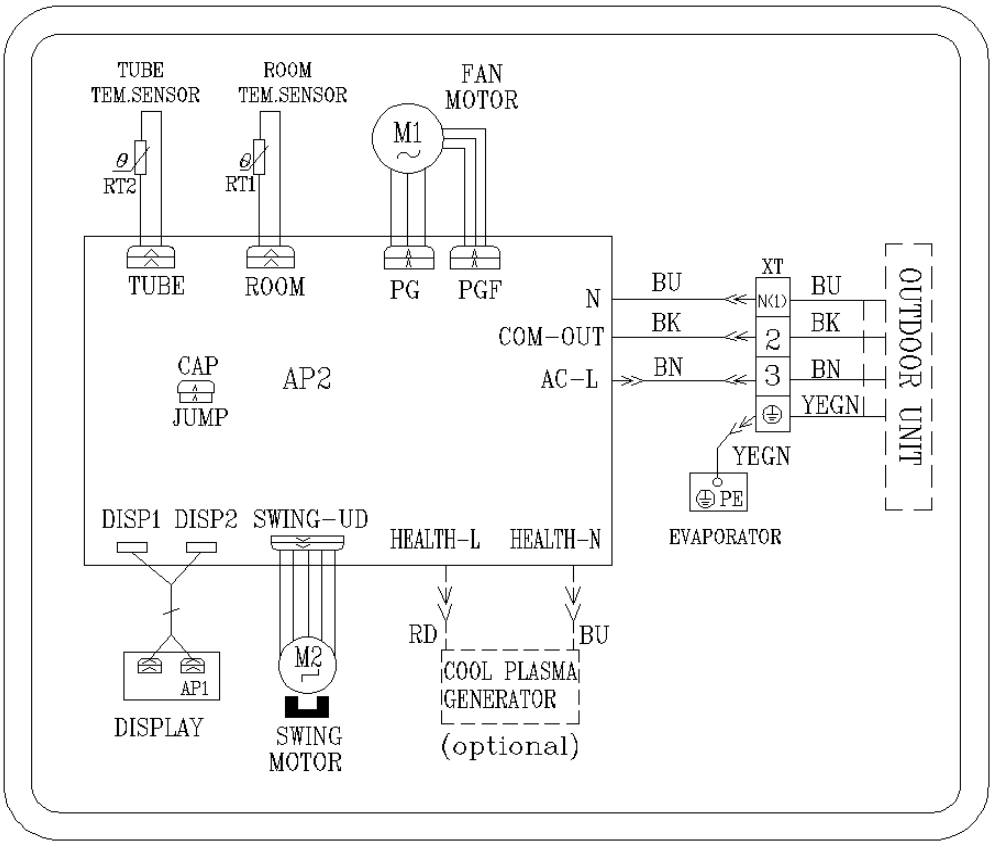

◆ Viola

GWH(07)RA-K3DNA3E/I; GWH(09)RA-K3DNA3E/I; GWH(12)RB-K3DNA3E/I; GWH(18)RC-K3DNA3E/I; GWH(24)RC-K3DNA1A/I

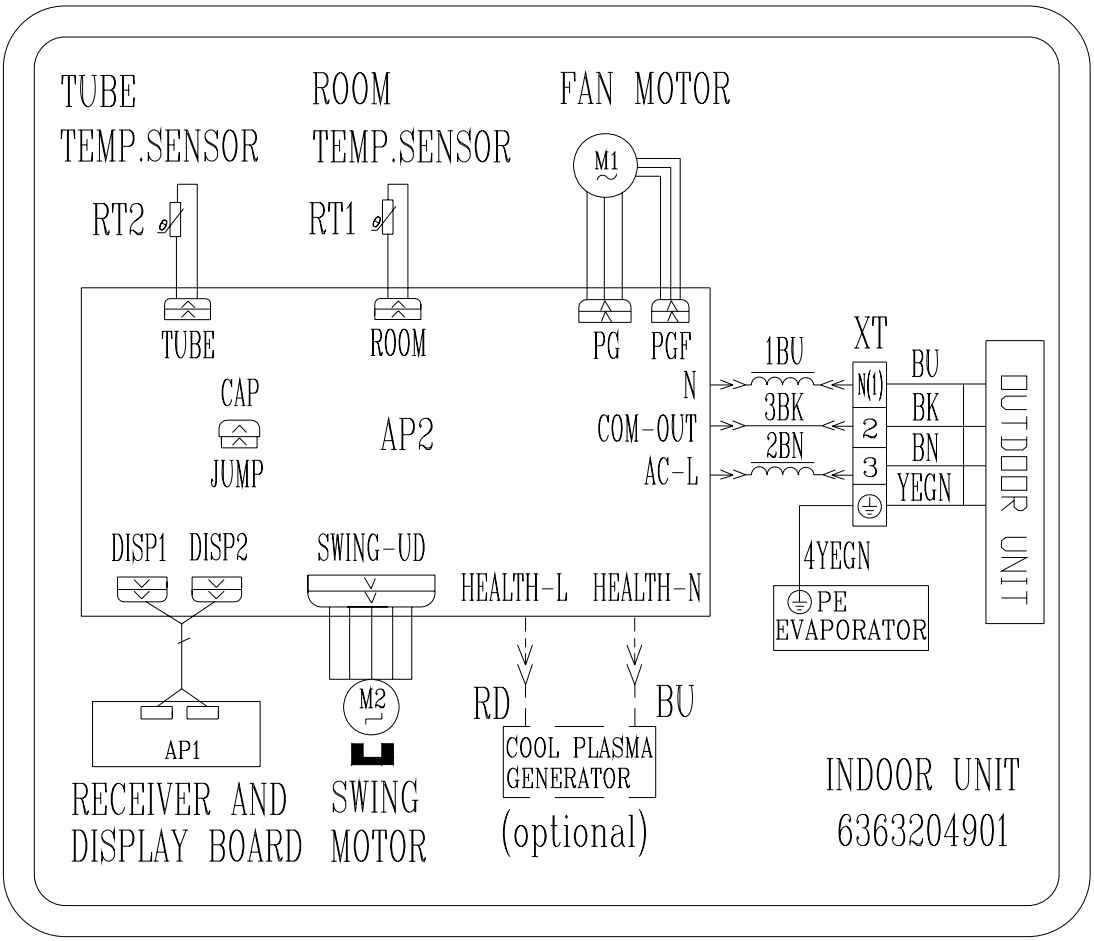

2) Duct type

GFH(09)EA-K3DNA1A/I; GFH(12)EA-K3DNA1A/I; GFH(18)EA-K3DNA1A/I; GFH(21)EA-K3DNA1A/I; GFH(24)EA-K3DNA1A/I

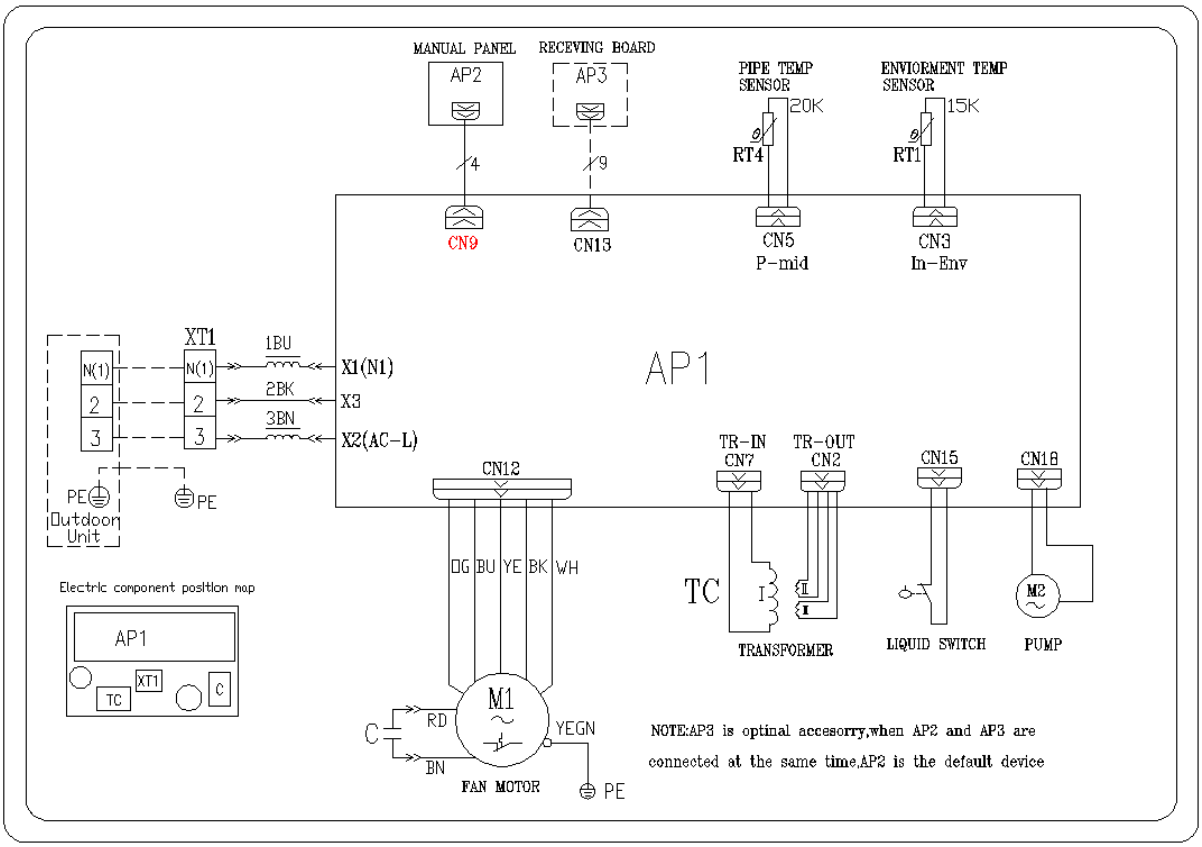

3) Cassette

GKH(12)BA-K3DNA2A/I; GKH(18)BA-K3DNA2A/I;

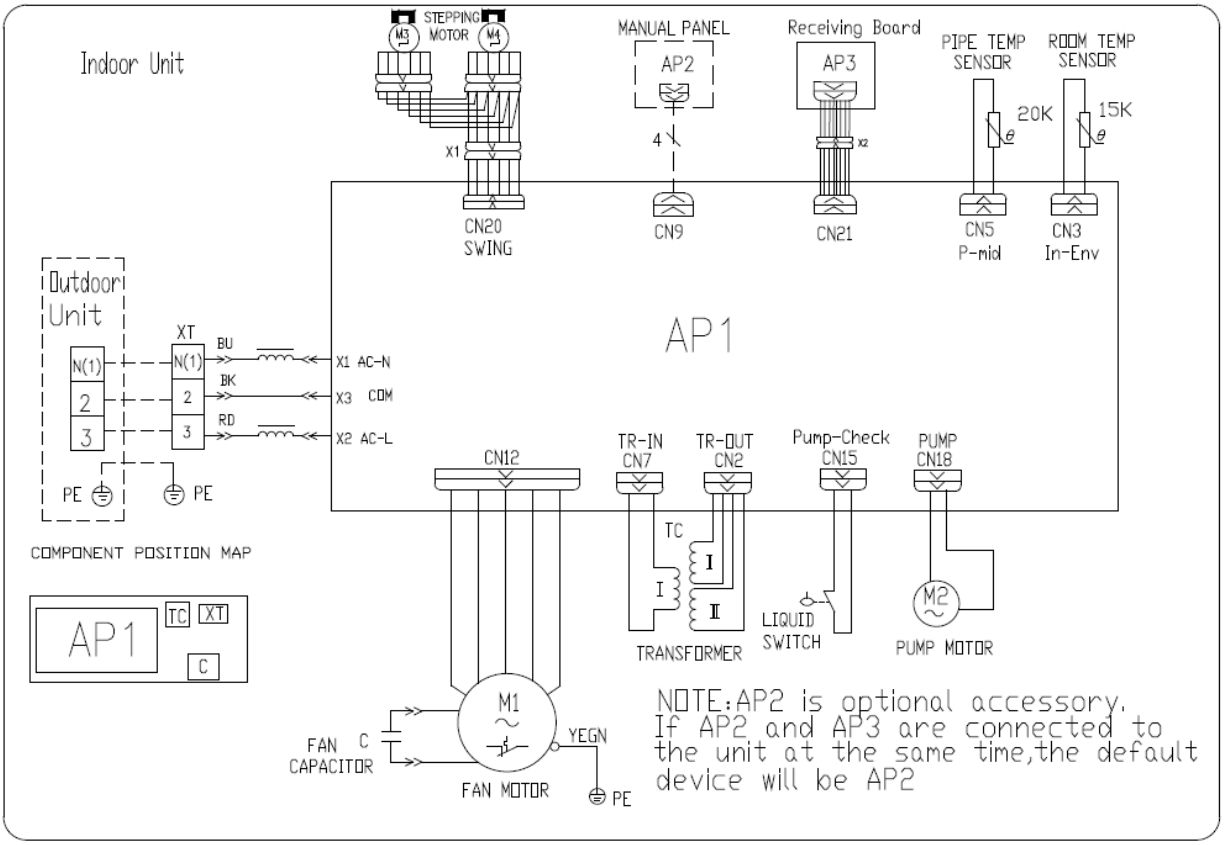

GKH(12)BA-K3DNA1A/I; GKH(18)BA-K3DNA1A/I; GKH(24)BA-K3DNA1A/I

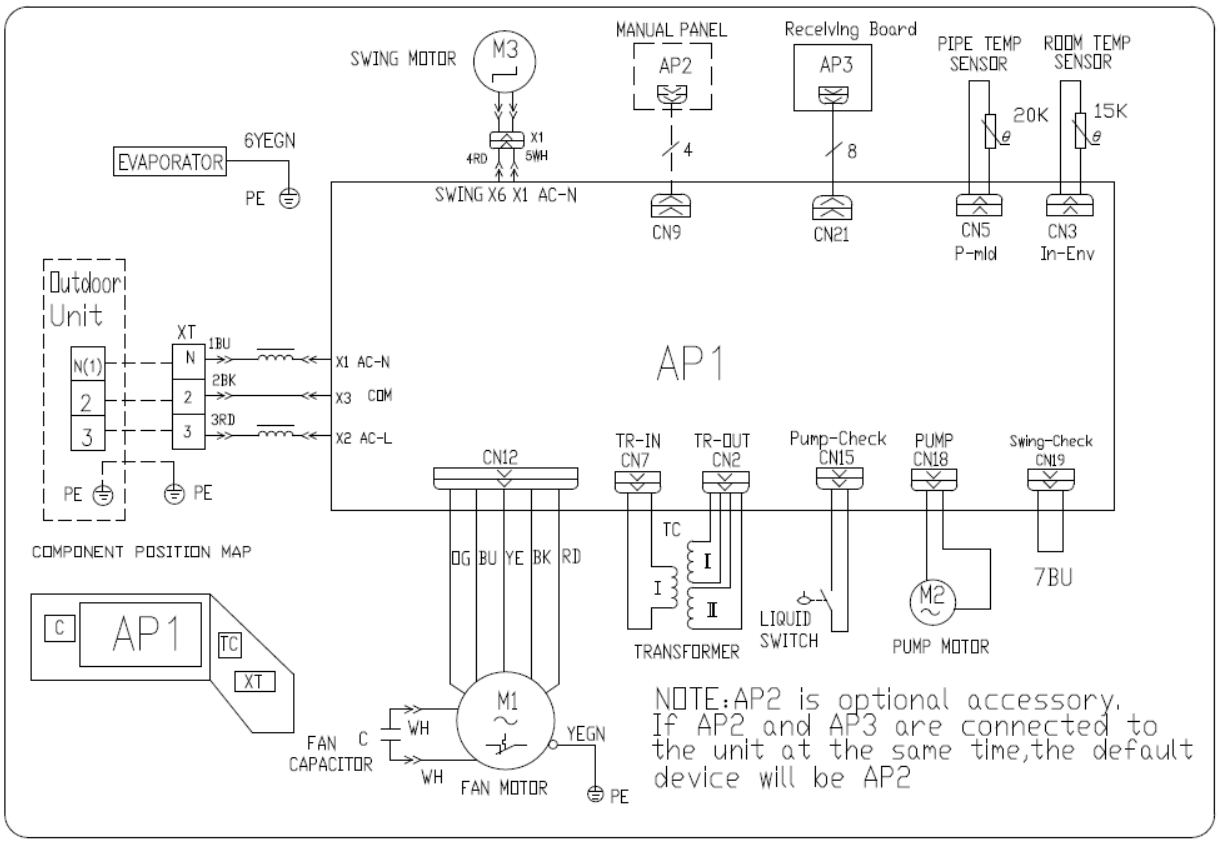

4) Floor ceiling

GTH(09)BA-K3DNA1A/I; GTH(12)BA-K3DNA1A/I; GTH(18)BA-K3DNA1A/I; GTH(24)BA-K3DNA1A/I

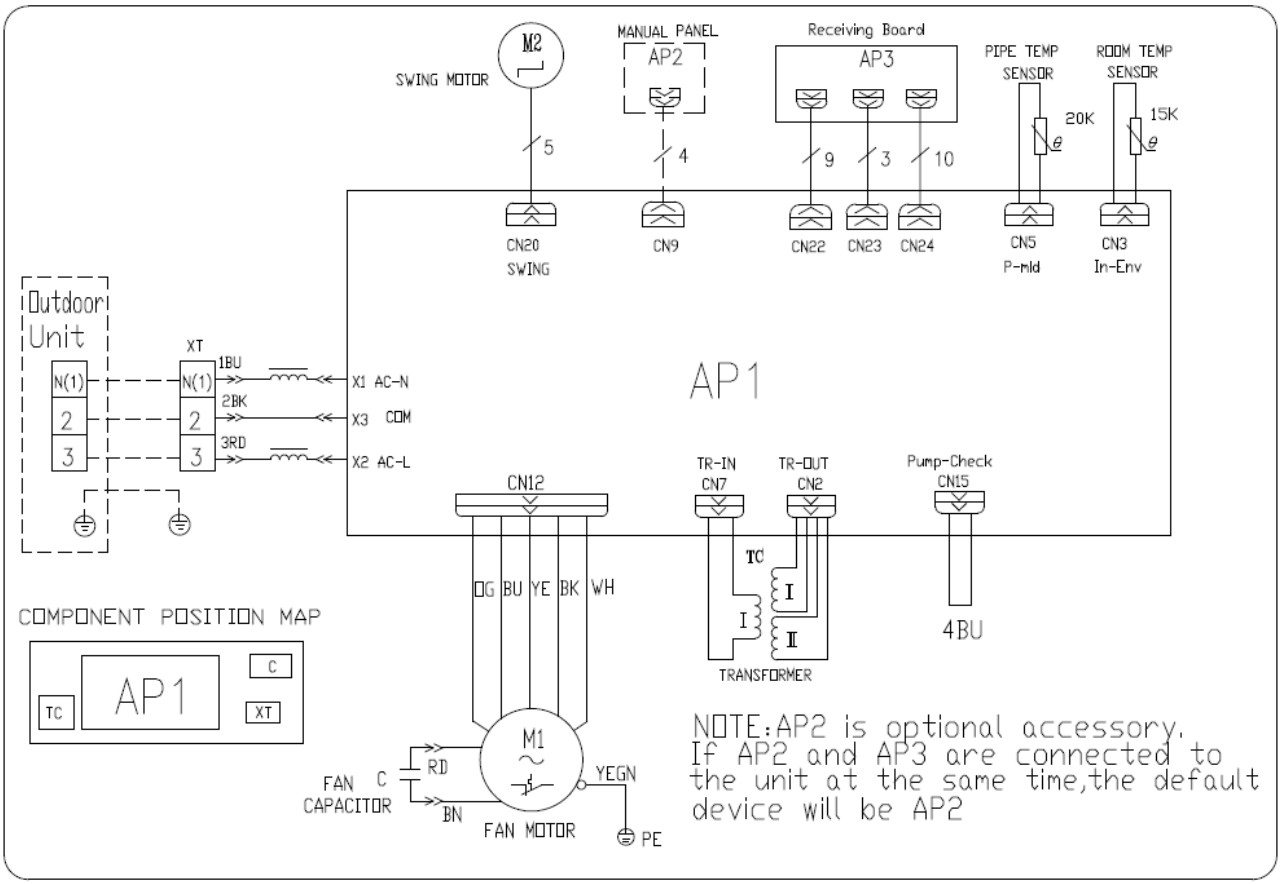

5) Console

GEH(09)AA-K3DNA1C/I; GEH(12)AA-K3DNA1C/I; GEH(18)AA-K3DNA1C/I

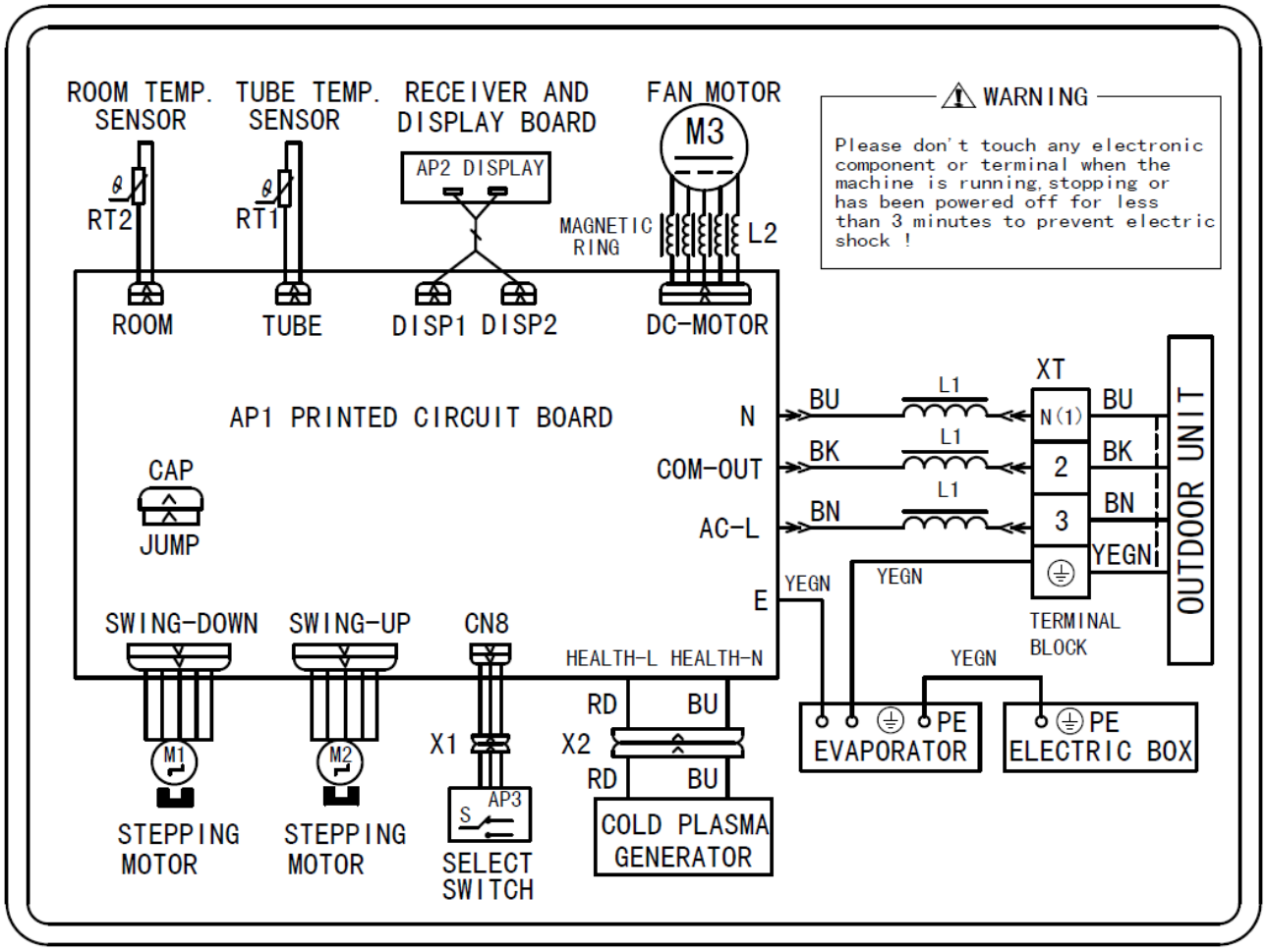

4.2.3 BU module

FXA2A-K; FXA2B-K

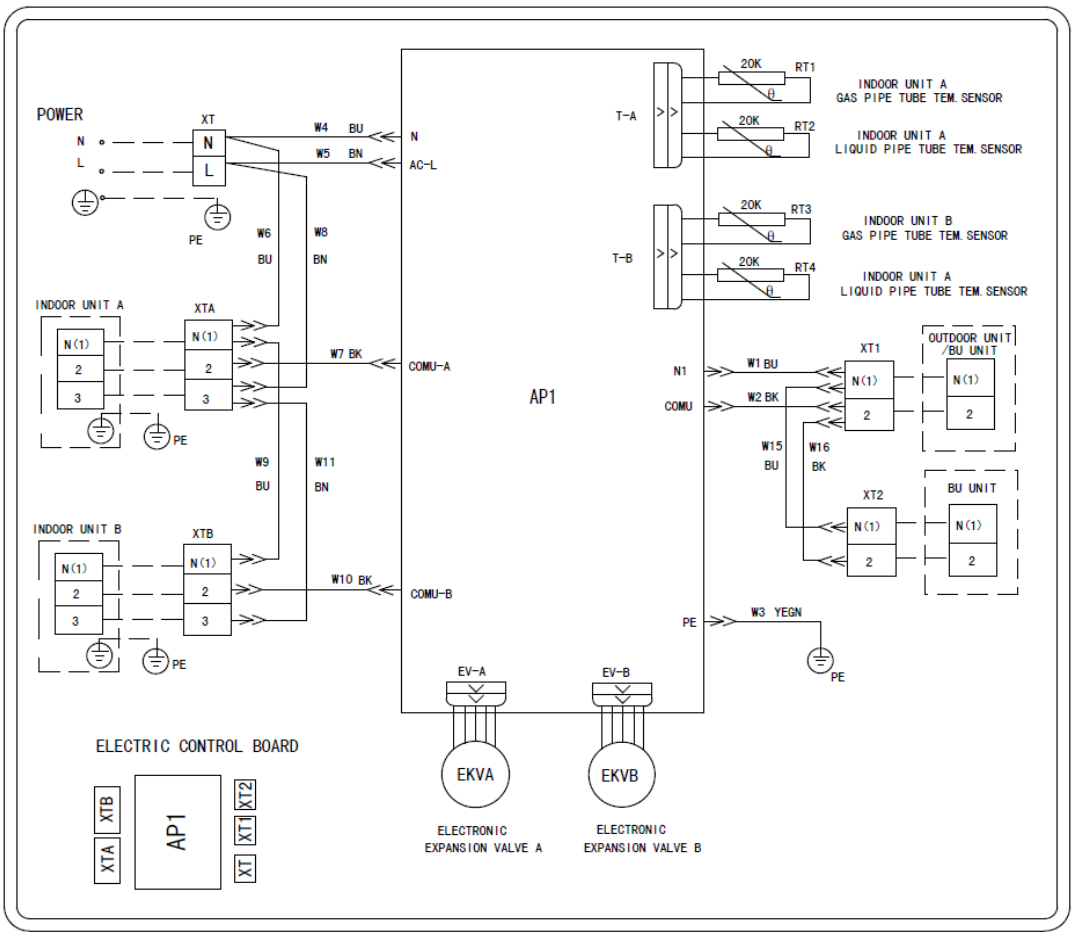

FXA3A-K; FXA3B-K

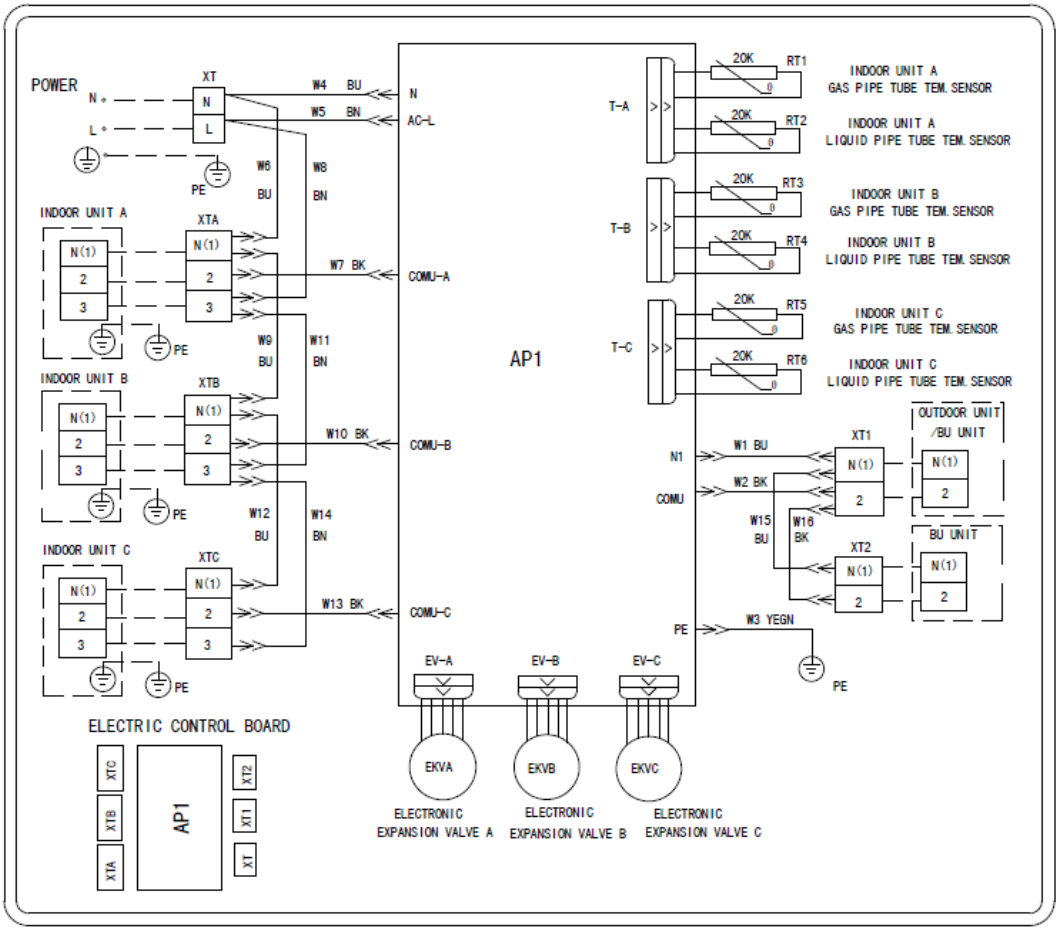

5 THE RESISTANCES OF COMMON TEMPERATURE SENSORS

5.1 15 KΩ

Temp. （℃）	Resistance (kΩ)	Voltage (15K/5V)	Voltage (15K/3.3V）	Temp. （℃）	Resistance (kΩ)	Voltage (15K/5V)	Voltage (15K/3.3V）
-20	144.000	0.472	0.311	20	18.750	2.222	1.467
-19	138.100	0.490	0.323	21	17.930	2.278	1.503
-18	128.600	0.522	0.345	22	17.140	2.334	1.540
-17	121.600	0.549	0.362	23	16.390	2.389	1.577
-16	115.000	0.577	0.381	24	15.680	2.445	1.613
-15	108.700	0.606	0.400	25	15.000	2.500	1.650
-14	102.900	0.636	0.420	26	14.360	2.554	1.686
-13	97.400	0.667	0.440	27	13.740	2.610	1.722
-12	92.220	0.699	0.462	28	13.160	2.663	1.758
-11	87.350	0.733	0.484	29	12.600	2.717	1.793
-10	82.750	0.767	0.506	30	12.070	2.771	1.829
-9	78.430	0.803	0.530	31	11.570	2.823	1.863
-8	74.350	0.839	0.554	32	11.090	2.875	1.897
-7	70.500	0.877	0.579	33	10.630	2.926	1.931
-6	66.880	0.916	0.605	34	10.200	2.976	1.964
-5	63.460	0.956	0.631	35	9.779	3.027	1.998
-4	60.230	0.997	0.658	36	9.382	3.076	2.030
-3	57.180	1.039	0.686	37	9.003	3.125	2.062
-2	54.310	1.082	0.714	38	8.642	3.172	2.094
-1	51.590	1.126	0.743	39	8.297	3.219	2.125
0	49.020	1.172	0.773	41	7.653	3.311	2.185
1	46.800	1.214	0.801	42	7.352	3.355	2.215
2	44.310	1.265	0.835	43	7.065	3.399	2.243
3	42.140	1.313	0.866	44	6.791	3.442	2.272
4	40.090	1.361	0.899	45	6.529	3.484	2.299
5	38.150	1.411	0.931	46	6.278	3.525	2.326
6	36.320	1.461	0.965	47	6.038	3.565	2.353
7	34.580	1.513	0.998	48	5.809	3.604	2.379
8	32.940	1.564	1.033	49	5.589	3.643	2.404
9	31.380	1.617	1.067	50	5.379	3.680	2.429
10	29.900	1.670	1.102	51	5.179	3.717	2.453
11	28.510	1.724	1.138	52	4.986	3.753	2.477
12	27.180	1.778	1.174	53	4.802	3.787	2.500
13	25.920	1.833	1.210	54	4.625	3.822	2.522
14	24.730	1.888	1.246	55	4.456	3.855	2.544
15	23.600	1.943	1.282	56	4.294	3.887	2.566
16	22.530	1.998	1.319	57	4.139	3.919	2.586
17	21.510	2.054	1.356	58	3.990	3.949	2.607
18	20.540	2.110	1.393	59	3.848	3.979	2.626
19	19.630	2.166	1.429	60	3.711	4.008	2.646

Temp. (℃)	Resistance (kΩ)	Voltage (15K/5V)	Voltage (15K/3.3V)	Temp. (℃)	Resistance (kΩ)	Voltage (15K/5V)	Voltage (15K/3.3V)
61	3.579	4.037	2.664	66	2.998	4.167	2.750
62	3.454	4.064	2.682	67	2.898	4.190	2.766
63	3.333	4.091	2.700	68	2.797	4.214	2.781
64	3.217	4.117	2.717	69	2.702	4.237	2.796
65	3.105	4.143	2.734	70	2.611	4.259	2.811

5.2 20 KΩ

Temp. (℃)	Resistance (kΩ)	Voltage (15K/5V)	Voltage (15K/3.3V)	Temp. (℃)	Resistance (kΩ)	Voltage (15K/5V)	Voltage (15K/3.3V)
-30	361.8	0.262	0.173	2	59.08	1.265	0.835
-29	339.8	0.278	0.183	3	56.19	1.313	0.866
-28	319.2	0.295	0.195	4	53.46	1.361	0.898
-27	300	0.313	0.206	5	50.87	1.411	0.931
-26	282.2	0.331	0.218	6	48.42	1.462	0.965
-25	265.5	0.350	0.231	7	46.11	1.513	0.998
-24	249.9	0.371	0.245	8	43.92	1.564	1.033
-23	235.3	0.392	0.259	9	41.84	1.617	1.067
-22	221.6	0.414	0.273	10	39.87	1.670	1.102
-21	208.9	0.437	0.288	11	38.01	1.724	1.138
-20	196.9	0.461	0.304	12	36.24	1.778	1.174
-19	181.4	0.497	0.328	13	34.57	1.833	1.209
-18	171.4	0.522	0.345	14	32.98	1.888	1.246
-17	162.1	0.549	0.362	15	31.47	1.943	1.282
-16	153.3	0.577	0.381	16	30.04	1.998	1.319
-15	145	0.606	0.400	17	28.68	2.054	1.356
-14	137.2	0.636	0.420	18	27.39	2.110	1.393
-13	129.9	0.667	0.440	19	26.17	2.166	1.429
-12	123	0.699	0.462	20	25.01	2.222	1.466
-11	116.5	0.733	0.484	21	23.9	2.278	1.503
-10	110.3	0.767	0.507	22	22.85	2.334	1.540
-9	104.6	0.803	0.530	23	21.85	2.389	1.577
-8	99.13	0.839	0.554	24	20.9	2.445	1.614
-7	94	0.877	0.579	25	20	2.500	1.650
-6	89.17	0.916	0.605	26	19.14	2.555	1.686
-5	84.61	0.956	0.631	27	18.32	2.610	1.722
-4	80.31	0.997	0.658	28	17.55	2.663	1.758
-3	76.24	1.039	0.686	29	16.8	2.717	1.793
-2	72.41	1.082	0.714	30	16.1	2.770	1.828
-1	68.79	1.126	0.743	31	15.43	2.822	1.863
0	65.37	1.171	0.773	32	14.79	2.874	1.897
1	62.13	1.218	0.804	33	14.18	2.926	1.931

Temp. (℃)	Resistance (kΩ)	Voltage (15K/5V)	Voltage (15K/3.3V)	Temp. (℃)	Resistance (kΩ)	Voltage (15K/5V)	Voltage (15K/3.3V)
34	13.59	2.977	1.965	55	5.942	3.855	2.544
35	13.04	3.027	1.998	56	5.726	3.887	2.565
36	12.51	3.076	2.030	57	5.519	3.919	2.586
37	12	3.125	2.063	58	5.32	3.949	2.607
38	11.52	3.173	2.094	59	5.13	3.979	2.626
39	11.06	3.220	2.125	60	4.948	4.008	2.646
40	10.62	3.266	2.155	61	4.773	4.037	2.664
41	10.2	3.311	2.185	62	4.605	4.064	2.682
42	9.803	3.355	2.215	63	4.443	4.091	2.700
43	9.42	3.399	2.243	64	4.289	4.117	2.717
44	9.054	3.442	2.272	65	4.14	4.143	2.734
45	8.705	3.484	2.299	66	3.998	4.167	2.750
46	8.37	3.525	2.326	67	3.861	4.191	2.766
47	8.051	3.565	2.353	68	3.729	4.214	2.781
48	7.745	3.604	2.379	69	3.603	4.237	2.796
49	7.453	3.643	2.404	70	3.481	4.259	2.811
50	7.173	3.680	2.429	71	3.364	4.280	2.825
51	6.905	3.717	2.453	72	3.252	4.301	2.838
52	6.648	3.753	2.477	73	3.144	4.321	2.852
53	6.403	3.787	2.500	74	3.04	4.340	2.865
54	6.167	3.822	2.522	75	2.94	4.359	2.877

5.3 50 KΩ

Temp. (℃)	Resistance (kΩ)	Voltage (15K/5V)	Voltage (15K/3.3V)	Temp. (℃)	Resistance (kΩ)	Voltage (15K/5V)	Voltage (15K/3.3V)
-30	911.56	0.054	0.036	-14	342.83	0.142	0.094
-29	853.66	0.058	0.038	-13	323.94	0.150	0.099
-28	799.98	0.062	0.041	-12	306.23	0.158	0.104
-27	750.18	0.066	0.043	-11	289.61	0.167	0.110
-26	703.92	0.070	0.046	-10	274.02	0.176	0.116
-25	660.93	0.075	0.049	-9	259.37	0.186	0.123
-24	620.94	0.079	0.052	-8	245.61	0.196	0.129
-23	583.72	0.084	0.056	-7	232.67	0.206	0.136
-22	549.04	0.089	0.059	-6	220.5	0.217	0.143
-21	516.71	0.095	0.063	-5	209.05	0.228	0.151
-20	486.55	0.101	0.066	-4	198.27	0.240	0.158
-19	458.4	0.107	0.070	-3	188.12	0.252	0.167
-18	432.1	0.113	0.075	-2	178.65	0.265	0.175
-17	407.51	0.120	0.079	-1	169.68	0.278	0.184
-16	384.51	0.127	0.084	0	161.02	0.292	0.193
-15	362.99	0.134	0.088	1	153	0.307	0.202

Temp. (℃)	Resistance (kΩ)	Voltage (15K/5V)	Voltage (15K/3.3V)	Temp. (℃)	Resistance (kΩ)	Voltage (15K/5V)	Voltage (15K/3.3V)
2	145.42	0.322	0.212	45	21.425	1.591	1.050
3	138.26	0.337	0.223	46	20.601	1.634	1.078
4	131.5	0.353	0.233	47	19.814	1.677	1.107
5	126.17	0.367	0.242	48	19.061	1.721	1.136
6	119.08	0.387	0.256	49	18.34	1.764	1.164
7	113.37	0.405	0.267	50	17.651	1.808	1.193
8	107.96	0.424	0.280	51	16.99	1.853	1.223
9	102.85	0.443	0.292	52	16.358	1.897	1.252
10	98.006	0.463	0.306	53	15.753	1.942	1.281
11	93.42	0.483	0.319	54	15.173	1.986	1.311
12	89.075	0.505	0.333	55	14.618	2.031	1.340
13	84.956	0.527	0.348	56	14.085	2.076	1.370
14	81.052	0.549	0.362	57	13.575	2.121	1.400
15	77.349	0.572	0.378	58	13.086	2.166	1.429
16	73.896	0.596	0.393	59	12.617	2.211	1.459
17	70.503	0.621	0.410	60	12.368	2.235	1.475
18	67.338	0.647	0.427	61	11.736	2.300	1.518
19	64.333	0.673	0.444	62	11.322	2.345	1.548
20	61.478	0.700	0.462	63	10.925	2.389	1.577
21	58.766	0.727	0.480	64	10.544	2.434	1.606
22	56.189	0.755	0.499	65	10.178	2.478	1.635
23	53.738	0.784	0.518	66	9.8269	2.522	1.664
24	51.408	0.814	0.537	67	9.4896	2.565	1.693
25	49.191	0.845	0.558	68	9.1655	2.609	1.722
26	47.082	0.876	0.578	69	8.9542	2.638	1.741
27	45.074	0.908	0.599	70	8.5551	2.695	1.778
28	43.163	0.941	0.621	71	8.2676	2.737	1.806
29	41.313	0.974	0.643	72	7.9913	2.779	1.834
30	39.61	1.008	0.665	73	7.7257	2.821	1.862
31	37.958	1.043	0.688	74	7.4702	2.862	1.889
32	36.384	1.078	0.711	75	7.2245	2.903	1.916
33	34.883	1.114	0.735	76	6.9882	2.943	1.943
34	33.453	1.151	0.759	77	6.7608	2.983	1.969
35	32.088	1.188	0.784	78	6.542	3.023	1.995
36	30.787	1.226	0.809	79	6.3315	3.062	2.021
37	29.544	1.264	0.835	80	6.1288	3.100	2.046
38	28.359	1.303	0.860	81	5.9336	3.138	2.071
39	27.227	1.343	0.886	82	5.7457	3.175	2.096
40	26.147	1.383	0.913	83	5.5647	3.212	2.120
41	25.114	1.424	0.940	84	5.3903	3.249	2.144
42	24.128	1.465	0.967	85	5.2223	3.285	2.168
43	23.186	1.507	0.994	86	5.0605	3.320	2.191
44	22.286	1.549	1.022	87	4.9044	3.355	2.214

Temp. （℃）	Resistance (kΩ)	Voltage (15K/5V)	Voltage (15K/3.3V）	Temp. （℃）	Resistance (kΩ)	Voltage (15K/5V)	Voltage (15K/3.3V）
88	4.7541	3.389	2.237	110	2.4983	4.001	2.640
89	4.6091	3.423	2.259	111	2.4308	4.022	2.655
90	4.4693	3.456	2.281	112	2.3654	4.044	2.669
91	4.3345	3.488	2.302	113	2.3021	4.064	2.682
92	4.2044	3.520	2.323	114	2.2409	4.085	2.696
93	4.0789	3.551	2.344	115	2.1816	4.105	2.709
94	3.9579	3.582	2.364	116	2.1242	4.124	2.722
95	3.841	3.612	2.384	117	2.0686	4.143	2.734
96	3.7283	3.642	2.404	118	2.0148	4.162	2.747
97	3.6194	3.671	2.423	119	1.9626	4.180	2.759
98	3.5143	3.700	2.442	120	1.9123	4.197	2.770
99	3.4128	3.728	2.460	121	1.8652	4.214	2.781
100	3.3147	3.755	2.478	122	1.8158	4.232	2.793
101	3.22	3.782	2.496	123	1.7698	4.248	2.804
102	3.1285	3.809	2.514	124	1.7253	4.264	2.814
103	3.0401	3.834	2.531	125	1.6821	4.280	2.825
104	2.9547	3.860	2.547	126	1.6402	4.295	2.835
105	2.8721	3.884	2.564	127	1.5996	4.310	2.845
106	2.7922	3.909	2.580	128	1.5602	4.325	2.855
107	2.715	3.932	2.595	129	1.522	4.340	2.864
108	2.6404	3.956	2.611	130	1.485	4.354	2.873
109	2.5682	3.978	2.626				

6 DISASSEMBLY AND ASSEMBLY PROCEDURE OF MAIN PARTS

6.1 Outdoor Unit

6.1.1 Disassembly and Assembly of the plates

Remarks: Prior to the assembly of the plates, make sure the power supply is cut off.

Steps	Illustrations	Operation Instructions
1.Disconnect the coping plate	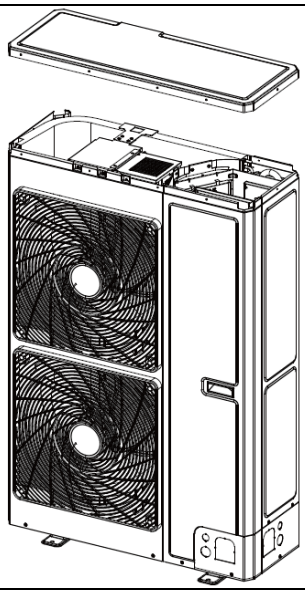	a) Unscrew the fixed screws of the coping plate; b) Remove the coping plate.
2.Disconnect the front side plate	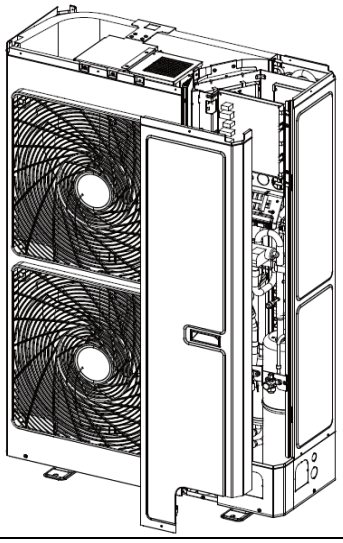	a) Unscrew the fixed screw of the front side plate; b) Remove the front side plate.
3.Disconnect the outer case	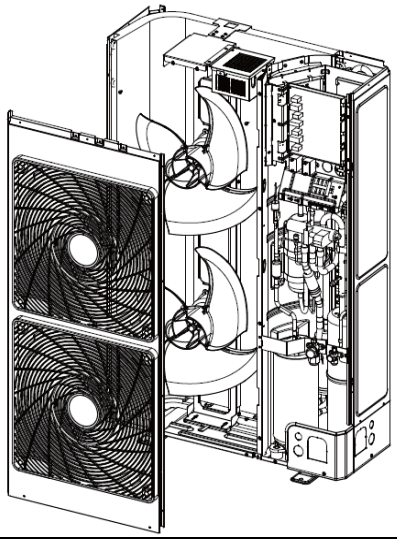	a) Unscrew the fixed screws of the outer case; b) Remove the outer case.

4.Disconnect the left side plate and rear side plate	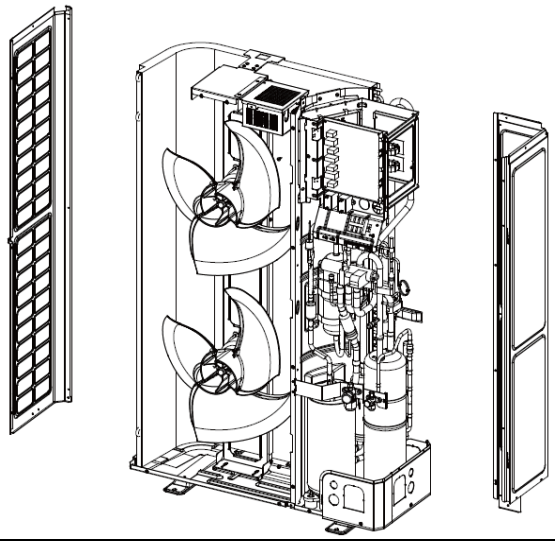	a) Unscrew the fixed screws of left side plate and rear side plate; b) Remove left side plate and rear side plate.

6.1.2 Assembly and Disassembly of the Compressor

Remarks: Prior to the assembly of the compressor, make sure there is no refrigerant in the pipeline and the power supply is cut off.

Steps	Illustrations	Operation Instructions
1.Remove the power code of the compressor	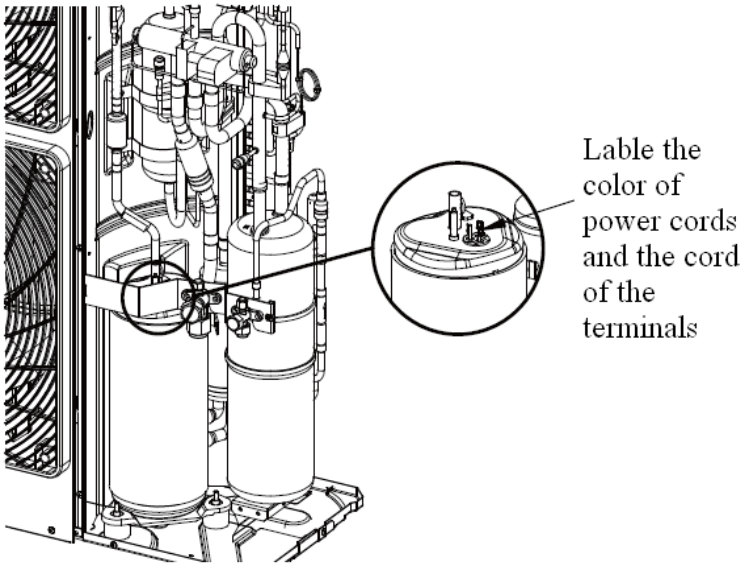	a) Unscrew the fixed screws of power code; b) Remove the power code. Note: when removing the power cord, please label the power cord and the terminals to avoid misconnecting next time.
2.Remove the connecting pipe of the compressor	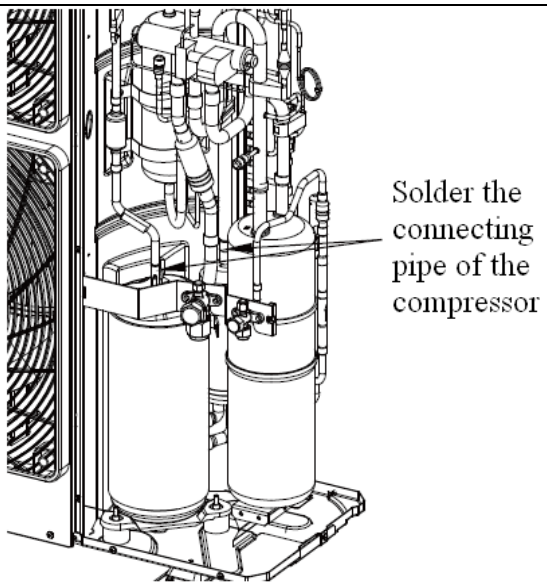	a) Solder the joint of connecting pipe of the compressor. b) Pull out the connecting pipe Note: never let the flame contact any other component.

3.Loose the fixed screws of the compressor base	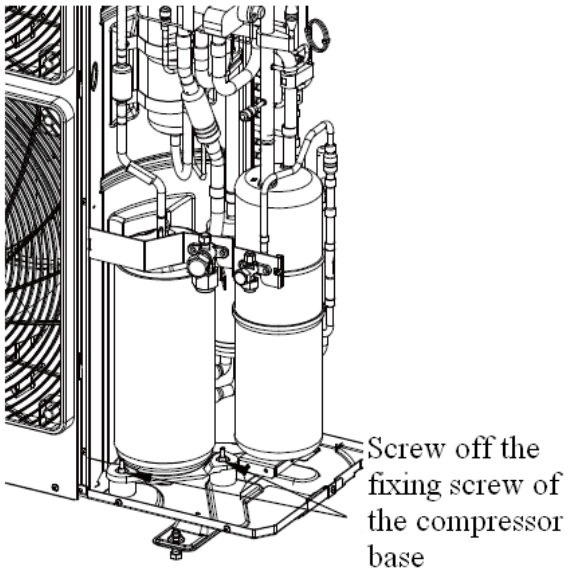	Unscrew the fixed screw of the compressor base
4.Remove the compressor away from the seating	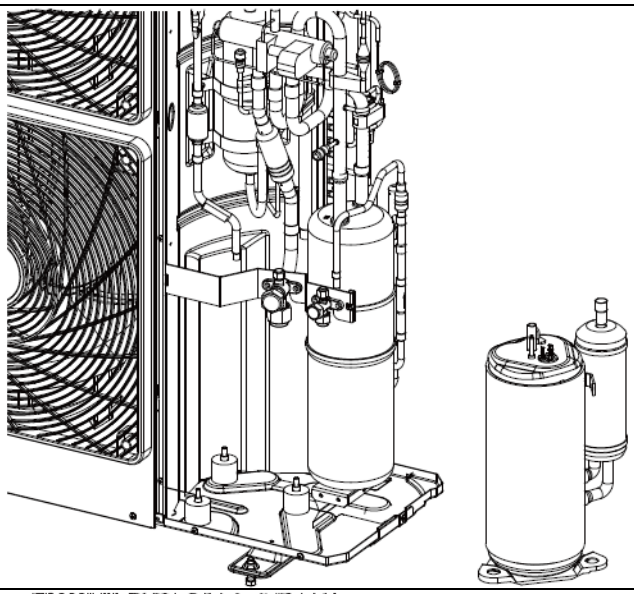	Remove and replace the compressor. Note: never let the flame contact any other component during the replacement.
5.Fix the new compressor on the seating	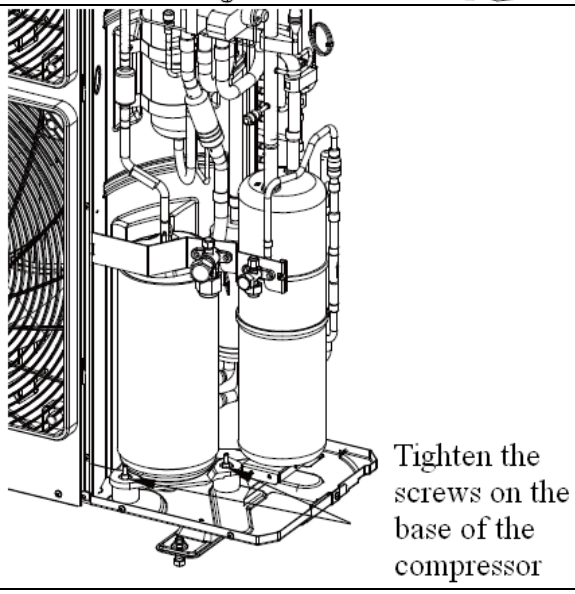	Tighten the screws on the seating of the new compressor.

6.Solder the pipeline with the suction and discharge ports of the compressor	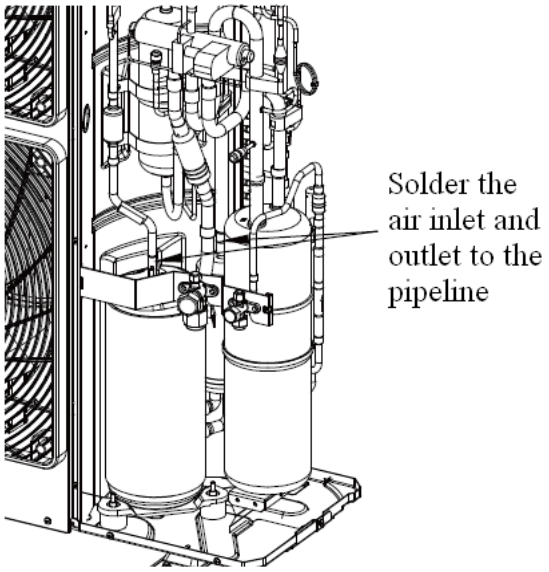	Solder the connecting pipe to make them connected Note: never let the flame contact any other component.
7.Reconnect the power cords	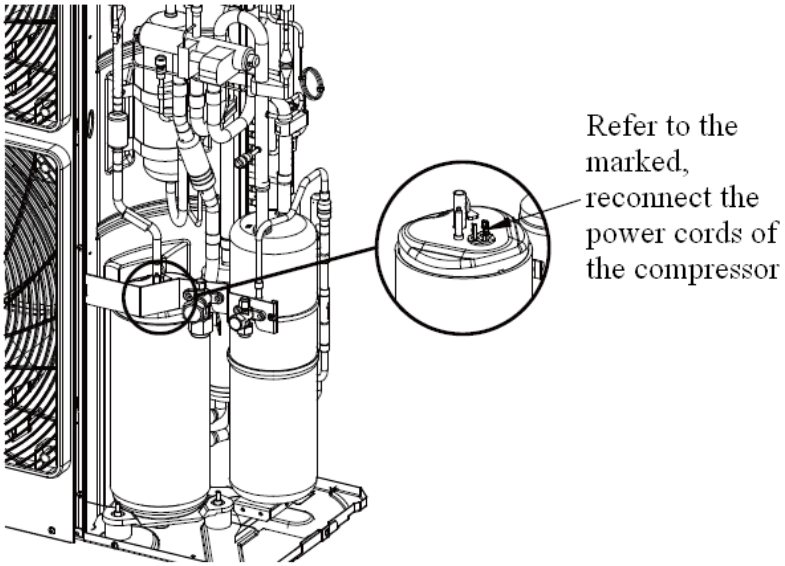	a) Tighten the fixing screw of the power cord. b) Connect the power cord. Note: mark the color of the power cord and corresponding terminal.
8.Put back the electric heating belt and the discharge temperature sensor etc.		
9.Check and screw back the plates	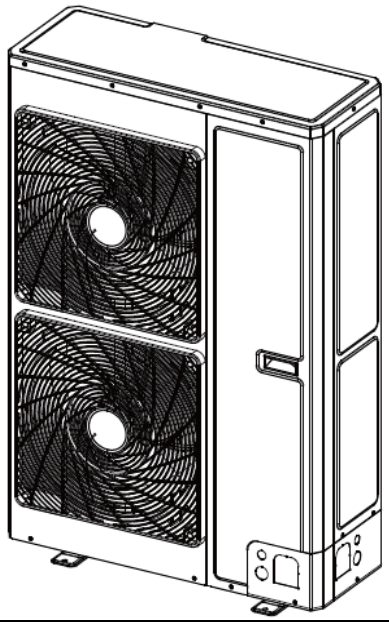	a) Check if the pipe is well connected. b) Check if the parts and wire well connected. c) If there is no problem, fix the cover.

6.1.3 Disassembly and Assembly of 4-way valve

Remarks: Prior to the assembly of the compressor, make sure there is no refrigerant in the pipeline and the power supply is cut off.

Steps	Illustrations	Operation Instructions
1.Remove the magnet coil of the 4-way valve	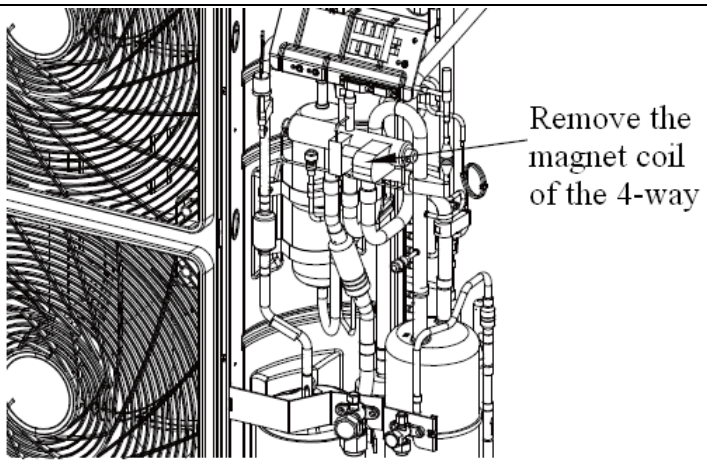	a) Unscrew the fixed screws of the magnet coil; b) Remove the magnet coil.
2.Disconnect the 4-way valve and the connecting pipe	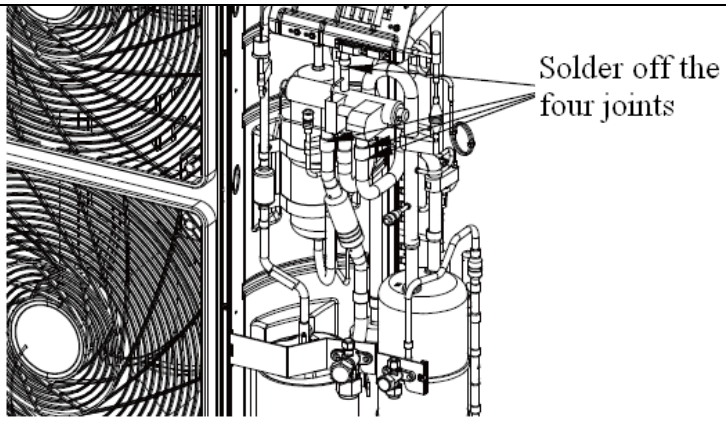	Solder off the connecting pipes. Note: never let the flame contact any other component.
3.Replace the new 4-way valve	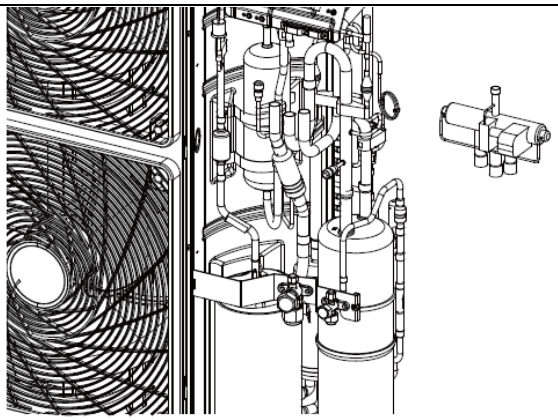	Install the new 4-way valve
4.Solder the new 4-way valve and install the magnet coil.	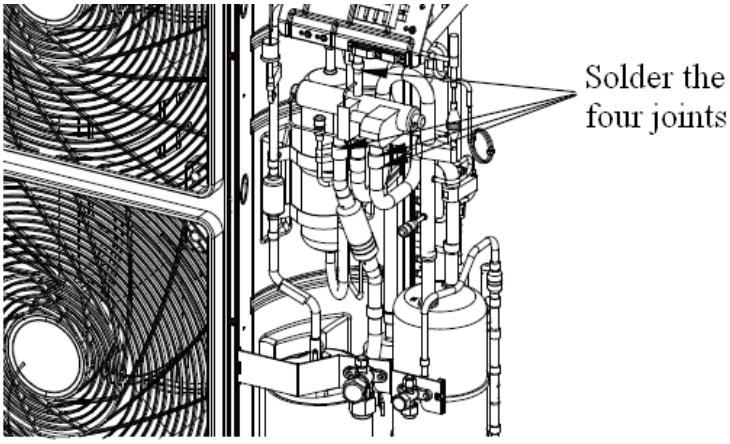	Solder the connecting pipes Note: To avoid heat damage the internal structure of the 4-way, wrap it to be brazed with sufficient wet cloths.

6.2 Indoor unit

6.2.1 Wall mounted type

◆ Removal and Assembly of Fan Motor

Remark: Prior to the assembly of the motor, make sure the power supply is cut off.

Steps	Illustrations	Operation Instructions
1.Remove the front panel, front case and electric box	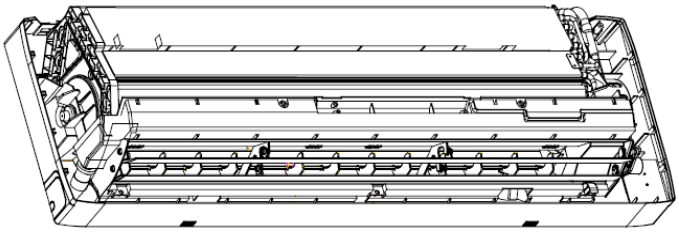	a) Loosen the screws; b) Unplug the motor terminals in the electric box. Loosen the earth screws and lift up
2.Remove the evaporator	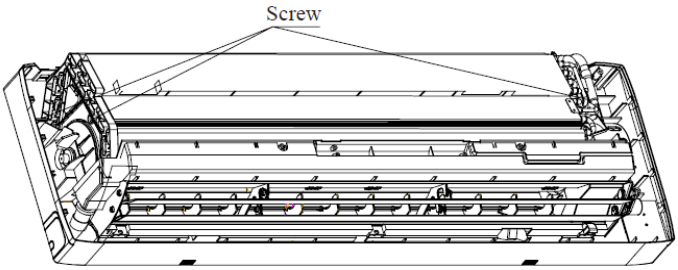	Unscrew the fixed screws of the evaporator, and then remove it
3.Remove the motor and cross flow fan	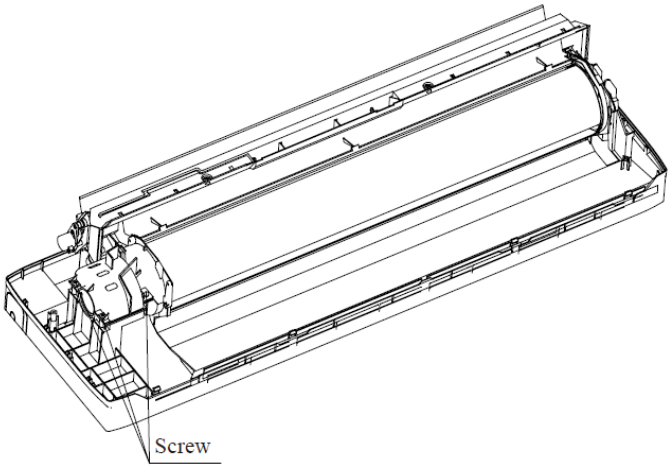	a) Unscrew the fixed screws of the motor press plate and cross flow fan b) Separate the motor from the cross flow fan.

6.2.2 Ducted type

◆ Removal and Assembly of Fan Motor

Remark: Prior to the assembly of the motor, make sure the power supply is cut off.

Steps	Illustrations	Operation Instructions
1.Pull out the electric wire of the motor	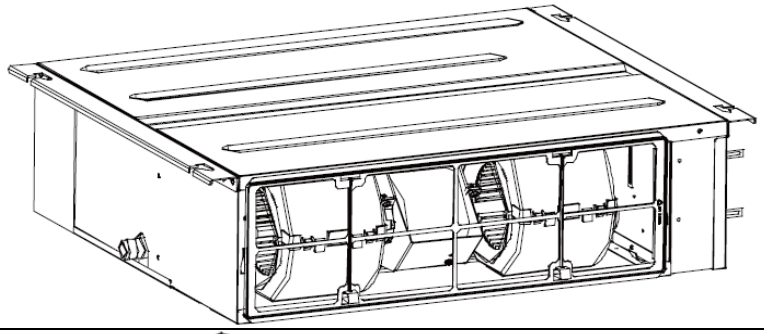	Open the cover plate of the electric box and then pull out the electric wire inside the box.
2.Remove the cover plate for return air	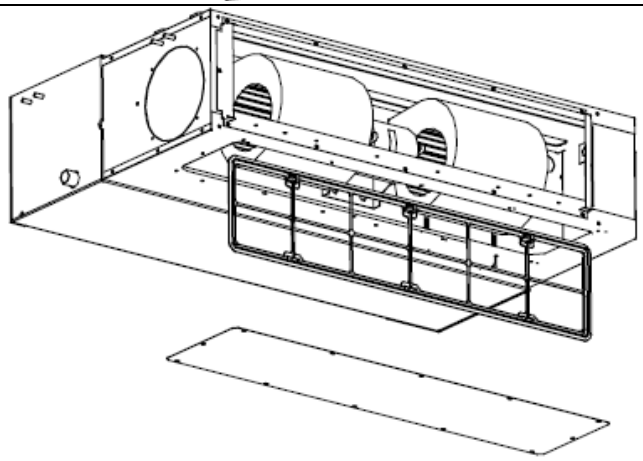	a) Remove the filter screen b) Unscrew the fixed screws of the return air
3.Remove the rear volute	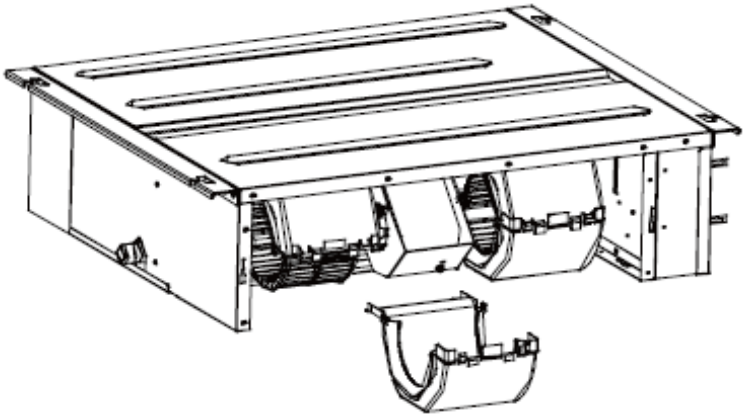	Undo the buckle of the rear and front volutes and then remove the rear volute away.
4. Remove the front volute	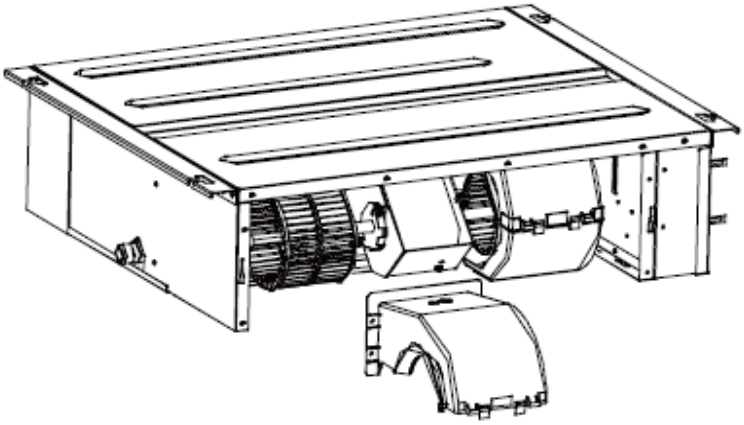	Unscrew the fixed screws of the front volute and then remove it away

5.Loosen the fan blade and fan motor	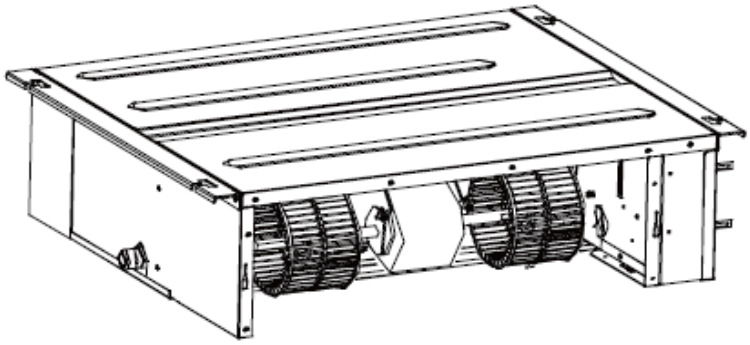	Unscrew the fixed screws of the fan blades and then undo the buckle of the motor
6. Remove the motor away.	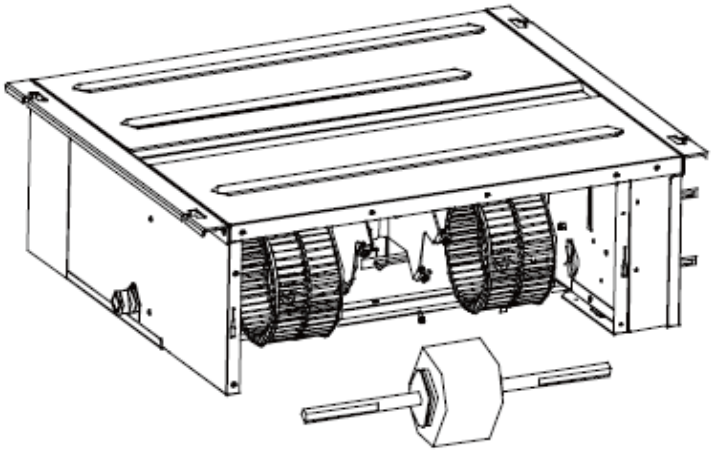	a) Separate the motor away from the motor support. b) Remove the fan blade c) Take the motor out from the return air frame Note: the motor support shall be removed in advance and then changed to the unit.
7.Replace with a new motor	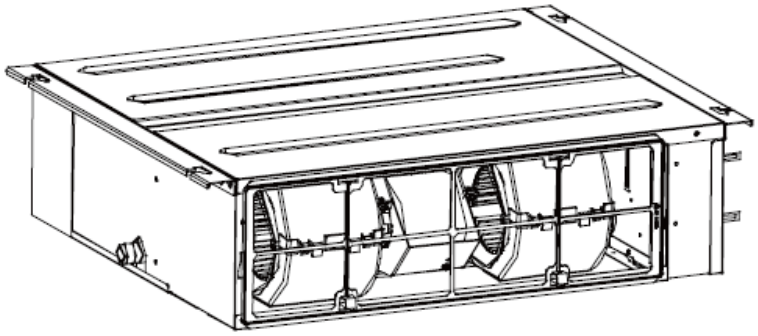	Assemble the fan as the reverse disassembly order and then take a power-on test.

6.2.3 One-way cassette type

◆ Assembly and Disassembly of the Water Pump

Remark: Prior to the assembly of the drainage pump, make sure the power supply is cut off.

Steps	Illustrations	Operation Instructions
1. Remove the front panel.	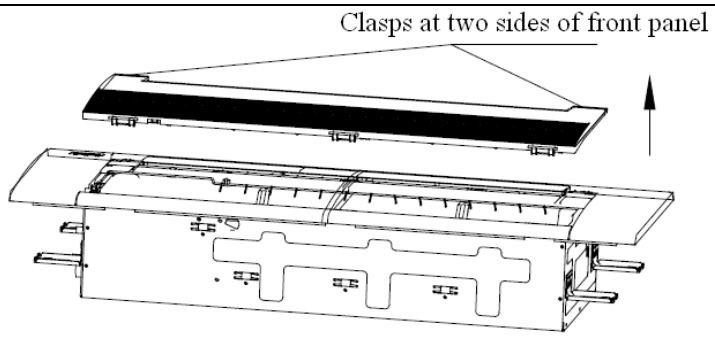	Slight press the locks at both ends of the front panel to open one side of it, and then undo three clasps to open the other side of the panel, after that, remove the panel upward away from the unit.
2. Unscrew the fixed screws	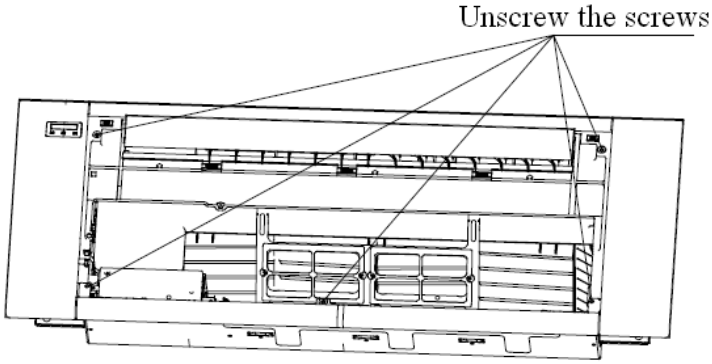	Unscrew the fixed screws of the front panel and main body of the unit
3. Remove the front panel assembly.	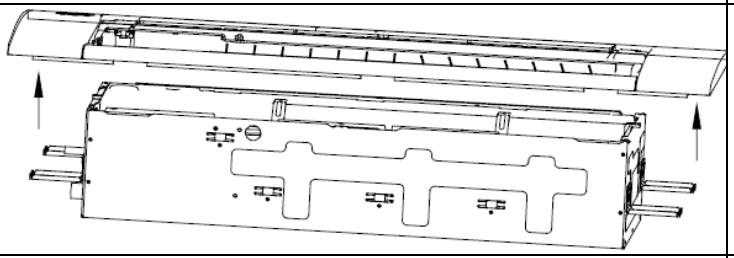	Remove the front panel assembly upward away from the unit.
4. Unscrew the fixed screws	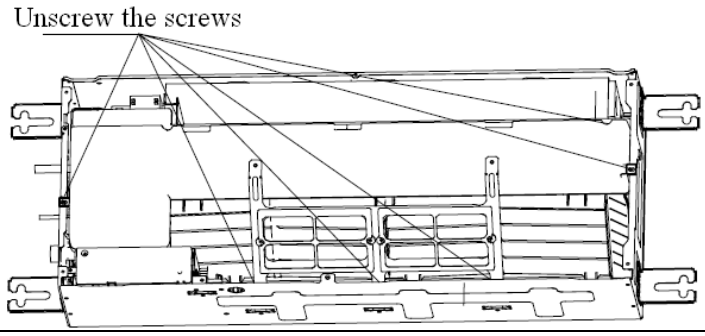	Unscrew the screws around the drain pan
5. Remove the drain pan and the bracket of the filtering screen.	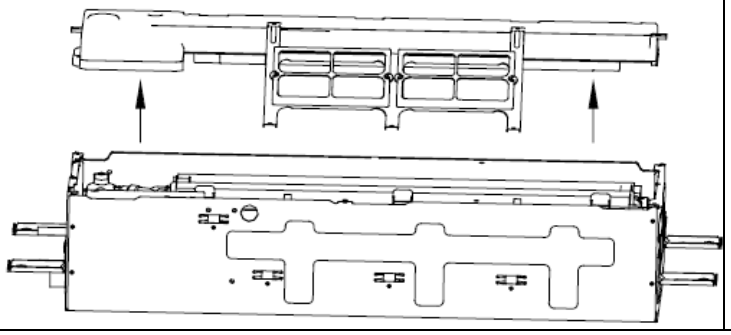	Remove the drain pan and the bracket of the filtering screen upward away from the unit.

6. Unscrew the fixed screws of drainage pump	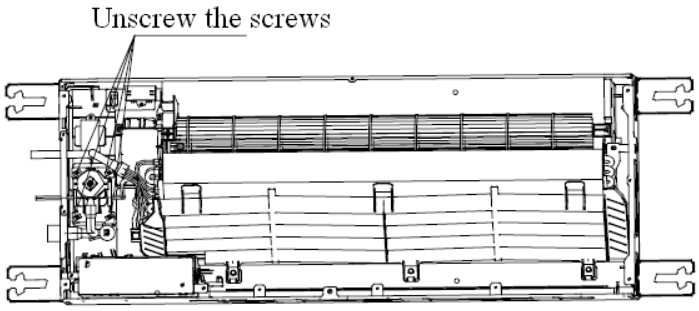	Unscrew the fixed screws of drainage pump
7. Remove drainage pump and replace it	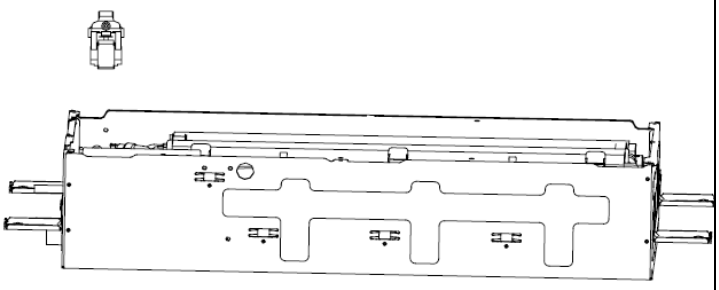	Remove drainage pump and replace it
8.Connect the water pipe to the drainage pump	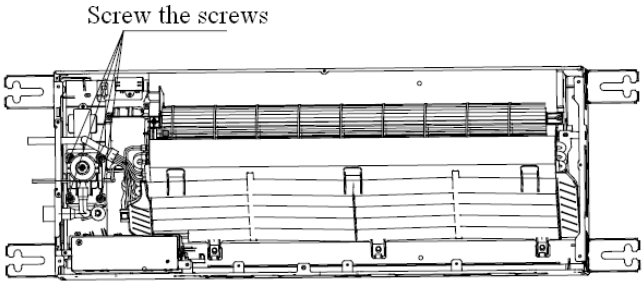	Connect the water pipe to the water pump and then screw the screws around it.
9. Install the drain pan and the bracket of the filtering screen.	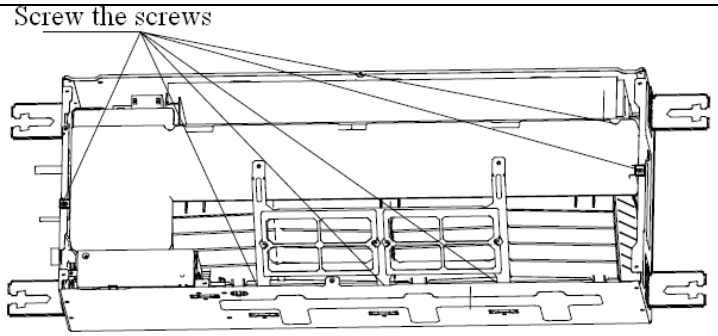	Place the drain pan and the bracket of the filtering screen at the original position, and then screw the screws around them with a screwdriver.
10. Install the front panel assembly.	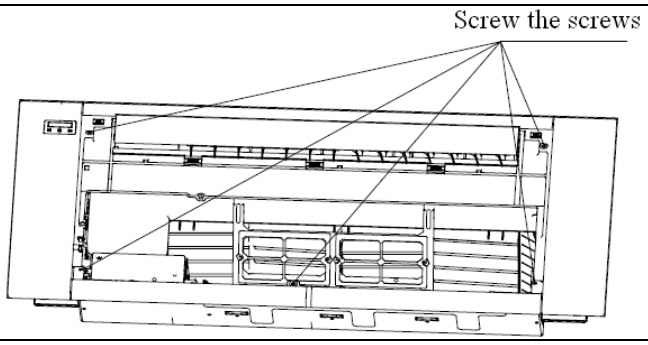	Place the front panel assembly at the original place and screw the screws around it
11. Install the front panel	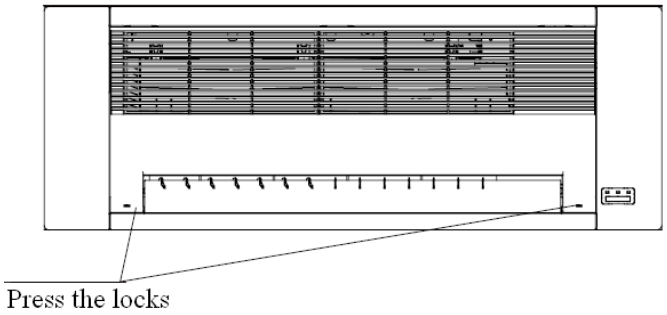	Put the front panel at the original place, and press the locks at both ends to secure it.

6.2.4 Four-way cassette type

◆ Removal and Assembly of Fan Motor

Remark: Prior to the assembly of the motor, make sure the power supply is cut off.

Steps	Illustrations	Operation Instructions
1.Unscrew the fixed screws of the water tray	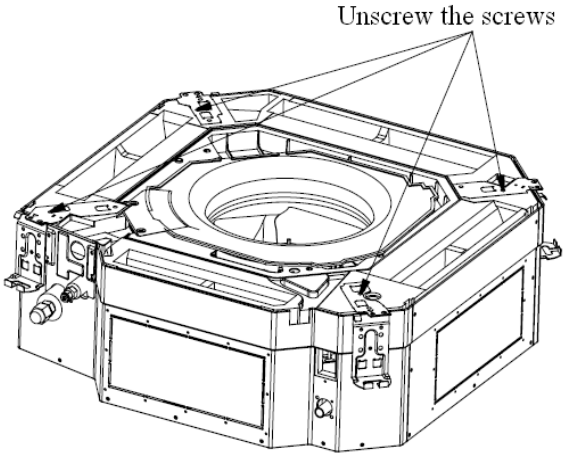	Unscrew the fixed screws of the water tray
2.Remove the water tray	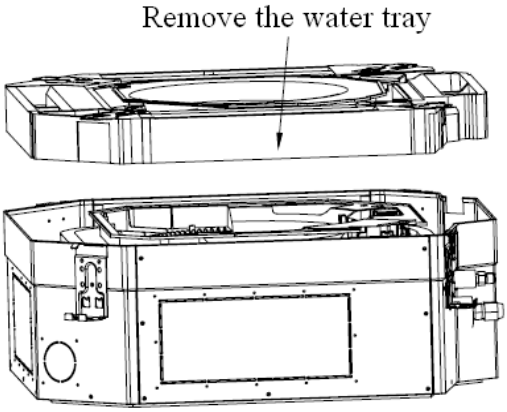	Remove the water tray
3.Unscrew the fixed bolts of the fan	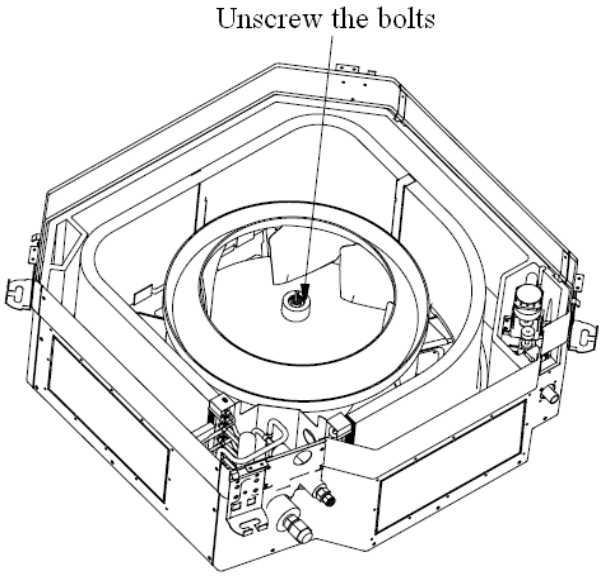	Unscrew the fixed bolts of the fan with the spanner

4.Remove the fan	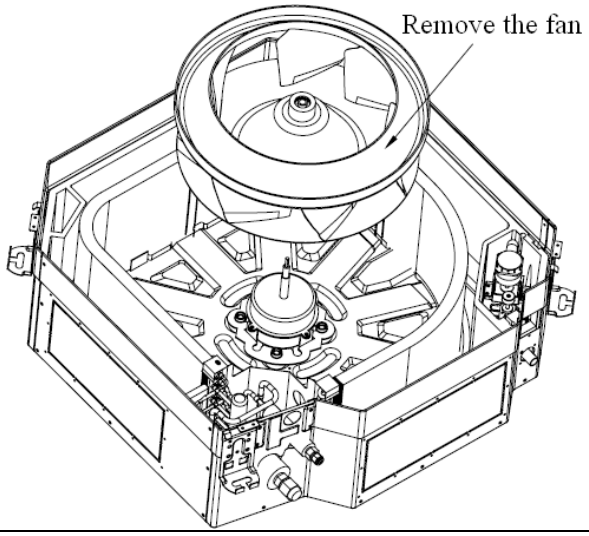	Remove the fan
5.Loosen the fixed bolts of the fan motor	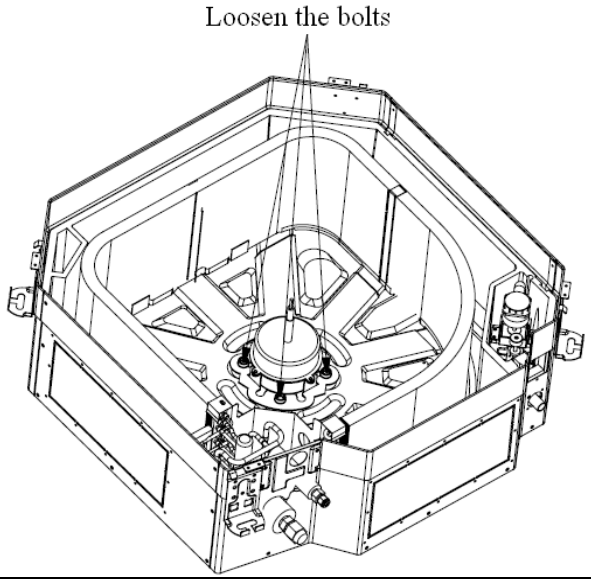	Loosen the fixed bolts of the fan motor
6.Remove the motor and replace it	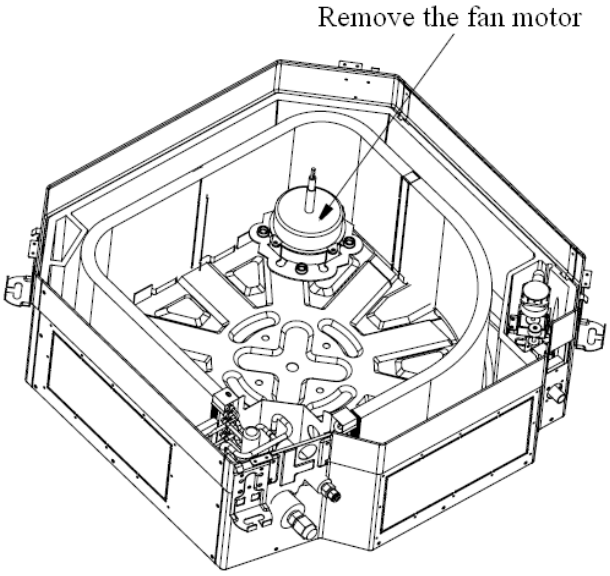	Remove the motor and replace it

7.Screw the fixed bolts of the motor	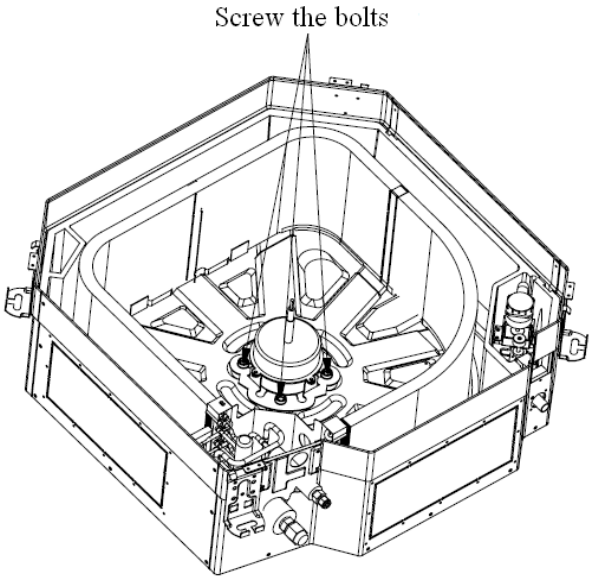	Screw the fixed bolts of the motor
8.Mount the fan and screw the fixing bolts	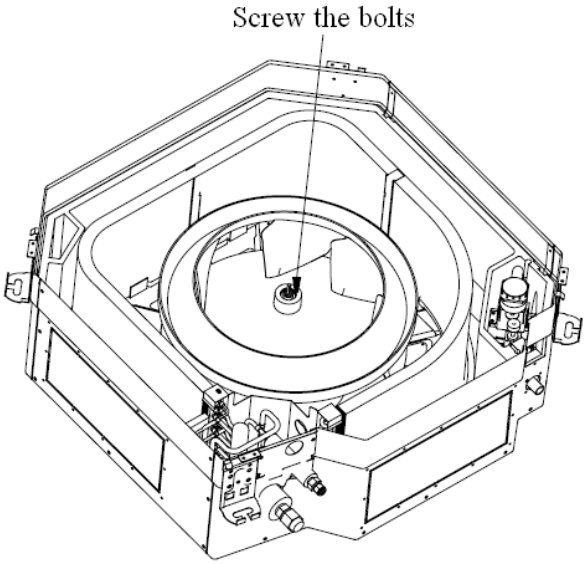	Mount the fan and screw the fixing bolts
9.Mount the water tray and screw the screws	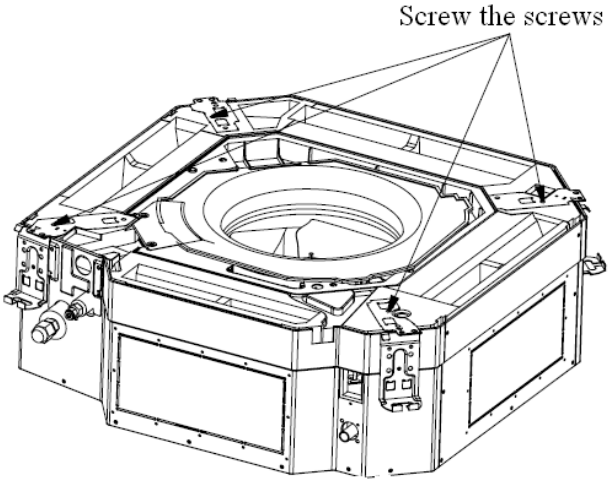	Mount the water tray and screw the screws

◆ Removal and Assembly of drainage pump

Remark: Prior to the assembly of the drainage pump, make sure the power supply is cut off.

Steps	Illustrations	Operation Instructions
1.Unscrew the fixed screws of the water tray	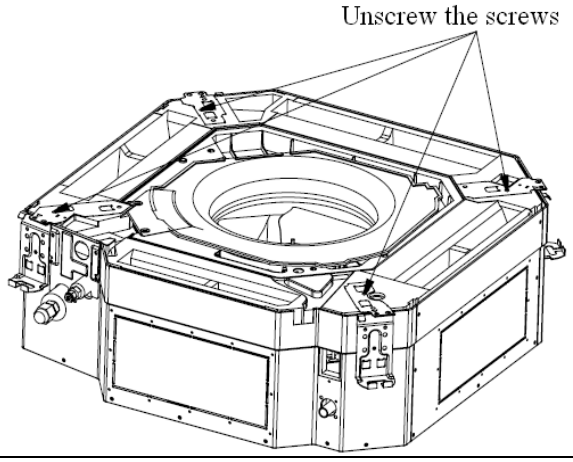	Unscrew the fixed screws of the water tray
2.Remove the water tray	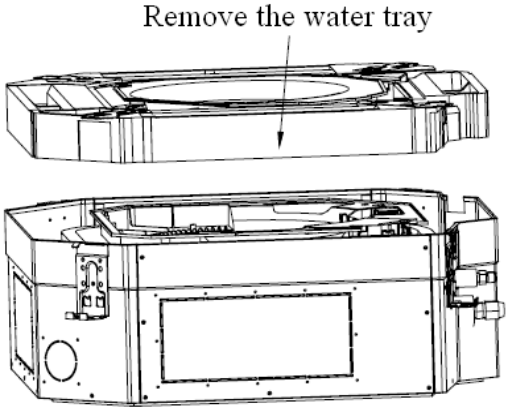	Remove the water tray
3. Pull out the drainage pipe and unscrew the fixed screws the water pump.	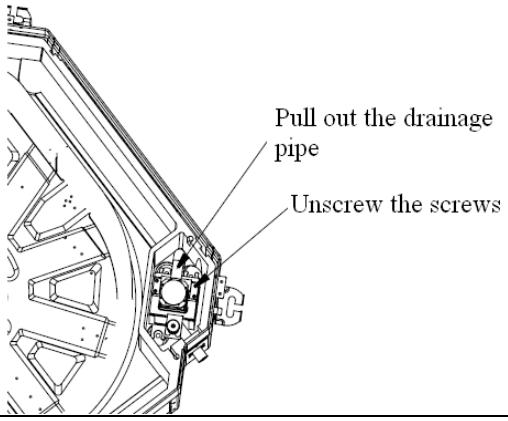	Pull out the drainage pipe and unscrew the fixed screws the water pump.
4.Take out the pump and replace it	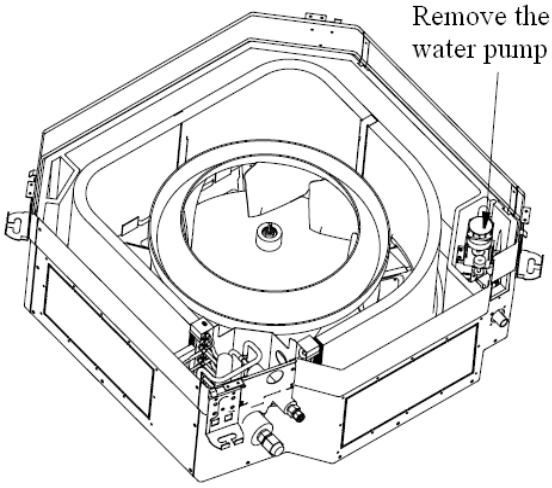	Take out the pump and replace it

5. Connect the drainage pipe and screw the fixed screws the water pump.	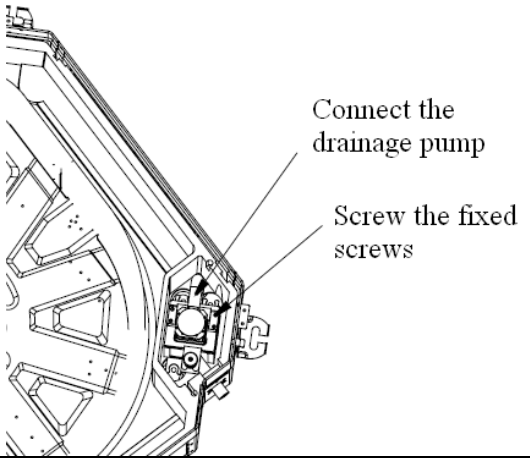	Connect the drainage pipe and screw the fixed screws the water pump.
6.Mount the water tray and tighten the screws	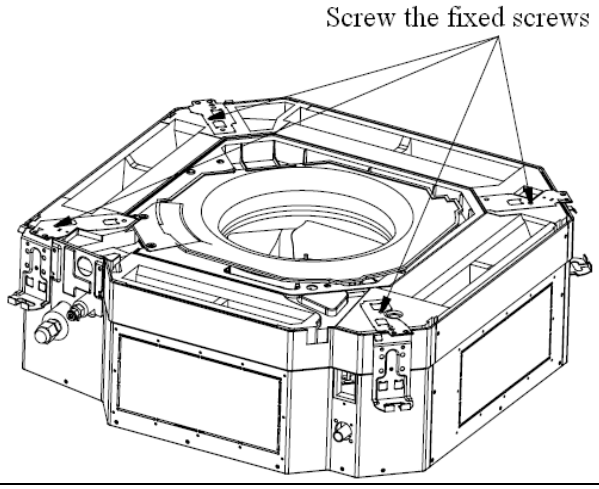	Mount the water tray and tighten the screws

6.2.5 Floor ceiling type

Remark: Prior to the assembly of the indoor unit, make sure the power supply is cut off.

◆ Removal panel grating module

Steps	Illustrations	Operation Instructions
Remove sub-assy of front grill	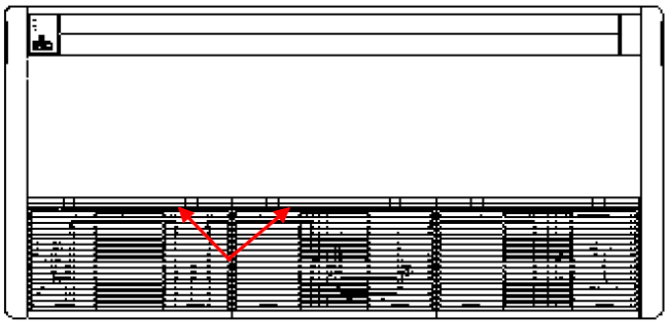	Move down the clip of the sub-assy of fromt grill until the front grill is open. (As is shown in the graph, arrow represents the position of bottons. There are two clips for each grating.)

◆ Remove right and left finishing plates

Steps	Illustrations	Operation Instructions
Remove right and left finishing plates	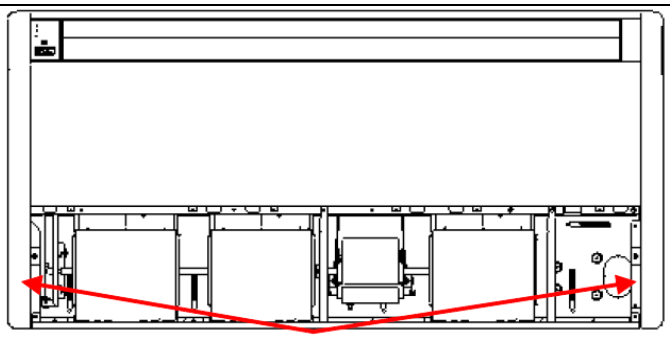	Remove the screws as shown in the graph with screwdriver and then push upward to remove the right and left finishing plates. (As is shown in the graph, arrow represents the position of screws.)

◆ Remove panel parts

Steps	Illustrations	Operation Instructions
Remove panel parts	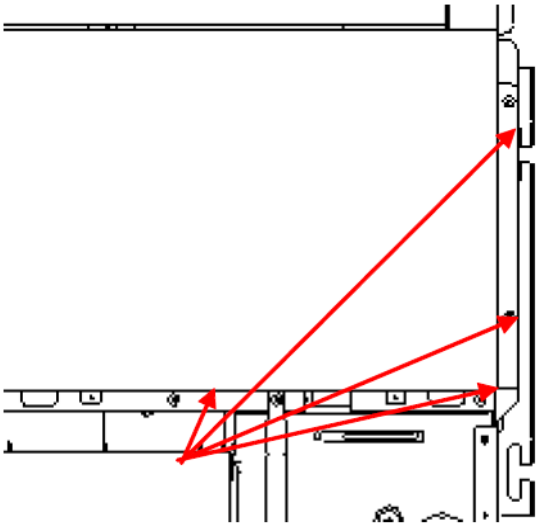	Remove the screws shown by the arrow in the graph with screwdriver (two on both right and left and 4 in the front) and then remove the panel parts.

◆ Remove sub-assy of electric box

Steps	Illustrations	Operation Instructions
Remove of electric box cover	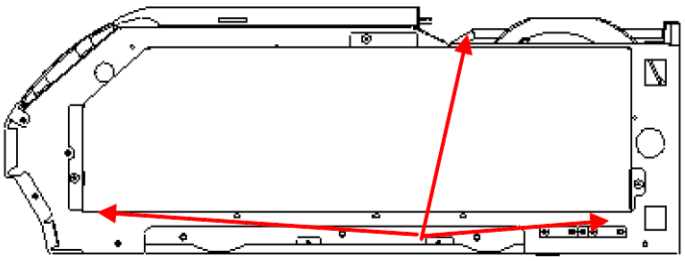	Remove 3 screws as shown by the arrow in the graph on left and remove the electric box cover.

◆ Remove air deflecting plate modules

Steps	Illustrations	Operation Instructions
Remove sub-assy of air deflecting plate	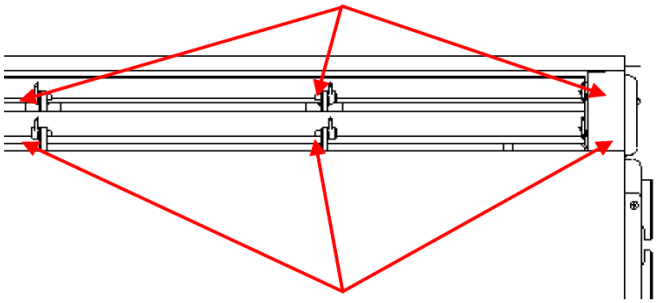	Remove the air deflecting plates from the air deflecting plate support assembly, and then remove both ends from the air sweeping motor. joint (As is shown in the graph, arrow represents the support assembly and circle the air sweeping motor joint.)

◆ Remove the water tray

Steps	Illustrations	Operation Instructions
Remove the water tray	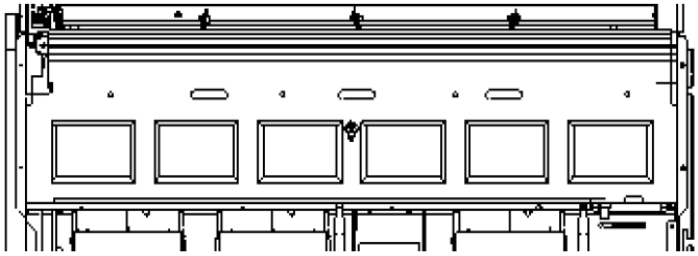	Remove the water tray

◆ Remove the evaporator

Steps	Illustrations	Operation Instructions
Remove the evaporator	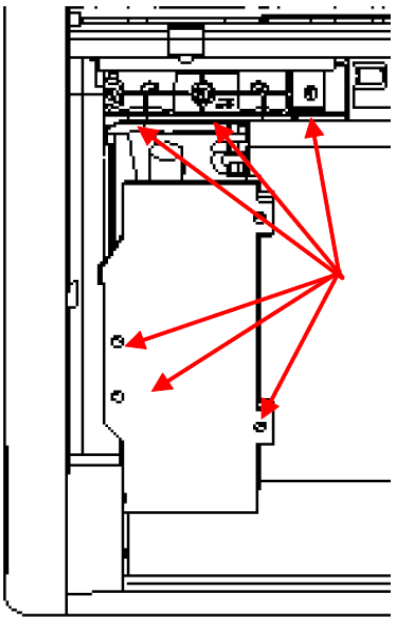	Remove the screws as shown by the arrow in the graph (There are 6 screws on left and right of the evaporator and 5 on evaporator outlet press plate modules)

◆ Remove fixing plate sub-assy for air sweeping fans

Steps	Illustrations	Operation Instructions
Remove fixing plate sub-assy for air sweeping fans	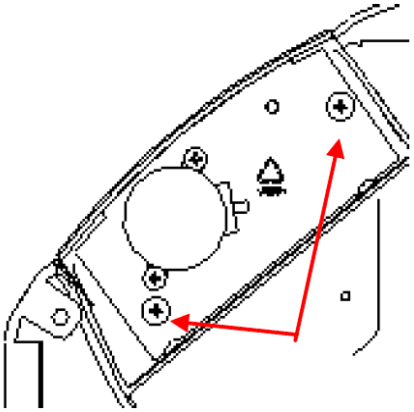	Remove the screws shown in the graph

◆ Remove fan and motor components

Steps	Illustrations	Operation Instructions
1. Remove front and back scroll cases	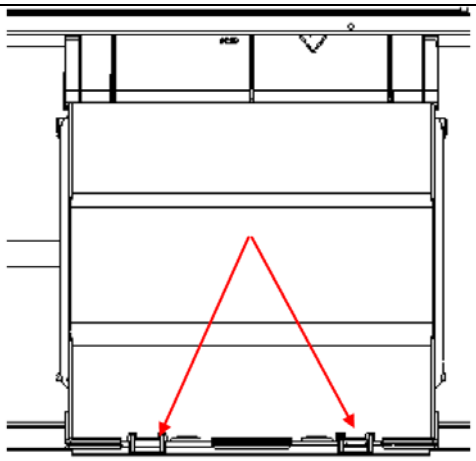	Press the buckle at the joints of front and back scroll cases with hands and pull upward to remove the front scroll case. Then remove the screws on the back scroll case. Lift the buckle of back scroll case with hands and remove it.(As is shown in the graph, circle represents 2 screws on left and right.)
2.Remove fans	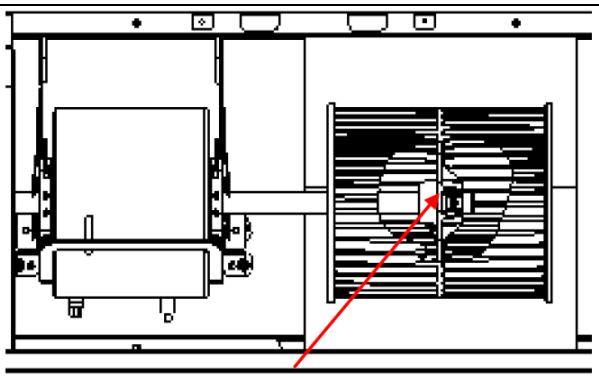	Remove the fixed screws of fan wheel with inner hexagonal and remove the wheel. The inner hexagonal and its direction of effect are shown by the arrow in the graph.
3. Remove bearing fixing plates	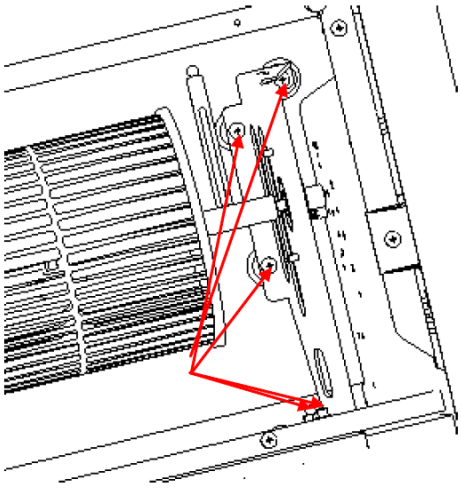	Remove 4 screws on the bearing fixing plates with screwdriver. (As shown in the box in the graph)

7 EXPLODED VIEWS AND PART LIST

7.1 Outdoor unit

GWHD(42S)NK3CO; GWHD(48S)NK3CO; GWHD(56S)NK3CO

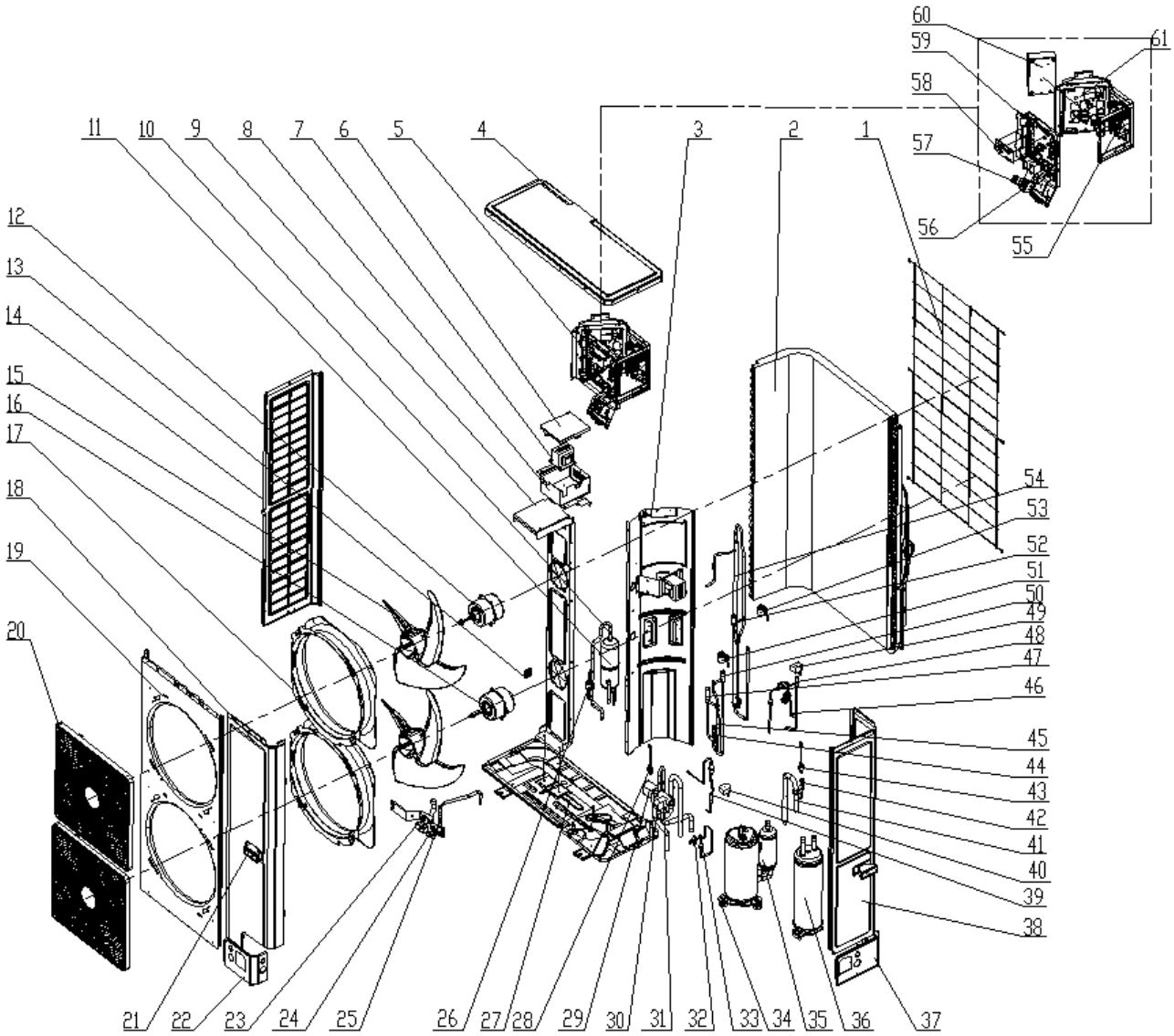

Part list:

No.	Description	GWHD(42S)NK3CO		GWHD(48S)NK3CO		GWHD(56S)NK3CO	
		Code	Qty	Code	Qty	Code	Qty
1	Rear Grill	01574100004	1	01574100004	1	01574100004	1
2	Condenser Assy	01124100088	1	01124100088	1	01124100088	1
3	Clap board	01244100005	1	01244100005	1	01244100005	1
4	Coping Plate	01264100008P	1	01264100008P	1	01264100008P	1
5	Electrical Box	01395200249	1	01395200250	1	01395200251	1
6	Reactor Box Cover	01424100030	1	01424100030	1	01424100030	1
7	Reactor	43138004	2	43138004	2	43138004	2
8	Reactor Box	01394100064	1	01394100064	1	01394100064	1
9	Motor Support Sub-assy	01804100178	1	01804100178	1	01804100178	1
10	Discharge Tube Sub-assy	04534100021	1	04534100021	1	04534100021	1
11	Oil Separator	07424105	1	07424105	1	07424105	1
12	Fan Motor	15704115	1	15704115	1	15704115	1
13	Temperature Sensor Sub-assy	39008252G	1	39008252G	1	39008252G	1
14	Left Side Plate	01314100013P	1	01314100013P	1	01314100013P	1
15	Axial Flow Fan Blade	10434100003	2	10434100003	2	10434100003	2
16	Fan Motor	1570411501	1	1570411501	1	1570411501	1
17	Diversion Circle	10474100001	2	10474100001	2	10474100001	2
18	Front Side Plate	01314100012P	1	01314100012P	1	01314100012P	1
19	Outer Case	01514100002P	1	01514100002P	1	01514100002P	1
20	Front Grill	01575200001	2	01575200001	2	01575200001	2
21	Handle	26904100016	2	26904100016	2	26904100016	2
22	Front Connection Board	01344100002P	1	01344100002P	1	01344100002P	1
23	Gas Stop Valve	07334100016	1	07334100016	1	07334100016	1
24	Liquid Stop Valve	07330000002	1	07330000002	1	07330000002	1
25	Filter	07212001	1	07212001	1	07212001	1
26	Protect Switch	4602000902	1	4602000902	1	4602000902	1
27	Chassis Sub-assy	0119410000301P	1	0119410000301P	1	0119410000301P	1
28	High pressure sensor	322101032	1	322101032	1	322101032	1
29	4-way Valve	43000338	1	43000338	1	43000338	1
30	4-Way Valve assy	04044100029	1	04044100029	1	04044100029	1
31	Magnet Coil	4300040029	1	4300040029	1	4300040029	1
32	Nozzle for Adding Freon	06135201	1	06135201	1	06135201	1
33	Filter	07210022	2	07210022	2	07210022	2
34	Compressor Gasket	76710247	3	76710247	3	76710247	3
35	Compressor	00204100001_G	1	00204100001_G	1	00204100001_G	1
36	Gas-liquid Separator	07424100014	1	07424100014	1	07424100014	1
37	Right Connection Board	01344100003P	1	01344100003P	1	01344100003P	1
38	Rear Side Plate	01314100014P	1	01314100014P	1	01314100014P	1
39	Gas By-pass Sub-assy	07334100018	1	07334100018	1	07334100018	1
40	Magnet Coil	4304000405	1	4304000405	1	4304000405	1
41	Suction Tube Sub-assy	04574100011	1	04574100011	1	04574100011	1
42	Nozzle for Adding Freon	06120012	2	06120012	2	06120012	2

43	Low pressure sensor	322101001	1	322101001	1	322101001	1
44	Electronic Expansion Valve Sub-assy	43044100022	1	43044100022	1	43044100022	1
45	Check Valve	07130101	1	07130101	1	07130101	1
46	Capillary Sub-assy (oil returning)	04004100011	1	04004100011	1	04004100011	1
47	Pressure regulating valve	07334100002	1	07334100002	1	07334100002	1
48	Electromagnetic Valve	43000054	1	43000054	1	43000054	1
49	Magnet Coil	4304000415	1	4304000415	1	4304000415	1
50	Electronic Expansion Valve	07334412	1	07334412	1	07334412	1
51	Electronic Expansion Valve Coil	4304413205	1	4304413205	1	4304413205	1
52	Electronic Expansion Valve	43042800005	1	43042800005	1	43042800005	1
53	Electronic Expansion Valve Coil	4304413208	1	4304413208	1	4304413208	1
54	Sub-cool Copper Assy	04534100044	1	04534100044	1	04534100044	1
55	Filter Board	30228000016	1	30228000016	1	30228000016	1
56	Terminal Board	420111451	1	420111451	1	420111451	1
57	Terminal Board	42011154	1	42011154	1	42011154	1
58	Testing Board	30118000003	1	30118000003	1	30118000003	1
59	Main Board	30226000038	1	30226000044	1	30226000036	1
60	Radiator	49018000010	1	49018000010	1	49018000010	1
61	Driving Board	30118000004	1	30118000004	1	30118000004	1

7.2 Indoor unit

7.2.1 Wall mounted type

◆ **Hansol**

GWH(07)TA-K3DNA1E/I;GWH(09)TA-K3DNA1E/I; GWH(12)TB-K3DNA1E/I; GWH(18)TC-K3DNA1E/I

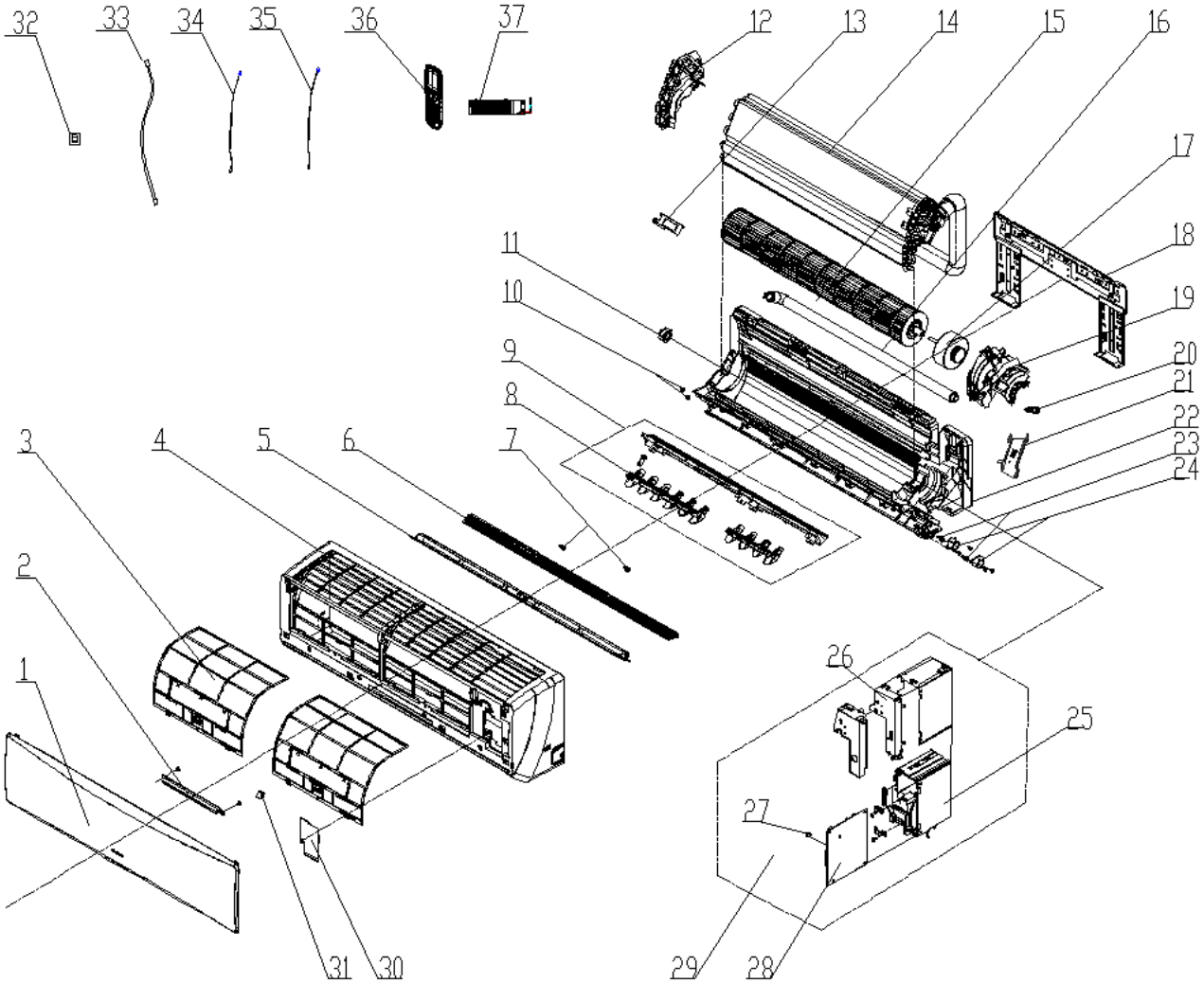

Part list: GWH(07)TA-K3DNA1E/I for CB148N05201; GWH(09)TA-K3DNA1E/I for CB148N05301
GWH(12)TB-K3DNA1E/I for CB148N05401; GWH(18)TC-K3DNA1E/I for CB148N05501

NO.	Description	GWH(07)TA-K3DNA1E/I GWH(09)TA-K3DNA1E/I		GWH(12)TB-K3DNA1E/I		GWH(18)TC-K3DNA1E/I	
		Code	Qty	Code	Qty	Code	Qty
1	Front Panel	20012853	1	20012849	1	20012820U	1
2	Display Board	30565140	1	30565140	1	30565141	1
3	Filter Sub-Assy	11122117	2	1112211602	2	1112209105	1
4	Front Case Sub-assy	20022003	1	2001288901	1	20012821	1
5	Guide Louver	10512712	1	10512147	1	10512225	1
6	Guide Louver (small)	10512176	1	10512127	1	1051222601	1
7	Crank	10582070	2	10582070	2	10582070	2
8	Air Louver	10512234(left) 10512235(Right)	1	10512232(left) 10512233(Right)	1	1051228601	3
9	Helicoid Tongue sub-assy	2611226001	1	2611224401	1	2611236701	1

10	Left Axile Bush	10512037	2	10512037	2	1051203701	2
11	Propeller Axile Bush	1054202101	1	1054202101	1	1054204701	1
12	Evaporator Support	24212114	1	24212114	1	24212139	1
13	Cold Plasma Generator	1114001602	1	1114001602	1	1114001601	1
14	Evaporator Assy	0100233801	1	0100294502	1	0100238601	1
15	Cross Flow Fan	10352038	1	10352033	1	10352045	1
16	Drainage Hose	0523001408	1	05230014	1	0523001406	1
17	Brushless DC Motor	15012510	1	15012510	1	15012127	1
18	Wall Mounting Frame	01252484	1	01252484	1	01252123	1
19	Motor Press Plate	26112209	1	26112209	1	26112330	1
20	Rubber Plug (Water Tray)	76712012	1	76712012	1	76712012	1
21	Pipe Clamp	2611216402	1	2611216402	1	26112188	1
22	Rear Case assy	2220217101	1	2220216104	1	22202361	1
23	Axile Bush	10542036	3	10542036	3	10542036	4
24	Step Motor	15212123	3	15212123	3	1501208602	3
25	Electric Box	2011218101	1	2011218104	1	2011218101	1
26	Electric Box Cover	2012240901	1	2012240901	1	2012240901	1
27	Jumper	4202300101	1	4202300103	1	4202300111	1
28	Main Board	30148884	1	30148884	1	30148885	1
29	Electric Box Assy	20402558	1	20402560	1	20402559	1
30	Electric Box Cover2	20122075	1	20122075	1	20122142	1
31	Screw Cover	24252016	1	24252016	3	24252016	3
32	Pipe Connection Nut accessories	06320020	1	06320020	1	06320020	1
33	Connecting Cable	4002052317	0	4002052317	0	4002052317	0
34	Temperature Sensor	390000598	1	390000598	1	390000598	1
35	Ambient Temperature Sensor	390000451	1	390000451	1	390000451	1
36	Remote Controller	30510137	1	30510137	1	30510137	1
37	Electrostatic Duster	11012027	1	11012027	1	11012027	1

◆ **U-Cool**

GWH(07)UA-K3DNA1B/I; GWH(09)UA-K3DNA1B/I; GWH(12)UB-K3DNA1B/I;

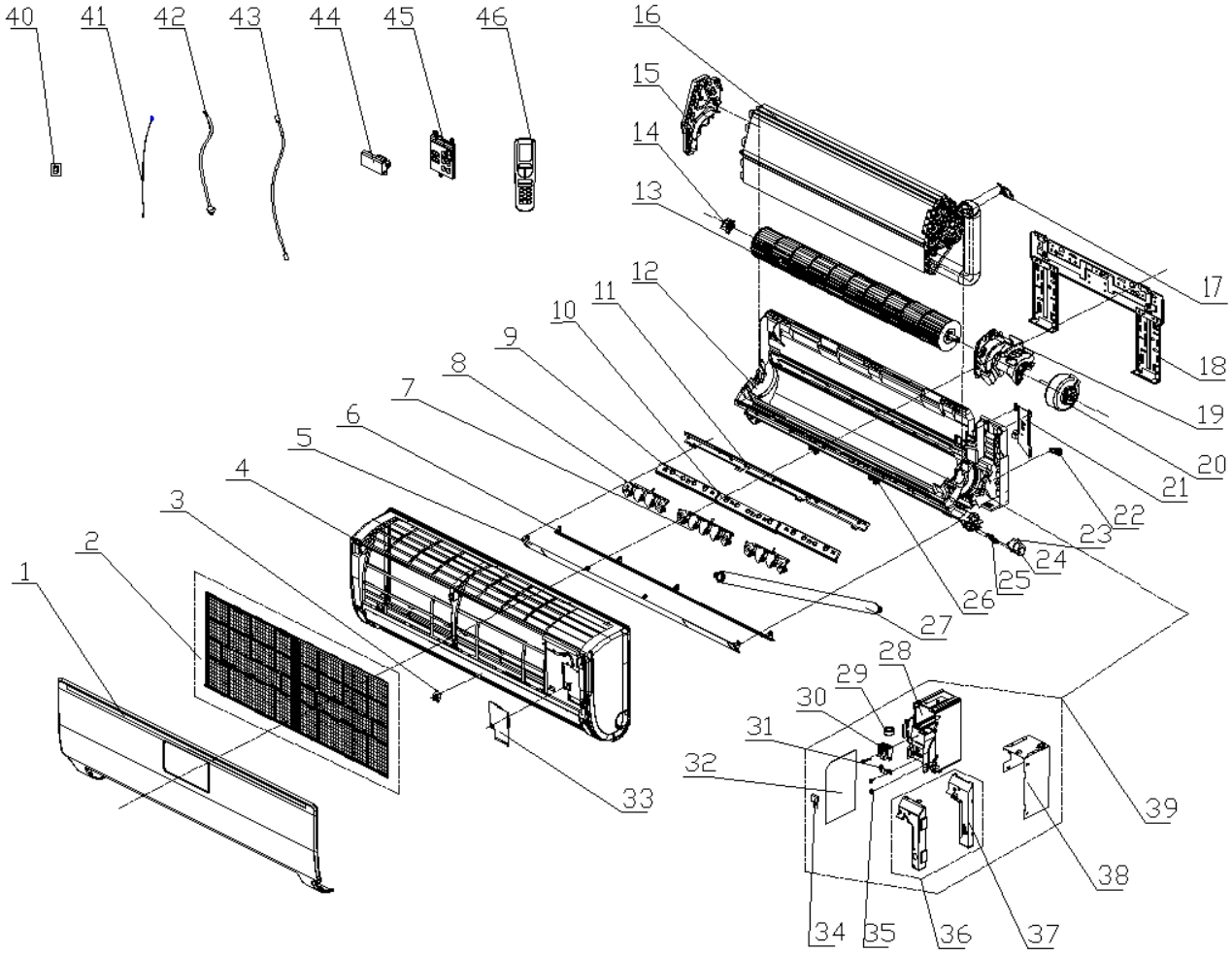

Part list:

GWH(07)UA-K3DNA1B/I for CB204N02600; GWH(09)UA-K3DNA1B/I for CB204N02700; GWH(12)UB-K3DNA1B/I for CB204N02800

No.	Description	GWH(07)UA-K3DNA1B/I GWH(09)UA-K3DNA1B/I		GWH(12)UB-K3DNA1B/I	
		Code	Qty	Code	Qty
1	Front Panel Sub-Assy	2001269506	1	2001285901	1
2	Filter Sub-Assy	11122122	2	11122134	2
3	Screw Cover	24252024	1	24252024	1
4	Front Case Sub-assy	20022424	1	2001272701	1
5	Guide Louver 1	10512218	1	10512214	1
6	Guide Louver 2	10512219	1	10512215	1
7	Air Louver 2	10512439	1	10512185	1
8	Air Louver 1	10512438	2	10512184	2
9	Louver Clamp 1	26112492	1	26112263	1
10	Louver Clamp 2	26112491	1	26112264	1
11	Helicoid Tongue	26112490	1	26112262	1
12	Rear Case Assy	22202488	1	22202220	1
13	Cross Flow Fan	10352047	1	10352041	1

14	Axile Bush Sub-assy	10542024	1	10542024	1
15	Evaporator Support	24212132	1	24212128	1
16	Evaporator Assy	0100263001	1	0100229401	1
17	Shield Board (Elbow)	01382010	1	01382010	1
18	Wall Mounting Frame	01252121	1	01252121	1
19	Motor Press Plate	26112270	1	26112261	1
20	Fan Motor	15012125	1	150120874	1
21	Pipe Clamp	26112164	1	26112164	1
22	Rubber Plug (Water Tray)	76712012	1	76712012	1
23	Step Motor	1521210804	1	1521210804	1
24	Step Motor	1521212201	1	1521212201	1
25	Crank	73012005	2	73012005	2
26	Shaft of Guide Louver	1054202001	6	1054202001	6
27	Drainage Hose	0523001407	1	05230014	1
28	Electric Box	20112121	1	20112121	1
29	Magnetic Ring	49010104	1	49010104	1
30	Terminal Board	420111041	1	420111041	1
31	Wire Clamp	71010103	1	71010103	1
32	Main Board	30148919	1	30148919	1
33	Electric Box Cover2	20122168	1	2012207507	1
34	Capacitor	33010002	1	33010002	1
35	Jumper	4202300102	1	4202300104	1
36	Upper Shield Cover Sub-assy of Electric Box	01592113	1	01592301	1
37	Electric Box Cover	2012213301	1	20122133	1
38	Lower Shield Sub-assy of Electric Box	01592300	1	01592300	1
39	Electric Box Assy	20102000073	1	20102000072	1
40	Pipe Connection Nut Accessories	06320005	1	06320020	1
41	Temperature Sensor	390000453	1	390000453	1
42	Temperature Sensor	390000592	1	390000592	1
43	Connecting Cable	4002052318	0	4002052318	0
44	Cold Plasma Generator	1114001603	1	1114001603	1
45	Display Board	30565133	1	30565133	1
46	Remote Controller	30510134	1	30510134	1

GWH(18)UC-K3DNA1B/I

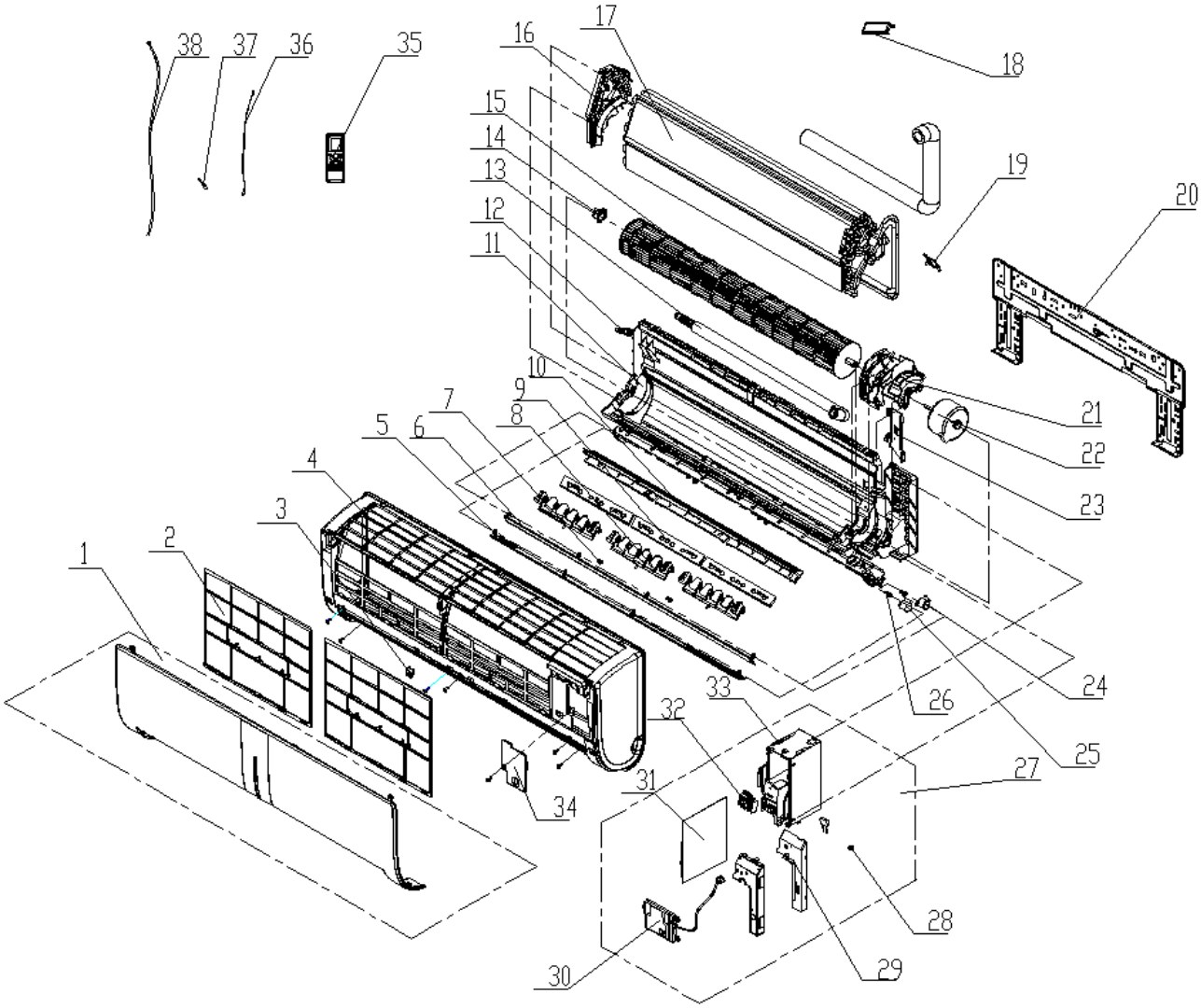

Part list:

GWH(18)UC-K3DNA1B/I for CB204N02900

NO.	Description	GWH(18)UC-K3DNA1B/I	
		Code	Qty
1	Front Panel Assy	2001280401	1
2	Filter Sub-Assy	11122133	2
3	Screw Cover	24252024	3
4	Front Case Sub-assy	2001280503	1
5	Guide Louver 2	10512223	1
6	Guide Louver 1	10512222	1
7	Shaft of guide louver	1054202001	6
8	Air Louver(Manual)	10512221	3
9	Louver Clamp	26112493	3
10	Helicoid Tongue	26112495	1
11	Rear Case assy	22202284	1
12	Rubber Plug (Water Tray)	76712012	1
13	Drainage hose	0523001406	1
14	Axile Bush sub-assy	10542024	1

15	Cross Flow Fan	10352030	1
16	Evaporator Support	24212135	1
17	Evaporator Assy	01002442	1
18	Cold Plasma Generator	1114001603	1
19	Shield board (elbow)	01382010	1
20	Wall Mounting Frame	01252032	1
21	Motor Press Plate	26112295	1
22	Fan Motor	1501209802	1
23	Connecting pipe clamp	26112164	1
24	Stepping Motor	15212125	1
25	Stepping Motor	15212126	1
26	Crank	73012005	2
27	Electric Box Assy	20102000071	1
28	Jumper	4202300111	1
29	Electric Box Cover	20122158	1
30	Display Board	30565134	1
31	Main Board	30148920	1
32	Terminal Board	420111041	1
33	Electric Box	20112134	1
34	Electric Box Cover2	20122159	1
35	Remote Controller	30510134	1
36	Temperature Sensor	390000453	1
37	Temperature Sensor	390000592	1
38	Connecting Cable	4002052318	0

◆ **Cozy**

GWH(07)MA-K3DNA3E/I; GWH(09)MA-K3DNA3E/I; GWH(12)MB-K3DNA3E/I

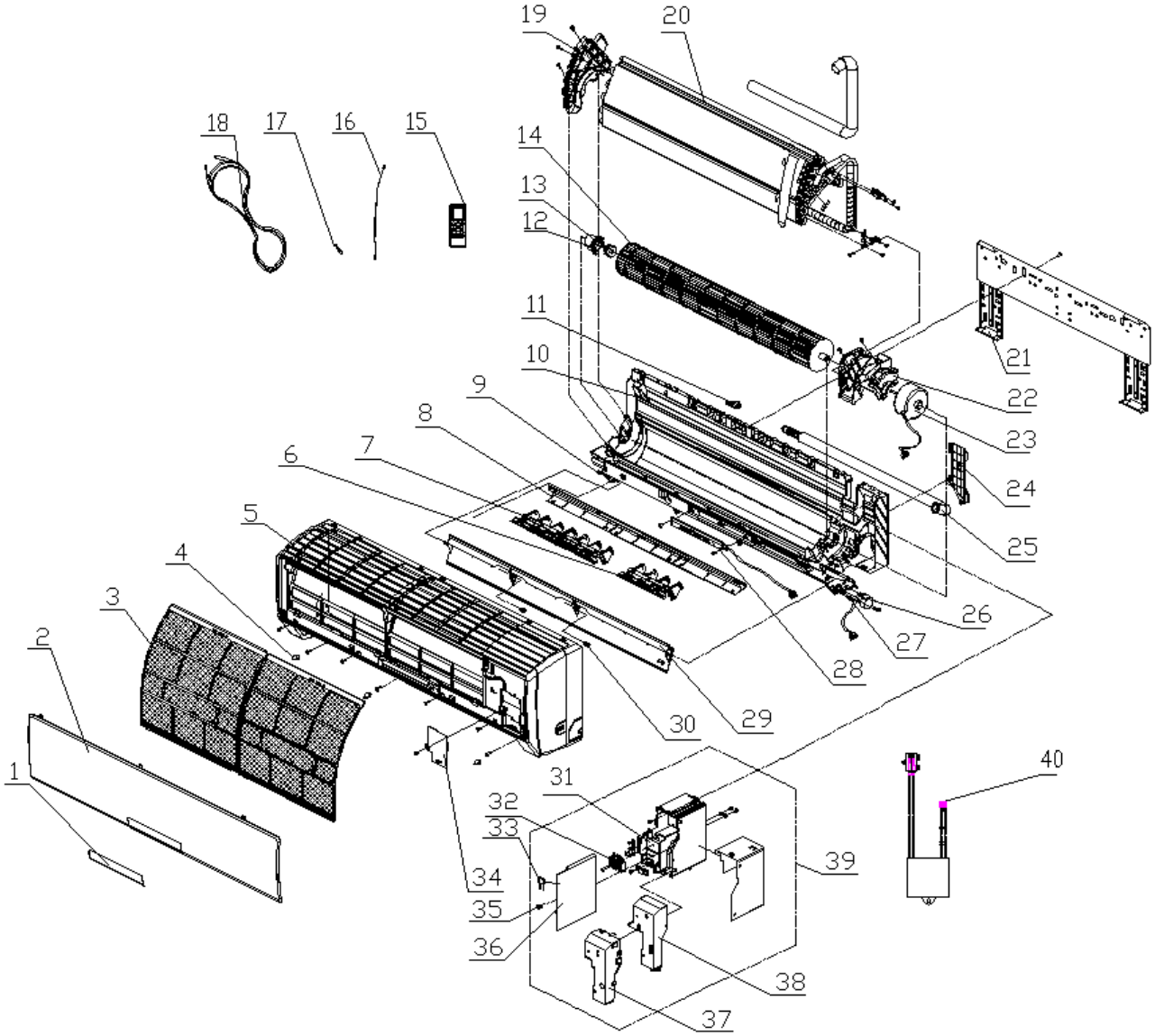

Part list:

GWH(07)MA-K3DNA3E/I for CB171N08600; GWH(09)MA-K3DNA3E/I for CB171N08501; GWH(12)MB-K3DNA3E/I for CB171N08701

NO.	Description	GWH(07)MA-K3DNA3E/I GWH(09)MA-K3DNA3E/I		GWH(12)MB-K3DNA3E/I	
		Code	Qty	Code	Qty
1	Receiver Window	20192229	1	22432230	1
2	Front Panel Assy	20012241	1	20012548	1
3	Filter Sub-Assy	11122081	2	1112220403	2
4	Screw Cover	24252016	3	24252016	1
5	Front Case	20012120C	1	2001213908	1
6	Air Louver 2	10512114	1	10512155	1
7	Air Louver 1	10512113	1	10512156	1
8	Helicoid tongue	26112162	1	26112163	1
9	(Left) Axile Bush	10542704	1	10542037	1

10	Rear Case assy	2220210111	1	2220210301	1
11	Rubber Plug (Water Tray)	76712012	1	76712012	1
12	Ring of Bearing	26152022	1	26152022	1
13	O-Gasket sub-assy of Bearing	7651205102	1	7651205102	1
14	Cross Flow Fan	10352018	1	10352017	1
15	Remote Controller	305100491	1	305100491	1
16	Temperature Sensor	390000599	1	390000599	1
17	Ambient Temperature Sensor	390000453	1	'390000453	1
18	Connecting Cable	4002052317	0	4002052317	0
19	Evaporator Support	24212090	1	24212091	1
20	Evaporator Assy	0100274301	1	0100274401	1
21	Wall Mounting Frame	01252015	1	01252021	1
22	Motor Press Plate	26112160	1	26112161	1
23	Fan Motor	15012115	1	1501208904	1
24	Pipe Clamp	26112164	1	26112164	1
25	Drainage hose	0523001406	1	0523001401	1
26	Step Motor	1521212901	1	1521212901	1
27	Crank	10582070	1	10582070	1
28	Display Board	30565007	1	30565007	1
29	Guide Louver	10512111	1	10512157	1
30	Axile Bush	10542036	1	10542036	1
31	Electric Box	2011216701	1	2011216701	1
32	Terminal Board	42011233	1	42011233	1
33	Capacitor CBB61	33010002	1	33010002	1
34	Electric Box Cover 2	20122075	1	20122075	1
35	Jumper	4202300101	1	4202300104	1
36	Main Board	30148874	1	30148874	1
37	Shield cover of Electric Box Sub-assy	0159207301	1	0159207301	1
38	Electric Box Cover 1	22242135	1	22242135	1
39	Electric Box Assy	20402999	1	20403018	1
40	Cold plasma generator	1114001602	1	1114001602	1

GWH(18)MC-K3DNA3E/I

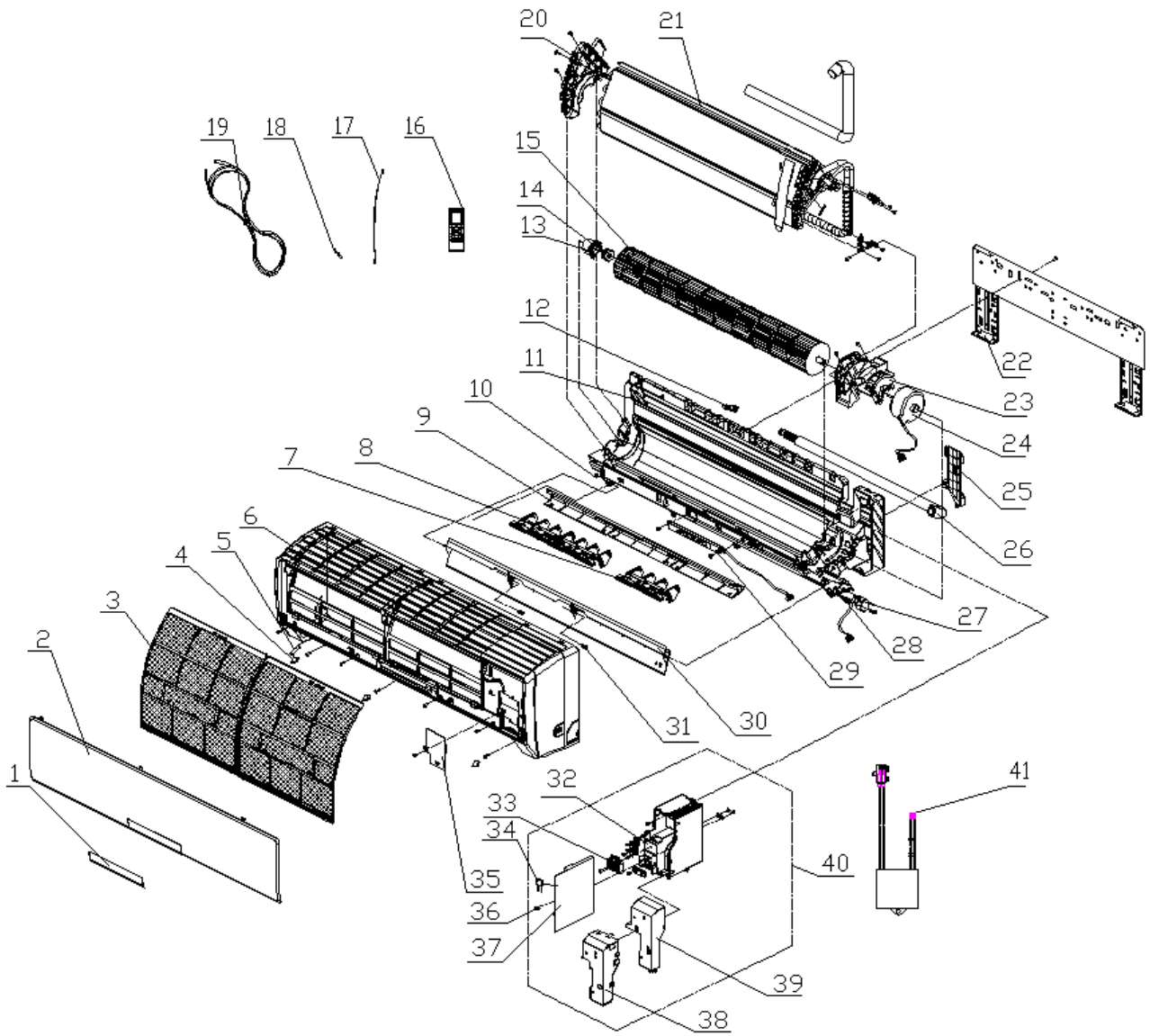

Part list:

GWH(18)MC-K3DNA3E/I for CB171N08401

NO.	Description	GWH(18)MC-K3DNA3E/I	
		Code	Qty
1	Receiver Window	22432173	1
2	Front Panel Assy	20012260	1
3	Filter Sub-Assy	1112208901	2
4	Screw Cover	24252016	3
5	Baffle Plate	26112228	1
6	Front Case Sub-Assy	20022172	1
7	Air Louver 2	10512117	1
8	Air Louver 1	10512116	1
9	Helicoid tongue	26112238	1
10	Left Axile Bush	10512037	1
11	Rear Case assy	12312214	1
12	Rubber Plug (Water Tray)	76712012	1

13	Ring of Bearing	26152022	1
14	O-Gasket sub-assy of Bearing	7651205102	1
15	Cross Flow Fan	10352019	1
16	Remote Controller	305100491	1
17	Temperature Sensor	390000599	1
17	Ambient Temperature Sensor	390000453	1
19	Connecting Cable	4002052317	0
20	Evaporator Support	24212133	1
21	Evaporator Assy	01002774	1
22	Wall Mounting Frame	01252218	1
23	Motor Press Plate	26112494	1
24	Fan Motor	15012146	1
25	Pipe Clamp	26112164	1
26	Drainage hose	05230014	1
27	Step Motor	15012086	1
28	Crank	10582070	1
29	Display Board	30565038	1
30	Guide Louver	10512115	1
31	Axile Bush	10542036	1
32	Electric Box	2011210801	1
33	Terminal Board	42011233	1
34	Capacitor CBB61	33010043	1
35	Electric Box Cover2	20112081	1
36	Jumper	4202300108	1
37	Main Board	30148877	1
38	Shield cover of Electric Box	01592092	1
39	Electric Box Cover1	20122154	1
40	Electric Box Assy	20402962	1
41	Cold plasma generator	1114001602	1

◆ **Change**

GWH(07)KF-K3DNA6E/I;GWH(09)KF-K3DNA6E/I;GWH(12)KF-K3DNA6E/I; WH(18)KG-K3DNA6E/I

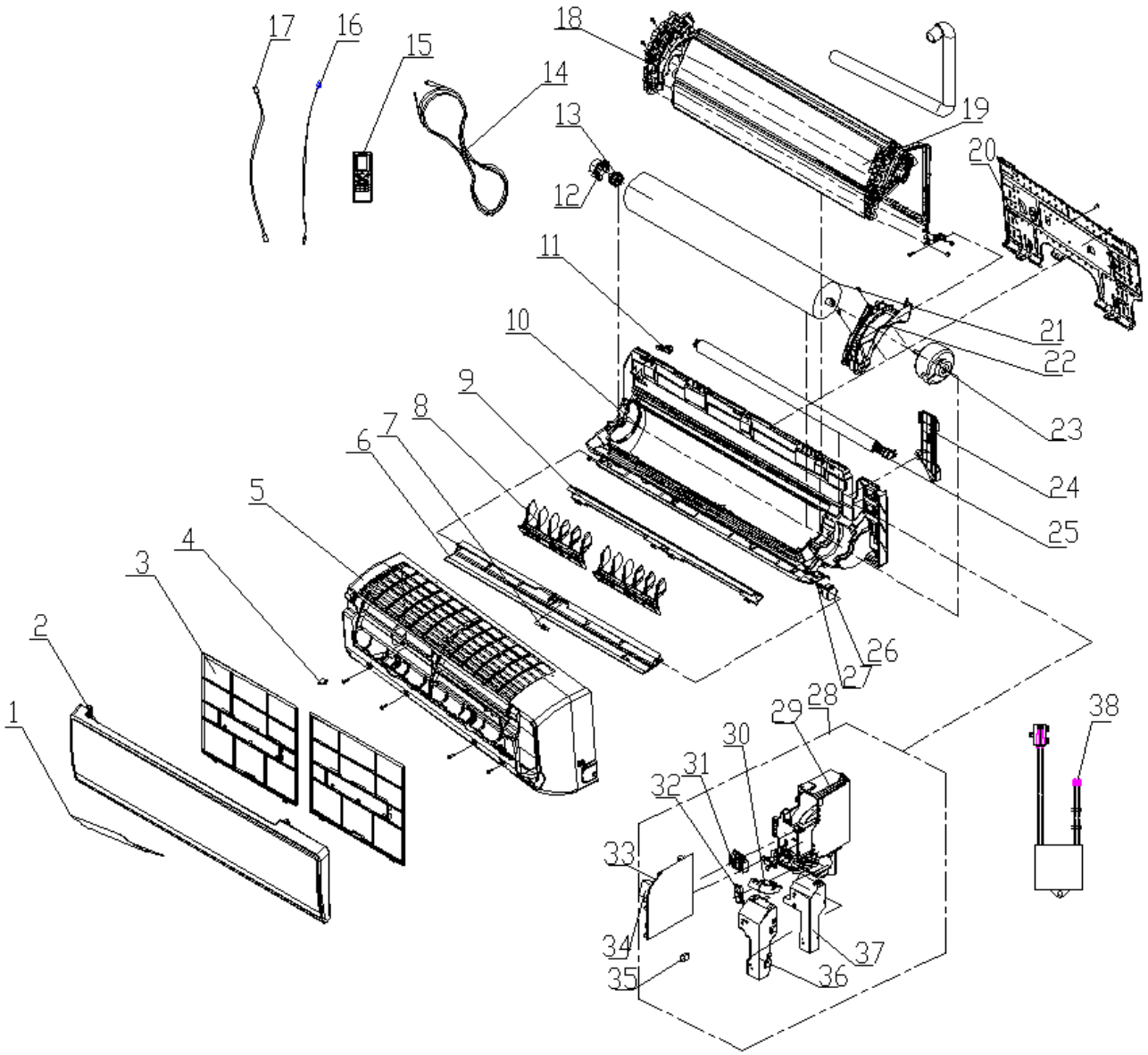

Part list:

GWH(07)KF-K3DNA6E/I for CB146N26201; GWH(09)KF-K3DNA6E/I for CB146N26301; GWH(12)KF-K3DNA6E/I for CB146N26401; GWH(18)KG-K3DNA6E/I for CB146N26501

NO.	Description	GWH(07)KF-K3DNA6E/I GWH(09)KF-K3DNA6E/I		GWH(12)KF-K3DNA6E/I		GWH(18)KG-K3DNA6E/I	
		Code	Qty	Code	Qty	Code	Qty
1	Membrane	63062017	1	63062017	1	63062022	1
2	Front Panel Assy	20012443S	1	20012443S	1	20012495S	1
3	Filter Sub-Assy	1112208201	2	1112208201	2	11122104	2
4	Screw Cover	24252019	1	24252019	1	242520041	1
5	Front Case Assy	2001237501	1	2001237501	1	20012497	1

6	Guide Louver	10512119	1	10512119	1	10512140	1
7	Shaft of guide louver	1054202001	1	1054202001	1	10512037	1
8	Air Louver	10512160	2	10512160	2	10512160	2
9	Helicoid tongue	26112486	1	26112486	1	26112232	1
10	Rear Case assy	2220229501	1	2220229501	1	22202154	1
11	Pipe plug (outlet)	76712020	1	76712020	1	76712012	1
12	Axile Bush sub-assy	10542024	1	10542024	1	10542047	1
13	Damping washer sub-assy	76512011	1	76512011	1	/	0
14	Connecting Cable	400204056	0	400204056	0	4002052317	0
15	Remote Controller	305100611	1	305100611	1	305100611	1
16	Temperature Sensor	39000305	1	39000305	1	390000599	1
17	Ambient Temperature Sensor	390000453	1	390000453	1	390000453	1
18	Evaporator Support	24212108	1	24212108	1	24212119	1
19	Evaporator Assy	01002957	1	01002958	1	01002775	1
20	Wall Mounting Frame	0125201801	1	0125201801	1	01252484	1
21	Cross Flow Fan	10352423	1	10352423	1	10352036	1
22	Motor Press Plate	26112191	1	26112191	1	26112231	1
23	Fan Motor	15012141	1	15012141	1	15012146	1
24	Baffle Plate	26112218	1	26112218	1	2611216401	1
25	Drainage Pipe Sub-assy	0523204101	1	0523204101	1	0523001407	1
26	Step Motor	1521210701	1	1521210701	1	15012086	1
27	Crank	73012005	1	73012005	1	10582070	1
28	Electric Box Assy	20402550	1	20402549	1	20402552	1
29	Electric Box	20112086	1	20112086	1	20112103	1
30	Indicator Light Cover	22242084	1	22242084	1	22242084	1
31	Terminal Board	42011233	1	42011233	1	42011233	1
32	Indicator shield cover	22242083	1	22242083	1	22242083	1
33	Main Board	30148872	1	30148872	1	30148878	1
34	Capacitor CBB61	3301000213	1	3301000213	1	33010043	1
35	Jumper	4202300112	1	4202300114	1	4202300115	1
36	Electric Box Cover Sub-Assy	20122109	1	20122109	1	20122123	1
37	Electric Box Cover	20122106	1	20122106	1	20122142	1
38	Cold plasma generator	1114001602	1	1114001602	1	1114001602	1

◆ **Viola**

GWH(07)RA-K3DNA3E/I;GWH(09)RA-K3DNA3E/I;GWH(12)RB-K3DNA3E/I;GWH(18)RC-K3DNA3E/I

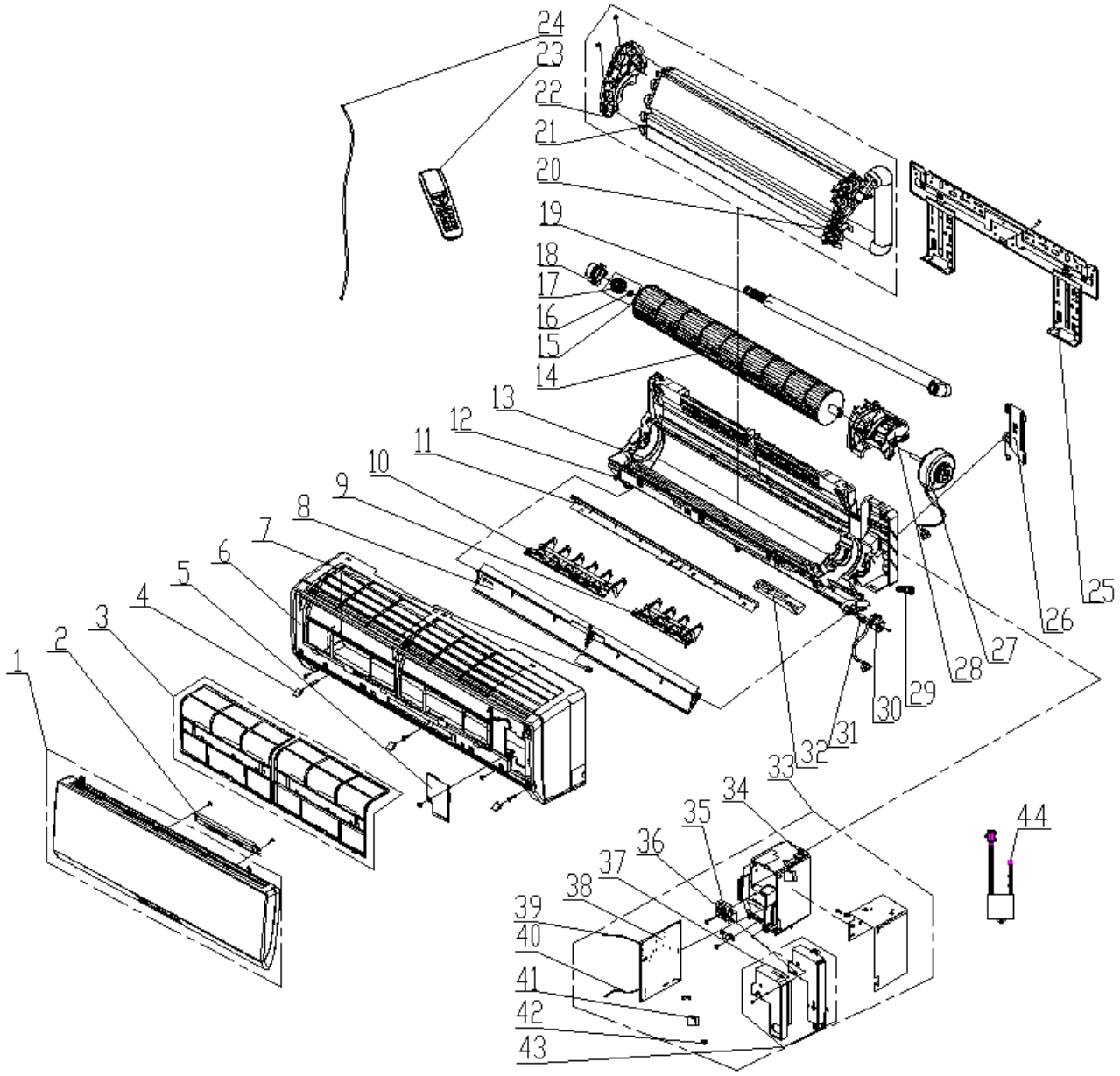

Part list:

GWH(07)RA-K3DNA3E/I for CB302N01501; GWH(09)RA-K3DNA3E/I for CB302N01601;
GWH(12)RB-K3DNA3E/I for CB302N01701; GWH(18)RC-K3DNA3E/I for CB302N01801

NO.	Description	GWH(07)RA-K3DNA3E/I GWH(09)RA-K3DNA3E/I		GWH(12)RB-K3DNA3E/I		GWH(18)RC-K3DNA3E/I	
		Code	Qty	Code	Qty	Code	Qty
1	Front Panel Assy	20012878	1	20012858	1	20012760	1
2	Display Board	30565137	1	30565137	1	30565121	1
3	Filter Sub-Assy	11122206	2	1112220403	2	1112208901	2
4	Screw Cover	24252016	3	24252016	3	24252016	3
5	Electric Box Cover 2	20122075	1	20122075	1	20122142	1
6	Front Case	20012672C	1	20012665C	1	20022403	1
7	(Left) Axile Bush	10542704	1	10512037	1	10512037	1

8	Guide Louver	10512204	1	10512203	1	10512205	1
9	Air Louver 1	1051211302	1	1051215603	1	1051211602	1
10	Air Louver 2	1051211402	1	1051215503	1	1051211702	1
11	Helicoid Tongue	2611216202	1	2611216302	1	2611223802	1
12	Axile Bush	10542036	1	10542036	1	10542036	1
13	Rear Case assy	22202186	1	22202467	1	22202193	1
14	Cross Flow Fan	10352018	1	10352017	1	10352019	1
15	O-Gasket assy of Bearing	7651205102	1	7651205102	1	7651205102	1
16	Fan Bearing	7651221001	1	7651221001	1	7651221001	1
17	O-Gasket of Cross Fan Bearing	76512203	1	76512203	1	76512203	1
18	Ring of Bearing	26152022	1	26152022	1	26152022	1
19	Drainage hose	'0523001406	1	‘0523001401	1	05230014	1
20	Temp. Sensor sleeving	05212423	1	05212423	1	05212423	1
21	Evaporator Assy	'0100274301	1	0100274401	1	01002773	1
22	Evaporator Support	24212090	1	24212091	1	24212133	1
23	Remote Controller	305100491	1	305100491	1	305100491	1
24	Connecting Cable	4002052317	0	4002052317	0	4002052317	0
25	Wall Mounting Frame	01252015	1	01252021	1	01252218	1
26	Pipe Clamp	2611216401	1	2611216401	1	2611216401	1
27	Fan Motor	15012115	1	150120874	1	15012146	1
28	Motor Press Plate	26112160	1	26112161	1	26112494	1
29	Rubber Plug (Water Tray)	76712012	1	76712012	1	76712012	1
30	Step Motor	1521212901	1	1521212901	1	15012086	1
31	Crank	10582070	1	10582070	1	10582070	1
32	Foam (Water tray)	12312163	1	12312167	1	12312215	1
33	Electric Box Assy	20402547	1	20402546	1	20402548	1
34	Electric Box	2011216701	1	2011216701	1	20112108	1
35	Terminal Board	42011233	1	42011233	1	42011233	1
36	Electric Box Cover 1	22242135	1	22242135	1	20122154	1
37	Shield cover of Electric Box	0141203601	1	0141203601	1	01592092	1
38	Main Board	30148883	1	30148883	1	30148879	1
39	Ambient Temperature Sensor	390000453	1	390000453	1	390000453	1
40	Temperature Sensor	390000591	1	390000591	1	390000591	1
41	Capacitor CBB61	33010002	1	33010002	1	33010043	1
42	Jumper	4202300117	1	4202300119	1	4202300121	1
43	Shield cover of Electric Box sub-assy	0159207301	1	0159207301	1	01592092	1
44	Cold plasma generator	1114001602	1	1114001602	1	1114001602	1

GWH(24)RC-K3DNA1A/I

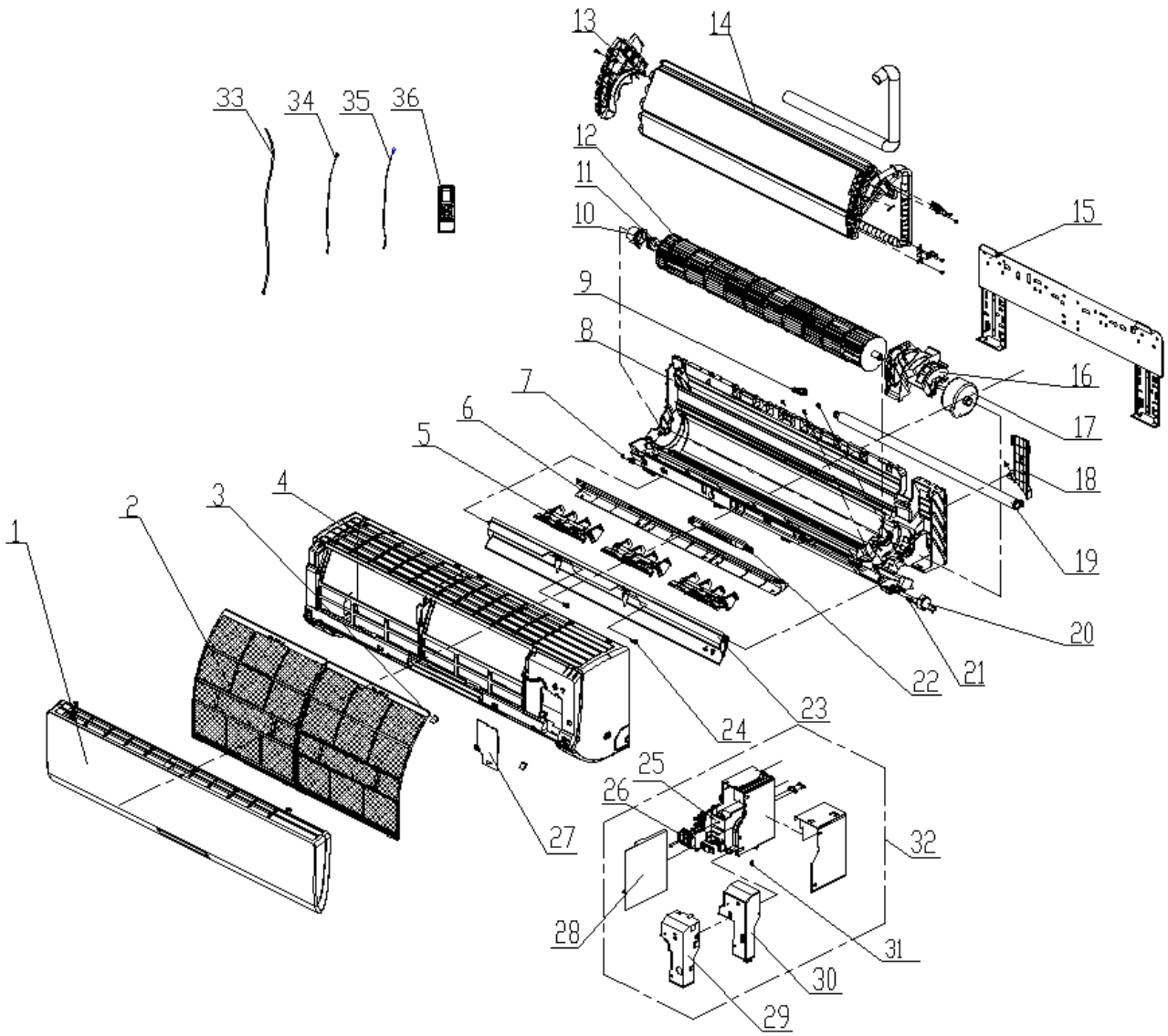

Part list:

GWH(24)RC-K3DNA1A/I for CB144N01100

NO.	Description	GWH(24)RC-K3DNA1A/I	
		Code	Qty
1	Front Panel Assy	20012734	1
2	Filter Sub-Assy	11122091	2
3	Screw Cover	24252016	3
4	Front Case	2001297002	1
5	Air Louver 1	1051215901	3
6	Helicoid Tongue	2611218702	1
7	Left Axile Bush	10512037	1
8	Rear Case assy	22202363	1
9	Rubber Plug (Water Tray)	76712012	1
10	Ring of Bearing	26152025	1
11	O-Gasket sub-assy of Bearing	7651205102	1
12	Cross Flow Fan	10352030	1
13	Evaporator Support	24212103	1

14	Evaporator Assy	01002437	1
15	Wall Mounting Frame	01252032	1
16	Motor Press Plate	26112316	1
17	Fan Motor	15012098	1
18	Pipe Clamp	2611218801	1
19	Drainage hose	0523001405	1
20	Step Motor	1521300101	1
21	Crank	10582070	1
22	Display Board	30565110	1
23	Guide Louver	10512208	1
24	Axile Bush	10542036	2
25	Electric Box	20112108	1
26	Terminal Board	42011233	1
27	Electric Box Cover2	20122142	1
28	Main Board	30148533	1
29	Shield cover of Electric Box	01592092	1
30	Electric Box Cover1	20122154	1
31	Jumper	4202300130	1
32	Electric Box Assy	20302994	1
33	Connecting Cable	400204056	0
34	Temperature Sensor	390000591	1
35	Ambient Temperature Sensor	390000453	1
36	Remote Controller	305100491	1

7.2.2 Duct type

GFH(09)EA-K3DNA1A/I; GFH(12)EA-K3DNA1A/I

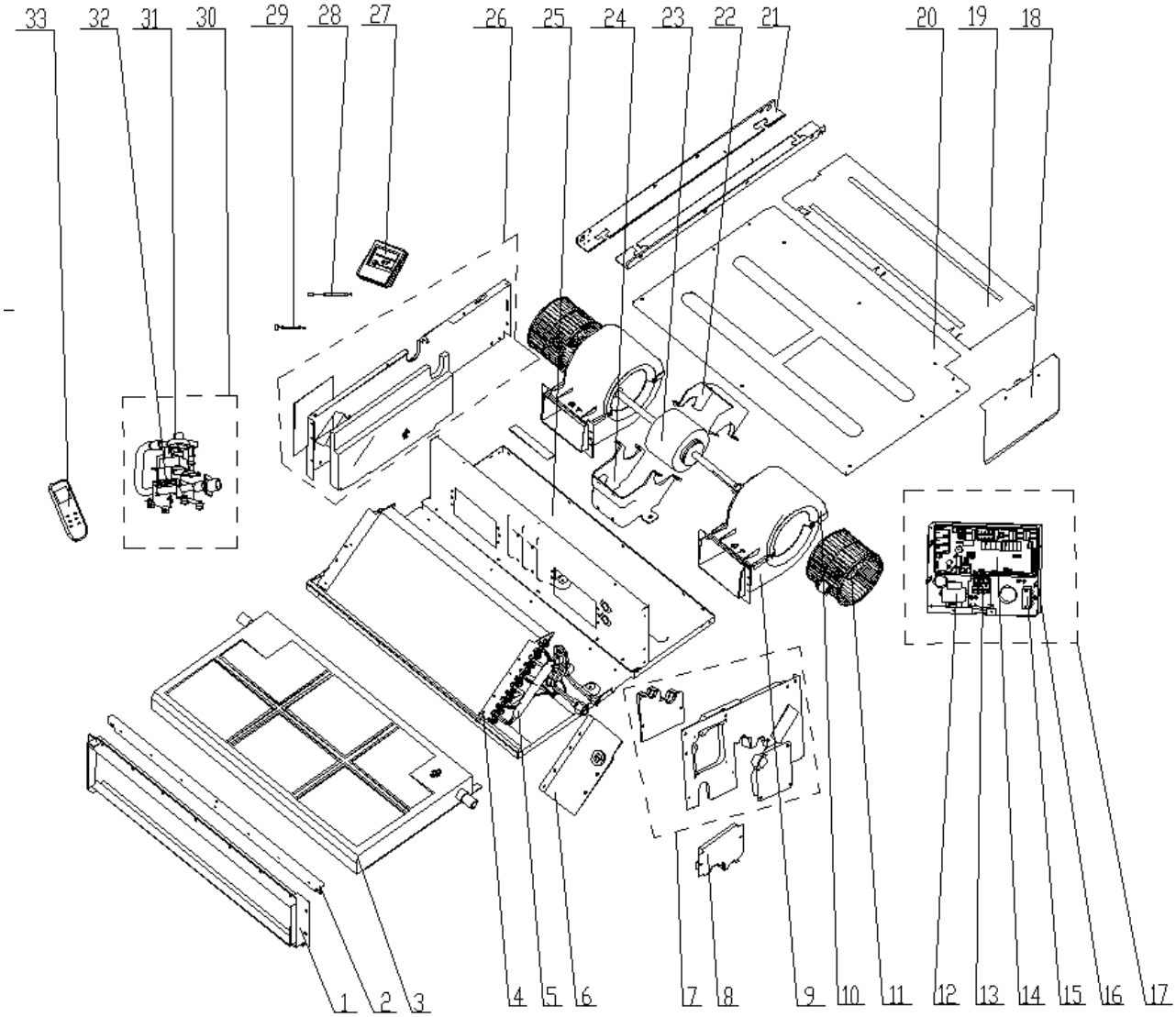

Part list:

GFH(09)EA-K3DNA1A/I for CN210N0010; GFH(12)EA-K3DNA1A/I for CN210N0020

No.	Description	GFH(09)EA-K3DNA1A/I		GFH(12)EA-K3DNA1A/I	
		Code	Qty	Code	Qty
1	Air outlet frame assy	01865216	1	01865216	1
2	Cover of air outlet	01265298	1	01265298	1
3	Water Tray Assy	01285332	1	01285332	1
4	Top Cover Board Assy	01265200099	1	01265325	1
5	Evaporator Assy	01024266	1	01024905	1
6	Plate of the Evaporator Sub-Assy	01495317	1	01495317	1
7	Left Side Plate Assy	01315334	1	01315334	1
8	Plate of the Exit Tube Sub-Assy	01495316	1	01495316	1
9	Front volute casing	26905205	2	26905205	2
10	Rear volute casing	26905206	2	26905206	2
11	Centrifugal fan	10425200	2	10425200	2
12	Transformer	43110233	1	43110233	1

13	Terminal Board	420111041	1	420111041	1
14	Main Board	30226338	1	30226338	1
15	Capacitor	33010020	1	33010027	1
16	Electric Box Sub-Assy	01395100	1	01395100	1
17	Electric Box assy	01395980	1	01395983	1
18	Electric Box Cover	01424253	1	01424253	1
19	Cover Plate of the Fan	01265300	1	01265300	1
20	Bottom Cover Plate	01265299	1	01265299	1
21	Supporter	01895225	2	01895225	2
22	Bar Clasp	70819522	4	70819522	4
23	Fan Motor	1570520102	1	1570520104	1
24	Supporter	01804348	1	01804348	1
25	Fan Mounting Plate	01325200010	1	01325200010	1
26	Right Side Plate Assy	'01315335	1	01315335	1
27	Display Board	'30296317	1	30296317	1
28	Ambient Temperature Sensor	39000206	1	39000206	1
29	Temperature Sensor	390001982G	1	390001982G	1
30	Water Pump Assy	15405241	1	15405241	1
31	Water Level Switch	45018012	1	45018012	1
32	Water Pump	43130324	1	43130324	1
33	Remote Controller	305100491	1	305100491	1

GFH(18)EA-K3DNA1A/I

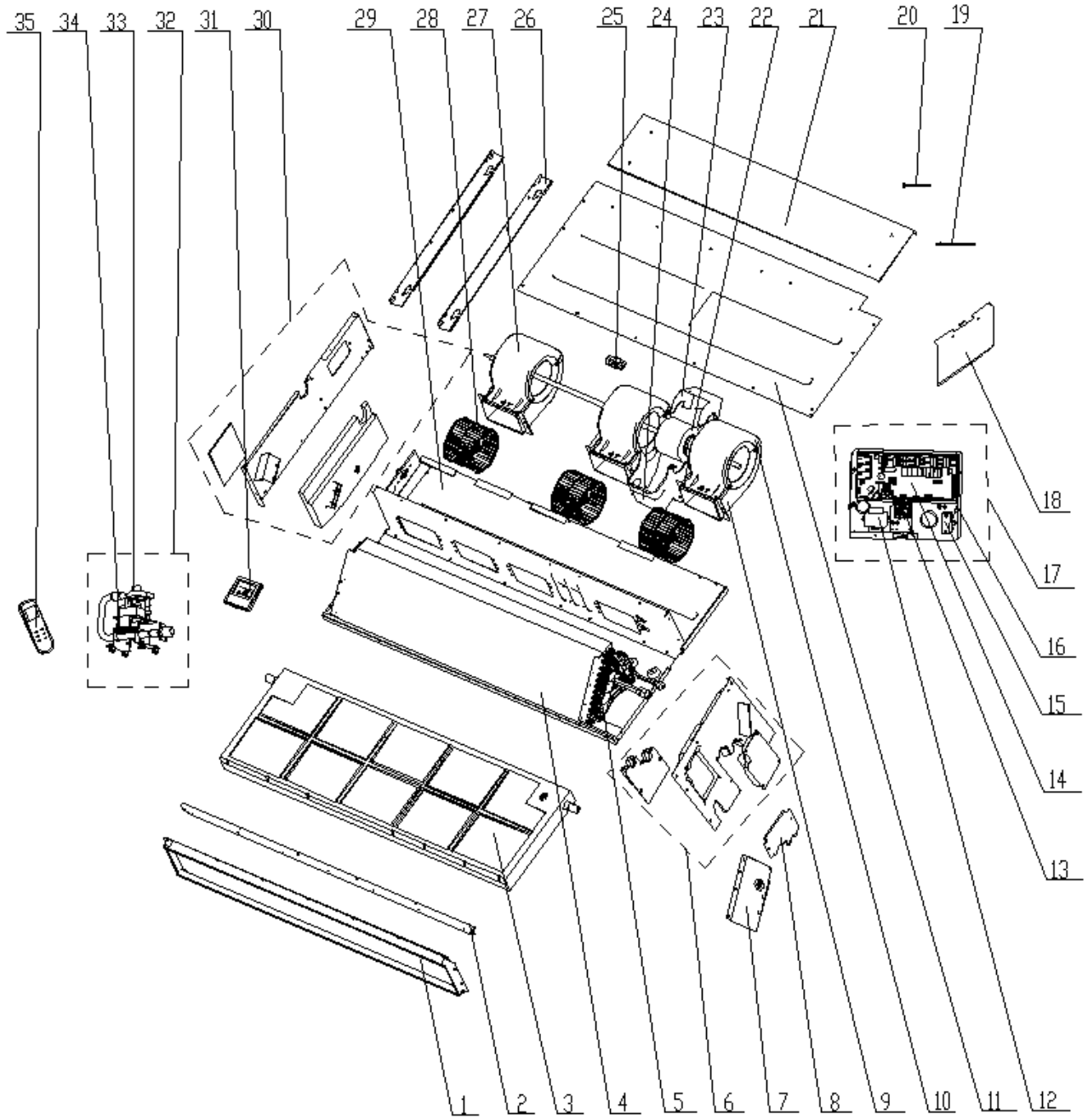

Part list:

GFH(18)EA-K3DNA1A/I for CN210N0030;

NO.	Description	GFH(18)EA-K3DNA1A/I	
		Code	Qty
1	Air outlet frame assy	01865217	1
2	Cover of air outlet	01265331	1
3	Water Tray Assy	01285333	1
4	Evaporator Assy	01024268	1
5	Lower Cover Plate Sub-Assy	01265328	1
6	Left Side Plate Assy	01315334	1
7	Plate of the Evaporator Sub-Assy	01495317	1
8	Plate of the Exit Tube Sub-Assy	01495316	1
9	Front volute casing	26905205	3

10	Rear volute casing	26905206	3
11	Bottom Cover Plate	01265332	1
12	Transformer	43110233	1
13	Terminal Board	420111041	1
14	Main Board	30226338	1
15	Capacitor	33010027	1
16	Electric Box Sub-Assy	01395100	1
17	Electric Box assy	01395984	1
18	Electric Box Cover	01424253	1
19	Temperature Sensor	390001982G	1
20	Ambient Temperature Sensor	39000206	1
21	Cover Plate of the Fan	01265333	1
22	Fan Motor	15705218	1
23	Bar Clasp	70819522	4
24	Supporter	01804348	1
25	Joint Slack	73018731	1
26	Supporter	01895225	2
27	Rotary Axis Sub-Assy	73018020	1
28	Centrifugal fan	10425200	3
29	Fan Mounting Plate	01325200009	1
30	Right Side Plate Assy	01305263	1
31	Display Board	30296317	1
32	Water Pump Assy	15405241	1
33	Water Level Switch	45018012	1
34	Water Pump	43130324	1
35	Remote Controller	305100491	1

GFH(21)EA-K3DNA1A/I; GFH(24)EA-K3DNA1A/I

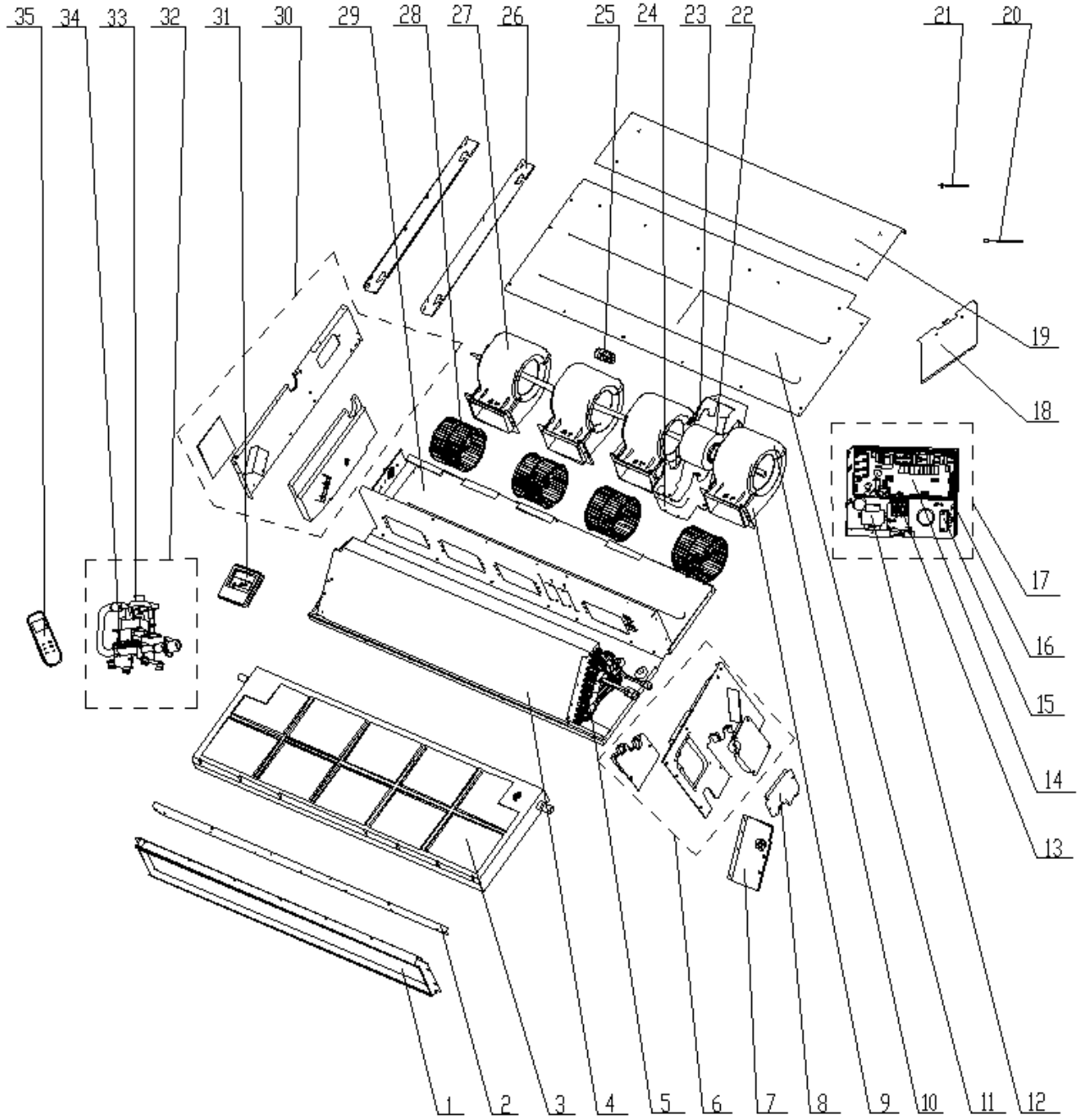

Part list:

GFH(21)EA-K3DNA1A/I for CN210N0040; GFH(24)EA-K3DNA1A/I for CN210N0050

NO.	Description	GFH(21)EA-K3DNA1A/I GFH(24)EA-K3DNA1A/I	
		Code	Qty
1	Air outlet frame assy	01375224	1
2	Cover of air outlet	01265335	1
3	Water Tray Assy	01285334	1
4	Evaporator Assy	01024269	1
5	Lower Cover Plate Sub-Assy	01265339	1
6	Left Side Plate Assy	'01315334	1
7	Plate of the Evaporator Sub-Assy	01495317	1
8	Plate of the Exit Tube Sub-Assy	01495316	1

9	Front volute casing	26905205	4
10	Rear volute casing	26905206	4
11	Bottom Cover Plate	01265337	1
12	Transformer	43110233	1
13	Terminal Board	420111041	1
14	Main Board	30226338	1
15	Capacitor	33010027	1
16	Electric Box Sub-Assy	01395100	1
17	Electric Box assy	01395985	1
18	Electric Box Cover	01424253	1
19	Cover Plate of the Fan	01265338	1
20	Temperature Sensor	390001982G	1
21	Ambient Temperature Sensor	39000206	1
22	Fan Motor	1570411102	1
23	Bar Clasp	70819522	4
24	Supporter	01804348	1
25	Joint Slack	73018731	1
26	Supporter	01895225	2
27	Rotary Axis Sub-Assy	73018000013	1
28	Centrifugal fan	10425200	4
29	Fan Mounting Plate	01325200008	1
30	Right Side Plate Assy	01305263	1
31	Display Board	30296317	1
32	Water Pump Assy	15405241	1
33	Water Level Switch	45018012	1
34	Water Pump	43130324	1
35	Remote Controller	305100491	1

7.2.3 Cassette type

GKH(12)BA-K3DNA2A/I; GKH(18)BA-K3DNA2A/I

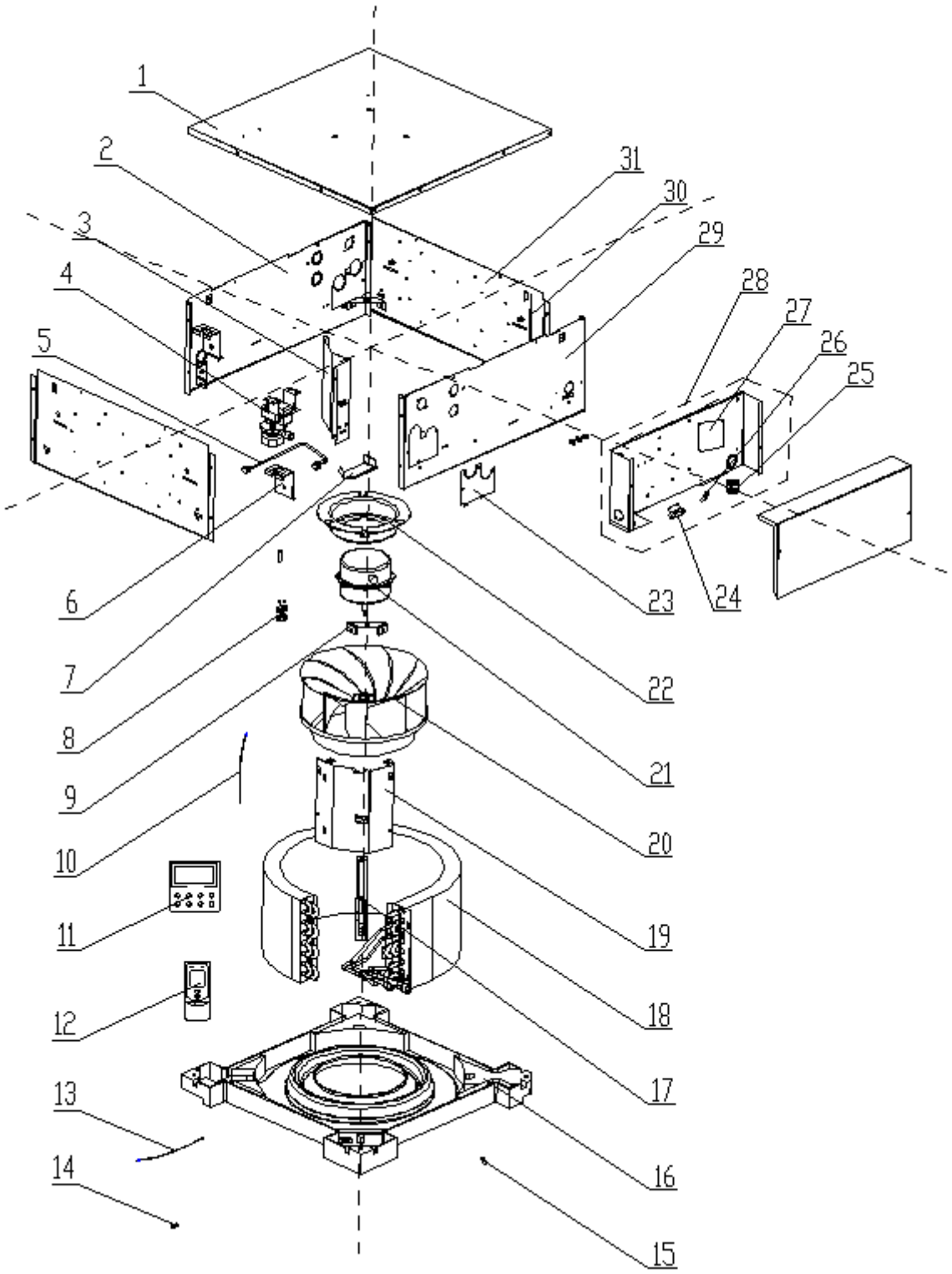

Part list:

GKH(12)BA-K3DNA2A/I for CN510N0040; GKH(18)BA-K3DNA2A/I for CN510N0050

NO.	Description	GKH(12)BA-K3DNA2A/I(Body)		GKH(18)BA-K3DNA2A/I(Body)	
		Code	Qty	Code	Qty
1	Seat Board Sub-Assy	01222712	1	01222712	1
2	Front Side Plate	01302741	1	01302741	1
3	Right Baffle Assy	01362704	1	01362704	1
4	Water Pump	43130320	1	43130320	1
5	Pump Drainpipe	05232722	1	05232722	1
6	Body Installing Support	01332705	4	01332705	4
7	Pump Support Assy	01332708	1	01332708	1
8	Water Level Switch	450127011	1	450127011	1
9	Water Tray Support	01332706	4	01332706	4
10	Temperature Sensor	390001982G	1	390001982G	1
11	Display Board	30296317	1	30296317	1
12	Remote Controller	305100491	1	305100491	1
13	Ambient Temperature Sensor	3900019813	1	3900019813	1
14	Filter Sub-Assy	11120011	1	11120011	1
15	Filter Sub-Assy	11120012	1	11128633	1
16	Water Tray Assy	20182704	1	20182704	1
17	Evaporator Support	01072714	1	01072714	1
18	Evaporator Assy	01024307	1	0102430701	1
19	Evaporator Connection Board	01072713	1	01072713	1
20	Centrifugal Fan	10312702	1	10312702	1
21	Fan Motor	15704114	1	15704114	1
22	Motor Support	01702702	1	01702702	1
23	Tube Exit Plate Assy	01382719	1	01382719	1
24	Transformer	43110226	1	43110226	1
25	Terminal Board	420111041	1	420111041	1
26	Capacitor	33010026	1	33010026	1
27	Main Board	30226354	1	30226354	1
28	Electric Box Assy	01399534	1	01399534	1
29	Front Side Plate	01314211	1	01314211	1
30	Pass WirePlate	01362701	1	01362701	1
31	Right Side Plate Sub-Assy	01302743	2	01302743	2

GKH(12)BA-K3DNA1A/I; GKH(18)BA-K3DNA1A/I; GKH(24)BA-K3DNA1A/I

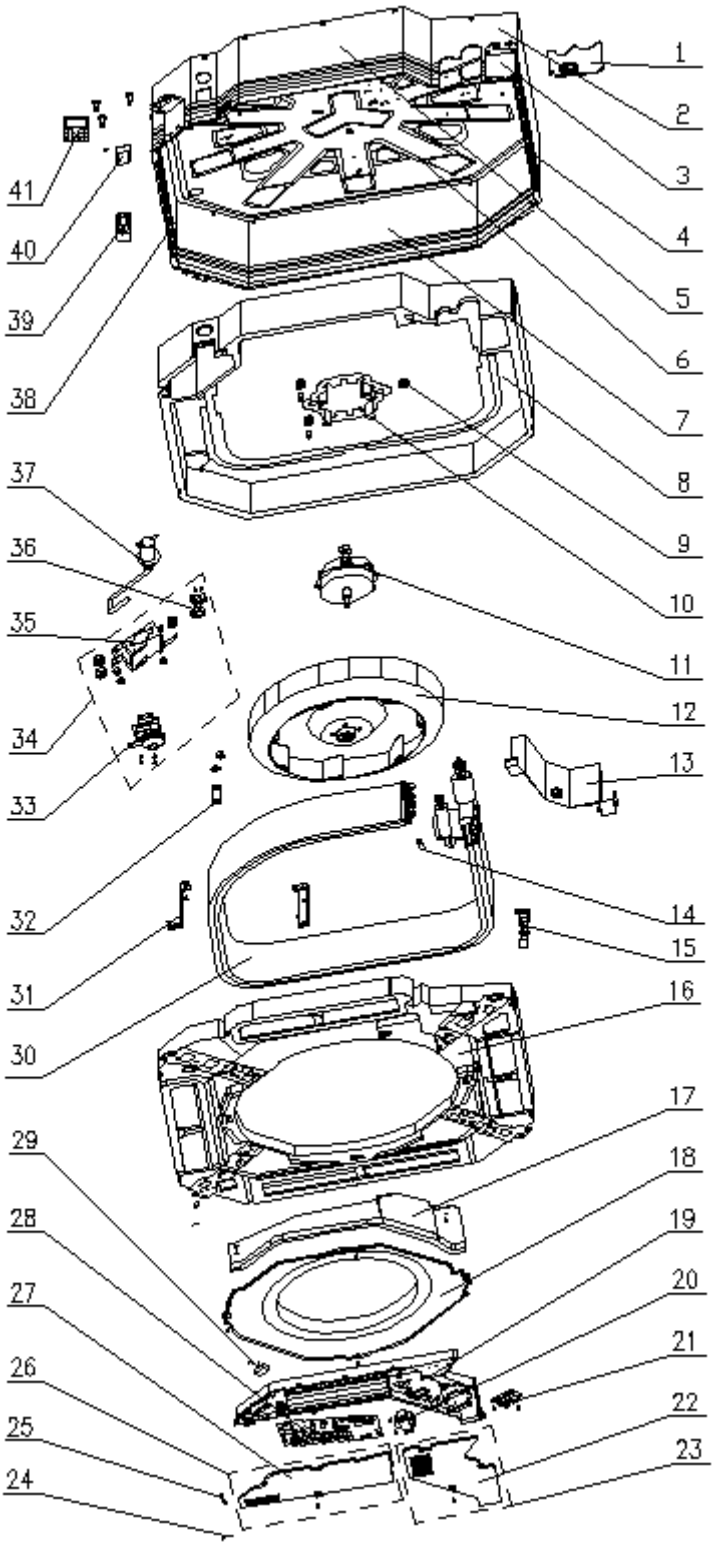

Part list:

GKH(12)BA-K3DNA1A/I for CN510N0010;GKH(18)BA-K3DNA1A/I for CN510N0020;
GKH(24)BA-K3DNA1A/I for CN510N0030

NO.	Description	GKH(12)BA-K3 DNA1A/I		GKH(18)BA-K3 DNA1A/I		GKH(24)BA-K3 DNA1A/I	
		Code	Qty	Code	Qty	Code	Qty
1	Tube Exit Plate Assy	01382717	1	01382717	1	01382715	1
2	Shell Assy	01432701	1	01432701	1	01432704	1
3	Body Installing Plate	01332701	4	01332701	4	01332701	4
4	Front Side Plate Assy	01302717	1	01302717	1	01302718	1
5	Left Side Plate Assy	01302740	1	01302740	1	01302715	1
6	Base Plate Assy	01222701	1	01222701	1	01222701	1
7	Rear Side Plate Assy	01302719	1	01302719	1	01302714	1
8	Bottom Foam Assy	52012720	1	52012720	1	52012722	1
9	Motor Gasket	76712711	4	76712711	4	76712711	4
10	Motor Support	01702701	1	01702701	1	01702701	1
11	Fan Motor	15704901	1	15704901	1	15704102	1
12	Centrifugal Fan	10312721	1	10312721	1	10312705	1
13	Connected Board Assy Of vaporator	01072731	1	01072731	1	01074042	1
14	Filter Sub-Assy	11120011	1	11120011	1	11120012	1
15	Drain Hose Sub-Assy	05232050	1	05232050	1	05232702	1
16	Water Tray Assy	20182701	1	20182701	1	20182701	1
17	Electric Base Plate	01412721	1	01412721	1	01412721	1
18	Diversion Circle	10372701	1	10372701	1	10372701	1
19	Electric Box Assy	01399519	1	01399519	1	01399520	1
20	Terminal Board	42010196	1	42010196	1	42010196	1
21	Transformer	43110233	1	43110233	1	43110233	1
22	Electric Box Cover I	20102702	1	20102702	1	20102702	1
23	Electric Box Cover Sub-Assy1	20122054	1	20122054	1	20122054	1
24	Temperature Sensor	390001982G	1	390001982G	1	390001982G	1
25	Ambient Temperature Sensor	390001977	1	390001977	1	390001977	1
26	Electric Box Cover Sub-Assy2	20122055	1	20122055	1	20122055	1
27	Electric Box Cover II	20102703	1	20102703	1	20102703	1
28	Main Board	30226340	1	30226340	1	30226340	1
29	Capacitor CBB61	33010027	1	33010027	1	33010027	1
30	Evaporator Assy	01024163	1	01024323	1	01004641	1
31	Evaporator Support Assy	01072704	2	01072704	2	01072703	2
32	Magnetic Ring	49010104	1	49010104	1	49010104	1
33	Water Pump	43130324	1	43130324	1	43130324	1
34	Water Pump Assy	01332750	1	01332750	1	01332752	1
35	Pump Support	01332001	1	01332001	1	01329416	1
36	Water Level Switch	45018012	1	45018012	1	45018012	1
37	Pump Drainpipe	05232721	1	05232721	1	05230026	1
38	Right Side Plate Assy	01302710	1	01302710	1	01302716	1
39	Remote Controller	305100491	1	305100491	1	305100491	1
40	Pump Cover Board Assy	01252712	1	01252712	1	01252713	1
41	Display Board	30296317	1	30296317	1	30296317	1

7.2.4 Floor ceiling type

GTH(09)BA-K3DNA1A/I; GTH(12)BA-K3DNA1A/I

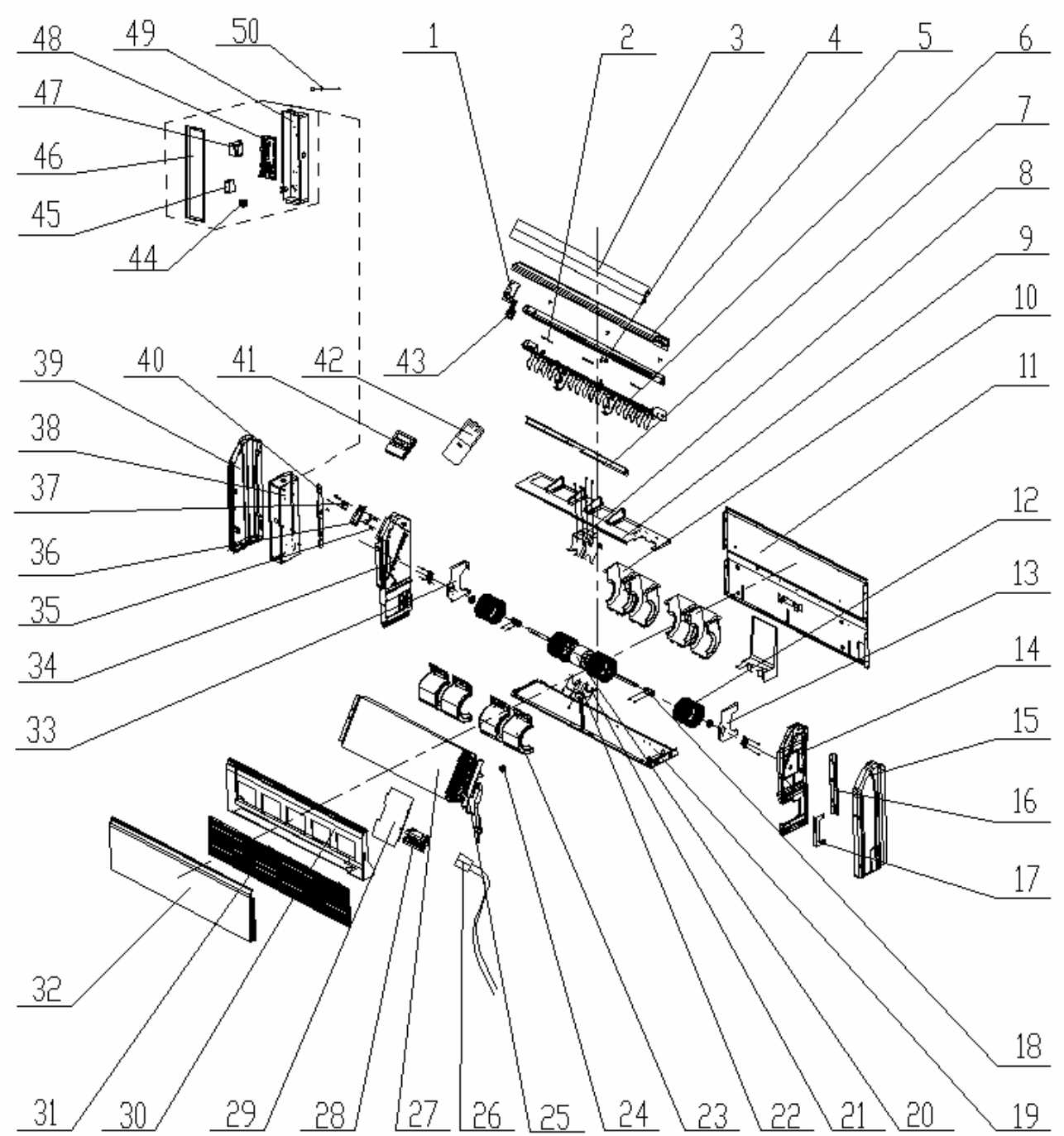

Part list:

GTH(09)BA-K3DNA1A/I for CN610N0010; GTH(12)BA-K3DNA1A/I for CN610N0020

NO.	Description	GTH(09)BA-K3DNA1A/I		GTH(12)BA-K3DNA1A/I	
		Code	Qty	Code	Qty
1	Fixed Mount	26909426R	1	26909426R	1
2	Louver Clamp	26112127	2	26112127	2
3	Guide Louver	10619403	1	10619403	1
4	Rotating Shaft	26909430	4	26909430	4
5	Front Connecting Plate	01349414P	1	01349414P	1
6	Base Frame	26909448	1	26909448	1

7	Air Lead Plate sub-assy	02229418	1	02229418	1
8	Supporter	01805288	1	01805288	1
9	Mid-clapboard sub-assy	01249416	1	01249416	1
10	Front volute casing	26905205	4	26905205	4
11	Rear side plate assy	01319430	1	01319430	1
12	Centrifugal fan	10425200	4	10425200	4
13	Support 1	01809417	1	01809417	1
14	Right Side Plate Sub-Assy	01319429	1	01319429	1
15	Right Cover Plate	26909444	1	26909444	1
16	Installation Supporting Frame	01809402	1	01809402	1
17	Connection Board	02229406	1	02229406	1
18	Joint Slack	73018731	2	73018731	2
19	Rear Connecting Plate	01349416	1	01349416	1
20	Fan Motor	1570940901	1	1570940901	1
21	Bar Clasp	70818405	1	70818405	1
22	Bar Clasp Sub-assy	70815201	1	70815201	1
23	Rear volute casing	26905206	4	26905206	4
24	Cable-Cross Loop	76510021	1	76510021	1
25	Filter 2	07216221	1	07216221	1
26	Sensor	3900020723	1	3900020723	1
27	Evaporator Assy	01029482	1	01029475	1
28	Press Plate of Water Lead flume	26909442	1	26909442	1
29	Connection Board	01344115	1	01344115	1
30	Water Tray Assy	01289404	1	01289404	1
31	Front Grill sub-assy	01579403	1	01579403	1
32	Top Cover Board Sub-assy	01269409	1	01269409	1
33	Support 2	01809418	1	01809418	1
34	Left Side Plate Sub-Assy	0131942801	1	0131942801	1
35	Rotating Shaft	26909412	1	26909412	1
36	Rotating Shaft	26909413	1	26909413	1
37	Step Motor	1521240206	1	1521240206	1
38	Electric Box Assy	01399517	1	01399517	1
39	Left Cover Plate	26909443	1	26909443	1
40	Installation Supporting Frame	01809401	1	01809401	1
41	Display Board	30296317	1	30296317	1
42	Remote Controller	305100491	1	305100491	1
43	Display Board	30294220	1	30294220	1
44	Terminal Board	42010178	1	42010178	1
45	Capacitor CBB61	33010089	1	33010089	1
46	Electric Box Cover	01429420	1	01429420	1
47	Transformer	4311023701	1	4311023701	1
48	Main Board	30226350	1	30226350	1
49	Electric Box	01429419	1	01429419	1
50	Room Sensor	39000191	1	39000191	1

GTH(18)BA-K3DNA1A/I

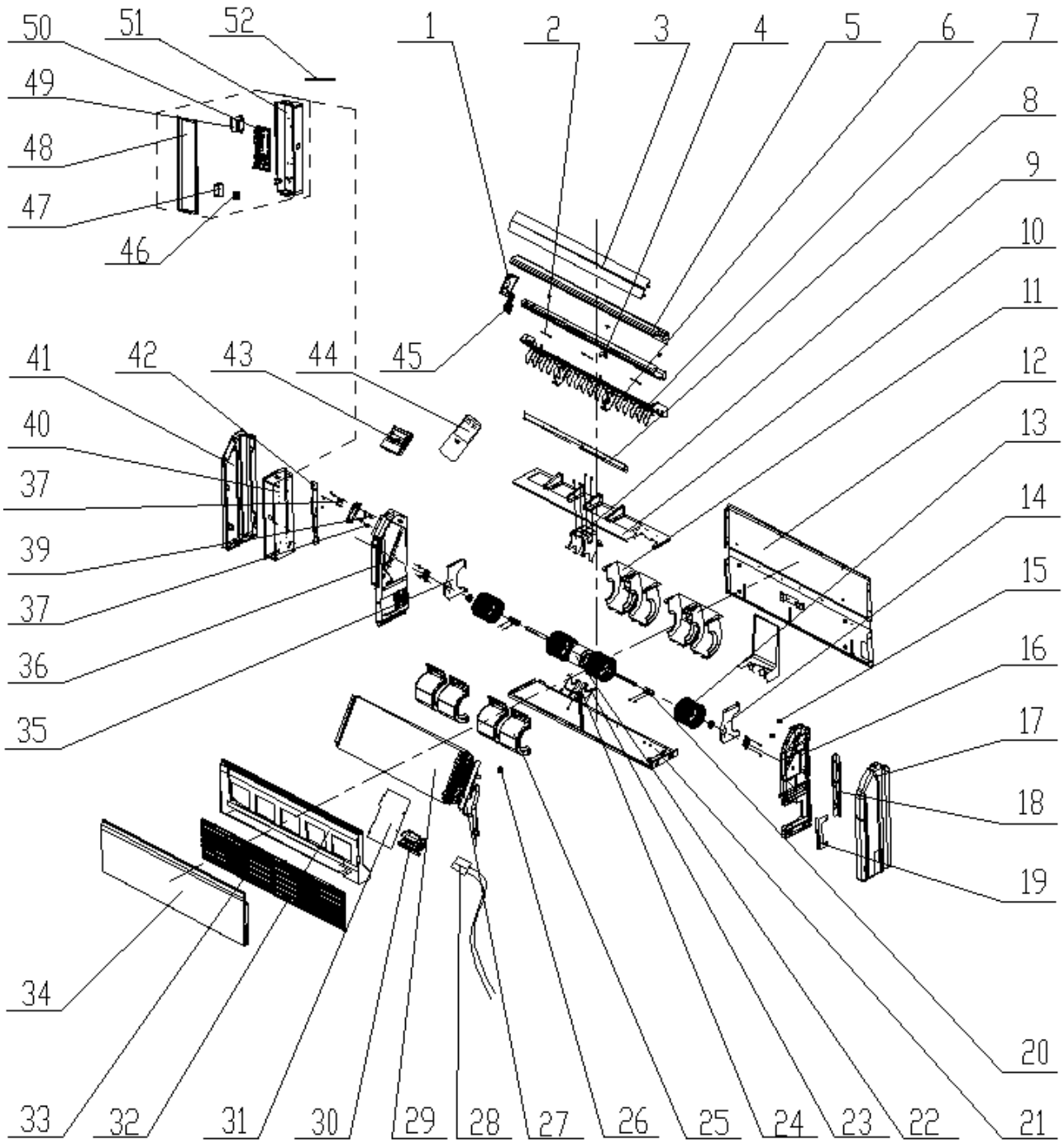

Part list:

GTH(18)BA-K3DNA1A/I for CN610N0030;

NO.	Description	GTH(18)BA-K3DNA1A/I	
		Code	Qty
1	Fixed Mount	26909426R	1
2	Louver Clamp	26112127	2
3	Guide Louver	10619403	1
4	Rotating Shaft	26909430	4
5	Front Connecting Plate	01349414P	1
6	Air Louver	10619404	16
7	Base Frame	26909448	1

8	Air Lead Plate sub-assy	02229418	1
9	Supporter	01805288	1
10	Mid-clapboard sub-assy	01249416	1
11	Front volute casing	26905205	4
12	Rear side plate assy	01319430	1
13	Centrifugal fan	10425200	4
14	Support 1	01809417	1
15	Axile Bush	10542704	2
16	Right Side Plate Sub-Assy	01319429	1
17	Right Cover Plate	26909444	1
18	Installation Supporting Frame	01809402	1
19	Connection Board	02229406	1
20	Joint Slack	73018731	2
21	Rear Connecting Plate	01349416	1
22	Fan Motor	1570940901	1
23	Bar Clasp	70818405	1
24	Bar Clasp Sub-assy	70815201	1
25	Rear volute casing	26905206	4
26	Cable-Cross Loop	76510021	1
27	Filter 2	07216221	1
28	Sensor	3900020723	1
29	Evaporator Assy	01029469	1
30	Press Plate of Water Lead flume	26909442	1
31	Connection Board	01344115	1
32	Water Tray Assy	01289404	1
33	Front Grill sub-assy	01579403	1
34	Top Cover Board Sub-assy	01269409	1
35	Support 2	01809418	1
36	Left Side Plate Sub-Assy	0131942801	1
37	Rotating Shaft	26909412	1
38	Rotating Shaft	26909413	1
39	Step Motor	1521240206	1
40	Electric Box Assy	01399511	1
41	Left Cover Plate	26909443	1
42	Installation Supporting Frame	01809401	1
43	Display Board	30296317	1
44	Remote Controller	305100491	1
45	Display Board	30294220	1
46	Terminal Board	42010178	1
47	Capacitor CBB61	33010026	1
48	Electric Box Cover	01429420	1
49	Transformer	4311023701	1
50	Main Board	30226350	1
51	Electric Box	01429419	1
52	Room Sensor	39000191	1

GTH(24)BA-K3DNA1A/I

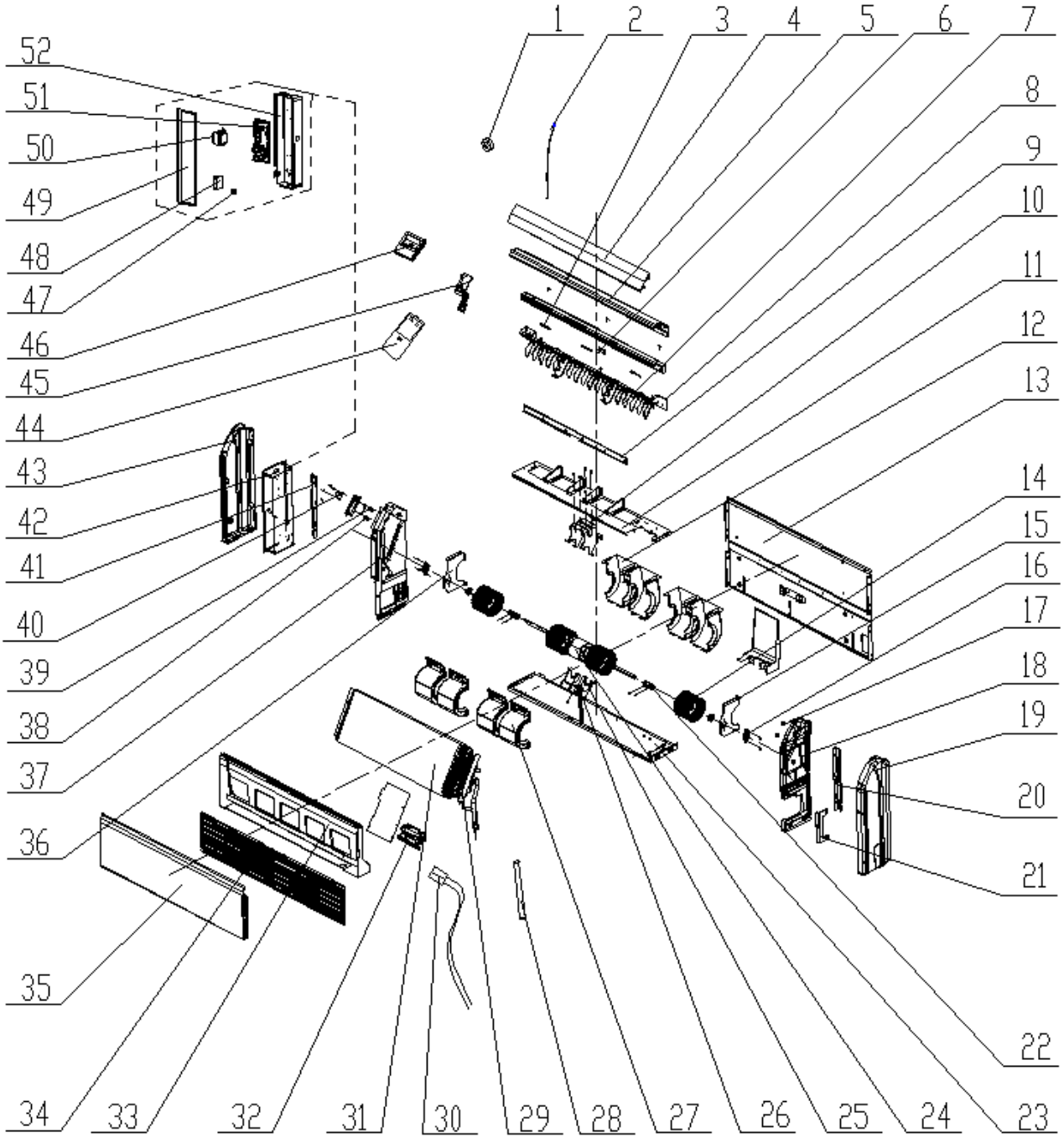

Part list:

GTH(24)BA-K3DNA1A/I for CN610N0040;

NO.	Description	GTH(24)BA-K3DNA1A/I	
		Code	Qty
1	Cable-Cross Loop	76510021	4
2	Room Sensor	39000191	1
3	Louver Clamp	26112127	2
4	Guide Louver	10619403	2
5	Front Connecting Plate	01349414P	1
6	Rotating Shaft	26909430	4
7	Air Louver	10619404	16
8	Base Frame	26909448	1

9	Induced air plate subassembly	02229418	1
10	Supporter	01805288	1
11	Mid-clapboard sub-assy	01249416	1
12	Front volute casing	26905205	4
13	Rear side plate assy	01319430	1
14	Centrifugal fan	10425200	4
15	Supporter	01809417	1
16	Support Of Motor Bearing	01792408	2
17	Axile Bush	10542704	2
18	Right Side Plate Sub-Assy	01319429	1
19	Right Cover Plate	26909444	1
20	Installation Supporting Frame	01809402	1
21	Connection Board	02229406	1
22	Joint Slack	73018731	2
23	Rear Connecting Plate	01349416	1
24	Fan Motor	15709409	1
25	Bar Clasp	70818405	1
26	Hoop subassembly	70815201	1
27	Rear volute casing	26905205	4
28	Drainage Pipe Sub-assy	05235434	1
29	Filter	07212001	1
30	Temperature Sensor	3900020723	1
31	Evaporator Assy	01029474	1
32	Press Plate of Water Lead flume	26909442	1
33	Water Tray Assy	01289404	1
34	Front Grill sub-assy	01579403	2
35	Top Cover Board Sub-assy	01269409	1
36	Supporter	01809418	1
37	Left Side Plate Sub-Assy	0131942801	1
38	Rotating Shaft	26909412	1
39	Rotating Shaft	26909413	1
40	Step Motor	1521240206	1
41	Installation Supporting Frame	01809401	1
42	Electric Box Assy	01399518	1
43	Left Cover Plate	26909443	1
44	Remote Controller	305100491	1
45	Display Board	30294220	1
46	Display Board	30296317	1
47	Terminal Board	42010178	1
48	Capacitor CBB61	33010027	1
49	Electric Box Cover	01429420	1
50	Transformer	4311023701	1
51	Main Board	30226350	1
52	Electric Box	01429419	1

7.2.5 Console type

GEH(09)AA-K3DNA1C/I; GEH(12)AA-K3DNA1C/I; GEH(18)AA-K3DNA1C/I

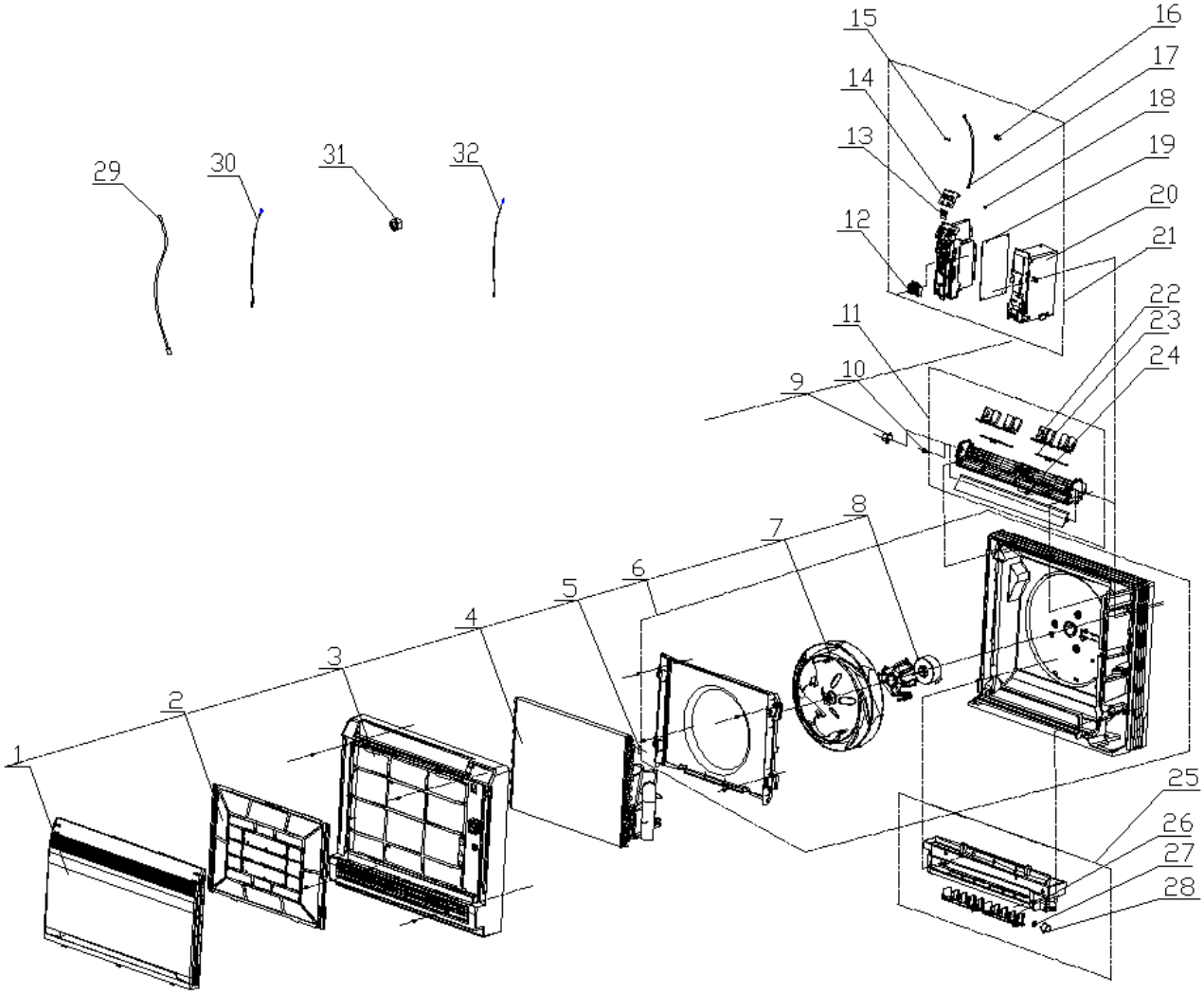

Part list:

GEH(09)AA-K3DNA1C/I for CV010N01500; GEH(12)AA-K3DNA1C/I for CV010N01600; GEH(18)AA-K3DNA1C/I for CV010N01700

NO.	Description	GEH(09)AA-K3 DNA1B/I		GEH(12)AA-K3 DNA1B/I		GEH(18)AA-K3 DNA1B/I	
		Code	Qty	Code	Qty	Code	Qty
1	Front Panel Assy	20012756	1	20012756	1	20012756	1
2	Filter Sub-Assy	11122139	1	11122139	1	11122139	1
3	Front Case Assy	20012601	1	20012601	1	20012601	1
4	Evaporator Assy	01002637	1	01002333	1	01002332	1
5	Temp. Sensor sleeving	05212423	1	05212423	1	05212423	1
6	Rear Case assy	22202462	1	22202462	1	22202462	1
7	Centrifugal fan	10312005	1	10312005	1	10312005	1
8	Fan Motor	15012123	1	15012123	1	15012123	1
9	Step Motor	1521210805	1	1521210805	1	1521210805	1
10	Crank	73012005	1	73012005	1	73012005	1
11	Swing Assy	10102042	1	10102042	1	10102042	1
12	Terminal Board	42011233	1	42011233	1	42011233	1
13	Switch Board	30112007	1	30112007	1	30112007	1
14	Display Board	30568131	1	30568131	1	30568131	1
15	Fuse	46010055	1	46010055	1	46010055	1
16	Radiator	49010252	1	49010252	1	49010252	1
17	Signal Wire	4003004202	1	4003004202	1	4003004202	1
18	Jumper	4202300101	1	4202300102	1	4202300103	1
19	Main Board	30138613	1	30138613	1	30138613	1
20	Electric Box	20112116	1	20112116	1	20112116	1
21	Electric Box Assy	2020262201	1	2020262101	1	2020242301	1
22	Air Louver (upper)	10512143	2	10512143	2	10512143	2
23	Swing lever	10582096	2	10582096	2	10582096	2
24	Shaft of guide louver	10542020	2	10542020	2	10542020	2
25	Water Tray Assy	20182141	1	20182141	1	20182141	1
26	Air Louver (lower)	10512144	2	10512144	2	10512144	2
27	Axis (lower step motor)	10542034	1	10542034	1	10542034	1
28	Step Motor	1521210101	1	1521210101	1	1521210101	1
29	Connecting Cable	400204056	0	400204056	0	400204056	0
30	Tube Sensor	390000591	1	390000591	1	390000591	1
31	Pipe Connection Nut accessories	06320020	1	06320020	1	06320020	1
32	Ambient Temperature Sensor	3900004508	1	3900004508	1	3900004508	1

7.3 BU Module

FXA2B-K; FXA3B-K

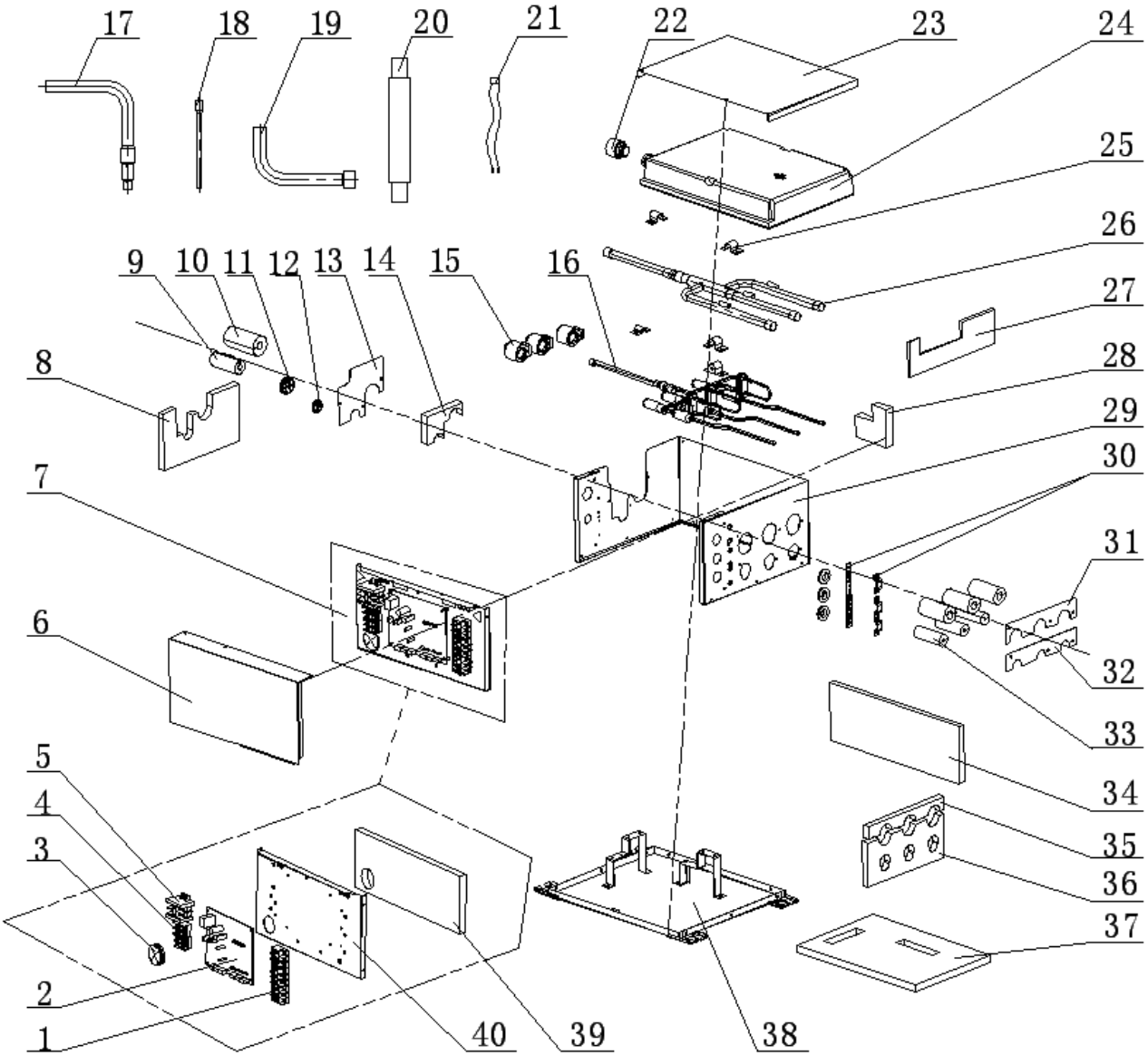

Part list:

FXA2B-K for LN01300200; FXA3B-K for LN01300210

NO.	Description	FXA2B-K		FXA3B-K	
		Code	Qty	Code	Qty
1	Terminal Board	420111041	2	420111041	3
2	Main Board	30276000002	1	30276000002	1
3	Rubber Ring	76515202	1	76515202	1
4	Terminal Board	42011154	2	42011154	2
5	Terminal Board	420111451	1	420111451	1
6	Electrical Equipment Plate	01424731P	1	01424731P	1
7	Electric Box Sub-assy	01324100030	1	01324100030	1
8	Sponge(Coping plate)	12204437	1	12204437	1
9	Heat Insulation Pipe 2	7509410000601	1	7509410000601	1
10	Heat Insulation Pipe	1220552703	1	1220552703	1
11	Rubber Ring	76510031	1	76510031	1

12	Rubber Ring	76510021	1	76510021	1
13	Fixed Plate 3	01844100008P	1	01844100008P	1
14	Sponge	12204440	1	12204440	1
15	Electric Expansive Loop	4304413215	2	4304413215	3
16	Liquid Branch Pipe	04224100163	1	04224100162	1
17	Branch Pipe 7	05375200002	2	05375200002	3
18	Branch Pipe 5	05375200005	1	05375200005	1
19	Branch Pipe(Outdoor unit)	05375200001	1	05375200001	1
20	Drainage Pipe	05232046	1	05232046	1
21	Temperature Sensor Assy	3900825301G	1	39008253G	1
22	Rubber Plug(Water Tray)	76815214	1	76815214	1
23	The Coping Plate	01264715P	1	01264715P	1
24	Water Tray	12504100001	1	12504100001	1
25	Wire Clamp	71010103	3	71010103	4
26	Gas Branch Pipe	04574100032	1	04574100031	1
27	Sponge 2	12204100068	1	12204100068	1
28	Sponge	12204100069	1	12204100069	1
29	Rear Side Plate	01314100032P	1	01341714P	1
30	Wire Clamp	71010003	2	71010003	3
31	Fixed Plate 2	01844100016P	1	01844100007P	1
32	Fixed Plate 1	01844100015P	1	01844100006P	1
33	Heat Insulation Pipe	75094100008	2	75094100008	3
34	Sponge	12204439	1	12204439	1
35	Sponge	12204100062	1	12204100061	1
36	Sponge	12204100043	1	12204438	1
37	Sponge	12204441	1	12204441	1
38	Rear Case Assy	01284100097P	1	01284100097P	1
39	Sponge	12204442	1	12204442	1
40	Electric Plate	01324749	1	01324749	1

Add: West Jinji Rd, Qianshan, Zhuhai 519070, Guangdong, China
Tel: (+86-756) 8522218 Fax: (+86-756) 8669426
Email: gree@gree.com.cn
http://www.gree.com

For continuous improvement in the products, Gree reserves the right to modify the product specification and appearance in this manual without notice and without incurring any obligations.

JF00301941