Technical Sales Guide

GMV X DC Inverter VRF Units

(GC202208-I)

TECHNICAL SALES GUIDE-50/60Hz

CAPACITY RANGE: 22.4~360.0kW

HIGH AMBIENT OPERATION TO 52°C

GREE ELECTRIC APPLIANCES, INC. OF ZHUHAI

CONTENTS

1 UNIT CHARACTERISTICS 1
2 UNIT PARAMETERS 8
3 ELECTRICAL SPECIFICATIONS 16
4 PRODUCT CAPACITY CORRECTION 18
5 UNIT NOISE CURVES 174
6 UNIT GRAVITY CENTER DIAGRAMS 177
7 UNIT INSTALLATION SPACE REQUIREMENTS 180
8 PIPING DESIGN 189
9 COMMUNICATION WIRING SYSTEM 195
10 EXTERNAL ELECTRICAL WIRING DIAGRAM 202
11 CALCULATION OF ADDITIONAL REFRIGERANT CHARGE 203
12 NOTICES 204
13 OPTIONAL ACCESSORIES 205

1 UNIT CHARACTERISTICS

1.1 Lineup of Outdoor Unit

GMV X DC Inverter VRF system: The capacities of basic models are: 8HP,10HP,12HP,14HP,16HP,18 HP,20HP,22HP,24HP,26HP, 28HP,30HP ,32HP,34HPand 36HP, the capacities for combination models are from 38HP to 128HP.

Capacity (HP)	Model	Combination method	Appearance
8	GMV-224WM/B-X(P)	-	
10	GMV-280WM/B-X(P)	-	
12	GMV-335WM/B-X(P)	-	
14	GMV-400WM/B-X(P)	-	
16	GMV-450WM/B-X(P)	-	
18	GMV-504WM/B-X(P)	-	
20	GMV-560WM/B-X(P)	-	
22	GMV-615WM/B-X(P)	-	
24	GMV-680WM/B-X(P)	-	
26	GMV-730WM/B-X(P)	-	
28	GMV-785WM/B-X(P)	-	
30	GMV-850WM/B-X(P)	-	
32	GMV-900WM/B-X(P)	-	
34	GMV-952WM/B-X(P)	-	
36	GMV-1010WM/B-X(P)	-	
38	GMV-1065WM/B-X(P)	GMV-450WM/B-X(P)+ GMV-615WM/B-X(P)	
40	GMV-1119WM/B-X(P)	GMV-504WM/B-X(P)+ GMV-615WM/B-X(P)	
42	GMV-1184WM/B-X(P)	GMV-504WM/B-X(P)+ GMV-680WM/B-X(P)	
44	GMV-1230WM/B-X(P)	GMV-615WM/B-X(P)+ GMV-615WM/B-X(P)	
46	GMV-1295WM/B-X(P)	GMV-615WM/B-X(P)+ GMV-680WM/B-X(P)	
48	GMV-1360WM/B-X(P)	GMV-680WM/B-X(P)+ GMV-680WM/B-X(P)	

Capacity (HP)	Model	Combination method	Appearance
50	GMV-1410WM/B-X(P)	GMV-560WM/B-X(P)+ GMV-850WM/B-X(P)	
52	GMV-1465WM/B-X(P)	GMV-615WM/B-X(P)+ GMV-850WM/B-X(P)	
54	GMV-1530WM/B-X(P)	GMV-680WM/B-X(P)+ GMV-850WM/B-X(P)	
56	GMV-1580WM/B-X(P)	GMV-680WM/B-X(P)+ GMV-900WM/B-X(P)	
58	GMV-1635WM/B-X(P)	GMV-785WM/B-X(P)+ GMV-850WM/B-X(P)	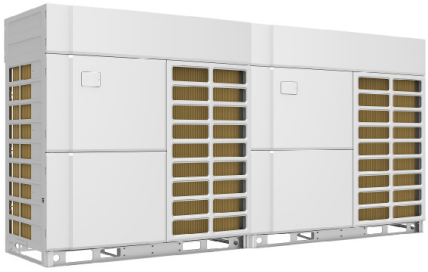
60	GMV-1700WM/B-X(P)	GMV-850WM/B-X(P)+ GMV-850WM/B-X(P)	
62	GMV-1750WM/B-X(P)	GMV-850WM/B-X(P)+ GMV-900WM/B-X(P)	
64	GMV-1795WM/B-X(P)	GMV-785WM/B-X(P)+ GMV-1010WM/B-X(P)	
66	GMV-1860WM/B-X(P)	GMV-850WM/B-X(P)+ GMV-1010WM/B-X(P)	
68	GMV-1910WM/B-X(P)	GMV-900WM/B-X(P)+ GMV-1010WM/B-X(P)	
70	GMV-1962WM/B-X(P)	GMV-952WM/B-X(P)+ GMV-1010WM/B-X(P)	
72	GMV-2020WM/B-X(P)	GMV-1010WM/B-X(P)+ GMV-1010WM/B-X(P)	
74	GMV-2080WM/B-X(P)	GMV-615WM/B-X(P)+ GMV-615WM/B-X(P)+ GMV-850WM/B-X(P)	
76	GMV-2145WM/B-X(P)	GMV-615WM/B-X(P)+ GMV-680WM/B-X(P)+ GMV-850WM/B-X(P)	
78	GMV-2210WM/B-X(P)	GMV-680WM/B-X(P)+ GMV-680WM/B-X(P)+ GMV-850WM/B-X(P)	
80	GMV-2240WM/B-X(P)	GMV-615WM/B-X(P)+ GMV-615WM/B-X(P)+ GMV-1010WM/B-X(P)	
82	GMV-2312WM/B-X(P)	GMV-680WM/B-X(P)+ GMV-680WM/B-X(P)+ GMV-952WM/B-X(P)	
84	GMV-2370WM/B-X(P)	GMV-680WM/B-X(P)+ GMV-680WM/B-X(P)+ GMV-1010WM/B-X(P)	
86	GMV-2430WM/B-X(P)	GMV-680WM/B-X(P)+ GMV-850WM/B-X(P)+ GMV-900WM/B-X(P)	
88	GMV-2480WM/B-X(P)	GMV-680WM/B-X(P)+ GMV-900WM/B-X(P)+ GMV-900WM/B-X(P)	
90	GMV-2532WM/B-X(P)	GMV-680WM/B-X(P)+ GMV-900WM/B-X(P)+ GMV-952WM/B-X(P)	
92	GMV-2584WM/B-X(P)	GMV-680WM/B-X(P)+ GMV-952WM/B-X(P)+ GMV-952WM/B-X(P)	
94	GMV-2642WM/B-X(P)	GMV-680WM/B-X(P)+ GMV-952WM/B-X(P)+ GMV-1010WM/B-X(P)	
96	GMV-2700WM/B-X(P)	GMV-680WM/B-X(P)+ GMV-1010WM/B-X(P)+ GMV-1010WM/B-X(P)	

GMV X DC Inverter VRF Units

Capacity (HP)	Model	Combination method	Appearance
98	GMV-2754WM/B-X(P)	GMV-850WM/B-X(P)+ GMV-952WM/B-X(P)+ GMV-952WM/B-X(P)	
100	GMV-2812WM/B-X(P)	GMV-850WM/B-X(P)+ GMV-952WM/B-X(P)+ GMV-1010WM/B-X(P)	
102	GMV-2870WM/B-X(P)	GMV-850WM/B-X(P)+ GMV-1010WM/B-X(P)+ GMV-1010WM/B-X(P)	
104	GMV-2920WM/B-X(P)	GMV-900WM/B-X(P)+ GMV-1010WM/B-X(P)+ GMV-1010WM/B-X(P)	
106	GMV-2972WM/B-X(P)	GMV-952WM/B-X(P)+ GMV-1010WM/B-X(P)+ GMV-1010WM/B-X(P)	
108	GMV-3030WM/B-X(P)	GMV-1010WM/B-X(P)+ GMV-1010WM/B-X(P)+ GMV-1010WM/B-X(P)	
110	GMV-3110WM/B-X(P)	GMV-680WM/B-X(P)+ GMV-680WM/B-X(P)+ GMV-850WM/B-X(P)+ GMV-900WM/B-X(P)	
112	GMV-3160WM/B-X(P)	GMV-680WM/B-X(P)+ GMV-680WM/B-X(P)+ GMV-900WM/B-X(P)+ GMV-900WM/B-X(P)	
114	GMV-3195WM/B-X(P)	GMV-560WM/B-X(P)+ GMV-615WM/B-X(P)+ GMV-1010WM/B-X(P)+ GMV-1010WM/B-X(P)	
116	GMV-3250WM/B-X(P)	GMV-615WM/B-X(P)+ GMV-615WM/B-X(P)+ GMV-1010WM/B-X(P)+ GMV-1010WM/B-X(P)	
118	GMV-3315WM/B-X(P)	GMV-615WM/B-X(P)+ GMV-680WM/B-X(P)+ GMV-1010WM/B-X(P)+ GMV-1010WM/B-X(P)	
120	GMV-3380WM/B-X(P)	GMV-680WM/B-X(P)+ GMV-680WM/B-X(P)+ GMV-1010WM/B-X(P)+ GMV-1010WM/B-X(P)	
122	GMV-3430WM/B-X(P)	GMV-730WM/B-X(P)+ GMV-900WM/B-X(P)+ GMV-900WM/B-X(P)+ GMV-900WM/B-X(P)	
124	GMV-3485WM/B-X(P)	GMV-785WM/B-X(P)+ GMV-900WM/B-X(P)+ GMV-900WM/B-X(P)+ GMV-900WM/B-X(P)	
126	GMV-3550WM/B-X(P)	GMV-850WM/B-X(P)+ GMV-900WM/B-X(P)+ GMV-900WM/B-X(P)+ GMV-900WM/B-X(P)	
128	GMV-3600WM/B-X(P)	GMV-900WM/B-X(P)+ GMV-900WM/B-X(P)+ GMV-900WM/B-X(P)+ GMV-900WM/B-X(P)	

1.2 Product Functions and Features

Gree GMV X DC inverter multi VRF system adopts the advanced technologies such as efficient low-temperature enhanced vapor injection (EVI) system, partition heat exchange flow path, deep subcooling design, integrated aluminium electronic control box, reliable operation control under ultra low temperature and so on, so unit can operate smoothly under ambient temperature of -25°C～52°C. It provides comfortable environment for the user no matter in severe cold or in intense heat. The capacity range of GMV X is 22.4kW～360kW(8HP～128HP), 61 models in total, allowing for wide application and more flexible installation. It can be applied to the commercial applications like large office building, production factory, large malls or residential villa.

（1）Energy-efficient performance

The GMV X series can realize energy-efficient performance due to the advanced full DC inverter technology, optimized refrigerant system design and precise intelligent control technology.

◆ High pressure chamber compressor

The compressor adopts the high pressure chamber which can directly inhale and reduce the overheat loss to improve compression efficiency.

◆ Sensorless DC inverter fan motor

The DC inverter motor adopts the electromotive force to realize stepless speed regulation between 5Hz-90Hz. Compared with normal DC inverter motor, its operation current is smaller, input motor power is lower and efficiency is greatly improved.

◆ Advanced torque control technology

Utilize DC inverter compressor rotor magnetic reluctance torque effectively, achieving the maximum torque output with minimum current input, reducing motor winding loss and realizing higher efficiency.

Directly control the torque to realize ultra-low speed operation of DC inverter fan motor, and the torque pulsation is small, which can satisfy the system demand while meeting the higher requirements of comfort.

（2）Quiet operation

GMV X series product aims to provide comfortable user experience effectively. The unit can operate under low noise due to upgraded design of components.

◆ Quiet mode of ODU

◇ Quiet at night

The system will memorize the time when the peak outdoor temperature appears.It will enter night quiet operation mode automatically after 8h, it will return to normal mode after the night mode operating for 9h. 9 kinds of quiet modes are available based on the actual application occasion.

◇ Compulsory quiet setting

When the unit is installed in the locations with low noise requirement, quiet operation is necessary no matter in the daytime or night, at this time, you can have three kinds of compulsory quiet mode setting to ensure that the unit is operated under low noise mode to meet the requirement. The lowest noise value is 40dB (A).

◆ Quiet mode of IDU

IDU also adopts DC inverter motor to realize the stepless adjustment of fan speed, reducing noise value greatly, setting auto mode based on the indoor temperature and user activity for IDU through weird controller, and the lowest noise value is 22dB(A).

（3）Advanced technology ensures reliability

Gree DC inverter VRF system is widely recognized in the industry with the advanced technology. With continuous research and experiment, Gree DC inverter VRF technology has been greatly developed in terms of the electrical component, mechanical assembly, control and communication technology.

◆ Oil return control technology

◇ New oil return control

Through pressure control, the oil control of system and oil storage status of each compressor can be

controlled effectively,thus improving the service life of compressor greatly.

◇ Exclusive oil storage technology of compressor

This technology are able to control the minimum oil level required through detecting the parameter when the compressor operated.

◆ Refrigerant storage and distribution technology

Optimized refrigerant distribution control with no accumulator in the refrigerant circuit can store the surplus refrigerant in the piping system, enabling refrigerant charge volume reduced drastically.

◆ Balancing oil control technology

◇ Oil balance technology among modules

Different from the traditional timer oil return, it's needless to turn off the unit to balance the oil, the system can judge the operation status of each module and compressor, calculate the oil reserve capacity of compressor, adjust the operation status of compressor to realize oil balance among modules. The non-balancing oil pipe design ensures the reliability and the output capacity of the system to maintain AC comfort.

◇ Oil balance technology among compressor

The refrigerant is drawn into the compression chamber of the compressor by the suction pipe and the refrigerant is compressed and discharged into the cavity of the totally enclosed compressor, and then flows through the refrigeration system through the exhaust pipe. According to the principle of hydrodynamic and the actual amount of oil required in the working process of the compressor,the oil level of the oil pool is determined and controlled; the minimum oil volume required for each compressor during operation is ensured to realize the oil balance among the compressors.

◆ Subcooling control technology

New efficient plate subcooler and condensate depression control method is adopted for ensuring required cooling capacity, and the degree of subcooling is up to 35°C.

◆ Unique precise control

ODU adopts dual electronic expansion valve, the main electronic expansion valve with 3,000 pulses and the subcooling electronic expansion valve with 480 pulses can precisely control the refrigerant flow of the unit.

The unit can startup quickly under different ambient temperature, the shortest startup time is only 75s.

（4）Humanized operation design

◆ Auto address allocation and non-polarity communication

◆ Auto commissioning and error detection

◆ Five auto commissioning function

◇ Auto allocation of IDU and ODU address

◇ Auto detection of IDU and ODU quantity

◇ Auto detection of internal error of the unit

◇ Start test run automatically

◇ Real-time judgment of pipeline abnormality

◆ The unit has emergency operations for module, compressor, fan and sensor

（5）Intelligent management

◆ Dual energy saving operation mode

With the further development of energy conservation, emission reduction and the stricter national requirements to urban electricity consumption, energy-saving measures need to be taken. For example, in summer, many cities will introduce corresponding power-limiting measures for dealing with the peak season of electricity consumption. Gree DC inverter VRF system has two energy-saving modes for users to choose freely to meet the requirement on peak power consumption and power-limiting.

◇ Preference to capacity: If there is sufficient power supply, priority is given to meeting the capacity needs. This mode is default factory setting.

◇ Auto energy-saving: System will automatically adjust parameters and balance the capacity and

energy consumption according to the operating status.

◇ Compulsory energy-saving: The system will realize 20% of energy conservation at the most through limiting electricity consumption compulsorily.

◆ Emergency stop

Under the emergence situation, ODU is capable of releasing the fire alarm linkage signal directly and fastly and stopping the unit immediately to avoid any potential loses and safety issues.

（6）Super-long piping design

Gree DC inverter VRF system is outstanding in the aspect of easy and convenient piping, and the maximum length of total pipe is 1000m, thus, the AC system is applicable to different architecture, and the installation cost can be reduced.

（7）Maximum amount of IDU in one refrigerant circuit

Gree DC inverter VRF system can connect 80 sets of IDUs in an refrigerant circuit at the most in normal condition.

（8）Wide operation range

Operation ambient temperature range: cooling -15* ～ 52°C and heating -25 ～ 24°C.

Generally, the lowest operating temperature for cooling is -5°C. If cooling at the -15~ -5°C is needed, please contact the engineer for customized configuration.

（9）New modular load allocation control

Choose unit module for operating according to the operation status to realize efficient operation among modular units, reduce energy consumption loss and improve operation energy efficiency, which will enhance the reliability of the unit.

1.3 Nomenclature

GMV	□	-	□	□	□	□	□	W	□	/	□	□	□	(□)
1	2		3	4	5	6	7	8	9		10	11	12	13

No.	Description	Options
1	Product code	GMV—Gree Multi VRF Units
2	Suitable climate	Omit—T1 condition; T2—low temperature climate; T3—high temperature climate
3	RAC or CAC	Omit—CAC H—RAC
4	Special function	Omit —without special function G—high sensible heat V—low-temperature heat pump
5	Unit type	Omit—DC inverter Y—solar power
6	Function code	Omit—no special function , Q—heat recovery model unit, S—water heater unit, W—water cooled unit, X—air processing unit, Z—reheat dehumidifier unit, Y—PV unit, G—high sensible heat unit, V—low temperature heat pump unit, XR—thermal storage unit
7	Code of cooling capacity	Nominal capacity/100(W)
8	Code for outdoor unit	W—outdoor unit
9	Unit structure	Omit—Non-modular (top discharge) M—Modular (top discharge); L—Non-modular (side discharge);

No.	Description	Options
10	Refrigerant	Omit—R410A
11	Design No.	Named in order of A, B, C, or combined with 1, 2, 3…
12	Power supply	7000~18000W, Omit—1 phase; S—3 phase
13	Area code	Omit—for general area For special area, area code is in the form of one capital letter: A, P or S…

1.4 Operation Range

—	Cooling	Heating
Ambient temperature	-15*°C ~52°C DB	-25°C ~24°C DB
Indoor temperature	14°C~25°C WB	15°C ~27°C DB
Indoor humidity	≤80%	

*Note: Generally, the lowest operating temperature is -5°C, when cooling at -15°C ~-5°C, customized configuration is required.

When the indoor units are all VRF fresh air processor, the unit operating range is as follows:

Cooling	Ambient temperature: 16°C ~45°C
Heating	Ambient temperature: -7°C ~16°C

2 UNIT PARAMETERS

Model(single unit)			GMV-224WM/B-X(P)	GMV-280WM/B-X(P)	GMV-335WM/B-X(P)	GMV-400WM/B-X(P)	GMV-450WM/B-X(P)
Capacity	Cooling	kW	22.40	28.00	33.50	40.00	45.00
	Heating	kW	25.00	31.50	37.50	45.00	50.00
Power input	Cooling	kW	4.92	6.51	8.09	9.66	11.34
	Heating	kW	4.78	6.20	8.19	9.98	11.24
Minimum circuit current		A	19.9	22.4	23.3	28.8	31.0
Maximum fuse current		A	20	25	25	32	32
Power supply		-	380-415V 3N~ 50/60Hz	380-415V 3N~ 50/60Hz	380-415V 3N~ 50/60Hz	380-415V 3N~ 50/60Hz	380-415V 3N~ 50/60Hz
Air volume		m^3/h	9750	10500	11100	13500	15400
Outdoor static pressure		Pa	0~80	0~80	0~80	0~80	0~80
Sound pressure level		dB(A)	58	59	61	61	62
Compressor type		-	Inverter Scroll	Inverter Scroll	Inverter Scroll	Inverter Scroll	Inverter Scroll
Compressor quantity		N	1	1	1	1	1
Refrigerant oil model		-	FV68H	FV68H	FV68H	FV68H	FV68H
Refrigeration oil charge	Gross	L	4.6	4.6	4.6	6.1	6.1
	Compressor charge	L	1.1	1.1	1.1	1.1	1.1
	Others	L	3.5	3.5	3.5	5	5
Refrigerant type		-	R410A	R410A	R410A	R410A	R410A
Refrigerant charge		kg	5.0	5.0	5.2	6.5	7.0
Max. number of connectable IDUs		unit	13	16	19	23	26
Gas pipe		mm	Φ19.05	Φ22.2	Φ25.4	Φ25.4	Φ28.6
Liquid pipe		mm	Φ9.52	Φ9.52	Φ12.7	Φ12.7	Φ12.7
Outline dimensions (W × D × H)		mm	930×775×1690	930×775×1690	930×775×1690	1340×775×1690	1340×775×1690
Packing dimensions (W × D × H)		mm	1000×830×1855	1000×830×1855	1000×830×1855	1400×830×1855	1400×830×1855
Net weight		kg	210	210	215	280	280
Gross weight		kg	220	220	225	295	295

GMV X DC Inverter VRF Units

Model(single unit)			GMV-504WM/B-X(P)	GMV-560WM/B-X(P)	GMV-615WM/B-X(P)	GMV-680WM/B-X(P)	GMV-730WM/B-X(P)
Capacity	Cooling	kW	50.40	56.00	61.50	68.00	73.00
	Heating	kW	56.50	63.00	69.00	76.00	82.50
Power input	Cooling	kW	12.92	14.49	17.01	20.50	21.50
	Heating	kW	13.55	15.25	17.75	21.11	21.80
Minimum circuit current		A	31.5	39.3	46.1	46.1	49.3
Maximum fuse current		A	40	40	50	50	63
Power supply		-	380-415V 3N~ 50/60Hz	380-415V 3N~ 50/60Hz	380-415V 3N~ 50/60Hz	380-415V 3N~ 50/60Hz	380-415V 3N~ 50/60Hz
Air volume		m^3/h	16000	16500	16500	16500	26000
Outdoor static pressure		Pa	0~80	0~80	0~80	0~80	0~50*
Sound pressure level		dB(A)	63	64	65	66	66
Compressor type		-	Inverter Scroll	Inverter Scroll	Inverter Scroll	Inverter Scroll	Inverter Scroll
Compressor quantity		N	1	1	1	1	2
Refrigerant oil model		-	FV68H	FV68H	FV68H	FV68H	FV68H
Refrigeration oil charge	Gross	L	6.1	6.1	6.1	6.1	12.2
	Compressor charge	L	1.1	1.1	1.1	1.1	1.1+1.1
	Others	L	5	5	5	5	10
Refrigerant type		-	R410A	R410A	R410A	R410A	R410A
Refrigerant charge		kg	7.5	7.5	7.8	7.8	11.0
Max. number of connectable IDUs		unit	29	33	36	39	43
Gas pipe		mm	Φ28.6	Φ28.6	Φ28.6	Φ28.6	Φ31.8
Liquid pipe		mm	Φ15.9	Φ15.9	Φ15.9	Φ15.9	Φ19.05
Outline dimensions (W × D × H)		mm	1340×775×1690	1340×775×1690	1340×775×1690	1340×775×1690	1760×835×1795
Packing dimensions (W × D × H)		mm	1400×830×1855	1400×830×1855	1400×830×1855	1400×830×1855	1828×913×1986
Net weight		kg	285	325	325	325	425
Gross weight		kg	300	340	340	340	450

Model(single unit)			GMV-785WM/B-X(P)	GMV-850WM/B-X(P)	GMV-900WM/B-X(P)	GMV-952WM/B-X(P)	GMV-1010WM/B-X(P)
Capacity	Cooling	kW	78.50	85.00	90.00	95.20	101.00
	Heating	kW	87.50	95.00	100.00	106.00	112.00
Power input	Cooling	kW	24.00	26.60	28.70	30.90	33.60
	Heating	kW	24.30	27.00	29.50	31.60	34.20
Minimum circuit current		A	52.2	57.2	58.7	60.1	61.8
Maximum fuse current		A	63	63	63	63	63
Power supply		-	380-415V 3N~ 50/60Hz	380-415V 3N~ 50/60Hz	380-415V 3N~ 50/60Hz	380-415V 3N~ 50/60Hz	380-415V 3N~ 50/60Hz
Air volume		m^3/h	26000	26000	28000	28000	28000
Outdoor static pressure		Pa	0~50*	0~50*	0~50*	0~50*	0~50*
Sound pressure level		dB(A)	67	67	68	68	69
Compressor type		-	Inverter Scroll	Inverter Scroll	Inverter Scroll	Inverter Scroll	Inverter Scroll
Compressor quantity		N	2	2	2	2	2
Refrigerant oil model		-	FV68H	FV68H	FV68H	FV68H	FV68H
Refrigeration oil charge	Gross	L	12.2	12.2	12.2	12.2	12.2
	Compressor charge	L	1.1+1.1	1.1+1.1	1.1+1.1	1.1+1.1	1.1+1.1
	Others	L	10	10	10	10	10
Refrigerant type		-	R410A	R410A	R410A	R410A	R410A
Refrigerant charge		kg	11.0	11.0	12.0	12.0	12.0
Max. number of connectable IDUs		unit	46	50	53	56	59
Gas pipe		mm	Φ31.8	Φ31.8	Φ31.8	Φ31.8	Φ38.1
Liquid pipe		mm	Φ19.05	Φ19.05	Φ19.05	Φ19.05	Φ19.05
Outline dimensions (W × D × H)		mm	1760×835×1795	1760×835×1795	1760×835×1795	1760×835×1795	1760×835×1795
Packing dimensions (W × D × H)		mm	1828×913×1986	1828×913×1986	1828×913×1986	1828×913×1986	1828×913×1986
Net weight		kg	425	425	455	455	455
Gross weight		kg	450	450	480	480	480

NOTES:

a. Rated cooling capacity test conditions: indoor 27℃ DB/19℃ WB, outdoor 35℃ DB; Connection pipe length: 5 m, without height drop between units

b. Rated heating capacity test conditions: indoor 20℃ DB, outdoor 7℃ DB/6 ℃ WB; Connection pipe length: 5 m, without height drop between units

c. The total capacity of connected indoor units must be in the range of 50%~135% of the outdoor unit capacity. The relevant parameters can be corrected by referring to the unit capacity correction table.

d. The above parameters are tested based on the standard connection pipe length. In the actual project, the parameters should be corrected referring to the capacity correction for the long connection pipe of units.

e. Specifications may be changed due to product improvement. Please refer to nameplates of the units.

f. Sound Pressure Level: Anechoic chamber conversion value, measured in a semi-anechoic room. During actual operation, the value may be higher due to ambient noise and echoes of the installation conditions.

g. Ex-factory default static pressure is 0Pa. For the model of GMV-730~1010WM/B-X(P), customized engineering service is needed if the outdoor static pressure is more than 0Pa.

GMV X DC Inverter VRF Units

Model(combined unit)			GMV-1065WM/B-X(P)	GMV-1119WM/B-X(P)	GMV-1184WM/B-X(P)	GMV-1230WM/B-X(P)	GMV-1295WM/B-X(P)
Model(single unit)			GMV-450WM/B-X(P)+GMV-615WM/B-X(P)	GMV-504WM/B-X(P)+GMV-615WM/B-X(P)	GMV-504WM/B-X(P)+GMV-680WM/B-X(P)	GMV-615WM/B-X(P)+GMV-615WM/B-X(P)	GMV-615WM/B-X(P)+GMV-680WM/B-X(P)
Capacity	Cooling	kW	106.50	111.90	118.40	123.00	129.50
	Heating	kW	119.00	125.50	132.50	138.00	145.00
Power input	Cooling	kW	28.35	29.93	33.42	34.02	37.51
	Heating	kW	28.99	31.30	34.66	35.50	38.86
Minimum circuit current		A	31+46.1	31.5+46.1	31.5+46.1	46.1+46.1	46.1+46.1
Maximum fuse current		A	32+50	40+50	40+50	50+50	50+50
Power supply		-	380-415V 3N~ 50/60Hz	380-415V 3N~ 50/60Hz	380-415V 3N~ 50/60Hz	380-415V 3N~ 50/60Hz	380-415V 3N~ 50/60Hz
Refrigerant type		-	R410A	R410A	R410A	R410A	R410A
Refrigerant charge		kg	7+7.8	7.5+7.8	7.5+7.8	7.8+7.8	7.8+7.8
Max. number of connectable IDUs		unit	63	64	64	64	64
Gas pipe		mm	Φ38.1	Φ38.1	Φ38.1	Φ38.1	Φ38.1
Liquid pipe		mm	Φ19.05	Φ19.05	Φ19.05	Φ19.05	Φ19.05
Net weight		kg	280+325	285+325	285+325	325+325	325+325
Gross weight		kg	295+340	300+340	300+340	340+340	340+340

Model(combined unit)			GMV-1360WM/B-X(P)	GMV-1410WM/B-X(P)	GMV-1465WM/B-X(P)	GMV-1530WM/B-X(P)	GMV-1580WM/B-X(P)
Model(single unit)			GMV-680WM/B-X(P)+GMV-680WM/B-X(P)	GMV-560WM/B-X(P)+GMV-850WM/B-X(P)	GMV-615WM/B-X(P)+GMV-850WM/B-X(P)	GMV-680WM/B-X(P)+GMV-850WM/B-X(P)	GMV-680WM/B-X(P)+GMV-900WM/B-X(P)
Capacity	Cooling	kW	136.00	141.00	146.50	153.00	158.00
	Heating	kW	152.00	158.00	164.00	171.00	176.00
Power input	Cooling	kW	41.00	41.09	43.61	47.10	49.20
	Heating	kW	42.22	42.25	44.75	48.11	50.61
Minimum circuit current		A	46.1+46.1	39.3+57.2	46.1+57.2	46.1+57.2	46.1+58.7
Maximum fuse current		A	50+50	40+63	50+63	50+63	50+63
Power supply		-	380-415V 3N~ 50/60Hz	380-415V 3N~ 50/60Hz	380-415V 3N~ 50/60Hz	380-415V 3N~ 50/60Hz	380-415V 3N~ 50/60Hz
Refrigerant type		-	R410A	R410A	R410A	R410A	R410A
Refrigerant charge		kg	7.8+7.8	7.5+11	7.8+11	7.8+11	7.8+12
Max. number of connectable IDUs		unit	64	66	69	71	74
Gas pipe		mm	Φ38.1	Φ41.3	Φ41.3	Φ41.3	Φ41.3
Liquid pipe		mm	Φ19.05	Φ19.05	Φ19.05	Φ19.05	Φ19.05
Net weight		kg	325+325	325+425	325+425	325+425	325+455
Gross weight		kg	340+340	340+450	340+450	340+450	340+480

Model(combined unit)			GMV-1635WM/B-X(P)	GMV-1700WM/B-X(P)	GMV-1750WM/B-X(P)	GMV-1795WM/B-X(P)	GMV-1860WM/B-X(P)
Model(single unit)			GMV-785WM/B-X(P)+GMV-850WM/B-X(P)	GMV-850WM/B-X(P)+GMV-850WM/B-X(P)	GMV-850WM/B-X(P)+GMV-900WM/B-X(P)	GMV-785WM/B-X(P)+GMV-1010WM/B-X(P)	GMV-850WM/B-X(P)+GMV-1010WM/B-X(P)
Capacity	Cooling	kW	163.50	170.00	175.00	179.50	186.00
	Heating	kW	182.50	190.00	195.00	199.50	207.00
Power input	Cooling	kW	50.60	53.20	55.30	57.60	60.20
	Heating	kW	51.30	54.00	56.50	58.50	61.20
Minimum circuit current		A	52.2+57.2	57.2+57.2	57.2+58.7	52.2+61.8	57.2+61.8
Maximum fuse current		A	63+63	63+63	63+63	63+63	63+63
Power supply		-	380-415V 3N~ 50/60Hz	380-415V 3N~ 50/60Hz	380-415V 3N~ 50/60Hz	380-415V 3N~ 50/60Hz	380-415V 3N~ 50/60Hz
Refrigerant type		-	R410A	R410A	R410A	R410A	R410A
Refrigerant charge		kg	11+11	11+11	11+12	11+12	11+12
Max. number of connectable IDUs		unit	77	80	80	80	80
Gas pipe		mm	Φ41.3	Φ41.3	Φ41.3	Φ41.3	Φ41.3
Liquid pipe		mm	Φ19.05	Φ19.05	Φ19.05	Φ19.05	Φ19.05
Net weight		kg	425+425	425+425	425+455	425+455	425+455
Gross weight		kg	450+450	450+450	450+480	450+480	450+480

Model(combined unit)			GMV-1910WM/B-X(P)	GMV-1962WM/B-X(P)	GMV-2020WM/B-X(P)	GMV-2080WM/B-X(P)	GMV-2145WM/B-X(P)
Model(single unit)			GMV-900WM/B-X(P)+GMV-1010WM/B-X(P)	GMV-952WM/B-X(P)+GMV-1010WM/B-X(P)	GMV-1010WM/B-X(P)+GMV-1010WM/B-X(P)	GMV-615WM/B-X(P)+GMV-615WM/B-X(P)+GMV-850WM/B-X(P)	GMV-615WM/B-X(P)+GMV-680WM/B-X(P)+GMV-850WM/B-X(P)
Capacity	Cooling	kW	191.00	196.20	202.00	208.00	214.50
	Heating	kW	212.00	218.00	224.00	233.00	240.00
Power input	Cooling	kW	62.30	64.50	67.20	60.62	64.11
	Heating	kW	63.70	65.80	68.40	62.50	65.86
Minimum circuit current		A	58.7+61.8	60.1+61.8	61.8+61.8	46.1+46.1+57.2	46.1+46.1+57.2
Maximum fuse current		A	63+63	63+63	63+63	50+50+63	50+50+63
Power supply		-	380-415V 3N~ 50/60Hz	380-415V 3N~ 50/60Hz	380-415V 3N~ 50/60Hz	380-415V 3N~ 50/60Hz	380-415V 3N~ 50/60Hz
Refrigerant type		-	R410A	R410A	R410A	R410A	R410A
Refrigerant charge		kg	12+12	12+12	12+12	7.8+7.8+11	7.8+7.8+11
Max. number of connectable IDUs		unit	80	80	80	80	80
Gas pipe		mm	Φ44.5	Φ44.5	Φ44.5	Φ44.5	Φ44.5
Liquid pipe		mm	Φ22.2	Φ22.2	Φ22.2	Φ22.2	Φ22.2
Net weight		kg	455+455	455+455	455+455	325+325+425	325+325+425
Gross weight		kg	480+480	480+480	480+480	340+340+450	340+340+450

GMV X DC Inverter VRF Units

Model(combined unit)			GMV-2210WM/B-X(P)	GMV-2240WM/B-X(P)	GMV-2312WM/B-X(P)	GMV-2370WM/B-X(P)	GMV-2430WM/B-X(P)
Model(single unit)			GMV-680WM/B-X(P)+GMV-680WM/B-X(P)+GMV-850WM/B-X(P)	GMV-615WM/B-X(P)+GMV-615WM/B-X(P)+GMV-1010WM/B-X(P)	GMV-680WM/B-X(P)+GMV-680WM/B-X(P)+GMV-952WM/B-X(P)	GMV-680WM/B-X(P)+GMV-680WM/B-X(P)+GMV-1010WM/B-X(P)	GMV-680WM/B-X(P)+GMV-850WM/B-X(P)+GMV-900WM/B-X(P)
Capacity	Cooling	kW	221.00	224.00	231.20	237.00	243.00
	Heating	kW	247.00	250.00	258.00	264.00	271.00
Power input	Cooling	kW	67.60	67.62	71.90	74.60	75.80
	Heating	kW	69.22	69.70	73.82	76.42	77.61
Minimum circuit current		A	46.1+46.1+57.2	46.1+46.1+61.8	46.1+46.1+60.1	46.1+46.1+61.8	46.1+57.2+58.7
Maximum fuse current		A	50+50+63	50+50+63	50+50+63	50+50+63	50+63+63
Power supply		-	380-415V 3N~ 50/60Hz	380-415V 3N~ 50/60Hz	380-415V 3N~ 50/60Hz	380-415V 3N~ 50/60Hz	380-415V 3N~ 50/60Hz
Refrigerant type		-	R410A	R410A	R410A	R410A	R410A
Refrigerant charge		kg	7.8+7.8+11	7.8+7.8+12	7.8+7.8+12	7.8+7.8+12	7.8+11+12
Max. number of connectable IDUs		unit	80	80	80	80	80
Gas pipe		mm	Φ44.5	Φ44.5	Φ44.5	Φ44.5	Φ44.5
Liquid pipe		mm	Φ22.2	Φ22.2	Φ22.2	Φ22.2	Φ22.2
Net weight		kg	325+325+425	325+325+455	325+325+455	325+325+455	325+425+455
Gross weight		kg	340+340+450	340+340+480	340+340+480	340+340+480	340+450+480

Model(combined unit)			GMV-2480WM/B-X(P)	GMV-2532WM/B-X(P)	GMV-2584WM/B-X(P)	GMV-2642WM/B-X(P)	GMV-2700WM/B-X(P)
Model(single unit)			GMV-680WM/B-X(P)+GMV-900WM/B-X(P)+GMV-900WM/B-X(P)	GMV-680WM/B-X(P)+GMV-900WM/B-X(P)+GMV-952WM/B-X(P)	GMV-680WM/B-X(P)+GMV-952WM/B-X(P)+GMV-952WM/B-X(P)	GMV-680WM/B-X(P)+GMV-952WM/B-X(P)+GMV-1010WM/B-X(P)	GMV-680WM/B-X(P)+GMV-1010WM/B-X(P)+GMV-1010WM/B-X(P)
Capacity	Cooling	kW	248.00	253.20	258.40	264.20	270.00
	Heating	kW	276.00	282.00	288.00	294.00	300.00
Power input	Cooling	kW	77.90	80.10	82.30	85.00	87.70
	Heating	kW	80.11	82.21	84.31	86.91	89.51
Minimum circuit current		A	46.1+58.7+58.7	46.1+58.7+60.1	46.1+60.1+60.1	46.1+60.1+61.8	46.1+61.8+61.8
Maximum fuse current		A	50+63+63	50+63+63	50+63+63	50+63+63	50+63+63
Power supply		-	380-415V 3N~ 50/60Hz	380-415V 3N~ 50/60Hz	380-415V 3N~ 50/60Hz	380-415V 3N~ 50/60Hz	380-415V 3N~ 50/60Hz
Refrigerant type		-	R410A	R410A	R410A	R410A	R410A
Refrigerant charge		kg	7.8+12+12	7.8+12+12	7.8+12+12	7.8+12+12	7.8+12+12
Max. number of connectable IDUs		unit	80	80	80	80	80
Gas pipe		mm	Φ44.5	Φ44.5	Φ44.5	Φ44.5	Φ44.5
Liquid pipe		mm	Φ22.2	Φ22.2	Φ22.2	Φ22.2	Φ22.2
Net weight		kg	325+455+455	325+455+455	325+455+455	325+455+455	325+455+455
Gross weight		kg	340+480+480	340+480+480	340+480+480	340+480+480	340+480+480

Model(combined unit)			GMV-2754WM/B-X(P)	GMV-2812WM/B-X(P)	GMV-2870WM/B-X(P)	GMV-2920WM/B-X(P)	GMV-2972WM/B-X(P)
Model(single unit)			GMV-850WM/B-X(P)+GMV-952WM/B-X(P)+GMV-952WM/B-X(P)	GMV-850WM/B-X(P)+GMV-952WM/B-X(P)+GMV-1010WM/B-X(P)	GMV-850WM/B-X(P)+GMV-1010WM/B-X(P)+GMV-1010WM/B-X(P)	GMV-900WM/B-X(P)+GMV-1010WM/B-X(P)+GMV-1010WM/B-X(P)	GMV-952WM/B-X(P)+GMV-1010WM/B-X(P)+GMV-1010WM/B-X(P)
Capacity	Cooling	kW	275.40	281.20	287.00	292.00	297.20
	Heating	kW	307.00	313.00	319.00	324.00	330.00
Power input	Cooling	kW	88.40	91.10	93.80	95.90	98.10
	Heating	kW	90.20	92.80	95.40	97.90	100.00
Minimum circuit current		A	57.2+60.1+60.1	57.2+60.1+61.8	57.2+61.8+61.8	58.7+61.8+61.8	60.1+61.8+61.8
Maximum fuse current		A	63+63+63	63+63+63	63+63+63	63+63+63	63+63+63
Power supply		-	380-415V 3N~ 50/60Hz	380-415V 3N~ 50/60Hz	380-415V 3N~ 50/60Hz	380-415V 3N~ 50/60Hz	380-415V 3N~ 50/60Hz
Refrigerant type		-	R410A	R410A	R410A	R410A	R410A
Refrigerant charge		kg	11+12+12	11+12+12	11+12+12	12+12+12	12+12+12
Max. number of connectable IDUs		unit	80	80	80	80	80
Gas pipe		mm	Φ51.4	Φ51.4	Φ51.4	Φ51.4	Φ51.4
Liquid pipe		mm	Φ25.4	Φ25.4	Φ25.4	Φ25.4	Φ25.4
Net weight		kg	425+455+455	425+455+455	425+455+455	455+455+455	455+455+455
Gross weight		kg	450+480+480	450+480+480	450+480+480	480+480+480	480+480+480

Model(combined unit)			GMV-3030WM/B-X(P)	GMV-3110WM/B-X(P)	GMV-3160WM/B-X(P)	GMV-3195WM/B-X(P)	GMV-3250WM/B-X(P)
Model(single unit)			GMV-1010WM/B-X(P)+GMV-1010WM/B-X(P)+GMV-1010WM/B-X(P)	GMV-680WM/B-X(P)+GMV-680WM/B-X(P)+GMV-850WM/B-X(P)+GMV-900WM/B-X(P)	GMV-680WM/B-X(P)+GMV-680WM/B-X(P)+GMV-900WM/B-X(P)+GMV-900WM/B-X(P)	GMV-560WM/B-X(P)+GMV-615WM/B-X(P)+GMV-1010WM/B-X(P)+GMV-1010WM/B-X(P)	GMV-615WM/B-X(P)+GMV-615WM/B-X(P)+GMV-1010WM/B-X(P)+GMV-1010WM/B-X(P)
Capacity	Cooling	kW	303.00	311.00	316.00	319.50	325.00
	Heating	kW	336.00	347.00	352.00	356.00	362.00
Power input	Cooling	kW	100.80	96.30	98.40	98.70	101.22
	Heating	kW	102.60	98.72	101.22	101.40	103.90
Minimum circuit current		A	61.8+61.8+61.8	46.1+46.1+57.2+58.7	46.1+46.1+58.7+58.7	39.3+46.1+61.8+61.8	46.1+46.1+61.8+61.8
Maximum fuse current		A	63+63+63	50+50+63+63	50+50+63+63	40+50+63+63	50+50+63+63
Power supply		-	380-415V 3N~ 50/60Hz	380-415V 3N~ 50/60Hz	380-415V 3N~ 50/60Hz	380-415V 3N~ 50/60Hz	380-415V 3N~ 50/60Hz
Refrigerant type		-	R410A	R410A	R410A	R410A	R410A
Refrigerant charge		kg	12+12+12	7.8+7.8+11+12	7.8+7.8+12+12	7.5+7.8+12+12	7.8+7.8+12+12
Max. number of connectable IDUs		unit	80	80	80	80	80
Gas pipe		mm	Φ51.4	Φ51.4	Φ51.4	Φ51.4	Φ51.4
Liquid pipe		mm	Φ25.4	Φ25.4	Φ25.4	Φ25.4	Φ25.4
Net weight		kg	455+455+455	325+325+425+455	325+325+455+455	325+325+455+455	325+325+455+455
Gross weight		kg	480+480+480	340+340+450+480	340+340+480+480	340+340+480+480	340+340+480+480

GMV X DC Inverter VRF Units

Model(combined unit)			GMV-3315WM/B-X(P)	GMV-3380WM/B-X(P)	GMV-3430WM/B-X(P)
Model(single unit)			GMV-615WM/B-X(P)+ GMV-680WM/B-X(P)+ GMV-1010WM/B-X(P)+ GMV-1010WM/B-X(P)	GMV-680WM/B-X(P)+ GMV-680WM/B-X(P)+ GMV-1010WM/B-X(P)+ GMV-1010WM/B-X(P)	GMV-730WM/B-X(P)+ GMV-900WM/B-X(P)+ GMV-900WM/B-X(P)+ GMV-900WM/B-X(P)
Capacity	Cooling	kW	331.50	338.00	343.00
	Heating	kW	369.00	376.00	382.50
Power input	Cooling	kW	104.71	108.20	107.60
	Heating	kW	107.26	110.62	110.30
Minimum circuit current		A	46.1+46.1+61.8+61.8	46.1+46.1+61.8+61.8	49.3+58.7+58.7+58.7
Maximum fuse current		A	50+50+63+63	50+50+63+63	63+63+63+63
Power supply		-	380-415V 3N~ 50/60Hz	380-415V 3N~ 50/60Hz	380-415V 3N~ 50/60Hz
Refrigerant type		-	R410A	R410A	R410A
Refrigerant charge		kg	7.8+7.8+12+12	7.8+7.8+12+12	11+12+12+12
Max. number of connectable IDUs		unit	80	80	80
Gas pipe		mm	Φ51.4	Φ51.4	Φ51.4
Liquid pipe		mm	Φ25.4	Φ25.4	Φ25.4
Net weight		kg	325+325+455+455	325+325+455+455	425+455+455+455
Gross weight		kg	340+340+480+480	340+340+480+480	450+480+480+480

Model(combined unit)			GMV-3485WM/B-X(P)	GMV-3550WM/B-X(P)	GMV-3600WM/B-X(P)
Model(single unit)			GMV-785WM/B-X(P)+ GMV-900WM/B-X(P)+ GMV-900WM/B-X(P)+ GMV-900WM/B-X(P)	GMV-850WM/B-X(P)+ GMV-900WM/B-X(P)+ GMV-900WM/B-X(P)+ GMV-900WM/B-X(P)	GMV-900WM/B-X(P)+ GMV-900WM/B-X(P)+ GMV-900WM/B-X(P)+ GMV-900WM/B-X(P)
Capacity	Cooling	kW	348.50	355.00	360.00
	Heating	kW	387.50	395.00	400.00
Power input	Cooling	kW	110.10	112.70	114.80
	Heating	kW	112.80	115.50	118.00
Minimum circuit current		A	52.2+58.7+58.7+58.7	57.2+58.7+58.7+58.7	58.7+58.7+58.7+58.7
Maximum fuse current		A	63+63+63+63	63+63+63+63	63+63+63+63
Power supply		-	380-415V 3N~ 50/60Hz	380-415V 3N~ 50/60Hz	380-415V 3N~ 50/60Hz
Refrigerant type		-	R410A	R410A	R410A
Refrigerant charge		kg	11+12+12+12	11+12+12+12	12+12+12+12
Max. number of connectable IDUs		unit	80	80	80
Gas pipe		mm	Φ51.4	Φ51.4	Φ51.4
Liquid pipe		mm	Φ25.4	Φ25.4	Φ25.4
Net weight		kg	425+455+455+455	425+455+455+455	455+455+455+455
Gross weight		kg	450+480+480+480	450+480+480+480	480+480+480+480

NOTES:

a. Rated cooling capacity test conditions: indoor 27℃ DB/19℃ WB, outdoor 35℃ DB; Connection pipe length: 5 m, without height drop between units

b. Rated heating capacity test conditions: indoor 20℃ DB, outdoor 7℃ DB/6 ℃ WB; Connection pipe length: 5 m, without height drop between units

c. The total capacity of connected indoor units must be in the range of 50%~135% of the outdoor unit capacity. The relevant parameters can be corrected by referring to the unit capacity correction table.

d. The above parameters are tested based on the standard connection pipe length. In the actual project, the parameters should be corrected referring to the capacity correction for the long connection pipe of units.

e. Specifications may be changed due to product improvement. Please refer to nameplates of the

3 ELECTRICAL SPECIFICATIONS

Model	Combination method	Circuit breaker capacity (A) of each combined module	Minimum sectional area of ground lead(mm^2)	Recommended wire (sectional area mm^2×quantity)
GMV-224WM/B-X(P)	-	20	2.5	2.5×5
GMV-280WM/B-X(P)	-	25	2.5	2.5×5
GMV-335WM/B-X(P)	-	25	4.0	4.0×5
GMV-400WM/B-X(P)	-	32	4.0	4.0×5
GMV-450WM/B-X(P)	-	32	4.0	4.0×5
GMV-504WM/B-X(P)	-	40	6.0	6.0×5
GMV-560WM/B-X(P)	-	40	6.0	6.0×5
GMV-615WM/B-X(P)	-	50	10.0	10.0×5
GMV-680WM/B-X(P)	-	50	10.0	10.0×5
GMV-730WM/B-X(P)	-	63	16.0	16.0×5
GMV-785WM/B-X(P)	-	63	16.0	16.0×5
GMV-850WM/B-X(P)	-	63	16.0	16.0×5
GMV-900WM/B-X(P)	-	63	16.0	16.0×5
GMV-952WM/B-X(P)	-	63	16.0	16.0×5
GMV-1010WM/B-X(P)	-	63	16.0	16.0×5
GMV-1065WM/B-X(P)	450+615	32+50	4+10	4.0×5+10.0×5
GMV-1119WM/B-X(P)	504+615	40+50	6+10	6.0×5+10.0×5
GMV-1184WM/B-X(P)	504+680	40+50	6+10	6.0×5+10.0×5
GMV-1230WM/B-X(P)	615+615	50+50	10+10	10.0×5+10.0×5
GMV-1295WM/B-X(P)	615+680	50+50	10+10	10.0×5+10.0×5
GMV-1360WM/B-X(P)	680+680	50+50	10+10	10.0×5+10.0×5
GMV-1410WM/B-X(P)	560+850	40+63	6+16	6.0×5+16.0×5
GMV-1465WM/B-X(P)	615+850	50+63	10+16	10.0×5+16.0×5
GMV-1530WM/B-X(P)	680+850	50+63	10+16	10.0×5+16.0×5
GMV-1580WM/B-X(P)	680+900	50+63	10+16	10.0×5+16.0×5
GMV-1635WM/B-X(P)	785+850	63+63	16+16	16.0×5+16.0×5
GMV-1700WM/B-X(P)	850+850	63+63	16+16	16.0×5+16.0×5
GMV-1750WM/B-X(P)	850+900	63+63	16+16	16.0×5+16.0×5
GMV-1795WM/B-X(P)	785+1010	63+63	16+16	16.0×5+16.0×5
GMV-1860WM/B-X(P)	850+1010	63+63	16+16	16.0×5+16.0×5
GMV-1910WM/B-X(P)	900+1010	63+63	16+16	16.0×5+16.0×5
GMV-1962WM/B-X(P)	952+1010	63+63	16+16	16.0×5+16.0×5
GMV-2020WM/B-X(P)	1010+1010	63+63	16+16	16.0×5+16.0×5
GMV-2080WM/B-X(P)	615+615+850	50+50+63	10+10+16	10.0×5+10.0×5+16.0×5
GMV-2145WM/B-X(P)	615+680+850	50+50+63	10+10+16	10.0×5+10.0×5+16.0×5
GMV-2210WM/B-X(P)	680+680+850	50+50+63	10+10+16	10.0×5+10.0×5+16.0×5
GMV-2240WM/B-X(P)	615+615+1010	50+50+63	10+10+16	10.0×5+10.0×5+16.0×5

Model	Combination method	Circuit breaker capacity (A) of each combined module	Minimum sectional area of ground lead(mm^2)	Recommended wire (sectional area mm^2×quantity)
GMV-2312WM/B-X(P)	680+680+952	50+50+63	10+10+16	10.0×5+10.0×5+16.0×5
GMV-2370WM/B-X(P)	680+680+1010	50+50+63	10+10+16	10.0×5+10.0×5+16.0×5
GMV-2430WM/B-X(P)	680+850+900	50+63+63	10+16+16	10.0×5+16.0×5+16.0×5
GMV-2480WM/B-X(P)	680+900+900	50+63+63	10+16+16	10.0×5+16.0×5+16.0×5
GMV-2532WM/B-X(P)	680+900+952	50+63+63	10+16+16	10.0×5+16.0×5+16.0×5
GMV-2584WM/B-X(P)	680+952+952	50+63+63	10+16+16	10.0×5+16.0×5+16.0×5
GMV-2642WM/B-X(P)	680+952+1010	50+63+63	10+16+16	10.0×5+16.0×5+16.0×5
GMV-2700WM/B-X(P)	680+1010+1010	50+63+63	10+16+16	10.0×5+16.0×5+16.0×5
GMV-2754WM/B-X(P)	850+952+952	63+63+63	16+16+16	16.0×5+16.0×5+16.0×5
GMV-2812WM/B-X(P)	850+952+1010	63+63+63	16+16+16	16.0×5+16.0×5+16.0×5
GMV-2870WM/B-X(P)	850+1010+1010	63+63+63	16+16+16	16.0×5+16.0×5+16.0×5
GMV-2920WM/B-X(P)	900+1010+1010	63+63+63	16+16+16	16.0×5+16.0×5+16.0×5
GMV-2972WM/B-X(P)	952+1010+1010	63+63+63	16+16+16	16.0×5+16.0×5+16.0×5
GMV-3030WM/B-X(P)	1010+1010+1010	63+63+63	16+16+16	16.0×5+16.0×5+16.0×5
GMV-3110WM/B-X(P)	680+680+850+900	50+50+63+63	10+10+16+16	10.0×5+10.0×5+16.0×5+16.0×5
GMV-3160WM/B-X(P)	680+680+900+900	50+50+63+63	10+10+16+16	10.0×5+10.0×5+16.0×5+16.0×5
GMV-3195WM/B-X(P)	560+615+1010+1010	40+50+63+63	6+10+16+16	6.0×5+10.0×5+16.0×5+16.0×5
GMV-3250WM/B-X(P)	615+615+1010+1010	50+50+63+63	10+10+16+16	10.0×5+10.0×5+16.0×5+16.0×5
GMV-3315WM/B-X(P)	615+680+1010+1010	50+50+63+63	10+10+16+16	10.0×5+10.0×5+16.0×5+16.0×5
GMV-3380WM/B-X(P)	680+680+1010+1010	50+50+63+63	10+10+16+16	10.0×5+10.0×5+16.0×5+16.0×5
GMV-3430WM/B-X(P)	730+900+900+900	63+63+63+63	16+16+16+16	16.0×5+16.0×5+16.0×5+16.0×5
GMV-3485WM/B-X(P)	785+900+900+900	63+63+63+63	16+16+16+16	16.0×5+16.0×5+16.0×5+16.0×5
GMV-3550WM/B-X(P)	850+900+900+900	63+63+63+63	16+16+16+16	16.0×5+16.0×5+16.0×5+16.0×5
GMV-3600WM/B-X(P)	900+900+900+900	63+63+63+63	16+16+16+16	16.0×5+16.0×5+16.0×5+16.0×5

NOTES:

a. The circuit breaker and power cable specifications are selected according to the maximum unit power (maximum current).

b. The power cable specifications are obtained under the condition that the multi-copper core cable (such as YJV copper-core XLPE insulated PVC sheathed power cable) is surface mounted in cable trunking (the ambient temperature of use is 40˚C and the cable operating temperature is 90˚C) (IEC60364-5-523). If the working environment is different, calculating and adjusting the specifications according to the relatively applicable local standard.

c. The copper core cable must be used.

d. The engineering wiring should meet the requirements of IEC 60364-5-52 to ensure that the line voltage drop meets the requirements and the voltage is not lower than the lowest limit of the nominal value of equipment.

e. The circuit breaker specification is obtained under the condition that the ambient temperature is 40˚C when the circuit breaker is operating. If the working environment is different, calculating and adjusting the specifications according to the instructions on circuit breaker specifications.

f. The circuit breaker should provide the magnetic trip and thermal trip functions at the same time to ensure protection in the case of short circuit and overload situation.

4 PRODUCT CAPACITY CORRECTION

4.1 Capacity correction method for IDU and ODU

Actual capacity of each IDU=Actual capacity of ODU×IDU capacity/Maximum capacity of IDU operating at the same time

Actual capacity of ODU=corrected capacity based on the connection ratio of IDU and ODU and the indoor and outside temperature condition×the correction coefficient based on the pipe distance and the level difference of IDU and ODU ×correction factor of heating and defrosting

NOTES:

a. corrected capacity based on the connection ratio of IDU and ODU and the indoor and outside temperature condition—inquire according to the capacity correction table

b. Correction factor of heating and defrosting—correct the factor if the model selection is based on heating load.

4.2 Capacity Correction according to ambient temperature and connection ratio

➤ Correction for cooling capacity：

GMV-224WM/B-X(P)

TC—Total capacity of outdoor unit; PI—Power input of outdoor unit															
Connection ratio	Outdoor air temp. (℃ DB)	Indoor air temp.													
		14.0℃ WB		17.0℃ WB		18.0℃ WB		19.0℃ WB		20.0℃ WB		22.0℃ WB		24.0℃ WB	
		20.0℃ DB		24.0℃ DB		26.0℃ DB		27.0℃ DB		28.0℃ DB		30.0℃ DB		32.0℃ DB	
		TC	PI	TC	PI	TC	PI	TC	PI	TC	PI	TC	PI	TC	PI
		kW	kW	kW	kW	kW	kW	kW	kW	kW	kW	kW	kW	kW	kW
135%	-5	19.8	2.18	23.6	2.65	27.4	2.68	28.4	2.70	29.0	2.71	29.7	2.74	30.4	2.77
	0	19.8	2.18	23.6	2.65	27.4	2.69	28.4	2.70	29.0	2.71	29.7	2.75	30.4	2.78
	4	19.8	2.19	23.6	2.66	27.4	2.70	28.4	2.71	29.0	2.72	29.7	2.76	30.4	2.79
	7	19.8	2.23	23.6	2.71	27.4	2.75	28.4	2.76	29.0	2.78	29.7	2.81	30.4	2.84
	10	19.8	2.27	23.6	2.77	27.4	3.30	28.4	3.37	28.8	3.30	29.5	3.16	30.2	3.02
	12	19.8	2.31	23.6	2.82	27.4	3.36	28.0	3.35	28.4	3.28	29.1	3.14	29.8	3.09
	14	19.8	2.35	23.6	2.88	27.3	3.40	27.7	3.34	28.0	3.26	28.8	3.24	29.5	3.27
	16	19.8	2.39	23.6	2.94	27.0	3.39	27.3	3.36	27.6	3.38	28.4	3.41	29.1	3.44
	18	19.8	2.44	23.6	3.00	26.6	3.51	26.9	3.53	27.3	3.55	28.0	3.59	28.8	3.62
	20	19.8	2.49	23.6	3.19	26.2	3.69	26.6	3.71	26.9	3.73	27.6	3.76	28.4	3.80
	21	19.8	2.56	23.6	3.30	26.0	3.77	26.4	3.79	26.7	3.81	27.5	3.85	28.2	3.89
	23	19.8	2.75	23.6	3.54	25.7	3.95	26.0	3.97	26.3	3.99	27.1	4.02	27.8	4.06
	25	19.8	2.93	23.6	3.79	25.3	4.12	25.7	4.14	26.0	4.16	26.7	4.20	27.5	4.24
	27	19.8	3.13	23.6	4.06	25.0	3.63	25.3	4.32	25.6	4.34	26.3	4.38	27.1	4.43
	29	19.8	3.34	23.6	4.34	24.6	4.46	24.9	4.49	25.3	4.52	26.0	4.56	26.7	4.61
	31	19.8	3.57	23.5	4.59	24.2	4.64	24.6	4.67	24.9	4.69	25.6	4.74	26.3	4.79
	33	19.8	3.80	23.1	4.76	23.8	4.81	24.2	4.84	24.6	4.87	25.3	4.92	25.9	4.98
	35	19.8	4.05	22.7	4.93	23.4	4.99	23.8	5.02	24.2	5.05	24.9	5.11	25.6	5.16
	37	19.8	4.31	22.4	5.11	23.1	5.17	23.4	5.20	23.8	5.23	24.5	5.29	25.2	5.35
	39	19.8	4.59	22.0	5.28	22.7	5.34	23.1	5.38	23.4	5.41	24.2	5.47	24.9	5.54
	41	18.7	5.10	21.6	6.22	22.3	6.29	22.7	5.82	23.0	5.85	23.7	5.92	24.4	5.98
	43	17.7	5.32	21.2	6.48	21.8	6.63	22.2	6.19	22.5	6.08	23.2	6.07	23.9	6.13
	44	17.4	5.55	20.4	6.76	21.2	6.99	21.7	6.58	22.1	6.31	22.8	6.23	23.6	6.29
	47	16.4	7.39	19.8	8.99	20.5	7.34	20.9	6.68	21.3	6.71	22.0	6.69	22.8	6.76
	50	15.1	7.25	17.7	8.83	18.3	7.74	18.7	7.23	19.0	7.17	19.7	7.15	20.5	7.07
	52	9.6	4.29	12.9	5.34	16.0	6.01	17.6	6.31	17.7	6.11	18.1	6.02	19.2	6.18

GMV X DC Inverter VRF Units

TC—Total capacity of outdoor unit; PI—Power input of outdoor unit															
Connection ratio	Outdoor air temp. (℃ DB)	Indoor air temp.													
		14.0℃ WB		17.0℃ WB		18.0℃ WB		19.0℃ WB		20.0℃ WB		22.0℃ WB		24.0℃ WB	
		20.0℃ DB		24.0℃ DB		26.0℃ DB		27.0℃ DB		28.0℃ DB		30.0℃ DB		32.0℃ DB	
		TC	PI	TC	PI	TC	PI	TC	PI	TC	PI	TC	PI	TC	PI
		kW	kW	kW	kW	kW	kW	kW	kW	kW	kW	kW	kW	kW	kW
120%	-5	18.3	1.94	21.8	2.51	25.3	2.66	27.1	2.68	28.5	2.69	29.1	2.72	29.8	2.75
	0	18.3	1.94	21.8	2.51	25.3	2.67	27.1	2.68	28.5	2.70	29.1	2.73	29.8	2.75
	4	18.3	1.95	21.8	2.52	25.3	2.68	27.1	2.69	28.5	2.71	29.1	2.74	29.8	2.76
	7	18.3	1.98	21.8	2.57	25.3	2.73	27.1	2.74	28.5	2.76	29.1	2.79	29.8	2.82
	10	18.3	2.07	21.8	2.53	25.3	3.00	27.1	3.25	28.4	3.39	29.0	3.26	29.6	3.13
	12	18.3	2.11	21.8	2.57	25.3	3.06	27.1	3.31	28.0	3.37	28.6	3.24	29.2	3.11
	14	18.3	2.15	21.8	2.63	25.3	3.12	27.1	3.38	27.6	3.35	28.3	3.22	28.9	3.24
	16	18.3	2.19	21.8	2.68	25.3	3.18	26.9	3.40	27.2	3.36	27.9	3.39	28.5	3.41
	18	18.3	2.23	21.8	2.73	25.3	3.30	26.5	3.51	26.8	3.53	27.5	3.56	28.2	3.59
	20	18.3	2.27	21.8	2.84	25.3	3.54	26.2	3.69	26.5	3.70	27.1	3.73	27.8	3.77
	21	18.3	2.29	21.8	2.94	25.3	3.67	25.9	3.77	26.3	3.79	27.0	3.82	27.6	3.86
	23	18.3	2.45	21.8	3.15	25.3	3.93	25.6	3.94	25.9	3.96	26.6	4.00	27.2	4.03
	25	18.3	2.62	21.8	3.37	24.9	4.10	25.2	4.11	25.5	4.13	26.3	4.17	26.9	4.21
	27	18.3	2.80	21.8	3.60	24.6	4.26	24.9	4.29	25.2	4.31	25.9	4.35	26.5	4.39
	29	18.3	2.98	21.8	3.85	24.2	4.44	24.5	4.46	24.8	4.48	25.5	4.53	26.2	4.57
	31	18.3	3.18	21.8	4.10	23.8	4.61	24.2	4.63	24.5	4.66	25.1	4.71	25.8	4.75
	33	18.3	3.39	21.8	4.38	23.4	4.79	23.8	4.81	24.1	4.83	24.7	4.89	25.4	4.93
	35	18.3	3.61	21.8	4.67	23.0	4.96	23.4	4.99	23.8	5.01	24.4	5.07	25.1	5.12
	37	18.3	3.84	21.8	4.97	22.7	5.14	23.0	5.17	23.4	5.19	24.0	5.24	24.7	5.30
	39	18.3	4.08	21.7	5.25	22.3	5.31	22.6	5.34	23.0	5.37	23.7	5.43	24.3	5.48
	41	17.3	4.54	20.7	5.88	21.9	6.25	22.2	5.78	22.6	5.81	23.2	5.88	23.9	5.94
	43	16.3	4.74	19.7	6.13	21.5	6.59	21.8	6.15	22.2	6.04	22.8	6.03	23.4	6.09
	44	16.1	4.94	19.6	6.40	20.9	6.94	21.3	6.53	21.7	6.27	22.4	6.18	23.0	6.25
	47	15.2	6.58	18.9	8.51	20.2	7.29	20.5	6.63	20.9	6.67	21.6	6.64	22.3	6.71
	50	13.9	6.46	17.0	8.36	18.0	7.69	18.3	7.18	18.7	7.12	19.3	7.09	20.0	7.01
	52	9.4	4.26	12.7	5.31	15.7	5.97	17.3	6.27	17.4	6.06	17.8	5.98	18.8	6.14
110%	-5	16.8	1.71	20.0	2.20	23.2	2.65	24.8	2.66	26.4	2.67	28.5	2.70	29.1	2.72
	0	16.8	1.72	20.0	2.21	23.2	2.65	24.8	2.66	26.4	2.68	28.5	2.70	29.1	2.73
	4	16.8	1.72	20.0	2.22	23.2	2.66	24.8	2.67	26.4	2.69	28.5	2.71	29.1	2.74
	7	16.8	1.75	20.0	2.26	23.2	2.71	24.8	2.72	26.4	2.74	28.5	2.76	29.1	2.79
	10	16.8	1.88	20.0	2.29	23.2	2.72	24.8	2.94	26.4	3.16	28.4	3.36	29.1	3.24
	12	16.8	1.92	20.0	2.33	23.2	2.77	24.8	3.00	26.4	3.22	28.1	3.34	28.7	3.22
	14	16.8	1.95	20.0	2.37	23.2	2.82	24.8	3.05	26.4	3.28	27.7	3.34	28.4	3.22
	16	16.8	1.98	20.0	2.42	23.2	2.88	24.8	3.11	26.4	3.35	27.4	3.36	28.0	3.39
	18	16.8	2.02	20.0	2.47	23.2	2.94	24.8	3.20	26.4	3.51	27.0	3.53	27.6	3.57
	20	16.8	2.06	20.0	2.52	23.2	3.11	24.8	3.43	26.0	3.68	26.7	3.71	27.2	3.74
	21	16.8	2.08	20.0	2.59	23.2	3.22	24.8	3.56	25.9	3.77	26.4	3.79	27.1	3.83
	23	16.8	2.18	20.0	2.78	23.2	3.45	24.8	3.82	25.5	3.93	26.1	3.97	26.7	4.00
	25	16.8	2.32	20.0	2.97	23.2	3.69	24.8	4.09	25.1	4.10	25.7	4.14	26.3	4.18
	27	16.8	2.48	20.0	3.18	23.2	3.95	24.4	4.26	24.7	4.28	25.4	4.32	25.9	4.36
	29	16.8	2.65	20.0	3.39	23.2	4.22	24.1	4.44	24.4	4.46	25.0	4.50	25.6	4.54
	31	16.8	2.82	20.0	3.61	23.2	4.51	23.7	4.61	24.0	4.63	24.7	4.67	25.2	4.71
	33	16.8	3.00	20.0	3.85	23.0	4.75	23.4	4.78	23.7	4.80	24.2	4.85	24.9	4.89
	35	16.8	3.19	20.0	4.10	22.7	4.93	23.0	4.95	23.3	4.98	23.8	5.03	24.5	5.07
	37	16.8	3.39	20.0	4.37	22.3	5.11	22.6	5.13	22.9	5.15	23.5	5.21	24.1	5.25
	39	16.8	3.61	20.0	4.65	21.9	5.28	22.2	5.30	22.6	5.33	23.1	5.38	23.8	5.44
	41	15.8	4.02	19.0	5.17	21.6	6.21	21.8	5.75	22.1	5.78	22.7	5.83	23.3	5.88
	43	15.0	4.19	18.0	5.39	21.3	6.54	21.4	6.11	21.7	6.00	22.3	5.98	22.9	6.03
	44	14.7	4.37	18.0	5.62	20.6	6.90	20.9	6.49	21.3	6.22	21.8	6.13	22.5	6.19
	47	13.9	5.81	17.4	7.48	19.9	7.24	20.2	6.59	20.5	6.62	21.1	6.58	21.8	6.64
	50	12.7	5.71	15.6	7.35	17.7	7.64	18.0	7.13	18.3	7.07	18.8	7.04	19.6	6.95
	52	9.3	4.24	12.5	5.27	15.4	5.93	17.0	6.23	17.1	6.02	17.5	5.94	18.4	6.10

TC—Total capacity of outdoor unit; PI—Power input of outdoor unit															
Connection ratio	Outdoor air temp. (℃ DB)	Indoor air temp.													
		14.0℃ WB 20.0℃ DB		17.0℃ WB 24.0℃ DB		18.0℃ WB 26.0℃ DB		19.0℃ WB 27.0℃ DB		20.0℃ WB 28.0℃ DB		22.0℃ WB 30.0℃ DB		24.0℃ WB 32.0℃ DB	
		TC	PI	TC	PI	TC	PI	TC	PI	TC	PI	TC	PI	TC	PI
		kW	kW	kW	kW	kW	kW	kW	kW	kW	kW	kW	kW	kW	kW
100%	-5	15.2	1.50	18.1	1.92	21.1	2.39	22.4	2.64	24.0	2.66	27.0	2.68	28.5	2.70
	0	15.2	1.50	18.1	1.92	21.1	2.40	22.4	2.65	24.0	2.66	27.0	2.68	28.5	2.71
	4	15.2	1.51	18.1	1.93	21.1	2.40	22.4	2.66	24.0	2.67	27.0	2.69	28.5	2.72
	7	15.2	1.53	18.1	1.96	21.1	2.45	22.4	2.71	24.0	2.72	27.0	2.74	28.5	2.77
	10	15.2	1.70	18.1	2.06	21.1	2.44	22.4	2.63	24.0	2.84	27.0	3.22	28.5	3.35
	12	15.2	1.72	18.1	2.09	21.1	2.47	22.4	2.67	24.0	2.90	27.0	3.27	28.1	3.32
	14	15.2	1.75	18.1	2.13	21.1	2.51	22.4	2.72	24.0	2.95	27.0	3.33	27.8	3.29
	16	15.2	1.79	18.1	2.17	21.1	2.57	22.4	2.78	24.0	3.02	26.9	3.41	27.4	3.37
	18	15.2	1.83	18.1	2.22	21.1	2.62	22.4	2.83	24.0	3.08	26.5	3.47	27.1	3.52
	20	15.2	1.86	18.1	2.26	21.1	2.71	22.4	2.98	24.0	3.27	26.1	3.65	26.7	3.71
	21	15.2	1.88	18.1	2.28	21.1	2.80	22.4	3.08	24.0	3.39	25.9	3.78	26.5	3.81
	23	15.2	1.92	18.1	2.43	21.1	3.01	22.4	3.32	24.0	3.64	25.6	4.00	26.1	4.04
	25	15.2	2.05	18.1	2.59	21.1	3.20	22.4	3.53	24.0	3.89	25.2	4.14	25.8	4.18
	27	15.2	2.19	18.1	2.77	21.1	3.44	22.4	3.78	24.0	4.18	24.8	4.29	25.4	4.33
	29	15.2	2.32	18.1	2.96	21.1	3.67	22.4	4.05	23.9	4.42	24.5	4.50	25.0	4.54
	31	15.2	2.46	18.1	3.15	21.1	3.92	22.4	4.36	23.6	4.60	23.9	4.68	24.7	4.72
	33	15.2	2.62	18.1	3.35	21.1	4.18	22.4	4.61	23.2	4.77	23.8	4.81	24.3	4.86
	35	15.2	2.79	18.1	3.57	21.1	4.45	22.4	4.92	22.8	4.94	23.3	4.99	23.9	5.03
	37	15.2	2.97	18.1	3.80	21.1	4.74	22.2	5.10	22.5	5.12	23.0	5.16	23.6	5.21
	39	15.2	3.16	18.1	4.05	21.1	5.05	21.9	5.27	22.0	5.29	22.7	5.33	23.0	5.38
	41	14.4	3.51	17.2	4.50	20.1	5.61	21.4	5.71	21.7	5.74	22.2	5.79	22.8	5.84
	43	13.6	3.66	16.4	4.69	19.6	5.91	21.0	6.07	21.4	5.95	21.7	5.94	22.6	5.99
	44	13.4	3.82	16.3	4.89	19.1	6.23	20.5	6.45	20.8	6.18	21.4	6.09	22.0	6.14
	47	12.6	5.08	15.8	6.51	18.5	6.55	19.8	6.54	20.1	6.58	20.7	6.54	21.3	6.59
	50	11.6	4.99	14.1	6.39	16.5	6.90	17.7	7.08	17.9	7.02	18.4	6.98	19.1	6.90
	52	9.1	3.86	12.2	4.80	15.1	5.40	16.7	5.67	16.8	5.48	17.2	5.41	18.1	5.55
90%	-5	13.7	1.31	16.3	1.65	19.0	2.04	20.3	2.26	21.6	2.48	24.2	2.66	26.9	2.68
	0	13.7	1.31	16.3	1.66	19.0	2.05	20.3	2.26	21.6	2.49	24.2	2.66	26.9	2.68
	4	13.7	1.31	16.3	1.66	19.0	2.05	20.3	2.27	21.6	2.50	24.2	2.67	26.9	2.69
	7	13.7	1.34	16.3	1.69	19.0	2.09	20.3	2.31	21.6	2.54	24.2	2.72	26.9	2.74
	10	13.7	1.48	16.3	1.78	19.0	2.08	20.3	2.35	21.6	2.50	24.3	2.86	26.9	3.24
	12	13.7	1.50	16.3	1.80	19.0	2.11	20.3	2.38	21.6	2.55	24.3	2.91	26.9	3.29
	14	13.7	1.53	16.3	1.83	19.0	2.15	20.3	2.41	21.6	2.59	24.3	2.96	26.9	3.34
	16	13.7	1.56	16.3	1.87	19.0	2.20	20.3	2.47	21.6	2.65	24.3	3.03	26.8	3.40
	18	13.7	1.60	16.3	1.92	19.0	2.24	20.3	2.52	21.6	2.70	24.3	3.10	26.6	3.53
	20	13.7	1.62	16.3	1.95	19.0	2.31	20.3	2.57	21.6	2.81	24.3	3.33	26.1	3.67
	21	13.7	1.64	16.3	1.97	19.0	2.39	20.3	2.65	21.6	2.91	24.3	3.44	25.9	3.76
	23	13.7	1.68	16.3	2.10	19.0	2.57	20.3	2.85	21.6	3.11	24.3	3.70	25.5	3.95
	25	13.7	1.79	16.3	2.23	19.0	2.73	20.3	3.04	21.6	3.33	24.3	3.96	25.2	4.11
	27	13.7	1.91	16.3	2.39	19.0	2.93	20.3	3.25	21.6	3.57	24.3	4.22	24.8	4.29
	29	13.7	2.02	16.3	2.55	19.0	3.14	20.3	3.47	21.6	3.81	24.0	4.43	24.5	4.47
	31	13.7	2.15	16.3	2.72	19.0	3.35	20.3	3.70	21.6	4.06	23.6	4.59	24.1	4.65
	33	13.7	2.29	16.3	2.89	19.0	3.57	20.3	3.94	21.6	4.32	23.3	4.77	23.8	4.82
	35	13.7	2.43	16.3	3.08	19.0	3.80	20.3	4.20	21.6	4.62	22.9	4.95	23.4	4.99
	37	13.7	2.59	16.3	3.28	19.0	4.05	19.9	4.35	21.6	4.95	22.5	5.12	23.0	5.11
	39	13.7	2.76	16.3	3.49	19.0	4.31	19.7	4.50	21.6	5.24	22.2	5.31	22.6	5.30
	41	12.9	3.07	15.5	3.88	18.0	4.79	19.3	4.87	20.5	5.36	21.8	5.74	22.3	5.79
	43	12.2	3.20	14.7	4.04	17.6	5.05	18.9	5.18	20.1	5.57	21.4	5.88	21.9	5.95
	44	12.1	3.33	14.7	4.22	17.2	5.32	18.5	5.50	19.7	5.78	21.0	6.03	21.5	6.09
	47	11.4	4.44	14.2	5.61	16.6	5.59	17.8	5.59	19.0	6.15	20.2	6.48	20.8	6.54
	50	10.4	4.36	12.7	5.51	14.8	5.89	15.9	6.05	17.0	6.56	18.1	6.92	18.7	6.84
	52	8.2	3.59	11.0	4.48	13.6	5.04	15.0	5.29	15.1	5.11	15.6	5.04	16.3	5.18

GMV X DC Inverter VRF Units

TC—Total capacity of outdoor unit; PI—Power input of outdoor unit															
Connection ratio	Outdoor air temp. (℃ DB)	Indoor air temp.													
		14.0℃ WB		17.0℃ WB		18.0℃ WB		19.0℃ WB		20.0℃ WB		22.0℃ WB		24.0℃ WB	
		20.0℃ DB		24.0℃ DB		26.0℃ DB		27.0℃ DB		28.0℃ DB		30.0℃ DB		32.0℃ DB	
		TC	PI	TC	PI	TC	PI	TC	PI	TC	PI	TC	PI	TC	PI
		kW	kW	kW	kW	kW	kW	kW	kW	kW	kW	kW	kW	kW	kW
80%	-5	12.2	1.13	14.5	1.39	16.9	1.73	18.0	1.90	19.2	2.08	21.6	2.47	23.9	2.65
	0	12.2	1.13	14.5	1.39	16.9	1.73	18.0	1.91	19.2	2.09	21.6	2.48	23.9	2.65
	4	12.2	1.14	14.5	1.40	16.9	1.74	18.0	1.92	19.2	2.09	21.6	2.49	23.9	2.66
	7	12.2	1.16	14.5	1.43	16.9	1.77	18.0	1.95	19.2	2.13	21.6	2.53	23.9	2.71
	10	12.2	1.35	14.5	1.61	16.9	1.90	18.0	2.04	19.2	2.19	21.6	2.50	23.9	2.90
	12	12.2	1.37	14.5	1.64	16.9	1.93	18.0	2.08	19.2	2.23	21.6	2.54	23.9	2.88
	14	12.2	1.39	14.5	1.67	16.9	1.96	18.0	2.12	19.2	2.27	21.6	2.59	23.9	2.94
	16	12.2	1.41	14.5	1.70	16.9	2.00	18.0	2.15	19.2	2.30	21.6	2.64	23.9	3.05
	18	12.2	1.44	14.5	1.73	16.9	2.05	18.0	2.20	19.2	2.35	21.6	2.70	23.9	3.26
	20	12.2	1.47	14.5	1.76	16.9	2.08	18.0	2.24	19.2	2.40	21.6	2.80	23.9	3.38
	21	12.2	1.48	14.5	1.78	16.9	2.10	18.0	2.27	19.2	2.46	21.6	2.90	23.9	3.62
	23	12.2	1.51	14.5	1.82	16.9	2.20	18.0	2.41	19.2	2.63	21.6	3.10	23.9	3.87
	25	12.2	1.55	14.5	1.93	16.9	2.35	18.0	2.58	19.2	2.80	21.6	3.32	23.9	4.13
	27	12.2	1.65	14.5	2.06	16.9	2.51	18.0	2.75	19.2	3.01	21.6	3.55	23.9	4.28
	29	12.2	1.76	14.5	2.19	16.9	2.67	18.0	2.93	19.1	3.21	21.6	3.79	23.9	4.43
	31	12.2	1.86	14.5	2.33	16.9	2.84	18.0	3.12	19.1	3.42	21.6	4.04	23.5	4.59
	33	12.2	1.98	14.5	2.59	16.9	3.03	18.0	3.33	19.1	3.64	21.6	4.31	23.2	4.76
	35	12.2	2.10	14.5	2.59	16.9	3.22	18.0	3.55	19.1	3.88	21.6	4.60	22.8	4.93
	37	12.2	2.23	14.5	2.79	16.9	3.43	17.7	3.78	19.1	4.13	21.6	4.90	22.5	5.11
	39	12.2	2.36	14.5	2.96	16.9	3.65	17.5	4.02	19.1	4.40	21.6	5.22	22.1	5.30
	41	11.5	2.65	13.8	3.27	16.0	4.06	17.2	4.11	18.2	4.50	20.5	5.34	21.7	5.72
	43	10.9	2.76	13.4	3.41	15.6	4.28	16.8	4.37	17.8	4.67	20.1	5.48	21.4	5.87
	44	10.7	2.88	13.1	3.55	15.3	4.51	16.4	4.65	17.5	4.85	19.8	5.61	21.0	6.02
	47	10.1	3.83	12.6	4.73	14.8	4.74	15.8	4.72	16.8	5.16	19.1	6.03	20.3	6.46
	50	9.3	3.76	11.3	4.64	13.2	4.99	14.1	5.11	15.0	5.51	17.1	6.44	18.2	6.76
	52	7.3	3.03	9.8	3.78	12.1	4.25	13.3	4.46	13.4	4.31	13.7	4.26	14.5	4.37
70%	-5	10.7	0.96	12.7	1.19	14.8	1.44	15.8	1.58	16.8	1.72	18.9	2.03	20.9	2.36
	0	10.7	0.96	12.7	1.19	14.8	1.44	15.8	1.58	16.8	1.73	18.9	2.03	20.9	2.37
	4	10.7	0.97	12.7	1.20	14.8	1.45	15.8	1.59	16.8	1.73	18.9	2.04	20.9	2.37
	7	10.7	0.98	12.7	1.22	14.8	1.48	15.8	1.62	16.8	1.77	18.9	2.08	20.9	2.42
	10	10.7	1.19	12.7	1.41	14.8	1.64	15.8	1.76	16.8	1.89	18.9	2.15	20.9	2.41
	12	10.7	1.20	12.7	1.43	14.8	1.67	15.8	1.80	16.8	1.92	18.9	2.19	20.9	2.46
	14	10.7	1.22	12.7	1.45	14.8	1.70	15.8	1.82	16.8	1.96	18.9	2.23	20.9	2.51
	16	10.7	1.24	12.7	1.48	14.8	1.73	15.8	1.86	16.8	2.00	18.9	2.27	20.9	2.55
	18	10.7	1.26	12.7	1.51	14.8	1.76	15.8	1.90	16.8	2.03	18.9	2.31	20.9	2.61
	20	10.7	1.28	12.7	1.53	14.8	1.80	15.8	1.93	16.8	2.07	18.9	2.36	20.9	2.68
	21	10.7	1.29	12.7	1.54	14.8	1.81	15.8	1.95	16.8	2.09	18.9	2.39	20.9	2.77
	23	10.7	1.31	12.7	1.57	14.8	1.85	15.8	2.02	16.8	2.19	18.9	2.57	20.9	2.97
	25	10.7	1.34	12.7	1.64	14.8	1.97	15.8	2.15	16.8	2.34	18.9	2.75	20.9	3.18
	27	10.7	1.42	12.7	1.74	14.8	2.10	15.8	2.29	16.8	2.50	18.9	2.93	20.9	3.39
	29	10.7	1.51	12.7	1.85	14.8	2.23	15.8	2.45	16.8	2.66	18.9	3.12	20.9	3.63
	31	10.7	1.59	12.7	1.96	14.8	2.38	15.8	2.60	16.8	2.83	18.9	3.33	20.9	3.87
	33	10.7	1.69	12.7	2.09	14.8	2.53	15.8	2.77	16.8	3.02	18.9	3.55	20.9	4.12
	35	10.7	1.79	12.7	2.21	14.8	2.69	15.8	2.94	16.8	3.21	18.9	3.78	20.9	4.40
	37	10.7	1.89	12.7	2.35	14.8	2.86	15.5	3.13	16.8	3.41	18.9	4.02	20.9	4.68
	39	10.7	2.00	12.7	2.49	14.8	3.03	15.3	3.32	16.8	3.63	18.9	4.28	20.9	4.99
	41	10.1	2.26	12.1	2.79	14.0	3.38	15.0	3.42	16.0	3.72	18.0	4.38	20.0	5.10
	43	9.5	2.35	11.7	2.91	13.5	3.57	14.7	3.63	15.2	3.86	17.6	4.49	19.4	5.23
	44	9.4	2.45	11.4	3.03	13.4	3.76	14.4	3.86	15.3	4.01	17.3	4.61	19.3	5.36
	47	8.8	3.26	11.0	4.04	12.9	3.95	13.9	3.92	14.8	4.27	16.7	4.95	18.6	5.76
	50	8.1	3.20	9.9	3.96	11.5	4.16	12.4	4.24	13.2	4.56	14.9	5.29	16.8	6.02
	52	6.4	2.52	8.6	3.13	10.6	3.49	11.7	3.70	11.7	3.58	12.0	3.53	12.7	3.63

TC—Total capacity of outdoor unit; PI—Power input of outdoor unit															
Connection ratio	Outdoor air temp. (℃ DB)	Indoor air temp.													
		14.0℃ WB		17.0℃ WB		18.0℃ WB		19.0℃ WB		20.0℃ WB		22.0℃ WB		24.0℃ WB	
		20.0℃ DB		24.0℃ DB		26.0℃ DB		27.0℃ DB		28.0℃ DB		30.0℃ DB		32.0℃ DB	
		TC	PI	TC	PI	TC	PI	TC	PI	TC	PI	TC	PI	TC	PI
		kW	kW	kW	kW	kW	kW	kW	kW	kW	kW	kW	kW	kW	kW
60%	-5	9.1	0.81	10.9	0.99	12.7	1.18	13.5	1.29	14.4	1.40	16.2	1.63	18.0	1.89
	0	9.1	0.81	10.9	0.99	12.7	1.18	13.5	1.29	14.4	1.40	16.2	1.64	18.0	1.89
	4	9.1	0.81	10.9	0.99	12.7	1.19	13.5	1.30	14.4	1.41	16.2	1.64	18.0	1.90
	7	9.1	0.83	10.9	1.01	12.7	1.21	13.5	1.32	14.4	1.43	16.2	1.67	18.0	1.93
	10	9.1	1.03	10.9	1.21	12.7	1.40	13.5	1.50	14.4	1.60	16.2	1.81	18.0	2.03
	12	9.1	1.05	10.9	1.23	12.7	1.43	13.5	1.53	14.4	1.62	16.2	1.84	18.0	2.06
	14	9.1	1.06	10.9	1.25	12.7	1.45	13.5	1.55	14.4	1.66	16.2	1.88	18.0	2.10
	16	9.1	1.07	10.9	1.27	12.7	1.47	13.5	1.58	14.4	1.68	16.2	1.91	18.0	2.14
	18	9.1	1.09	10.9	1.29	12.7	1.50	13.5	1.60	14.4	1.72	16.2	1.94	18.0	2.18
	20	9.1	1.11	10.9	1.31	12.7	1.53	13.5	1.64	14.4	1.75	16.2	1.98	18.0	2.23
	21	9.1	1.12	10.9	1.32	12.7	1.54	13.5	1.65	14.4	1.76	16.2	2.00	18.0	2.25
	23	9.1	1.13	10.9	1.35	12.7	1.56	13.5	1.68	14.4	1.80	16.2	2.08	18.0	2.39
	25	9.1	1.15	10.9	1.37	12.7	1.62	13.5	1.76	14.4	1.91	16.2	2.22	18.0	2.55
	27	9.1	1.20	10.9	1.45	12.7	1.73	13.5	1.88	14.4	2.04	16.2	2.37	18.0	2.73
	29	9.1	1.27	10.9	1.54	12.7	1.84	13.5	2.00	14.4	2.17	16.2	2.53	18.0	2.91
	31	9.1	1.35	10.9	1.64	12.7	1.96	13.5	2.13	14.4	2.31	16.2	2.69	18.0	3.10
	33	9.1	1.42	10.9	1.73	12.7	2.08	13.5	2.26	14.4	2.45	16.2	2.86	18.0	3.30
	35	9.1	1.51	10.9	1.84	12.7	2.20	13.5	2.40	14.4	2.61	16.2	3.04	18.0	3.51
	37	9.1	1.59	10.9	1.94	12.7	2.33	13.3	2.55	14.4	2.77	16.2	3.24	18.0	3.74
	39	9.1	1.68	10.9	2.06	12.7	2.47	13.1	2.70	14.4	2.94	16.2	3.43	18.0	3.98
	41	8.6	1.90	10.3	2.31	12.0	2.77	12.9	2.78	13.7	3.02	15.4	3.53	17.1	4.08
	43	8.2	1.98	9.8	2.41	11.7	2.92	12.6	2.96	13.3	3.14	15.2	3.62	16.8	4.18
	44	8.0	2.06	9.8	2.52	11.5	3.08	12.3	3.14	13.1	3.26	14.8	3.71	16.5	4.29
	47	7.6	2.74	9.5	3.35	11.1	3.24	11.9	3.19	12.7	3.47	14.3	3.99	16.0	4.60
	50	6.9	2.69	8.5	3.29	9.9	3.41	10.6	3.46	11.3	3.70	12.8	4.26	14.4	4.81
	52	5.5	2.05	7.3	2.56	9.1	2.88	10.0	3.02	10.1	2.92	10.3	2.88	10.9	2.96
50%	-5	7.6	0.67	9.1	0.80	10.6	0.95	11.3	1.03	12.0	1.11	13.5	1.28	15.0	1.47
	0	7.6	0.67	9.1	0.80	10.6	0.95	11.3	1.03	12.0	1.11	13.5	1.28	15.0	1.47
	4	7.6	0.67	9.1	0.81	10.6	0.95	11.3	1.03	12.0	1.11	13.5	1.29	15.0	1.48
	7	7.6	0.69	9.1	0.82	10.6	0.97	11.3	1.05	12.0	1.13	13.5	1.31	15.0	1.50
	10	7.6	0.89	9.1	1.03	10.6	1.17	11.3	1.25	12.0	1.33	13.5	1.49	15.0	1.66
	12	7.6	0.90	9.1	1.04	10.6	1.19	11.3	1.27	12.0	1.35	13.5	1.52	15.0	1.69
	14	7.6	0.91	9.1	1.05	10.6	1.21	11.3	1.29	12.0	1.37	13.5	1.54	15.0	1.72
	16	7.6	0.92	9.1	1.07	10.6	1.23	11.3	1.31	12.0	1.39	13.5	1.57	15.0	1.75
	18	7.6	0.93	9.1	1.09	10.6	1.25	11.3	1.33	12.0	1.42	13.5	1.60	15.0	1.78
	20	7.6	0.95	9.1	1.10	10.6	1.27	11.3	1.36	12.0	1.45	13.5	1.63	15.0	1.82
	21	7.6	0.95	9.1	1.11	10.6	1.28	11.3	1.37	12.0	1.46	13.5	1.64	15.0	1.84
	23	7.6	0.97	9.1	1.13	10.6	1.30	11.3	1.39	12.0	1.49	13.5	1.67	15.0	1.88
	25	7.6	0.98	9.1	1.15	10.6	1.33	11.3	1.42	12.0	1.53	13.5	1.76	15.0	2.00
	27	7.6	1.00	9.1	1.19	10.6	1.40	11.3	1.51	12.0	1.62	13.5	1.87	15.0	2.14
	29	7.6	1.05	9.1	1.26	10.6	1.49	11.3	1.60	12.0	1.73	13.5	1.99	15.0	2.27
	31	7.6	1.11	9.1	1.33	10.6	1.58	11.3	1.70	12.0	1.84	13.5	2.12	15.0	2.42
	33	7.6	1.18	9.1	1.41	10.6	1.67	11.3	1.80	12.0	1.95	13.5	2.25	15.0	2.57
	35	7.6	1.25	9.1	1.49	10.6	1.76	11.3	1.91	12.0	2.06	13.5	2.39	15.0	2.73
	37	7.6	1.31	9.1	1.58	10.6	1.87	11.1	2.02	12.0	2.19	13.5	2.53	15.0	2.90
	39	7.6	1.39	9.1	1.66	10.6	1.98	10.9	2.14	12.0	2.32	13.5	2.69	15.0	3.08
	41	7.2	1.57	8.6	1.88	10.0	2.22	10.7	2.22	11.4	2.39	12.8	2.77	14.3	3.17
	43	6.8	1.64	8.2	1.97	9.7	2.34	10.5	2.37	11.2	2.48	12.5	2.84	13.9	3.25
	44	6.7	1.71	8.2	2.04	9.6	2.47	10.3	2.50	10.9	2.58	12.4	2.91	13.8	3.33
	47	6.3	2.27	7.9	2.72	9.2	2.59	9.9	2.54	10.5	2.74	11.9	3.13	13.3	3.58
	50	5.8	2.23	7.1	2.67	8.2	2.73	8.8	2.75	9.4	2.93	10.7	3.34	12.0	3.74
	52	4.6	1.63	6.1	2.03	7.6	2.29	8.3	2.40	8.4	2.32	8.6	2.29	9.1	2.35

GMV-280WM/B-X(P)

TC—Total capacity of outdoor unit; PI—Power input of outdoor unit															
Connection ratio	Outdoor air temp. (℃ DB)	Indoor air temp.													
		14.0℃ WB		17.0℃ WB		18.0℃ WB		19.0℃ WB		20.0℃ WB		22.0℃ WB		24.0℃ WB	
		20.0℃ DB		24.0℃ DB		26.0℃ DB		27.0℃ DB		28.0℃ DB		30.0℃ DB		32.0℃ DB	
		TC	PI	TC	PI	TC	PI	TC	PI	TC	PI	TC	PI	TC	PI
		kW	kW	kW	kW	kW	kW	kW	kW	kW	kW	kW	kW	kW	kW
135%	-5	24.8	2.88	29.5	3.51	34.2	3.55	35.5	3.57	36.2	3.59	37.1	3.63	38.0	3.67
	0	24.8	2.88	29.5	3.51	34.2	3.55	35.5	3.57	36.2	3.59	37.1	3.63	38.0	3.67
	4	24.8	2.89	29.5	3.52	34.2	3.57	35.5	3.59	36.2	3.61	37.1	3.65	38.0	3.69
	7	24.8	2.95	29.5	3.59	34.2	3.63	35.5	3.65	36.2	3.67	37.1	3.72	38.0	3.75
	10	24.8	3.00	29.5	3.67	34.2	4.36	35.5	4.46	35.9	4.37	36.9	4.19	37.8	3.99
	12	24.8	3.05	29.5	3.74	34.2	4.45	35.0	4.43	35.5	4.34	36.4	4.15	37.3	4.09
	14	24.8	3.11	29.5	3.81	34.1	4.50	34.6	4.41	35.0	4.32	35.9	4.28	36.9	4.33
	16	24.8	3.17	29.5	3.89	33.7	4.48	34.1	4.45	34.5	4.47	35.4	4.51	36.4	4.55
	18	24.8	3.23	29.5	3.97	33.2	4.65	33.6	4.68	34.1	4.70	35.0	4.75	35.9	4.79
	20	24.8	3.30	29.5	4.22	32.7	4.88	33.2	4.90	33.6	4.93	34.5	4.97	35.4	5.03
	21	24.8	3.39	29.5	4.37	32.5	4.99	33.0	5.02	33.4	5.04	34.3	5.10	35.2	5.14
	23	24.8	3.63	29.5	4.69	32.1	5.22	32.5	5.25	32.9	5.27	33.8	5.33	34.7	5.38
	25	24.8	3.88	29.5	5.02	31.6	5.45	32.1	5.47	32.5	5.51	33.4	5.56	34.3	5.62
	27	24.8	4.14	29.5	5.37	31.2	4.80	31.6	5.71	32.0	5.74	32.9	5.80	33.8	5.86
	29	24.8	4.42	29.5	5.74	30.7	5.90	31.1	5.94	31.6	5.97	32.5	6.04	33.4	6.10
	31	24.8	4.72	29.4	6.07	30.2	6.14	30.7	6.18	31.1	6.20	32.0	6.27	32.9	6.34
	33	24.8	5.03	28.9	6.30	29.8	6.36	30.2	6.40	30.7	6.44	31.6	6.51	32.4	6.59
	35	24.8	5.36	28.4	6.53	29.3	6.61	29.8	6.64	30.2	6.68	31.1	6.76	32.0	6.83
	37	24.8	5.70	28.0	6.76	28.9	6.84	29.3	6.88	29.8	6.92	30.6	7.00	31.5	7.08
	39	24.8	6.07	27.5	6.99	28.4	7.07	28.9	7.12	29.3	7.16	30.2	7.24	31.1	7.33
	41	23.4	6.75	27.0	8.22	27.8	8.32	28.3	7.70	28.7	7.74	29.6	7.84	30.5	7.92
	43	22.1	7.04	26.5	8.57	27.3	8.77	27.8	8.19	28.2	8.04	29.0	8.03	29.9	8.12
	44	21.8	7.34	25.6	8.94	26.5	9.25	27.1	8.70	27.6	8.35	28.5	8.24	29.5	8.33
	47	20.6	9.77	24.7	11.90	25.6	9.71	26.2	8.83	26.6	8.88	27.5	8.85	28.5	8.94
	50	18.8	9.60	22.1	11.68	22.9	10.24	23.3	9.56	23.7	9.48	24.6	9.46	25.6	9.35
	52	12.0	5.68	16.2	7.07	20.0	7.96	22.0	8.35	22.1	8.08	22.7	7.97	24.0	8.18
120%	-5	22.9	2.56	27.2	3.32	31.6	3.52	33.8	3.54	35.6	3.56	36.4	3.60	37.2	3.64
	0	22.9	2.57	27.2	3.32	31.6	3.53	33.8	3.55	35.6	3.57	36.4	3.61	37.2	3.64
	4	22.9	2.58	27.2	3.34	31.6	3.54	33.8	3.56	35.6	3.58	36.4	3.62	37.2	3.66
	7	22.9	2.63	27.2	3.40	31.6	3.61	33.8	3.63	35.6	3.65	36.4	3.69	37.2	3.73
	10	22.9	2.74	27.2	3.34	31.6	3.97	33.8	4.30	35.4	4.48	36.3	4.31	37.1	4.14
	12	22.9	2.79	27.2	3.40	31.6	4.05	33.8	4.38	34.9	4.46	35.7	4.29	36.6	4.11
	14	22.9	2.84	27.2	3.47	31.6	4.13	33.8	4.47	34.4	4.43	35.3	4.26	36.2	4.29
	16	22.9	2.90	27.2	3.54	31.6	4.21	33.6	4.50	34.0	4.44	34.8	4.48	35.6	4.52
	18	22.9	2.95	27.2	3.61	31.6	4.36	33.1	4.65	33.5	4.67	34.3	4.71	35.2	4.76
	20	22.9	3.01	27.2	3.76	31.6	4.69	32.7	4.88	33.1	4.90	33.9	4.94	34.7	4.98
	21	22.9	3.04	27.2	3.89	31.6	4.85	32.4	4.99	32.8	5.01	33.7	5.05	34.5	5.11
	23	22.9	3.25	27.2	4.17	31.6	5.19	32.0	5.21	32.4	5.24	33.2	5.29	34.0	5.33
	25	22.9	3.47	27.2	4.46	31.1	5.42	31.5	5.44	31.9	5.47	32.8	5.52	33.6	5.57
	27	22.9	3.70	27.2	4.76	30.7	5.64	31.1	5.68	31.5	5.70	32.3	5.76	33.1	5.81
	29	22.9	3.95	27.2	5.09	30.2	5.87	30.6	5.90	31.0	5.93	31.8	5.99	32.7	6.05
	31	22.9	4.21	27.2	5.43	29.8	6.11	30.2	6.13	30.6	6.17	31.4	6.23	32.2	6.29
	33	22.9	4.48	27.2	5.80	29.3	6.33	29.7	6.37	30.1	6.40	30.9	6.47	31.7	6.53
	35	22.9	4.77	27.2	6.18	28.8	6.56	29.2	6.60	29.7	6.63	30.5	6.70	31.3	6.77
	37	22.9	5.08	27.2	6.58	28.4	6.80	28.8	6.83	29.2	6.87	30.0	6.94	30.8	7.02
	39	22.9	5.40	27.1	6.95	27.9	7.03	28.3	7.07	28.7	7.11	29.6	7.19	30.4	7.26
	41	21.6	6.01	25.8	7.78	27.4	8.27	27.8	7.65	28.3	7.69	29.0	7.78	29.8	7.86
	43	20.4	6.27	24.6	8.11	26.8	8.71	27.2	8.13	27.8	7.99	28.5	7.97	29.3	8.06
	44	20.1	6.54	24.5	8.46	26.1	9.19	26.6	8.64	27.1	8.29	27.9	8.18	28.8	8.26
	47	19.0	8.70	23.7	11.26	25.2	9.65	25.6	8.77	26.1	8.82	27.0	8.78	27.9	8.87
	50	17.4	8.54	21.2	11.06	22.5	10.17	22.9	9.50	23.3	9.42	24.1	9.38	25.1	9.28
	52	11.8	5.64	15.9	7.02	19.6	7.90	21.6	8.30	21.7	8.02	22.2	7.92	23.5	8.13

TC—Total capacity of outdoor unit; PI—Power input of outdoor unit															
Connection ratio	Outdoor air temp. (℃ DB)	Indoor air temp.													
		14.0℃ WB		17.0℃ WB		18.0℃ WB		19.0℃ WB		20.0℃ WB		22.0℃ WB		24.0℃ WB	
		20.0℃ DB		24.0℃ DB		26.0℃ DB		27.0℃ DB		28.0℃ DB		30.0℃ DB		32.0℃ DB	
		TC	PI	TC	PI	TC	PI	TC	PI	TC	PI	TC	PI	TC	PI
		kW	kW	kW	kW	kW	kW	kW	kW	kW	kW	kW	kW	kW	kW
110%	-5	20.9	2.27	25.0	2.92	29.0	3.50	31.0	3.52	33.0	3.54	35.6	3.57	36.3	3.60
	0	20.9	2.27	25.0	2.92	29.0	3.51	31.0	3.53	33.0	3.54	35.6	3.58	36.3	3.61
	4	20.9	2.28	25.0	2.93	29.0	3.52	31.0	3.54	33.0	3.56	35.6	3.59	36.3	3.62
	7	20.9	2.32	25.0	2.99	29.0	3.59	31.0	3.60	33.0	3.62	35.6	3.66	36.3	3.69
	10	20.9	2.48	25.0	3.03	29.0	3.60	31.0	3.89	33.0	4.19	35.5	4.44	36.4	4.29
	12	20.9	2.54	25.0	3.09	29.0	3.67	31.0	3.97	33.0	4.26	35.1	4.42	35.8	4.26
	14	20.9	2.58	25.0	3.14	29.0	3.74	31.0	4.04	33.0	4.34	34.6	4.42	35.4	4.26
	16	20.9	2.62	25.0	3.20	29.0	3.81	31.0	4.11	33.0	4.43	34.2	4.45	34.9	4.49
	18	20.9	2.68	25.0	3.26	29.0	3.89	31.0	4.23	33.0	4.64	33.7	4.68	34.5	4.72
	20	20.9	2.73	25.0	3.33	29.0	4.11	31.0	4.54	32.5	4.87	33.3	4.90	34.0	4.95
	21	20.9	2.75	25.0	3.43	29.0	4.26	31.0	4.71	32.3	4.98	33.0	5.02	33.8	5.06
	23	20.9	2.89	25.0	3.68	29.0	4.57	31.0	5.05	31.8	5.20	32.6	5.26	33.3	5.30
	25	20.9	3.07	25.0	3.93	29.0	4.89	31.0	5.41	31.4	5.43	32.1	5.48	32.9	5.53
	27	20.9	3.28	25.0	4.20	29.0	5.23	30.5	5.64	30.9	5.66	31.7	5.71	32.4	5.76
	29	20.9	3.50	25.0	4.48	29.0	5.59	30.1	5.87	30.5	5.90	31.2	5.95	32.0	6.00
	31	20.9	3.73	25.0	4.78	29.0	5.97	29.6	6.10	30.0	6.12	30.8	6.18	31.5	6.24
	33	20.9	3.97	25.0	5.10	28.8	6.29	29.2	6.33	29.6	6.35	30.3	6.41	31.1	6.47
	35	20.9	4.22	25.0	5.43	28.4	6.52	28.7	6.55	29.1	6.59	29.8	6.65	30.6	6.71
	37	20.9	4.49	25.0	5.78	27.9	6.76	28.3	6.78	28.6	6.82	29.4	6.89	30.1	6.95
	39	20.9	4.77	25.0	6.16	27.4	6.98	27.8	7.02	28.2	7.05	28.9	7.12	29.7	7.19
	41	19.8	5.32	23.7	6.84	27.0	8.21	27.3	7.60	27.7	7.64	28.4	7.71	29.2	7.79
	43	18.7	5.54	22.5	7.14	26.6	8.66	26.8	8.08	27.2	7.93	27.9	7.91	28.7	7.98
	44	18.4	5.78	22.5	7.44	25.7	9.13	26.1	8.59	26.6	8.24	27.3	8.11	28.2	8.19
	47	17.4	7.69	21.7	9.90	24.8	9.58	25.2	8.72	25.6	8.76	26.4	8.71	27.2	8.79
	50	15.9	7.55	19.5	9.72	22.2	10.10	22.5	9.44	22.8	9.36	23.5	9.31	24.5	9.20
	52	11.6	5.60	15.6	6.98	19.3	7.85	21.2	8.24	21.3	7.97	21.8	7.86	23.1	8.07
100%	-5	19.0	1.98	22.7	2.54	26.4	3.16	28.0	3.50	30.0	3.51	33.7	3.54	35.6	3.58
	0	19.0	1.99	22.7	2.54	26.4	3.17	28.0	3.50	30.0	3.52	33.7	3.55	35.6	3.58
	4	19.0	1.99	22.7	2.55	26.4	3.18	28.0	3.52	30.0	3.53	33.7	3.56	35.6	3.60
	7	19.0	2.03	22.7	2.60	26.4	3.24	28.0	3.58	30.0	3.60	33.7	3.63	35.6	3.66
	10	19.0	2.25	22.7	2.73	26.4	3.23	28.0	3.48	30.0	3.76	33.7	4.26	35.6	4.43
	12	19.0	2.28	22.7	2.76	26.4	3.27	28.0	3.53	30.0	3.84	33.7	4.33	35.1	4.39
	14	19.0	2.32	22.7	2.81	26.4	3.33	28.0	3.60	30.0	3.91	33.7	4.41	34.7	4.36
	16	19.0	2.37	22.7	2.88	26.4	3.40	28.0	3.68	30.0	3.99	33.6	4.51	34.2	4.45
	18	19.0	2.42	22.7	2.94	26.4	3.47	28.0	3.75	30.0	4.07	33.1	4.59	33.8	4.66
	20	19.0	2.46	22.7	2.99	26.4	3.58	28.0	3.94	30.0	4.33	32.6	4.84	33.3	4.91
	21	19.0	2.48	22.7	3.02	26.4	3.70	28.0	4.08	30.0	4.48	32.4	5.00	33.1	5.05
	23	19.0	2.55	22.7	3.22	26.4	3.98	28.0	4.39	30.0	4.82	32.0	5.29	32.6	5.34
	25	19.0	2.71	22.7	3.43	26.4	4.24	28.0	4.67	30.0	5.15	31.5	5.48	32.2	5.53
	27	19.0	2.89	22.7	3.66	26.4	4.55	28.0	5.01	30.0	5.53	31.0	5.68	31.7	5.73
	29	19.0	3.07	22.7	3.91	26.4	4.86	28.0	5.36	29.9	5.85	30.6	5.95	31.3	6.00
	31	19.0	3.26	22.7	4.17	26.4	5.18	28.0	5.77	29.5	6.09	29.9	6.19	30.8	6.25
	33	19.0	3.47	22.7	4.44	26.4	5.53	28.0	6.11	29.0	6.31	29.7	6.37	30.4	6.43
	35	19.0	3.69	22.7	4.73	26.4	5.89	28.0	6.51	28.5	6.54	29.2	6.60	29.9	6.66
	37	19.0	3.93	22.7	5.03	26.4	6.27	27.7	6.74	28.1	6.78	28.8	6.83	29.5	6.89
	39	19.0	4.19	22.7	5.36	26.4	6.68	27.3	6.97	27.5	7.00	28.4	7.05	28.8	7.11
	41	18.0	4.65	21.5	5.95	25.1	7.42	26.8	7.55	27.1	7.59	27.8	7.66	28.5	7.73
	43	17.0	4.85	20.4	6.21	24.5	7.82	26.3	8.03	26.7	7.88	27.2	7.85	28.2	7.92
	44	16.7	5.06	20.4	6.47	23.9	8.25	25.7	8.53	26.0	8.18	26.7	8.05	27.5	8.13
	47	15.8	6.73	19.7	8.61	23.1	8.66	24.8	8.66	25.1	8.70	25.8	8.65	26.6	8.73
	50	14.5	6.61	17.7	8.46	20.6	9.13	22.1	9.37	22.4	9.29	23.1	9.24	23.9	9.13
	52	11.4	5.10	15.3	6.35	18.9	7.15	20.8	7.50	20.9	7.26	21.4	7.16	22.7	7.35

GMV X DC Inverter VRF Units

TC—Total capacity of outdoor unit; PI—Power input of outdoor unit															
Connection ratio	Outdoor air temp. (℃ DB)	Indoor air temp.													
		14.0℃ WB		17.0℃ WB		18.0℃ WB		19.0℃ WB		20.0℃ WB		22.0℃ WB		24.0℃ WB	
		20.0℃ DB		24.0℃ DB		26.0℃ DB		27.0℃ DB		28.0℃ DB		30.0℃ DB		32.0℃ DB	
		TC	PI	TC	PI	TC	PI	TC	PI	TC	PI	TC	PI	TC	PI
		kW	kW	kW	kW	kW	kW	kW	kW	kW	kW	kW	kW	kW	kW
90%	-5	17.1	1.73	20.4	2.19	23.7	2.70	25.4	2.99	27.0	3.28	30.3	3.51	33.6	3.55
	0	17.1	1.73	20.4	2.19	23.7	2.71	25.4	2.99	27.0	3.29	30.3	3.52	33.6	3.55
	4	17.1	1.74	20.4	2.20	23.7	2.72	25.4	3.00	27.0	3.30	30.3	3.53	33.6	3.57
	7	17.1	1.77	20.4	2.24	23.7	2.77	25.4	3.06	27.0	3.36	30.3	3.60	33.6	3.63
	10	17.1	1.96	20.4	2.35	23.7	2.76	25.4	3.11	27.0	3.31	30.4	3.79	33.6	4.29
	12	17.1	1.99	20.4	2.38	23.7	2.79	25.4	3.15	27.0	3.37	30.4	3.85	33.6	4.35
	14	17.1	2.02	20.4	2.43	23.7	2.84	25.4	3.19	27.0	3.43	30.4	3.92	33.6	4.42
	16	17.1	2.07	20.4	2.48	23.7	2.90	25.4	3.27	27.0	3.51	30.4	4.01	33.5	4.50
	18	17.1	2.11	20.4	2.54	23.7	2.96	25.4	3.33	27.0	3.57	30.4	4.10	33.2	4.67
	20	17.1	2.14	20.4	2.57	23.7	3.06	25.4	3.40	27.0	3.72	30.4	4.41	32.6	4.86
	21	17.1	2.17	20.4	2.60	23.7	3.16	25.4	3.51	27.0	3.85	30.4	4.56	32.4	4.97
	23	17.1	2.22	20.4	2.78	23.7	3.40	25.4	3.77	27.0	4.12	30.4	4.89	31.9	5.23
	25	17.1	2.36	20.4	2.96	23.7	3.62	25.4	4.03	27.0	4.41	30.4	5.23	31.5	5.44
	27	17.1	2.52	20.4	3.16	23.7	3.88	25.4	4.30	27.0	4.72	30.4	5.59	31.0	5.68
	29	17.1	2.67	20.4	3.37	23.7	4.15	25.4	4.59	27.0	5.04	30.0	5.86	30.6	5.91
	31	17.1	2.84	20.4	3.59	23.7	4.43	25.4	4.90	27.0	5.37	29.5	6.07	30.1	6.15
	33	17.1	3.03	20.4	3.83	23.7	4.72	25.4	5.21	27.0	5.72	29.1	6.31	29.7	6.37
	35	17.1	3.22	20.4	4.08	23.7	5.03	25.4	5.56	27.0	6.12	28.6	6.54	29.2	6.60
	37	17.1	3.43	20.4	4.34	23.7	5.36	24.9	5.76	27.0	6.54	28.1	6.78	28.8	6.76
	39	17.1	3.65	20.4	4.62	23.7	5.71	24.6	5.95	27.0	6.94	27.7	7.03	28.3	7.01
	41	16.2	4.06	19.4	5.14	22.6	6.34	24.1	6.45	25.7	7.09	27.2	7.59	27.8	7.66
	43	15.3	4.23	18.4	5.35	22.0	6.69	23.7	6.85	25.2	7.36	26.8	7.78	27.4	7.87
	44	15.1	4.41	18.4	5.58	21.5	7.04	23.1	7.28	24.7	7.64	26.2	7.98	26.9	8.06
	47	14.2	5.87	17.7	7.43	20.8	7.40	22.3	7.39	23.8	8.13	25.3	8.57	26.0	8.65
	50	13.0	5.76	15.9	7.30	18.5	7.80	19.9	8.01	21.2	8.68	22.6	9.16	23.4	9.05
	52	10.2	4.76	13.8	5.92	17.0	6.66	18.8	7.00	18.9	6.77	19.5	6.67	20.4	6.85
80%	-5	15.2	1.49	18.1	1.84	21.1	2.29	22.6	2.52	24.0	2.75	27.0	3.27	29.9	3.50
	0	15.2	1.50	18.1	1.85	21.1	2.29	22.6	2.53	24.0	2.76	27.0	3.28	29.9	3.51
	4	15.2	1.50	18.1	1.85	21.1	2.30	22.6	2.53	24.0	2.77	27.0	3.29	29.9	3.52
	7	15.2	1.53	18.1	1.89	21.1	2.35	22.6	2.58	24.0	2.82	27.0	3.35	29.9	3.59
	10	15.2	1.78	18.1	2.13	21.1	2.51	22.6	2.70	24.0	2.89	27.0	3.31	29.9	3.84
	12	15.2	1.81	18.1	2.17	21.1	2.55	22.6	2.75	24.0	2.95	27.0	3.36	29.9	3.81
	14	15.2	1.84	18.1	2.21	21.1	2.60	22.6	2.80	24.0	3.00	27.0	3.42	29.9	3.89
	16	15.2	1.87	18.1	2.25	21.1	2.65	22.6	2.85	24.0	3.05	27.0	3.50	29.9	4.04
	18	15.2	1.90	18.1	2.29	21.1	2.71	22.6	2.91	24.0	3.11	27.0	3.58	29.9	4.32
	20	15.2	1.94	18.1	2.33	21.1	2.75	22.6	2.97	24.0	3.18	27.0	3.71	29.9	4.47
	21	15.2	1.96	18.1	2.35	21.1	2.78	22.6	3.00	24.0	3.25	27.0	3.84	29.9	4.79
	23	15.2	1.99	18.1	2.40	21.1	2.91	22.6	3.19	24.0	3.48	27.0	4.11	29.9	5.12
	25	15.2	2.05	18.1	2.55	21.1	3.11	22.6	3.41	24.0	3.71	27.0	4.40	29.9	5.47
	27	15.2	2.18	18.1	2.72	21.1	3.32	22.6	3.64	24.0	3.98	27.0	4.69	29.9	5.66
	29	15.2	2.33	18.1	2.90	21.1	3.54	22.6	3.88	23.9	4.24	27.0	5.01	29.9	5.86
	31	15.2	2.47	18.1	3.08	21.1	3.76	22.6	4.13	23.9	4.52	27.0	5.35	29.4	6.08
	33	15.2	2.62	18.1	3.43	21.1	4.01	22.6	4.40	23.9	4.82	27.0	5.71	29.0	6.30
	35	15.2	2.78	18.1	3.43	21.1	4.26	22.6	4.69	23.9	5.13	27.0	6.09	28.5	6.52
	37	15.2	2.95	18.1	3.69	21.1	4.54	22.2	5.00	23.9	5.46	27.0	6.49	28.1	6.77
	39	15.2	3.12	18.1	3.92	21.1	4.83	21.9	5.32	23.9	5.82	27.0	6.91	27.6	7.02
	41	14.4	3.50	17.2	4.32	20.1	5.37	21.4	5.44	22.8	5.95	25.7	7.06	27.2	7.57
	43	13.6	3.65	16.7	4.51	19.5	5.66	21.0	5.79	22.3	6.18	25.2	7.24	26.7	7.76
	44	13.4	3.81	16.3	4.70	19.1	5.97	20.5	6.15	21.8	6.41	24.7	7.43	26.2	7.96
	47	12.6	5.07	15.8	6.25	18.5	6.27	19.8	6.24	21.1	6.82	23.9	7.98	25.4	8.55
	50	11.6	4.98	14.1	6.14	16.5	6.61	17.7	6.76	18.8	7.28	21.3	8.53	22.8	8.94
	52	9.1	4.01	12.2	5.00	15.1	5.62	16.7	5.90	16.8	5.71	17.2	5.63	18.1	5.78

TC—Total capacity of outdoor unit; PI—Power input of outdoor unit															
Connection ratio	Outdoor air temp. (℃ DB)	Indoor air temp.													
		14.0℃ WB		17.0℃ WB		18.0℃ WB		19.0℃ WB		20.0℃ WB		22.0℃ WB		24.0℃ WB	
		20.0℃ DB		24.0℃ DB		26.0℃ DB		27.0℃ DB		28.0℃ DB		30.0℃ DB		32.0℃ DB	
		TC	PI	TC	PI	TC	PI	TC	PI	TC	PI	TC	PI	TC	PI
		kW	kW	kW	kW	kW	kW	kW	kW	kW	kW	kW	kW	kW	kW
70%	-5	13.3	1.27	15.9	1.57	18.5	1.91	19.7	2.09	21.0	2.28	23.6	2.69	26.2	3.12
	0	13.3	1.27	15.9	1.58	18.5	1.91	19.7	2.10	21.0	2.28	23.6	2.69	26.2	3.13
	4	13.3	1.28	15.9	1.58	18.5	1.92	19.7	2.10	21.0	2.29	23.6	2.70	26.2	3.14
	7	13.3	1.30	15.9	1.61	18.5	1.95	19.7	2.14	21.0	2.34	23.6	2.75	26.2	3.20
	10	13.3	1.57	15.9	1.86	18.5	2.17	19.7	2.33	21.0	2.50	23.6	2.84	26.2	3.19
	12	13.3	1.59	15.9	1.89	18.5	2.21	19.7	2.38	21.0	2.54	23.6	2.90	26.2	3.26
	14	13.3	1.61	15.9	1.92	18.5	2.25	19.7	2.41	21.0	2.59	23.6	2.95	26.2	3.32
	16	13.3	1.64	15.9	1.96	18.5	2.29	19.7	2.47	21.0	2.64	23.6	3.00	26.2	3.38
	18	13.3	1.67	15.9	1.99	18.5	2.33	19.7	2.51	21.0	2.68	23.6	3.06	26.2	3.45
	20	13.3	1.69	15.9	2.03	18.5	2.38	19.7	2.55	21.0	2.74	23.6	3.12	26.2	3.54
	21	13.3	1.71	15.9	2.04	18.5	2.40	19.7	2.58	21.0	2.76	23.6	3.16	26.2	3.67
	23	13.3	1.74	15.9	2.08	18.5	2.45	19.7	2.67	21.0	2.90	23.6	3.40	26.2	3.93
	25	13.3	1.77	15.9	2.17	18.5	2.61	19.7	2.85	21.0	3.10	23.6	3.63	26.2	4.20
	27	13.3	1.88	15.9	2.31	18.5	2.78	19.7	3.04	21.0	3.31	23.6	3.88	26.2	4.49
	29	13.3	1.99	15.9	2.45	18.5	2.96	19.7	3.24	21.0	3.52	23.6	4.13	26.2	4.80
	31	13.3	2.11	15.9	2.60	18.5	3.15	19.7	3.44	21.0	3.75	23.6	4.40	26.2	5.12
	33	13.3	2.24	15.9	2.76	18.5	3.35	19.7	3.66	21.0	3.99	23.6	4.69	26.2	5.46
	35	13.3	2.37	15.9	2.93	18.5	3.55	19.7	3.90	21.0	4.25	23.6	5.00	26.2	5.82
	37	13.3	2.50	15.9	3.11	18.5	3.78	19.4	4.14	21.0	4.52	23.6	5.33	26.2	6.19
	39	13.3	2.65	15.9	3.29	18.5	4.01	19.1	4.40	21.0	4.80	23.6	5.66	26.2	6.60
	41	12.6	2.98	15.1	3.69	17.5	4.48	18.8	4.52	20.0	4.93	22.5	5.80	25.0	6.75
	43	11.9	3.11	14.6	3.85	16.9	4.72	18.4	4.80	19.0	5.11	22.1	5.95	24.3	6.92
	44	11.7	3.25	14.3	4.01	16.7	4.97	18.0	5.10	19.2	5.31	21.6	6.10	24.1	7.10
	47	11.1	4.32	13.8	5.34	16.2	5.22	17.3	5.18	18.5	5.65	20.9	6.55	23.3	7.62
	50	10.1	4.24	12.4	5.25	14.4	5.51	15.5	5.61	16.5	6.03	18.6	7.00	20.9	7.97
	52	8.0	3.33	10.7	4.15	13.3	4.62	14.6	4.90	14.7	4.74	15.0	4.67	15.9	4.80
60%	-5	11.4	1.07	13.6	1.31	15.8	1.56	16.9	1.71	18.0	1.85	20.2	2.16	22.5	2.50
	0	11.4	1.07	13.6	1.31	15.8	1.57	16.9	1.71	18.0	1.86	20.2	2.17	22.5	2.50
	4	11.4	1.08	13.6	1.31	15.8	1.57	16.9	1.72	18.0	1.86	20.2	2.17	22.5	2.51
	7	11.4	1.10	13.6	1.34	15.8	1.60	16.9	1.75	18.0	1.90	20.2	2.21	22.5	2.56
	10	11.4	1.36	13.6	1.60	15.8	1.85	16.9	1.98	18.0	2.11	20.2	2.40	22.5	2.68
	12	11.4	1.39	13.6	1.62	15.8	1.89	16.9	2.02	18.0	2.15	20.2	2.44	22.5	2.73
	14	11.4	1.40	13.6	1.65	15.8	1.91	16.9	2.05	18.0	2.19	20.2	2.48	22.5	2.78
	16	11.4	1.42	13.6	1.68	15.8	1.95	16.9	2.09	18.0	2.23	20.2	2.53	22.5	2.83
	18	11.4	1.45	13.6	1.70	15.8	1.98	16.9	2.12	18.0	2.27	20.2	2.57	22.5	2.89
	20	11.4	1.47	13.6	1.74	15.8	2.02	16.9	2.17	18.0	2.32	20.2	2.62	22.5	2.95
	21	11.4	1.48	13.6	1.75	15.8	2.04	16.9	2.18	18.0	2.33	20.2	2.65	22.5	2.97
	23	11.4	1.50	13.6	1.78	15.8	2.07	16.9	2.23	18.0	2.38	20.2	2.75	22.5	3.17
	25	11.4	1.53	13.6	1.82	15.8	2.15	16.9	2.33	18.0	2.53	20.2	2.94	22.5	3.38
	27	11.4	1.59	13.6	1.92	15.8	2.29	16.9	2.49	18.0	2.69	20.2	3.13	22.5	3.61
	29	11.4	1.68	13.6	2.04	15.8	2.44	16.9	2.65	18.0	2.87	20.2	3.34	22.5	3.85
	31	11.4	1.78	13.6	2.17	15.8	2.59	16.9	2.82	18.0	3.05	20.2	3.55	22.5	4.10
	33	11.4	1.88	13.6	2.29	15.8	2.75	16.9	2.99	18.0	3.25	20.2	3.78	22.5	4.37
	35	11.4	1.99	13.6	2.43	15.8	2.91	16.9	3.18	18.0	3.45	20.2	4.03	22.5	4.65
	37	11.4	2.11	13.6	2.57	15.8	3.09	16.6	3.37	18.0	3.66	20.2	4.28	22.5	4.95
	39	11.4	2.22	13.6	2.72	15.8	3.27	16.4	3.57	18.0	3.89	20.2	4.54	22.5	5.26
	41	10.8	2.51	12.9	3.06	15.0	3.67	16.1	3.68	17.1	4.00	19.3	4.67	21.4	5.39
	43	10.2	2.62	12.3	3.19	14.6	3.87	15.8	3.91	16.6	4.15	19.0	4.79	20.9	5.53
	44	10.0	2.73	12.2	3.33	14.3	4.08	15.4	4.16	16.4	4.31	18.5	4.91	20.7	5.67
	47	9.5	3.63	11.8	4.43	13.9	4.28	14.9	4.22	15.8	4.59	17.9	5.28	20.0	6.09
	50	8.7	3.56	10.6	4.35	12.4	4.51	13.2	4.57	14.1	4.90	16.0	5.64	18.0	6.37
	52	6.8	2.72	9.2	3.38	11.4	3.80	12.5	3.99	12.6	3.86	12.9	3.81	13.6	3.91

GMV X DC Inverter VRF Units

TC—Total capacity of outdoor unit; PI—Power input of outdoor unit															
Connection ratio	Outdoor air temp. (℃ DB)	Indoor air temp.													
		14.0℃ WB		17.0℃ WB		18.0℃ WB		19.0℃ WB		20.0℃ WB		22.0℃ WB		24.0℃ WB	
		20.0℃ DB		24.0℃ DB		26.0℃ DB		27.0℃ DB		28.0℃ DB		30.0℃ DB		32.0℃ DB	
		TC	PI	TC	PI	TC	PI	TC	PI	TC	PI	TC	PI	TC	PI
		kW	kW	kW	kW	kW	kW	kW	kW	kW	kW	kW	kW	kW	kW
50%	-5	9.5	0.89	11.3	1.06	13.2	1.25	14.1	1.36	15.0	1.47	16.9	1.70	18.7	1.94
	0	9.5	0.89	11.3	1.06	13.2	1.26	14.1	1.36	15.0	1.47	16.9	1.70	18.7	1.94
	4	9.5	0.89	11.3	1.07	13.2	1.26	14.1	1.36	15.0	1.47	16.9	1.71	18.7	1.95
	7	9.5	0.91	11.3	1.09	13.2	1.28	14.1	1.39	15.0	1.50	16.9	1.74	18.7	1.99
	10	9.5	1.18	11.3	1.36	13.2	1.55	14.1	1.66	15.0	1.75	16.9	1.97	18.7	2.20
	12	9.5	1.18	11.3	1.38	13.2	1.58	14.1	1.68	15.0	1.79	16.9	2.01	18.7	2.24
	14	9.5	1.20	11.3	1.40	13.2	1.60	14.1	1.71	15.0	1.82	16.9	2.04	18.7	2.28
	16	9.5	1.22	11.3	1.41	13.2	1.62	14.1	1.74	15.0	1.84	16.9	2.08	18.7	2.32
	18	9.5	1.24	11.3	1.44	13.2	1.65	14.1	1.76	15.0	1.88	16.9	2.11	18.7	2.36
	20	9.5	1.25	11.3	1.46	13.2	1.68	14.1	1.80	15.0	1.91	16.9	2.16	18.7	2.40
	21	9.5	1.26	11.3	1.47	13.2	1.69	14.1	1.81	15.0	1.93	16.9	2.18	18.7	2.43
	23	9.5	1.28	11.3	1.49	13.2	1.72	14.1	1.84	15.0	1.97	16.9	2.21	18.7	2.48
	25	9.5	1.30	11.3	1.52	13.2	1.75	14.1	1.88	15.0	2.03	16.9	2.33	18.7	2.65
	27	9.5	1.32	11.3	1.58	13.2	1.85	14.1	2.00	15.0	2.15	16.9	2.47	18.7	2.83
	29	9.5	1.40	11.3	1.67	13.2	1.97	14.1	2.12	15.0	2.29	16.9	2.63	18.7	3.01
	31	9.5	1.47	11.3	1.76	13.2	2.10	14.1	2.25	15.0	2.43	16.9	2.80	18.7	3.20
	33	9.5	1.56	11.3	1.87	13.2	2.21	14.1	2.39	15.0	2.58	16.9	2.97	18.7	3.40
	35	9.5	1.65	11.3	1.97	13.2	2.33	14.1	2.53	15.0	2.73	16.9	3.16	18.7	3.61
	37	9.5	1.74	11.3	2.09	13.2	2.47	13.8	2.68	15.0	2.90	16.9	3.35	18.7	3.84
	39	9.5	1.83	11.3	2.20	13.2	2.61	13.7	2.83	15.0	3.07	16.9	3.55	18.7	4.08
	41	9.0	2.08	10.8	2.49	12.5	2.94	13.4	2.93	14.2	3.17	16.1	3.66	17.8	4.19
	43	8.5	2.17	10.2	2.61	12.2	3.10	13.1	3.14	14.0	3.29	15.6	3.76	17.4	4.30
	44	8.4	2.26	10.2	2.70	11.9	3.27	12.8	3.31	13.7	3.41	15.4	3.85	17.2	4.41
	47	7.9	3.01	9.9	3.60	11.5	3.43	12.4	3.36	13.2	3.63	14.9	4.14	16.7	4.74
	50	7.2	2.95	8.8	3.53	10.3	3.62	11.0	3.64	11.7	3.87	13.3	4.42	15.0	4.95
	52	5.7	2.16	7.7	2.69	9.5	3.03	10.4	3.18	10.5	3.07	10.7	3.03	11.3	3.11

GMV-335WM/B-X(P)

TC—Total capacity of outdoor unit; PI—Power input of outdoor unit															
Connection ratio	Outdoor air temp. (℃ DB)	Indoor air temp.													
		14.0℃ WB		17.0℃ WB		18.0℃ WB		19.0℃ WB		20.0℃ WB		22.0℃ WB		24.0℃ WB	
		20.0℃ DB		24.0℃ DB		26.0℃ DB		27.0℃ DB		28.0℃ DB		30.0℃ DB		32.0℃ DB	
		TC	PI	TC	PI	TC	PI	TC	PI	TC	PI	TC	PI	TC	PI
		kW	kW	kW	kW	kW	kW	kW	kW	kW	kW	kW	kW	kW	kW
135%	-5	29.6	3.58	35.3	4.36	41.0	4.41	42.5	4.43	43.3	4.46	44.4	4.51	45.5	4.56
	0	29.6	3.58	35.3	4.36	41.0	4.42	42.5	4.44	43.3	4.46	44.4	4.52	45.5	4.56
	4	29.6	3.60	35.3	4.38	41.0	4.43	42.5	4.46	43.3	4.48	44.4	4.53	45.5	4.58
	7	29.6	3.66	35.3	4.46	41.0	4.52	42.5	4.54	43.3	4.56	44.4	4.62	45.5	4.67
	10	29.6	3.73	35.3	4.56	41.0	5.42	42.5	5.54	43.0	5.43	44.1	5.20	45.2	4.96
	12	29.6	3.79	35.3	4.64	41.0	5.53	41.9	5.51	42.5	5.40	43.5	5.16	44.6	5.08
	14	29.6	3.87	35.3	4.73	40.8	5.59	41.4	5.48	41.9	5.36	43.0	5.32	44.1	5.38
	16	29.6	3.94	35.3	4.83	40.4	5.57	40.8	5.53	41.3	5.55	42.4	5.60	43.5	5.66
	18	29.6	4.01	35.3	4.93	39.8	5.78	40.2	5.81	40.8	5.84	41.9	5.90	43.0	5.95
	20	29.6	4.10	35.3	5.24	39.2	6.06	39.8	6.09	40.2	6.13	41.3	6.18	42.4	6.25
	21	29.6	4.21	35.3	5.43	38.9	6.20	39.5	6.24	40.0	6.27	41.1	6.33	42.2	6.39
	23	29.6	4.51	35.3	5.82	38.4	6.49	38.9	6.52	39.4	6.55	40.5	6.62	41.6	6.68
	25	29.6	4.82	35.3	6.24	37.8	6.77	38.4	6.80	38.9	6.85	40.0	6.91	41.1	6.98
	27	29.6	5.15	35.3	6.67	37.3	5.96	37.8	7.10	38.3	7.13	39.4	7.21	40.5	7.28
	29	29.6	5.50	35.3	7.13	36.7	7.34	37.2	7.38	37.8	7.42	38.9	7.50	40.0	7.58
	31	29.6	5.87	35.2	7.54	36.1	7.63	36.7	7.68	37.2	7.71	38.3	7.80	39.4	7.88
	33	29.6	6.25	34.6	7.83	35.7	7.90	36.1	7.96	36.7	8.00	37.8	8.09	38.8	8.19
	35	29.6	6.66	34.0	8.11	35.1	8.21	35.7	8.25	36.1	8.30	37.2	8.40	38.3	8.48
	37	29.6	7.09	33.5	8.41	34.6	8.50	35.1	8.55	35.7	8.60	36.6	8.70	37.7	8.80
	39	29.6	7.54	32.9	8.69	34.0	8.79	34.6	8.84	35.1	8.90	36.1	8.99	37.2	9.10
	41	28.0	8.39	32.3	10.22	33.3	10.34	33.9	9.57	34.4	9.62	35.4	9.74	36.5	9.84
	43	26.5	8.75	31.7	10.65	32.7	10.90	33.2	10.18	33.7	9.99	34.8	9.98	35.8	10.09
	44	26.1	9.13	30.6	11.11	31.7	11.49	32.5	10.81	33.0	10.37	34.1	10.24	35.2	10.35
	47	24.6	12.14	29.6	14.79	30.7	12.07	31.3	10.98	31.8	11.04	32.9	11.00	34.1	11.11
	50	22.5	11.92	26.5	14.52	27.4	12.73	27.9	11.89	28.4	11.78	29.4	11.75	30.6	11.62
	52	14.4	7.06	19.4	8.79	23.9	9.89	26.4	10.38	26.5	10.04	27.1	9.90	28.7	10.17
120%	-5	27.3	3.19	32.5	4.12	37.8	4.38	40.5	4.40	42.6	4.43	43.6	4.47	44.5	4.52
	0	27.3	3.19	32.5	4.13	37.8	4.39	40.5	4.41	42.6	4.43	43.6	4.48	44.5	4.53
	4	27.3	3.20	32.5	4.14	37.8	4.40	40.5	4.43	42.6	4.45	43.6	4.50	44.5	4.55
	7	27.3	3.26	32.5	4.22	37.8	4.49	40.5	4.51	42.6	4.53	43.6	4.58	44.5	4.63
	10	27.3	3.40	32.5	4.15	37.8	4.94	40.5	5.34	42.4	5.57	43.4	5.35	44.3	5.15
	12	27.3	3.47	32.5	4.23	37.8	5.04	40.5	5.44	41.8	5.54	42.8	5.33	43.7	5.11
	14	27.3	3.53	32.5	4.32	37.8	5.14	40.5	5.55	41.2	5.51	42.3	5.30	43.3	5.33
	16	27.3	3.60	32.5	4.40	37.8	5.23	40.2	5.59	40.7	5.52	41.7	5.57	42.6	5.62
	18	27.3	3.66	32.5	4.49	37.8	5.42	39.6	5.78	40.1	5.80	41.1	5.85	42.2	5.91
	20	27.3	3.74	32.5	4.67	37.8	5.82	39.2	6.06	39.6	6.08	40.6	6.14	41.6	6.19
	21	27.3	3.77	32.5	4.83	37.8	6.03	38.8	6.20	39.3	6.23	40.4	6.28	41.3	6.35
	23	27.3	4.03	32.5	5.18	37.8	6.45	38.3	6.48	38.8	6.51	39.8	6.57	40.7	6.63
	25	27.3	4.31	32.5	5.54	37.2	6.74	37.7	6.76	38.2	6.79	39.3	6.86	40.2	6.92
	27	27.3	4.60	32.5	5.92	36.7	7.01	37.2	7.05	37.7	7.09	38.7	7.15	39.6	7.22
	29	27.3	4.91	32.5	6.32	36.1	7.29	36.6	7.34	37.1	7.37	38.1	7.45	39.2	7.51
	31	27.3	5.23	32.5	6.75	35.7	7.59	36.1	7.62	36.6	7.66	37.6	7.74	38.6	7.82
	33	27.3	5.57	32.5	7.21	35.1	7.87	35.5	7.92	36.0	7.95	37.0	8.04	38.0	8.11
	35	27.3	5.93	32.5	7.68	34.5	8.16	34.9	8.20	35.5	8.24	36.5	8.33	37.5	8.42
	37	27.3	6.31	32.5	8.18	34.0	8.45	34.5	8.49	34.9	8.54	35.9	8.62	36.9	8.72
	39	27.3	6.72	32.4	8.64	33.4	8.73	33.9	8.79	34.3	8.83	35.4	8.93	36.4	9.02
	41	25.8	7.47	30.9	9.67	32.7	10.28	33.2	9.51	33.8	9.56	34.8	9.66	35.7	9.76
	43	24.4	7.79	29.5	10.08	32.1	10.83	32.6	10.10	33.3	9.93	34.1	9.91	35.0	10.02
	44	24.1	8.13	29.3	10.52	31.2	11.42	31.8	10.74	32.4	10.30	33.4	10.16	34.5	10.27
	47	22.7	10.81	28.3	13.99	30.1	11.99	30.7	10.90	31.3	10.96	32.3	10.91	33.3	11.03
	50	20.8	10.62	25.4	13.74	26.9	12.64	27.4	11.81	27.9	11.70	28.8	11.66	30.0	11.53
	52	14.1	7.01	19.0	8.73	23.5	9.82	25.8	10.31	26.0	9.97	26.6	9.84	28.1	10.10

GMV X DC Inverter VRF Units

TC—Total capacity of outdoor unit; PI—Power input of outdoor unit															
Connection ratio	Outdoor air temp. (℃ DB)	Indoor air temp.													
		14.0℃ WB		17.0℃ WB		18.0℃ WB		19.0℃ WB		20.0℃ WB		22.0℃ WB		24.0℃ WB	
		20.0℃ DB		24.0℃ DB		26.0℃ DB		27.0℃ DB		28.0℃ DB		30.0℃ DB		32.0℃ DB	
		TC	PI	TC	PI	TC	PI	TC	PI	TC	PI	TC	PI	TC	PI
		kW	kW	kW	kW	kW	kW	kW	kW	kW	kW	kW	kW	kW	kW
110%	-5	25.1	2.82	29.9	3.62	34.7	4.35	37.1	4.37	39.5	4.40	42.6	4.44	43.5	4.48
	0	25.1	2.82	29.9	3.63	34.7	4.36	37.1	4.38	39.5	4.41	42.6	4.45	43.5	4.49
	4	25.1	2.83	29.9	3.64	34.7	4.37	37.1	4.40	39.5	4.42	42.6	4.46	43.5	4.50
	7	25.1	2.88	29.9	3.71	34.7	4.46	37.1	4.48	39.5	4.50	42.6	4.55	43.5	4.59
	10	25.1	3.09	29.9	3.76	34.7	4.47	37.1	4.83	39.5	5.20	42.5	5.52	43.5	5.33
	12	25.1	3.15	29.9	3.84	34.7	4.56	37.1	4.93	39.5	5.30	42.0	5.50	42.9	5.30
	14	25.1	3.21	29.9	3.90	34.7	4.64	37.1	5.02	39.5	5.40	41.4	5.50	42.4	5.29
	16	25.1	3.26	29.9	3.98	34.7	4.73	37.1	5.11	39.5	5.51	41.0	5.53	41.8	5.58
	18	25.1	3.33	29.9	4.06	34.7	4.83	37.1	5.26	39.5	5.77	40.4	5.81	41.3	5.87
	20	25.1	3.39	29.9	4.14	34.7	5.11	37.1	5.65	38.9	6.05	39.9	6.09	40.7	6.15
	21	25.1	3.42	29.9	4.26	34.7	5.30	37.1	5.85	38.7	6.19	39.5	6.24	40.5	6.29
	23	25.1	3.59	29.9	4.57	34.7	5.68	37.1	6.28	38.1	6.47	39.0	6.53	39.9	6.59
	25	25.1	3.82	29.9	4.88	34.7	6.07	37.1	6.73	37.6	6.75	38.4	6.81	39.4	6.87
	27	25.1	4.08	29.9	5.22	34.7	6.50	36.5	7.01	37.0	7.03	38.0	7.10	38.8	7.16
	29	25.1	4.35	29.9	5.57	34.7	6.95	36.0	7.29	36.5	7.33	37.3	7.39	38.3	7.46
	31	25.1	4.63	29.9	5.94	34.7	7.41	35.4	7.58	35.9	7.61	36.9	7.68	37.7	7.75
	33	25.1	4.93	29.9	6.33	34.5	7.82	34.9	7.86	35.4	7.89	36.3	7.97	37.2	8.05
	35	25.1	5.24	29.9	6.75	34.0	8.10	34.3	8.14	34.8	8.19	35.7	8.26	36.6	8.34
	37	25.1	5.58	29.9	7.19	33.4	8.40	33.9	8.43	34.2	8.47	35.2	8.56	36.0	8.64
	39	25.1	5.93	29.9	7.65	32.8	8.68	33.3	8.72	33.7	8.77	34.6	8.85	35.5	8.94
	41	23.7	6.61	28.4	8.50	32.3	10.21	32.6	9.45	33.1	9.50	33.9	9.59	34.9	9.68
	43	22.4	6.89	27.0	8.87	31.8	10.76	32.0	10.04	32.5	9.86	33.3	9.83	34.3	9.92
	44	22.1	7.18	26.9	9.25	30.7	11.34	31.2	10.67	31.8	10.24	32.7	10.08	33.7	10.18
	47	20.8	9.56	26.0	12.30	29.7	11.91	30.1	10.83	30.6	10.89	31.6	10.83	32.6	10.93
	50	19.0	9.39	23.3	12.08	26.5	12.56	26.9	11.73	27.3	11.63	28.2	11.57	29.3	11.43
	52	13.9	6.96	18.6	8.67	23.1	9.76	25.4	10.24	25.5	9.91	26.1	9.77	27.6	10.03
100%	-5	22.8	2.46	27.1	3.15	31.6	3.93	33.5	4.34	35.9	4.37	40.4	4.41	42.6	4.44
	0	22.8	2.47	27.1	3.16	31.6	3.94	33.5	4.35	35.9	4.37	40.4	4.41	42.6	4.45
	4	22.8	2.48	27.1	3.17	31.6	3.95	33.5	4.37	35.9	4.39	40.4	4.43	42.6	4.47
	7	22.8	2.52	27.1	3.23	31.6	4.03	33.5	4.45	35.9	4.47	40.4	4.51	42.6	4.55
	10	22.8	2.79	27.1	3.39	31.6	4.01	33.5	4.33	35.9	4.68	40.3	5.29	42.6	5.50
	12	22.8	2.83	27.1	3.44	31.6	4.06	33.5	4.39	35.9	4.77	40.3	5.38	42.0	5.46
	14	22.8	2.88	27.1	3.50	31.6	4.13	33.5	4.47	35.9	4.85	40.3	5.48	41.6	5.41
	16	22.8	2.94	27.1	3.57	31.6	4.23	33.5	4.57	35.9	4.96	40.2	5.60	41.0	5.54
	18	22.8	3.01	27.1	3.65	31.6	4.31	33.5	4.66	35.9	5.06	39.6	5.71	40.5	5.80
	20	22.8	3.05	27.1	3.71	31.6	4.45	33.5	4.90	35.9	5.38	39.0	6.01	39.9	6.10
	21	22.8	3.08	27.1	3.75	31.6	4.60	33.5	5.07	35.9	5.57	38.8	6.21	39.6	6.27
	23	22.8	3.16	27.1	4.00	31.6	4.95	33.5	5.45	35.9	5.99	38.3	6.58	39.0	6.64
	25	22.8	3.37	27.1	4.26	31.6	5.27	33.5	5.80	35.9	6.40	37.7	6.81	38.6	6.88
	27	22.8	3.60	27.1	4.55	31.6	5.65	33.5	6.22	35.9	6.87	37.1	7.05	38.0	7.12
	29	22.8	3.81	27.1	4.86	31.6	6.04	33.5	6.65	35.8	7.28	36.6	7.39	37.4	7.46
	31	22.8	4.05	27.1	5.18	31.6	6.44	33.5	7.17	35.3	7.57	35.8	7.69	36.9	7.76
	33	22.8	4.31	27.1	5.51	31.6	6.87	33.5	7.59	34.7	7.85	35.6	7.92	36.4	7.99
	35	22.8	4.59	27.1	5.87	31.6	7.32	33.5	8.09	34.1	8.13	34.9	8.20	35.8	8.28
	37	22.8	4.88	27.1	6.25	31.6	7.80	33.1	8.38	33.7	8.42	34.4	8.48	35.3	8.56
	39	22.8	5.20	27.1	6.66	31.6	8.30	32.7	8.66	32.9	8.70	34.0	8.76	34.4	8.84
	41	21.5	5.78	25.8	7.40	30.0	9.23	32.1	9.38	32.4	9.43	33.2	9.52	34.1	9.60
	43	20.3	6.02	24.5	7.72	29.3	9.72	31.5	9.97	32.0	9.79	32.5	9.76	33.7	9.85
	44	20.0	6.28	24.4	8.04	28.6	10.25	30.7	10.60	31.1	10.16	32.0	10.01	32.9	10.10
	47	18.9	8.36	23.6	10.70	27.6	10.76	29.6	10.76	30.0	10.81	30.9	10.75	31.8	10.84
	50	17.3	8.21	21.1	10.51	24.7	11.35	26.4	11.65	26.8	11.55	27.6	11.49	28.6	11.34
	52	13.6	6.34	18.3	7.89	22.6	8.88	24.9	9.32	25.1	9.02	25.7	8.90	27.1	9.13

TC—Total capacity of outdoor unit; PI—Power input of outdoor unit															
Connection ratio	Outdoor air temp. (℃ DB)	Indoor air temp.													
		14.0℃ WB		17.0℃ WB		18.0℃ WB		19.0℃ WB		20.0℃ WB		22.0℃ WB		24.0℃ WB	
		20.0℃ DB		24.0℃ DB		26.0℃ DB		27.0℃ DB		28.0℃ DB		30.0℃ DB		32.0℃ DB	
		TC	PI	TC	PI	TC	PI	TC	PI	TC	PI	TC	PI	TC	PI
		kW	kW	kW	kW	kW	kW	kW	kW	kW	kW	kW	kW	kW	kW
90%	-5	20.5	2.15	24.4	2.72	28.4	3.36	30.4	3.71	32.3	4.08	36.3	4.37	40.2	4.41
	0	20.5	2.15	24.4	2.72	28.4	3.36	30.4	3.72	32.3	4.09	36.3	4.37	40.2	4.41
	4	20.5	2.16	24.4	2.73	28.4	3.38	30.4	3.73	32.3	4.10	36.3	4.39	40.2	4.43
	7	20.5	2.20	24.4	2.79	28.4	3.44	30.4	3.80	32.3	4.18	36.3	4.47	40.2	4.51
	10	20.5	2.44	24.4	2.92	28.4	3.43	30.4	3.86	32.3	4.11	36.3	4.71	40.2	5.33
	12	20.5	2.47	24.4	2.96	28.4	3.47	30.4	3.91	32.3	4.19	36.3	4.79	40.2	5.40
	14	20.5	2.51	24.4	3.01	28.4	3.53	30.4	3.97	32.3	4.26	36.3	4.87	40.2	5.49
	16	20.5	2.57	24.4	3.08	28.4	3.61	30.4	4.06	32.3	4.36	36.3	4.98	40.1	5.60
	18	20.5	2.62	24.4	3.15	28.4	3.68	30.4	4.14	32.3	4.44	36.3	5.10	39.7	5.80
	20	20.5	2.66	24.4	3.20	28.4	3.80	30.4	4.22	32.3	4.63	36.3	5.48	39.0	6.04
	21	20.5	2.69	24.4	3.23	28.4	3.93	30.4	4.36	32.3	4.78	36.3	5.66	38.8	6.18
	23	20.5	2.76	24.4	3.45	28.4	4.23	30.4	4.69	32.3	5.12	36.3	6.08	38.2	6.50
	25	20.5	2.94	24.4	3.67	28.4	4.50	30.4	5.01	32.3	5.48	36.3	6.51	37.7	6.76
	27	20.5	3.14	24.4	3.92	28.4	4.82	30.4	5.34	32.3	5.86	36.3	6.94	37.1	7.06
	29	20.5	3.32	24.4	4.19	28.4	5.16	30.4	5.71	32.3	6.26	35.9	7.28	36.6	7.34
	31	20.5	3.54	24.4	4.47	28.4	5.50	30.4	6.09	32.3	6.68	35.3	7.54	36.0	7.64
	33	20.5	3.76	24.4	4.76	28.4	5.86	30.4	6.48	32.3	7.11	34.8	7.85	35.5	7.92
	35	20.5	4.00	24.4	5.06	28.4	6.25	30.4	6.91	32.3	7.60	34.2	8.13	34.9	8.20
	37	20.5	4.26	24.4	5.39	28.4	6.66	29.8	7.16	32.3	8.13	33.6	8.42	34.5	8.40
	39	20.5	4.54	24.4	5.74	28.4	7.09	29.4	7.39	32.3	8.62	33.1	8.74	33.9	8.71
	41	19.4	5.04	23.2	6.38	27.0	7.88	28.9	8.01	30.7	8.82	32.6	9.43	33.3	9.52
	43	18.3	5.26	22.0	6.65	26.3	8.31	28.3	8.52	30.1	9.15	32.0	9.67	32.7	9.78
	44	18.0	5.48	22.0	6.94	25.7	8.75	27.6	9.05	29.5	9.50	31.3	9.92	32.1	10.01
	47	17.0	7.29	21.2	9.23	24.9	9.19	26.7	9.19	28.4	10.11	30.3	10.65	31.1	10.75
	50	15.6	7.16	19.0	9.07	22.2	9.69	23.8	9.95	25.4	10.79	27.0	11.38	28.0	11.24
	52	12.3	5.91	16.5	7.36	20.4	8.28	22.4	8.69	22.6	8.41	23.4	8.29	24.4	8.52
80%	-5	18.2	1.86	21.7	2.29	25.3	2.85	27.0	3.13	28.7	3.42	32.3	4.06	35.8	4.35
	0	18.2	1.86	21.7	2.29	25.3	2.85	27.0	3.14	28.7	3.43	32.3	4.07	35.8	4.36
	4	18.2	1.87	21.7	2.30	25.3	2.86	27.0	3.15	28.7	3.44	32.3	4.09	35.8	4.38
	7	18.2	1.90	21.7	2.34	25.3	2.91	27.0	3.21	28.7	3.51	32.3	4.16	35.8	4.46
	10	18.2	2.21	21.7	2.65	25.3	3.12	27.0	3.36	28.7	3.60	32.3	4.11	35.8	4.77
	12	18.2	2.25	21.7	2.69	25.3	3.17	27.0	3.42	28.7	3.67	32.3	4.18	35.8	4.73
	14	18.2	2.29	21.7	2.75	25.3	3.23	27.0	3.48	28.7	3.73	32.3	4.25	35.8	4.84
	16	18.2	2.32	21.7	2.79	25.3	3.29	27.0	3.54	28.7	3.79	32.3	4.35	35.8	5.01
	18	18.2	2.37	21.7	2.85	25.3	3.37	27.0	3.62	28.7	3.86	32.3	4.44	35.8	5.36
	20	18.2	2.41	21.7	2.90	25.3	3.42	27.0	3.69	28.7	3.95	32.3	4.61	35.8	5.56
	21	18.2	2.43	21.7	2.92	25.3	3.46	27.0	3.73	28.7	4.04	32.3	4.77	35.8	5.95
	23	18.2	2.47	21.7	2.99	25.3	3.62	27.0	3.97	28.7	4.32	32.3	5.11	35.8	6.36
	25	18.2	2.55	21.7	3.17	25.3	3.87	27.0	4.24	28.7	4.61	32.3	5.47	35.8	6.79
	27	18.2	2.71	21.7	3.38	25.3	4.12	27.0	4.52	28.7	4.95	32.3	5.83	35.8	7.03
	29	18.2	2.89	21.7	3.60	25.3	4.39	27.0	4.82	28.6	5.27	32.3	6.23	35.8	7.29
	31	18.2	3.06	21.7	3.83	25.3	4.68	27.0	5.14	28.6	5.62	32.3	6.64	35.2	7.55
	33	18.2	3.26	21.7	4.26	25.3	4.98	27.0	5.47	28.6	5.99	32.3	7.09	34.7	7.82
	35	18.2	3.46	21.7	4.26	25.3	5.30	27.0	5.83	28.6	6.38	32.3	7.57	34.1	8.11
	37	18.2	3.66	21.7	4.59	25.3	5.64	26.5	6.21	28.6	6.79	32.3	8.06	33.6	8.41
	39	18.2	3.88	21.7	4.87	25.3	6.00	26.1	6.62	28.6	7.23	32.3	8.58	33.0	8.72
	41	17.2	4.35	20.6	5.37	24.0	6.68	25.7	6.77	27.2	7.40	30.7	8.78	32.5	9.40
	43	16.3	4.54	20.0	5.60	23.4	7.03	25.2	7.19	26.6	7.68	30.1	9.00	32.0	9.65
	44	16.0	4.74	19.5	5.84	22.9	7.42	24.6	7.64	26.1	7.97	29.6	9.23	31.4	9.89
	47	15.1	6.30	18.9	7.77	22.1	7.79	23.7	7.76	25.2	8.48	28.6	9.91	30.3	10.62
	50	13.8	6.19	16.9	7.63	19.7	8.21	21.1	8.40	22.5	9.05	25.5	10.59	27.3	11.11
	52	10.9	4.99	14.7	6.21	18.1	6.99	20.0	7.34	20.0	7.09	20.5	7.00	21.7	7.19

GMV X DC Inverter VRF Units

TC—Total capacity of outdoor unit; PI—Power input of outdoor unit															
Connection ratio	Outdoor air temp. (℃ DB)	Indoor air temp.													
		14.0℃ WB		17.0℃ WB		18.0℃ WB		19.0℃ WB		20.0℃ WB		22.0℃ WB		24.0℃ WB	
		20.0℃ DB		24.0℃ DB		26.0℃ DB		27.0℃ DB		28.0℃ DB		30.0℃ DB		32.0℃ DB	
		TC	PI	TC	PI	TC	PI	TC	PI	TC	PI	TC	PI	TC	PI
		kW	kW	kW	kW	kW	kW	kW	kW	kW	kW	kW	kW	kW	kW
70%	-5	15.9	1.58	19.0	1.96	22.1	2.37	23.6	2.60	25.2	2.83	28.2	3.34	31.3	3.88
	0	15.9	1.58	19.0	1.96	22.1	2.38	23.6	2.60	25.2	2.84	28.2	3.34	31.3	3.89
	4	15.9	1.59	19.0	1.97	22.1	2.38	23.6	2.61	25.2	2.85	28.2	3.36	31.3	3.90
	7	15.9	1.62	19.0	2.00	22.1	2.43	23.6	2.66	25.2	2.90	28.2	3.42	31.3	3.98
	10	15.9	1.95	19.0	2.31	22.1	2.69	23.6	2.90	25.1	3.11	28.2	3.53	31.3	3.97
	12	15.9	1.97	19.0	2.34	22.1	2.75	23.6	2.95	25.1	3.16	28.2	3.60	31.3	4.05
	14	15.9	2.01	19.0	2.39	22.1	2.79	23.6	3.00	25.1	3.22	28.2	3.66	31.3	4.12
	16	15.9	2.04	19.0	2.43	22.1	2.85	23.6	3.06	25.1	3.28	28.2	3.73	31.3	4.20
	18	15.9	2.07	19.0	2.47	22.1	2.90	23.6	3.12	25.1	3.34	28.2	3.81	31.3	4.28
	20	15.9	2.10	19.0	2.52	22.1	2.95	23.6	3.17	25.1	3.40	28.2	3.88	31.3	4.40
	21	15.9	2.13	19.0	2.54	22.1	2.98	23.6	3.21	25.1	3.43	28.2	3.93	31.3	4.56
	23	15.9	2.16	19.0	2.58	22.1	3.04	23.6	3.31	25.1	3.61	28.2	4.22	31.3	4.88
	25	15.9	2.20	19.0	2.69	22.1	3.24	23.6	3.54	25.1	3.85	28.2	4.51	31.3	5.22
	27	15.9	2.33	19.0	2.87	22.1	3.46	23.6	3.77	25.1	4.11	28.2	4.82	31.3	5.58
	29	15.9	2.47	19.0	3.04	22.1	3.67	23.6	4.02	25.1	4.37	28.2	5.14	31.3	5.96
	31	15.9	2.62	19.0	3.23	22.1	3.91	23.6	4.27	25.1	4.66	28.2	5.47	31.3	6.36
	33	15.9	2.78	19.0	3.43	22.1	4.16	23.6	4.55	25.1	4.96	28.2	5.83	31.3	6.78
	35	15.9	2.94	19.0	3.64	22.1	4.42	23.6	4.84	25.1	5.28	28.2	6.21	31.3	7.23
	37	15.9	3.11	19.0	3.86	22.1	4.70	23.2	5.15	25.1	5.62	28.2	6.62	31.3	7.70
	39	15.9	3.29	19.0	4.09	22.1	4.98	22.9	5.46	25.1	5.96	28.2	7.03	31.3	8.20
	41	15.1	3.71	18.0	4.59	21.0	5.56	22.4	5.62	23.9	6.12	26.9	7.21	29.9	8.39
	43	14.2	3.87	17.5	4.79	20.2	5.86	22.0	5.97	22.7	6.35	26.4	7.39	29.0	8.60
	44	14.0	4.03	17.1	4.99	20.0	6.18	21.5	6.34	22.9	6.60	25.9	7.58	28.8	8.82
	47	13.2	5.37	16.5	6.64	19.3	6.49	20.7	6.44	22.1	7.02	25.0	8.14	27.9	9.47
	50	12.1	5.27	14.8	6.52	17.3	6.84	18.5	6.97	19.7	7.49	22.3	8.70	25.1	9.90
	52	9.5	4.14	12.8	5.15	15.9	5.75	17.5	6.09	17.5	5.89	18.0	5.81	19.0	5.96
60%	-5	13.7	1.33	16.3	1.62	18.9	1.94	20.2	2.12	21.6	2.30	24.2	2.69	26.9	3.10
	0	13.7	1.33	16.3	1.62	18.9	1.95	20.2	2.12	21.6	2.31	24.2	2.69	26.9	3.11
	4	13.7	1.34	16.3	1.63	18.9	1.95	20.2	2.13	21.6	2.31	24.2	2.70	26.9	3.12
	7	13.7	1.36	16.3	1.66	18.9	1.99	20.2	2.17	21.6	2.36	24.2	2.75	26.9	3.18
	10	13.7	1.69	16.3	1.98	18.9	2.30	20.2	2.46	21.5	2.63	24.2	2.98	26.9	3.34
	12	13.7	1.72	16.3	2.02	18.9	2.34	20.2	2.51	21.5	2.67	24.2	3.03	26.9	3.39
	14	13.7	1.74	16.3	2.05	18.9	2.38	20.2	2.55	21.5	2.73	24.2	3.09	26.9	3.46
	16	13.7	1.77	16.3	2.08	18.9	2.42	20.2	2.59	21.5	2.77	24.2	3.14	26.9	3.52
	18	13.7	1.80	16.3	2.12	18.9	2.46	20.2	2.64	21.5	2.82	24.2	3.19	26.9	3.59
	20	13.7	1.82	16.3	2.16	18.9	2.51	20.2	2.69	21.5	2.88	24.2	3.26	26.9	3.66
	21	13.7	1.84	16.3	2.17	18.9	2.53	20.2	2.71	21.5	2.90	24.2	3.29	26.9	3.70
	23	13.7	1.86	16.3	2.21	18.9	2.57	20.2	2.77	21.5	2.95	24.2	3.42	26.9	3.94
	25	13.7	1.90	16.3	2.26	18.9	2.67	20.2	2.90	21.5	3.14	24.2	3.65	26.9	4.20
	27	13.7	1.97	16.3	2.39	18.9	2.85	20.2	3.10	21.5	3.35	24.2	3.89	26.9	4.48
	29	13.7	2.08	16.3	2.53	18.9	3.03	20.2	3.29	21.5	3.57	24.2	4.15	26.9	4.79
	31	13.7	2.21	16.3	2.69	18.9	3.22	20.2	3.50	21.5	3.79	24.2	4.42	26.9	5.09
	33	13.7	2.33	16.3	2.85	18.9	3.41	20.2	3.72	21.5	4.03	24.2	4.70	26.9	5.43
	35	13.7	2.47	16.3	3.02	18.9	3.62	20.2	3.95	21.5	4.28	24.2	5.00	26.9	5.78
	37	13.7	2.62	16.3	3.19	18.9	3.84	19.9	4.19	21.5	4.55	24.2	5.32	26.9	6.15
	39	13.7	2.76	16.3	3.38	18.9	4.07	19.6	4.44	21.5	4.83	24.2	5.65	26.9	6.54
	41	12.9	3.12	15.5	3.81	18.0	4.56	19.2	4.58	20.5	4.97	23.0	5.81	25.6	6.70
	43	12.2	3.25	14.7	3.97	17.5	4.81	18.9	4.86	19.9	5.16	22.8	5.95	25.1	6.88
	44	12.0	3.39	14.6	4.14	17.1	5.07	18.4	5.17	19.7	5.36	22.2	6.11	24.7	7.05
	47	11.3	4.51	14.2	5.51	16.6	5.32	17.8	5.25	19.0	5.70	21.4	6.56	23.9	7.57
	50	10.4	4.43	12.7	5.41	14.8	5.61	15.8	5.68	16.9	6.08	19.1	7.01	21.5	7.92
	52	8.2	3.38	11.0	4.20	13.6	4.73	15.0	4.96	15.0	4.80	15.4	4.74	16.3	4.86

TC—Total capacity of outdoor unit; PI—Power input of outdoor unit															
Connection ratio	Outdoor air temp. (℃ DB)	Indoor air temp.													
		14.0℃ WB		17.0℃ WB		18.0℃ WB		19.0℃ WB		20.0℃ WB		22.0℃ WB		24.0℃ WB	
		20.0℃ DB		24.0℃ DB		26.0℃ DB		27.0℃ DB		28.0℃ DB		30.0℃ DB		32.0℃ DB	
		TC	PI	TC	PI	TC	PI	TC	PI	TC	PI	TC	PI	TC	PI
		kW	kW	kW	kW	kW	kW	kW	kW	kW	kW	kW	kW	kW	kW
50%	-5	11.4	1.10	13.6	1.32	15.8	1.56	16.9	1.69	18.0	1.82	20.2	2.11	22.4	2.41
	0	11.4	1.10	13.6	1.32	15.8	1.56	16.9	1.69	18.0	1.82	20.2	2.11	22.4	2.42
	4	11.4	1.11	13.6	1.32	15.8	1.57	16.9	1.70	18.0	1.83	20.2	2.12	22.4	2.43
	7	11.4	1.13	13.6	1.35	15.8	1.60	16.9	1.73	18.0	1.86	20.2	2.16	22.4	2.47
	10	11.4	1.46	13.6	1.69	15.8	1.93	16.9	2.06	17.9	2.18	20.2	2.45	22.4	2.74
	12	11.4	1.47	13.6	1.71	15.8	1.96	16.9	2.08	17.9	2.22	20.2	2.50	22.4	2.78
	14	11.4	1.49	13.6	1.73	15.8	1.98	16.9	2.13	17.9	2.26	20.2	2.54	22.4	2.83
	16	11.4	1.52	13.6	1.76	15.8	2.02	16.9	2.16	17.9	2.29	20.2	2.58	22.4	2.88
	18	11.4	1.54	13.6	1.79	15.8	2.05	16.9	2.19	17.9	2.33	20.2	2.63	22.4	2.93
	20	11.4	1.56	13.6	1.81	15.8	2.08	16.9	2.24	17.9	2.38	20.2	2.68	22.4	2.99
	21	11.4	1.57	13.6	1.83	15.8	2.10	16.9	2.25	17.9	2.40	20.2	2.70	22.4	3.02
	23	11.4	1.59	13.6	1.85	15.8	2.14	16.9	2.29	17.9	2.44	20.2	2.75	22.4	3.09
	25	11.4	1.61	13.6	1.89	15.8	2.18	16.9	2.33	17.9	2.52	20.2	2.89	22.4	3.29
	27	11.4	1.65	13.6	1.96	15.8	2.30	16.9	2.49	17.9	2.67	20.2	3.07	22.4	3.51
	29	11.4	1.73	13.6	2.07	15.8	2.44	16.9	2.64	17.9	2.85	20.2	3.27	22.4	3.74
	31	11.4	1.83	13.6	2.19	15.8	2.61	16.9	2.80	17.9	3.02	20.2	3.48	22.4	3.98
	33	11.4	1.94	13.6	2.32	15.8	2.75	16.9	2.97	17.9	3.21	20.2	3.70	22.4	4.23
	35	11.4	2.05	13.6	2.45	15.8	2.90	16.9	3.14	17.9	3.39	20.2	3.93	22.4	4.49
	37	11.4	2.16	13.6	2.59	15.8	3.07	16.6	3.33	17.9	3.60	20.2	4.16	22.4	4.78
	39	11.4	2.28	13.6	2.74	15.8	3.25	16.3	3.52	17.9	3.82	20.2	4.42	22.4	5.07
	41	10.8	2.58	12.9	3.09	15.0	3.65	16.0	3.64	17.0	3.93	19.2	4.55	21.4	5.21
	43	10.2	2.70	12.2	3.24	14.6	3.85	15.7	3.90	16.7	4.09	18.7	4.67	20.8	5.35
	44	10.0	2.81	12.2	3.36	14.3	4.06	15.3	4.11	16.3	4.24	18.5	4.79	20.6	5.48
	47	9.4	3.74	11.8	4.47	13.8	4.26	14.8	4.18	15.7	4.51	17.9	5.14	19.9	5.88
	50	8.7	3.67	10.6	4.39	12.3	4.50	13.2	4.52	14.0	4.81	15.9	5.50	17.9	6.15
	52	6.8	2.69	9.2	3.34	11.3	3.76	12.5	3.95	12.5	3.82	12.8	3.77	13.6	3.87

GMV-400WM/B-X(P)

TC—Total capacity of outdoor unit; PI—Power input of outdoor unit															
Connection ratio	Outdoor air temp. (℃ DB)	Indoor air temp.													
		14.0℃ WB		17.0℃ WB		18.0℃ WB		19.0℃ WB		20.0℃ WB		22.0℃ WB		24.0℃ WB	
		20.0℃ DB		24.0℃ DB		26.0℃ DB		27.0℃ DB		28.0℃ DB		30.0℃ DB		32.0℃ DB	
		TC	PI	TC	PI	TC	PI	TC	PI	TC	PI	TC	PI	TC	PI
		kW	kW	kW	kW	kW	kW	kW	kW	kW	kW	kW	kW	kW	kW
135%	-5	35.4	4.27	42.2	5.20	48.9	5.26	50.8	5.29	51.7	5.32	53.0	5.38	54.3	5.44
	0	35.4	4.28	42.2	5.21	48.9	5.27	50.8	5.30	51.7	5.33	53.0	5.39	54.3	5.45
	4	35.4	4.30	42.2	5.23	48.9	5.29	50.8	5.32	51.7	5.35	53.0	5.41	54.3	5.47
	7	35.4	4.37	42.2	5.33	48.9	5.39	50.8	5.42	51.7	5.45	53.0	5.51	54.3	5.57
	10	35.4	4.45	42.2	5.44	48.9	6.47	50.8	6.61	51.4	6.48	52.7	6.21	53.9	5.92
	12	35.4	4.53	42.2	5.55	48.9	6.60	50.1	6.57	50.8	6.44	51.9	6.16	53.2	6.07
	14	35.4	4.62	42.2	5.65	48.8	6.68	49.5	6.55	50.1	6.41	51.4	6.35	52.7	6.42
	16	35.4	4.70	42.2	5.77	48.2	6.65	48.8	6.60	49.3	6.63	50.6	6.69	51.9	6.76
	18	35.4	4.79	42.2	5.88	47.5	6.90	48.0	6.94	48.8	6.98	50.1	7.04	51.4	7.11
	20	35.4	4.90	42.2	6.26	46.8	7.24	47.5	7.28	48.0	7.32	49.3	7.38	50.6	7.46
	21	35.4	5.03	42.2	6.48	46.5	7.41	47.2	7.45	47.8	7.49	49.1	7.56	50.4	7.63
	23	35.4	5.39	42.2	6.95	45.9	7.75	46.5	7.79	47.0	7.82	48.3	7.90	49.6	7.98
	25	35.4	5.75	42.2	7.45	45.2	8.08	45.9	8.12	46.5	8.18	47.8	8.25	49.1	8.33
	27	35.4	6.14	42.2	7.97	44.6	7.12	45.2	8.48	45.7	8.51	47.0	8.61	48.3	8.70
	29	35.4	6.56	42.2	8.51	43.9	8.76	44.5	8.81	45.2	8.87	46.5	8.96	47.8	9.05
	31	35.4	7.00	42.0	9.01	43.2	9.11	43.9	9.17	44.5	9.20	45.7	9.31	47.0	9.41
	33	35.4	7.46	41.3	9.35	42.6	9.44	43.2	9.50	43.9	9.56	45.2	9.66	46.3	9.78
	35	35.4	7.95	40.6	9.69	41.9	9.80	42.6	9.86	43.2	9.91	44.5	10.02	45.7	10.13
	37	35.4	8.46	40.0	10.04	41.3	10.15	41.9	10.21	42.6	10.27	43.7	10.39	45.0	10.51
	39	35.4	9.01	39.3	10.38	40.6	10.49	41.3	10.56	41.9	10.62	43.2	10.74	44.5	10.87
	41	33.4	10.02	38.5	12.20	39.8	12.35	40.5	11.43	41.0	11.49	42.3	11.63	43.6	11.75
	43	31.6	10.45	37.8	12.72	39.0	13.02	39.7	12.15	40.2	11.93	41.5	11.92	42.8	12.05
	44	31.1	10.90	36.5	13.27	37.9	13.72	38.8	12.91	39.4	12.38	40.7	12.23	42.1	12.36
	47	29.4	14.50	35.3	17.66	36.6	14.41	37.4	13.11	38.0	13.18	39.3	13.13	40.7	13.27
	50	26.9	14.24	31.6	17.34	32.7	15.19	33.3	14.19	33.9	14.07	35.1	14.03	36.6	13.88
	52	17.2	8.43	23.1	10.49	28.6	11.81	31.5	12.40	31.6	11.99	32.4	11.82	34.2	12.14
120%	-5	32.7	3.80	38.8	4.92	45.2	5.23	48.3	5.26	50.8	5.29	52.0	5.34	53.2	5.40
	0	32.7	3.81	38.8	4.93	45.2	5.24	48.3	5.27	50.8	5.30	52.0	5.35	53.2	5.41
	4	32.7	3.82	38.8	4.95	45.2	5.26	48.3	5.29	50.8	5.31	52.0	5.37	53.2	5.43
	7	32.7	3.90	38.8	5.04	45.2	5.36	48.3	5.38	50.8	5.41	52.0	5.47	53.2	5.53
	10	32.7	4.06	38.8	4.96	45.2	5.90	48.3	6.38	50.6	6.65	51.8	6.39	52.9	6.14
	12	32.7	4.14	38.8	5.05	45.2	6.01	48.3	6.50	49.9	6.61	51.1	6.37	52.2	6.11
	14	32.7	4.22	38.8	5.16	45.2	6.13	48.3	6.63	49.2	6.57	50.5	6.33	51.6	6.37
	16	32.7	4.30	38.8	5.26	45.2	6.25	48.0	6.68	48.6	6.59	49.8	6.65	50.9	6.70
	18	32.7	4.37	38.8	5.36	45.2	6.47	47.3	6.90	47.9	6.93	49.1	6.99	50.4	7.06
	20	32.7	4.47	38.8	5.57	45.2	6.95	46.8	7.24	47.3	7.26	48.5	7.33	49.6	7.39
	21	32.7	4.50	38.8	5.77	45.2	7.20	46.3	7.41	46.9	7.43	48.2	7.50	49.3	7.58
	23	32.7	4.82	38.8	6.18	45.2	7.71	45.7	7.73	46.3	7.77	47.5	7.85	48.6	7.92
	25	32.7	5.14	38.8	6.61	44.5	8.05	45.0	8.07	45.6	8.11	46.9	8.19	48.0	8.27
	27	32.7	5.49	38.8	7.07	43.9	8.37	44.5	8.42	45.0	8.46	46.2	8.54	47.3	8.62
	29	32.7	5.86	38.8	7.55	43.2	8.71	43.7	8.76	44.3	8.80	45.5	8.89	46.8	8.97
	31	32.7	6.25	38.8	8.06	42.6	9.06	43.2	9.10	43.7	9.15	44.9	9.24	46.0	9.33
	33	32.7	6.65	38.8	8.61	41.9	9.40	42.4	9.45	43.0	9.49	44.2	9.59	45.3	9.69
	35	32.7	7.08	38.8	9.17	41.1	9.74	41.7	9.79	42.4	9.84	43.6	9.95	44.7	10.05
	37	32.7	7.54	38.8	9.76	40.6	10.09	41.1	10.14	41.7	10.19	42.9	10.30	44.0	10.42
	39	32.7	8.02	38.7	10.31	39.8	10.43	40.4	10.49	41.0	10.55	42.3	10.66	43.4	10.77
	41	30.9	8.92	36.9	11.55	39.1	12.27	39.7	11.36	40.4	11.42	41.5	11.54	42.6	11.66
	43	29.2	9.30	35.2	12.04	38.4	12.93	38.9	12.07	39.7	11.85	40.7	11.83	41.8	11.96
	44	28.7	9.70	35.0	12.56	37.2	13.63	38.0	12.83	38.7	12.30	39.9	12.13	41.2	12.26
	47	27.1	12.91	33.8	16.71	36.0	14.32	36.6	13.02	37.3	13.09	38.6	13.03	39.8	13.17
	50	24.8	12.68	30.3	16.41	32.1	15.09	32.7	14.10	33.3	13.98	34.4	13.92	35.8	13.77
	52	16.8	8.37	22.6	10.42	28.0	11.73	30.8	12.31	31.0	11.91	31.7	11.75	33.5	12.06

TC—Total capacity of outdoor unit; PI—Power input of outdoor unit															
Connection ratio	Outdoor air temp. (℃ DB)	Indoor air temp.													
		14.0℃ WB		17.0℃ WB		18.0℃ WB		19.0℃ WB		20.0℃ WB		22.0℃ WB		24.0℃ WB	
		20.0℃ DB		24.0℃ DB		26.0℃ DB		27.0℃ DB		28.0℃ DB		30.0℃ DB		32.0℃ DB	
		TC	PI	TC	PI	TC	PI	TC	PI	TC	PI	TC	PI	TC	PI
		kW	kW	kW	kW	kW	kW	kW	kW	kW	kW	kW	kW	kW	kW
110%	-5	29.9	3.36	35.7	4.33	41.4	5.19	44.3	5.22	47.2	5.25	50.9	5.30	51.9	5.35
	0	29.9	3.37	35.7	4.34	41.4	5.20	44.3	5.23	47.2	5.26	50.9	5.31	51.9	5.36
	4	29.9	3.38	35.7	4.35	41.4	5.22	44.3	5.25	47.2	5.28	50.9	5.33	51.9	5.38
	7	29.9	3.44	35.7	4.43	41.4	5.32	44.3	5.35	47.2	5.38	50.9	5.43	51.9	5.48
	10	29.9	3.68	35.7	4.49	41.4	5.34	44.3	5.77	47.2	6.21	50.8	6.59	51.9	6.37
	12	29.9	3.76	35.7	4.58	41.4	5.44	44.3	5.88	47.2	6.33	50.2	6.56	51.2	6.33
	14	29.9	3.83	35.7	4.66	41.4	5.55	44.3	5.99	47.2	6.44	49.5	6.56	50.6	6.31
	16	29.9	3.89	35.7	4.75	41.4	5.65	44.3	6.11	47.2	6.57	48.9	6.60	49.9	6.67
	18	29.9	3.97	35.7	4.84	41.4	5.77	44.3	6.28	47.2	6.89	48.2	6.94	49.3	7.00
	20	29.9	4.05	35.7	4.95	41.4	6.11	44.3	6.74	46.5	7.23	47.6	7.28	48.6	7.34
	21	29.9	4.09	35.7	5.09	41.4	6.33	44.3	6.99	46.2	7.39	47.2	7.45	48.3	7.51
	23	29.9	4.28	35.7	5.45	41.4	6.78	44.3	7.50	45.5	7.72	46.6	7.80	47.6	7.86
	25	29.9	4.56	35.7	5.83	41.4	7.25	44.3	8.03	44.9	8.06	45.9	8.14	47.0	8.20
	27	29.9	4.87	35.7	6.24	41.4	7.76	43.6	8.37	44.2	8.40	45.3	8.48	46.3	8.55
	29	29.9	5.19	35.7	6.65	41.4	8.29	43.0	8.71	43.6	8.75	44.6	8.83	45.7	8.90
	31	29.9	5.53	35.7	7.10	41.4	8.85	42.3	9.05	42.9	9.09	44.0	9.17	45.0	9.26
	33	29.9	5.88	35.7	7.56	41.1	9.33	41.7	9.39	42.3	9.43	43.3	9.52	44.5	9.61
	35	29.9	6.26	35.7	8.06	40.6	9.67	41.0	9.73	41.6	9.78	42.6	9.87	43.7	9.96
	37	29.9	6.67	35.7	8.58	39.8	10.02	40.4	10.06	40.9	10.12	42.0	10.22	43.0	10.31
	39	29.9	7.08	35.7	9.14	39.1	10.36	39.7	10.42	40.3	10.47	41.3	10.57	42.4	10.68
	41	28.3	7.89	33.9	10.15	38.5	12.19	39.0	11.28	39.5	11.34	40.5	11.45	41.7	11.55
	43	26.7	8.23	32.2	10.59	38.0	12.84	38.2	11.99	38.8	11.77	39.8	11.74	40.9	11.84
	44	26.3	8.58	32.1	11.04	36.7	13.54	37.3	12.74	38.0	12.22	39.0	12.04	40.2	12.15
	47	24.8	11.42	31.0	14.69	35.5	14.22	36.0	12.93	36.6	13.00	37.7	12.93	38.9	13.05
	50	22.7	11.21	27.8	14.43	31.7	14.99	32.1	14.00	32.6	13.88	33.6	13.82	35.0	13.64
	52	16.5	8.32	22.3	10.35	27.5	11.65	30.3	12.23	30.5	11.83	31.2	11.67	32.9	11.98
100%	-5	27.2	2.94	32.4	3.77	37.7	4.69	40.0	5.19	42.9	5.21	48.2	5.26	50.9	5.31
	0	27.2	2.95	32.4	3.77	37.7	4.70	40.0	5.20	42.9	5.22	48.2	5.27	50.9	5.32
	4	27.2	2.96	32.4	3.79	37.7	4.72	40.0	5.22	42.9	5.24	48.2	5.29	50.9	5.34
	7	27.2	3.01	32.4	3.86	37.7	4.81	40.0	5.31	42.9	5.34	48.2	5.39	50.9	5.44
	10	27.2	3.33	32.4	4.05	37.7	4.79	40.0	5.17	42.9	5.58	48.2	6.32	50.9	6.57
	12	27.2	3.38	32.4	4.10	37.7	4.85	40.0	5.24	42.9	5.69	48.2	6.43	50.2	6.52
	14	27.2	3.44	32.4	4.17	37.7	4.94	40.0	5.34	42.9	5.80	48.2	6.54	49.6	6.46
	16	27.2	3.51	32.4	4.27	37.7	5.05	40.0	5.46	42.9	5.93	48.0	6.69	48.9	6.61
	18	27.2	3.59	32.4	4.36	37.7	5.14	40.0	5.56	42.9	6.04	47.3	6.82	48.3	6.92
	20	27.2	3.65	32.4	4.43	37.7	5.31	40.0	5.85	42.9	6.43	46.6	7.18	47.6	7.29
	21	27.2	3.68	32.4	4.47	37.7	5.50	40.0	6.05	42.9	6.65	46.3	7.42	47.3	7.49
	23	27.2	3.78	32.4	4.78	37.7	5.91	40.0	6.51	42.9	7.15	45.8	7.85	46.6	7.92
	25	27.2	4.02	32.4	5.09	37.7	6.29	40.0	6.92	42.9	7.64	45.0	8.14	46.0	8.21
	27	27.2	4.29	32.4	5.43	37.7	6.75	40.0	7.43	42.9	8.20	44.3	8.42	45.3	8.50
	29	27.2	4.55	32.4	5.80	37.7	7.21	40.0	7.95	42.7	8.69	43.7	8.83	44.7	8.91
	31	27.2	4.84	32.4	6.18	37.7	7.69	40.0	8.56	42.2	9.04	42.7	9.19	44.0	9.27
	33	27.2	5.15	32.4	6.58	37.7	8.20	40.0	9.06	41.4	9.37	42.5	9.45	43.4	9.54
	35	27.2	5.48	32.4	7.01	37.7	8.74	40.0	9.66	40.7	9.71	41.7	9.80	42.7	9.88
	37	27.2	5.83	32.4	7.47	37.7	9.31	39.6	10.01	40.2	10.06	41.1	10.13	42.1	10.22
	39	27.2	6.21	32.4	7.95	37.7	9.92	39.0	10.34	39.2	10.39	40.6	10.46	41.1	10.56
	41	25.7	6.90	30.8	8.83	35.8	11.02	38.3	11.21	38.7	11.26	39.7	11.36	40.7	11.47
	43	24.3	7.19	29.2	9.22	35.0	11.61	37.6	11.91	38.2	11.69	38.8	11.65	40.3	11.76
	44	23.9	7.50	29.1	9.61	34.1	12.24	36.7	12.65	37.2	12.14	38.2	11.95	39.3	12.06
	47	22.6	9.98	28.2	12.78	33.0	12.85	35.4	12.85	35.8	12.91	36.9	12.83	38.0	12.95
	50	20.7	9.80	25.2	12.55	29.4	13.55	31.5	13.91	32.0	13.79	32.9	13.71	34.2	13.54
	52	16.3	7.57	21.9	9.42	27.0	10.61	29.8	11.13	29.9	10.77	30.6	10.62	32.4	10.91

GMV X DC Inverter VRF Units

TC—Total capacity of outdoor unit; PI—Power input of outdoor unit															
Connection ratio	Outdoor air temp. (℃ DB)	Indoor air temp.													
		14.0℃ WB		17.0℃ WB		18.0℃ WB		19.0℃ WB		20.0℃ WB		22.0℃ WB		24.0℃ WB	
		20.0℃ DB		24.0℃ DB		26.0℃ DB		27.0℃ DB		28.0℃ DB		30.0℃ DB		32.0℃ DB	
		TC	PI	TC	PI	TC	PI	TC	PI	TC	PI	TC	PI	TC	PI
		kW	kW	kW	kW	kW	kW	kW	kW	kW	kW	kW	kW	kW	kW
90%	-5	24.5	2.57	29.1	3.25	33.9	4.01	36.3	4.43	38.6	4.87	43.3	5.21	48.0	5.26
	0	24.5	2.57	29.1	3.25	33.9	4.02	36.3	4.44	38.6	4.88	43.3	5.22	48.0	5.27
	4	24.5	2.58	29.1	3.27	33.9	4.03	36.3	4.45	38.6	4.90	43.3	5.24	48.0	5.29
	7	24.5	2.63	29.1	3.33	33.9	4.11	36.3	4.54	38.6	4.99	43.3	5.34	48.0	5.39
	10	24.5	2.91	29.1	3.49	33.9	4.09	36.3	4.61	38.6	4.91	43.4	5.62	48.0	6.37
	12	24.5	2.95	29.1	3.54	33.9	4.14	36.3	4.67	38.6	5.00	43.4	5.72	48.0	6.45
	14	24.5	3.00	29.1	3.60	33.9	4.22	36.3	4.74	38.6	5.09	43.4	5.82	48.0	6.56
	16	24.5	3.06	29.1	3.68	33.9	4.31	36.3	4.85	38.6	5.20	43.4	5.95	47.9	6.68
	18	24.5	3.13	29.1	3.76	33.9	4.39	36.3	4.94	38.6	5.30	43.4	6.09	47.5	6.93
	20	24.5	3.18	29.1	3.82	33.9	4.54	36.3	5.04	38.6	5.52	43.4	6.54	46.6	7.21
	21	24.5	3.21	29.1	3.86	33.9	4.69	36.3	5.21	38.6	5.71	43.4	6.76	46.3	7.38
	23	24.5	3.30	29.1	4.12	33.9	5.05	36.3	5.60	38.6	6.12	43.4	7.26	45.6	7.76
	25	24.5	3.51	29.1	4.39	33.9	5.37	36.3	5.98	38.6	6.54	43.4	7.77	45.0	8.07
	27	24.5	3.75	29.1	4.69	33.9	5.76	36.3	6.38	38.6	7.00	43.4	8.29	44.3	8.43
	29	24.5	3.97	29.1	5.01	33.9	6.16	36.3	6.82	38.6	7.47	42.9	8.69	43.7	8.77
	31	24.5	4.22	29.1	5.33	33.9	6.57	36.3	7.27	38.6	7.98	42.2	9.00	43.0	9.12
	33	24.5	4.49	29.1	5.68	33.9	7.00	36.3	7.74	38.6	8.48	41.6	9.37	42.4	9.45
	35	24.5	4.78	29.1	6.05	33.9	7.47	36.3	8.25	38.6	9.07	40.9	9.71	41.7	9.80
	37	24.5	5.09	29.1	6.44	33.9	7.95	35.6	8.55	38.6	9.71	40.1	10.06	41.1	10.03
	39	24.5	5.42	29.1	6.86	33.9	8.47	35.1	8.83	38.6	10.29	39.6	10.43	40.4	10.40
	41	23.1	6.02	27.7	7.62	32.2	9.41	34.5	9.57	36.7	10.53	38.9	11.26	39.8	11.36
	43	21.9	6.28	26.3	7.94	31.4	9.92	33.8	10.17	36.0	10.93	38.2	11.55	39.1	11.67
	44	21.5	6.55	26.2	8.28	30.7	10.45	33.0	10.81	35.2	11.34	37.4	11.85	38.4	11.95
	47	20.3	8.71	25.3	11.02	29.7	10.97	31.8	10.97	34.0	12.07	36.2	12.72	37.1	12.83
	50	18.6	8.55	22.7	10.82	26.5	11.57	28.4	11.88	30.3	12.89	32.3	13.59	33.4	13.42
	52	14.6	7.06	19.7	8.79	24.3	9.89	26.8	10.38	26.9	10.04	27.9	9.90	29.1	10.17
80%	-5	21.8	2.22	25.9	2.73	30.2	3.40	32.2	3.74	34.2	4.09	38.6	4.85	42.7	5.20
	0	21.8	2.22	25.9	2.74	30.2	3.40	32.2	3.75	34.2	4.10	38.6	4.86	42.7	5.21
	4	21.8	2.23	25.9	2.75	30.2	3.42	32.2	3.76	34.2	4.11	38.6	4.88	42.7	5.23
	7	21.8	2.27	25.9	2.80	30.2	3.48	32.2	3.83	34.2	4.19	38.6	4.97	42.7	5.32
	10	21.8	2.64	25.9	3.16	30.2	3.72	32.2	4.01	34.3	4.29	38.5	4.91	42.7	5.70
	12	21.8	2.68	25.9	3.22	30.2	3.79	32.2	4.09	34.3	4.38	38.5	4.99	42.7	5.65
	14	21.8	2.73	25.9	3.28	30.2	3.85	32.2	4.15	34.3	4.46	38.5	5.08	42.7	5.78
	16	21.8	2.77	25.9	3.33	30.2	3.93	32.2	4.23	34.3	4.52	38.5	5.19	42.7	5.99
	18	21.8	2.83	25.9	3.40	30.2	4.02	32.2	4.32	34.3	4.61	38.5	5.31	42.7	6.40
	20	21.8	2.88	25.9	3.46	30.2	4.09	32.2	4.40	34.3	4.72	38.5	5.50	42.7	6.64
	21	21.8	2.90	25.9	3.49	30.2	4.13	32.2	4.45	34.3	4.82	38.5	5.70	42.7	7.11
	23	21.8	2.96	25.9	3.57	30.2	4.32	32.2	4.74	34.3	5.16	38.5	6.10	42.7	7.60
	25	21.8	3.05	25.9	3.79	30.2	4.62	32.2	5.06	34.3	5.50	38.5	6.53	42.7	8.11
	27	21.8	3.24	25.9	4.04	30.2	4.92	32.2	5.40	34.3	5.91	38.5	6.97	42.7	8.40
	29	21.8	3.45	25.9	4.30	30.2	5.25	32.2	5.75	34.2	6.30	38.5	7.43	42.7	8.70
	31	21.8	3.66	25.9	4.57	30.2	5.59	32.2	6.13	34.2	6.71	38.5	7.93	42.0	9.02
	33	21.8	3.89	25.9	5.09	30.2	5.95	32.2	6.53	34.2	7.15	38.5	8.47	41.4	9.34
	35	21.8	4.13	25.9	5.09	30.2	6.33	32.2	6.96	34.2	7.61	38.5	9.04	40.7	9.68
	37	21.8	4.37	25.9	5.48	30.2	6.73	31.6	7.42	34.2	8.11	38.5	9.62	40.1	10.04
	39	21.8	4.63	25.9	5.82	30.2	7.16	31.2	7.90	34.2	8.63	38.5	10.25	39.4	10.41
	41	20.6	5.20	24.6	6.41	28.7	7.97	30.6	8.08	32.5	8.83	36.7	10.48	38.8	11.23
	43	19.4	5.42	23.9	6.69	27.9	8.40	30.1	8.59	31.8	9.17	36.0	10.75	38.2	11.52
	44	19.1	5.65	23.3	6.97	27.3	8.86	29.3	9.12	31.2	9.52	35.3	11.02	37.5	11.81
	47	18.1	7.52	22.5	9.28	26.4	9.30	28.3	9.26	30.1	10.12	34.1	11.84	36.2	12.68
	50	16.5	7.39	20.2	9.11	23.5	9.81	25.2	10.03	26.8	10.81	30.4	12.65	32.6	13.26
	52	13.0	5.96	17.5	7.41	21.6	8.34	23.8	8.76	23.9	8.47	24.5	8.36	25.9	8.58

TC—Total capacity of outdoor unit; PI—Power input of outdoor unit															
Connection ratio	Outdoor air temp. (℃ DB)	Indoor air temp.													
		14.0℃ WB		17.0℃ WB		18.0℃ WB		19.0℃ WB		20.0℃ WB		22.0℃ WB		24.0℃ WB	
		20.0℃ DB		24.0℃ DB		26.0℃ DB		27.0℃ DB		28.0℃ DB		30.0℃ DB		32.0℃ DB	
		TC	PI	TC	PI	TC	PI	TC	PI	TC	PI	TC	PI	TC	PI
		kW	kW	kW	kW	kW	kW	kW	kW	kW	kW	kW	kW	kW	kW
70%	-5	19.0	1.89	22.7	2.34	26.4	2.83	28.2	3.10	30.1	3.38	33.7	3.98	37.4	4.64
	0	19.0	1.89	22.7	2.34	26.4	2.84	28.2	3.11	30.1	3.39	33.7	3.99	37.4	4.64
	4	19.0	1.90	22.7	2.35	26.4	2.85	28.2	3.12	30.1	3.40	33.7	4.01	37.4	4.66
	7	19.0	1.93	22.7	2.39	26.4	2.90	28.2	3.18	30.1	3.47	33.7	4.08	37.4	4.75
	10	19.0	2.33	22.7	2.76	26.4	3.22	28.2	3.46	30.0	3.71	33.7	4.22	37.4	4.74
	12	19.0	2.36	22.7	2.80	26.4	3.28	28.2	3.53	30.0	3.78	33.7	4.30	37.4	4.83
	14	19.0	2.40	22.7	2.85	26.4	3.33	28.2	3.58	30.0	3.84	33.7	4.37	37.4	4.92
	16	19.0	2.43	22.7	2.90	26.4	3.40	28.2	3.66	30.0	3.92	33.7	4.45	37.4	5.01
	18	19.0	2.47	22.7	2.96	26.4	3.46	28.2	3.72	30.0	3.98	33.7	4.54	37.4	5.12
	20	19.0	2.51	22.7	3.01	26.4	3.53	28.2	3.79	30.0	4.06	33.7	4.63	37.4	5.26
	21	19.0	2.54	22.7	3.03	26.4	3.55	28.2	3.83	30.0	4.10	33.7	4.69	37.4	5.44
	23	19.0	2.58	22.7	3.09	26.4	3.63	28.2	3.96	30.0	4.31	33.7	5.04	37.4	5.83
	25	19.0	2.63	22.7	3.22	26.4	3.87	28.2	4.23	30.0	4.60	33.7	5.39	37.4	6.24
	27	19.0	2.79	22.7	3.42	26.4	4.13	28.2	4.50	30.0	4.91	33.7	5.75	37.4	6.67
	29	19.0	2.96	22.7	3.63	26.4	4.39	28.2	4.80	30.0	5.22	33.7	6.13	37.4	7.12
	31	19.0	3.12	22.7	3.85	26.4	4.67	28.2	5.10	30.0	5.56	33.7	6.54	37.4	7.59
	33	19.0	3.32	22.7	4.10	26.4	4.97	28.2	5.43	30.0	5.92	33.7	6.97	37.4	8.10
	35	19.0	3.52	22.7	4.35	26.4	5.27	28.2	5.78	30.0	6.30	33.7	7.42	37.4	8.63
	37	19.0	3.71	22.7	4.61	26.4	5.61	27.7	6.14	30.0	6.70	33.7	7.90	37.4	9.19
	39	19.0	3.93	22.7	4.88	26.4	5.95	27.3	6.52	30.0	7.12	33.7	8.40	37.4	9.79
	41	18.0	4.43	21.5	5.48	25.1	6.64	26.8	6.71	28.5	7.31	32.1	8.61	35.6	10.01
	43	17.0	4.62	20.9	5.72	24.2	7.00	26.3	7.13	27.1	7.58	31.5	8.82	34.7	10.27
	44	16.7	4.82	20.4	5.96	23.9	7.38	25.7	7.57	27.4	7.88	30.9	9.05	34.4	10.53
	47	15.8	6.41	19.7	7.93	23.1	7.75	24.8	7.69	26.4	8.38	29.8	9.72	33.3	11.31
	50	14.5	6.29	17.7	7.78	20.6	8.17	22.1	8.32	23.6	8.95	26.6	10.39	29.9	11.83
	52	11.4	4.94	15.3	6.15	18.9	6.86	20.8	7.27	20.9	7.03	21.4	6.94	22.7	7.12
60%	-5	16.3	1.59	19.4	1.94	22.6	2.32	24.2	2.53	25.8	2.75	28.9	3.21	32.1	3.71
	0	16.3	1.59	19.4	1.94	22.6	2.33	24.2	2.54	25.8	2.75	28.9	3.21	32.1	3.71
	4	16.3	1.60	19.4	1.95	22.6	2.33	24.2	2.54	25.8	2.76	28.9	3.23	32.1	3.73
	7	16.3	1.63	19.4	1.98	22.6	2.38	24.2	2.59	25.8	2.81	28.9	3.29	32.1	3.79
	10	16.3	2.02	19.4	2.37	22.6	2.75	24.2	2.94	25.7	3.14	28.9	3.55	32.1	3.98
	12	16.3	2.06	19.4	2.41	22.6	2.80	24.2	2.99	25.7	3.19	28.9	3.62	32.1	4.05
	14	16.3	2.08	19.4	2.45	22.6	2.84	24.2	3.05	25.7	3.25	28.9	3.68	32.1	4.13
	16	16.3	2.11	19.4	2.49	22.6	2.89	24.2	3.10	25.7	3.31	28.9	3.75	32.1	4.21
	18	16.3	2.15	19.4	2.53	22.6	2.94	24.2	3.15	25.7	3.37	28.9	3.81	32.1	4.28
	20	16.3	2.17	19.4	2.58	22.6	2.99	24.2	3.22	25.7	3.44	28.9	3.89	32.1	4.37
	21	16.3	2.20	19.4	2.59	22.6	3.02	24.2	3.24	25.7	3.46	28.9	3.93	32.1	4.41
	23	16.3	2.23	19.4	2.64	22.6	3.07	24.2	3.31	25.7	3.53	28.9	4.09	32.1	4.70
	25	16.3	2.27	19.4	2.69	22.6	3.19	24.2	3.46	25.7	3.75	28.9	4.36	32.1	5.01
	27	16.3	2.36	19.4	2.85	22.6	3.40	24.2	3.70	25.7	4.00	28.9	4.65	32.1	5.35
	29	16.3	2.49	19.4	3.02	22.6	3.62	24.2	3.93	25.7	4.26	28.9	4.96	32.1	5.72
	31	16.3	2.64	19.4	3.22	22.6	3.84	24.2	4.18	25.7	4.53	28.9	5.27	32.1	6.08
	33	16.3	2.79	19.4	3.40	22.6	4.07	24.2	4.44	25.7	4.82	28.9	5.61	32.1	6.48
	35	16.3	2.96	19.4	3.61	22.6	4.32	24.2	4.71	25.7	5.12	28.9	5.98	32.1	6.90
	37	16.3	3.12	19.4	3.81	22.6	4.58	23.7	5.00	25.7	5.43	28.9	6.35	32.1	7.34
	39	16.3	3.29	19.4	4.04	22.6	4.86	23.4	5.30	25.7	5.77	28.9	6.74	32.1	7.81
	41	15.4	3.72	18.5	4.54	21.5	5.45	23.0	5.47	24.5	5.94	27.5	6.93	30.6	8.00
	43	14.6	3.88	17.5	4.73	20.9	5.74	22.5	5.81	23.7	6.16	27.2	7.11	29.9	8.21
	44	14.4	4.05	17.5	4.94	20.5	6.05	22.0	6.17	23.5	6.40	26.5	7.29	29.5	8.42
	47	13.5	5.39	16.9	6.57	19.8	6.35	21.2	6.27	22.6	6.80	25.6	7.83	28.6	9.04
	50	12.4	5.29	15.1	6.46	17.7	6.70	18.9	6.79	20.2	7.27	22.8	8.37	25.7	9.45
	52	9.8	4.03	13.1	5.02	16.2	5.65	17.9	5.93	18.0	5.73	18.4	5.65	19.4	5.81

GMV X DC Inverter VRF Units

TC—Total capacity of outdoor unit; PI—Power input of outdoor unit															
Connection ratio	Outdoor air temp. (℃ DB)	Indoor air temp.													
		14.0℃ WB		17.0℃ WB		18.0℃ WB		19.0℃ WB		20.0℃ WB		22.0℃ WB		24.0℃ WB	
		20.0℃ DB		24.0℃ DB		26.0℃ DB		27.0℃ DB		28.0℃ DB		30.0℃ DB		32.0℃ DB	
		TC	PI	TC	PI	TC	PI	TC	PI	TC	PI	TC	PI	TC	PI
		kW	kW	kW	kW	kW	kW	kW	kW	kW	kW	kW	kW	kW	kW
50%	-5	13.6	1.31	16.2	1.57	18.8	1.86	20.1	2.01	21.4	2.17	24.1	2.52	26.8	2.88
	0	13.6	1.32	16.2	1.58	18.8	1.86	20.1	2.02	21.4	2.18	24.1	2.52	26.8	2.89
	4	13.6	1.32	16.2	1.58	18.8	1.87	20.1	2.02	21.4	2.19	24.1	2.53	26.8	2.90
	7	13.6	1.35	16.2	1.61	18.8	1.90	20.1	2.06	21.4	2.23	24.1	2.58	26.8	2.95
	10	13.6	1.74	16.2	2.02	18.8	2.30	20.1	2.46	21.4	2.60	24.1	2.93	26.8	3.27
	12	13.6	1.76	16.2	2.04	18.8	2.34	20.1	2.49	21.4	2.66	24.1	2.98	26.8	3.32
	14	13.6	1.78	16.2	2.07	18.8	2.37	20.1	2.54	21.4	2.69	24.1	3.03	26.8	3.38
	16	13.6	1.81	16.2	2.10	18.8	2.41	20.1	2.58	21.4	2.73	24.1	3.09	26.8	3.44
	18	13.6	1.84	16.2	2.14	18.8	2.45	20.1	2.62	21.4	2.79	24.1	3.14	26.8	3.50
	20	13.6	1.86	16.2	2.16	18.8	2.49	20.1	2.67	21.4	2.84	24.1	3.20	26.8	3.57
	21	13.6	1.87	16.2	2.19	18.8	2.51	20.1	2.68	21.4	2.86	24.1	3.23	26.8	3.61
	23	13.6	1.90	16.2	2.21	18.8	2.55	20.1	2.73	21.4	2.92	24.1	3.28	26.8	3.68
	25	13.6	1.93	16.2	2.25	18.8	2.60	20.1	2.79	21.4	3.01	24.1	3.45	26.8	3.93
	27	13.6	1.97	16.2	2.34	18.8	2.75	20.1	2.97	21.4	3.19	24.1	3.67	26.8	4.19
	29	13.6	2.07	16.2	2.47	18.8	2.92	20.1	3.15	21.4	3.40	24.1	3.91	26.8	4.47
	31	13.6	2.19	16.2	2.62	18.8	3.11	20.1	3.35	21.4	3.61	24.1	4.15	26.8	4.75
	33	13.6	2.32	16.2	2.77	18.8	3.28	20.1	3.54	21.4	3.83	24.1	4.41	26.8	5.05
	35	13.6	2.45	16.2	2.93	18.8	3.46	20.1	3.75	21.4	4.05	24.1	4.69	26.8	5.36
	37	13.6	2.58	16.2	3.10	18.8	3.67	19.8	3.97	21.4	4.30	24.1	4.97	26.8	5.70
	39	13.6	2.72	16.2	3.27	18.8	3.88	19.5	4.21	21.4	4.56	24.1	5.27	26.8	6.05
	41	12.8	3.08	15.4	3.69	17.9	4.36	19.1	4.35	20.3	4.70	22.9	5.44	25.5	6.22
	43	12.1	3.22	14.6	3.87	17.4	4.60	18.8	4.66	20.0	4.88	22.3	5.58	24.9	6.38
	44	12.0	3.35	14.6	4.01	17.1	4.85	18.3	4.91	19.5	5.06	22.1	5.72	24.6	6.54
	47	11.3	4.46	14.1	5.34	16.5	5.09	17.7	4.99	18.8	5.38	21.3	6.14	23.8	7.03
	50	10.3	4.38	12.6	5.24	14.7	5.37	15.8	5.40	16.8	5.75	19.0	6.56	21.4	7.35
	52	8.1	3.21	10.9	3.99	13.5	4.49	14.9	4.72	15.0	4.56	15.3	4.50	16.2	4.62

GMV-450WM/B-X(P)

TC—Total capacity of outdoor unit; PI—Power input of outdoor unit															
Connection ratio	Outdoor air temp. (℃ DB)	Indoor air temp.													
		14.0℃ WB		17.0℃ WB		18.0℃ WB		19.0℃ WB		20.0℃ WB		22.0℃ WB		24.0℃ WB	
		20.0℃ DB		24.0℃ DB		26.0℃ DB		27.0℃ DB		28.0℃ DB		30.0℃ DB		32.0℃ DB	
		TC	PI	TC	PI	TC	PI	TC	PI	TC	PI	TC	PI	TC	PI
		kW	kW	kW	kW	kW	kW	kW	kW	kW	kW	kW	kW	kW	kW
135%	-5	39.8	5.01	47.4	6.11	55.0	6.18	57.1	6.21	58.2	6.25	59.7	6.32	61.1	6.39
	0	39.8	5.02	47.4	6.12	55.0	6.19	57.1	6.22	58.2	6.26	59.7	6.33	61.1	6.40
	4	39.8	5.04	47.4	6.14	55.0	6.21	57.1	6.25	58.2	6.28	59.7	6.35	61.1	6.42
	7	39.8	5.14	47.4	6.25	55.0	6.33	57.1	6.36	58.2	6.40	59.7	6.47	61.1	6.54
	10	39.8	5.23	47.4	6.39	55.0	7.60	57.1	7.76	57.8	7.61	59.2	7.29	60.7	6.95
	12	39.8	5.32	47.4	6.51	55.0	7.75	56.3	7.72	57.1	7.57	58.4	7.23	59.9	7.12
	14	39.8	5.43	47.4	6.63	54.9	7.84	55.7	7.69	56.3	7.52	57.8	7.46	59.2	7.53
	16	39.8	5.52	47.4	6.77	54.2	7.81	54.9	7.75	55.5	7.78	57.0	7.86	58.4	7.93
	18	39.8	5.62	47.4	6.91	53.4	8.10	54.1	8.15	54.9	8.19	56.3	8.27	57.8	8.34
	20	39.8	5.75	47.4	7.35	52.6	8.50	53.4	8.54	54.1	8.59	55.5	8.67	57.0	8.76
	21	39.8	5.90	47.4	7.61	52.3	8.70	53.1	8.74	53.7	8.79	55.2	8.88	56.6	8.96
	23	39.8	6.33	47.4	8.16	51.6	9.09	52.3	9.14	52.9	9.19	54.4	9.28	55.8	9.37
	25	39.8	6.76	47.4	8.74	50.8	9.49	51.6	9.54	52.3	9.60	53.7	9.69	55.2	9.78
	27	39.8	7.21	47.4	9.35	50.2	8.36	50.8	9.95	51.5	10.00	52.9	10.10	54.4	10.21
	29	39.8	7.70	47.4	10.00	49.4	10.29	50.0	10.35	50.8	10.41	52.3	10.51	53.7	10.62
	31	39.8	8.22	47.3	10.58	48.6	10.70	49.4	10.76	50.0	10.81	51.5	10.93	52.9	11.05
	33	39.8	8.76	46.4	10.97	47.9	11.08	48.6	11.16	49.4	11.22	50.8	11.34	52.1	11.48
	35	39.8	9.34	45.6	11.37	47.1	11.51	47.9	11.57	48.6	11.63	50.0	11.77	51.5	11.89
	37	39.8	9.93	45.0	11.78	46.4	11.92	47.1	11.98	47.9	12.06	49.2	12.20	50.7	12.33
	39	39.8	10.58	44.2	12.18	45.6	12.32	46.4	12.39	47.1	12.47	48.6	12.61	50.0	12.76
	41	37.6	11.77	43.4	14.33	44.7	14.50	45.5	13.42	46.2	13.49	47.6	13.65	49.0	13.79
	43	35.6	12.27	42.5	14.93	43.9	15.28	44.6	14.26	45.3	14.00	46.7	13.99	48.1	14.14
	44	35.0	12.79	41.1	15.58	42.6	16.11	43.6	15.16	44.3	14.54	45.8	14.36	47.3	14.51
	47	33.0	17.02	39.7	20.73	41.2	16.92	42.1	15.39	42.7	15.47	44.3	15.42	45.8	15.58
	50	30.3	16.71	35.6	20.35	36.8	17.84	37.5	16.66	38.1	16.52	39.5	16.48	41.2	16.29
	52	19.3	9.89	26.0	12.32	32.2	13.86	35.4	14.55	35.6	14.07	36.4	13.88	38.5	14.25
120%	-5	36.7	4.46	43.7	5.78	50.8	6.14	54.4	6.17	57.2	6.20	58.5	6.27	59.8	6.34
	0	36.7	4.47	43.7	5.79	50.8	6.15	54.4	6.18	57.2	6.22	58.5	6.28	59.8	6.35
	4	36.7	4.49	43.7	5.81	50.8	6.17	54.4	6.21	57.2	6.24	58.5	6.31	59.8	6.37
	7	36.7	4.57	43.7	5.92	50.8	6.29	54.4	6.32	57.2	6.35	58.5	6.42	59.8	6.49
	10	36.7	4.77	43.7	5.82	50.8	6.92	54.4	7.49	57.0	7.81	58.3	7.50	59.6	7.21
	12	36.7	4.86	43.7	5.93	50.8	7.06	54.4	7.63	56.2	7.76	57.5	7.47	58.7	7.17
	14	36.7	4.95	43.7	6.05	50.8	7.20	54.4	7.78	55.3	7.72	56.8	7.43	58.1	7.47
	16	36.7	5.04	43.7	6.17	50.8	7.34	54.1	7.84	54.7	7.73	56.0	7.81	57.3	7.87
	18	36.7	5.14	43.7	6.30	50.8	7.60	53.2	8.10	53.9	8.13	55.2	8.21	56.6	8.28
	20	36.7	5.24	43.7	6.54	50.8	8.16	52.6	8.50	53.2	8.53	54.5	8.60	55.8	8.68
	21	36.7	5.29	43.7	6.77	50.8	8.45	52.1	8.70	52.8	8.73	54.2	8.80	55.5	8.89
	23	36.7	5.65	43.7	7.26	50.8	9.05	51.5	9.08	52.1	9.12	53.4	9.22	54.7	9.29
	25	36.7	6.04	43.7	7.76	50.0	9.44	50.7	9.48	51.3	9.52	52.8	9.61	54.1	9.70
	27	36.7	6.45	43.7	8.30	49.4	9.83	50.0	9.89	50.7	9.93	51.9	10.03	53.2	10.12
	29	36.7	6.88	43.7	8.86	48.6	10.22	49.2	10.29	49.8	10.33	51.1	10.44	52.6	10.53
	31	36.7	7.34	43.7	9.46	47.9	10.64	48.6	10.68	49.2	10.74	50.5	10.85	51.8	10.96
	33	36.7	7.81	43.7	10.10	47.1	11.03	47.7	11.10	48.4	11.14	49.7	11.26	51.0	11.37
	35	36.7	8.31	43.7	10.76	46.3	11.43	46.9	11.49	47.7	11.55	49.0	11.68	50.3	11.80
	37	36.7	8.85	43.7	11.46	45.6	11.84	46.3	11.91	46.9	11.97	48.2	12.09	49.5	12.23
	39	36.7	9.41	43.5	12.10	44.8	12.24	45.5	12.32	46.1	12.38	47.6	12.52	48.9	12.64
	41	34.7	10.48	41.5	13.56	44.0	14.40	44.6	13.33	45.4	13.40	46.7	13.54	48.0	13.69
	43	32.8	10.92	39.6	14.13	43.1	15.18	43.8	14.16	44.7	13.91	45.8	13.89	47.1	14.04
	44	32.3	11.39	39.3	14.74	41.9	16.00	42.7	15.06	43.6	14.44	44.9	14.24	46.3	14.39
	47	30.5	15.16	38.0	19.61	40.5	16.80	41.2	15.29	42.0	15.37	43.4	15.30	44.8	15.46
	50	27.9	14.88	34.1	19.26	36.1	17.72	36.7	16.55	37.5	16.41	38.7	16.35	40.3	16.16
	52	18.9	9.83	25.5	12.23	31.5	13.77	34.7	14.45	34.9	13.98	35.7	13.79	37.7	14.16

GMV X DC Inverter VRF Units

TC—Total capacity of outdoor unit; PI—Power input of outdoor unit															
Connection ratio	Outdoor air temp. (℃ DB)	Indoor air temp.													
		14.0℃ WB		17.0℃ WB		18.0℃ WB		19.0℃ WB		20.0℃ WB		22.0℃ WB		24.0℃ WB	
		20.0℃ DB		24.0℃ DB		26.0℃ DB		27.0℃ DB		28.0℃ DB		30.0℃ DB		32.0℃ DB	
		TC	PI	TC	PI	TC	PI	TC	PI	TC	PI	TC	PI	TC	PI
		kW	kW	kW	kW	kW	kW	kW	kW	kW	kW	kW	kW	kW	kW
110%	-5	33.7	3.95	40.1	5.08	46.6	6.10	49.8	6.13	53.1	6.16	57.2	6.22	58.4	6.28
	0	33.7	3.95	40.1	5.09	46.6	6.11	49.8	6.14	53.1	6.17	57.2	6.23	58.4	6.29
	4	33.7	3.97	40.1	5.11	46.6	6.13	49.8	6.16	53.1	6.20	57.2	6.26	58.4	6.31
	7	33.7	4.04	40.1	5.20	46.6	6.25	49.8	6.28	53.1	6.31	57.2	6.37	58.4	6.43
	10	33.7	4.33	40.1	5.27	46.6	6.27	49.8	6.77	53.1	7.29	57.1	7.73	58.4	7.47
	12	33.7	4.42	40.1	5.38	46.6	6.39	49.8	6.91	53.1	7.43	56.5	7.70	57.6	7.43
	14	33.7	4.49	40.1	5.47	46.6	6.51	49.8	7.03	53.1	7.57	55.7	7.70	57.0	7.41
	16	33.7	4.57	40.1	5.58	46.6	6.63	49.8	7.17	53.1	7.72	55.0	7.75	56.2	7.82
	18	33.7	4.66	40.1	5.69	46.6	6.77	49.8	7.37	53.1	8.08	54.2	8.15	55.5	8.22
	20	33.7	4.75	40.1	5.81	46.6	7.17	49.8	7.92	52.3	8.48	53.6	8.54	54.7	8.62
	21	33.7	4.80	40.1	5.98	46.6	7.43	49.8	8.21	51.9	8.68	53.1	8.74	54.4	8.82
	23	33.7	5.03	40.1	6.40	46.6	7.96	49.8	8.80	51.1	9.06	52.4	9.15	53.6	9.23
	25	33.7	5.35	40.1	6.85	46.6	8.51	49.8	9.43	50.5	9.46	51.6	9.55	52.9	9.63
	27	33.7	5.72	40.1	7.32	46.6	9.11	49.0	9.83	49.7	9.86	51.0	9.95	52.1	10.04
	29	33.7	6.10	40.1	7.81	46.6	9.74	48.4	10.22	49.0	10.27	50.2	10.36	51.5	10.45
	31	33.7	6.50	40.1	8.33	46.6	10.39	47.6	10.62	48.2	10.67	49.5	10.76	50.7	10.87
	33	33.7	6.91	40.1	8.88	46.3	10.96	46.9	11.02	47.6	11.06	48.7	11.17	50.0	11.28
	35	33.7	7.35	40.1	9.46	45.6	11.36	46.1	11.42	46.8	11.48	47.9	11.58	49.2	11.69
	37	33.7	7.82	40.1	10.07	44.8	11.77	45.5	11.81	46.0	11.87	47.3	12.00	48.4	12.10
	39	33.7	8.31	40.1	10.73	44.0	12.17	44.7	12.23	45.3	12.29	46.4	12.41	47.7	12.53
	41	31.8	9.26	38.1	11.92	43.4	14.31	43.8	13.24	44.5	13.31	45.6	13.44	46.9	13.56
	43	30.1	9.66	36.2	12.43	42.7	15.08	43.0	14.08	43.7	13.82	44.8	13.78	46.0	13.90
	44	29.6	10.07	36.1	12.96	41.3	15.90	42.0	14.96	42.7	14.35	43.9	14.13	45.3	14.26
	47	27.9	13.40	34.9	17.25	39.9	16.69	40.5	15.18	41.2	15.27	42.4	15.18	43.8	15.32
	50	25.6	13.16	31.3	16.93	35.6	17.60	36.1	16.44	36.7	16.30	37.8	16.22	39.4	16.02
	52	18.6	9.76	25.0	12.15	31.0	13.68	34.1	14.36	34.3	13.89	35.1	13.70	37.1	14.06
100%	-5	30.6	3.45	36.4	4.42	42.4	5.51	45.0	6.09	48.2	6.12	54.2	6.18	57.3	6.23
	0	30.6	3.46	36.4	4.43	42.4	5.52	45.0	6.10	48.2	6.13	54.2	6.19	57.3	6.24
	4	30.6	3.47	36.4	4.44	42.4	5.54	45.0	6.12	48.2	6.15	54.2	6.21	57.3	6.27
	7	30.6	3.54	36.4	4.53	42.4	5.64	45.0	6.24	48.2	6.27	54.2	6.32	57.3	6.38
	10	30.6	3.91	36.4	4.75	42.4	5.62	45.0	6.07	48.2	6.56	54.2	7.42	57.3	7.71
	12	30.6	3.96	36.4	4.82	42.4	5.70	45.0	6.15	48.2	6.68	54.2	7.55	56.5	7.65
	14	30.6	4.03	36.4	4.90	42.4	5.79	45.0	6.26	48.2	6.80	54.2	7.68	55.8	7.59
	16	30.6	4.12	36.4	5.01	42.4	5.92	45.0	6.40	48.2	6.96	54.0	7.85	55.0	7.76
	18	30.6	4.22	36.4	5.12	42.4	6.04	45.0	6.53	48.2	7.09	53.2	8.00	54.4	8.12
	20	30.6	4.28	36.4	5.20	42.4	6.24	45.0	6.87	48.2	7.55	52.4	8.42	53.6	8.55
	21	30.6	4.32	36.4	5.25	42.4	6.45	45.0	7.11	48.2	7.80	52.1	8.71	53.2	8.79
	23	30.6	4.43	36.4	5.61	42.4	6.94	45.0	7.64	48.2	8.39	51.5	9.22	52.4	9.30
	25	30.6	4.72	36.4	5.97	42.4	7.38	45.0	8.13	48.2	8.97	50.7	9.55	51.8	9.64
	27	30.6	5.04	36.4	6.38	42.4	7.92	45.0	8.72	48.2	9.63	49.8	9.89	51.0	9.98
	29	30.6	5.34	36.4	6.81	42.4	8.47	45.0	9.33	48.1	10.20	49.2	10.37	50.3	10.46
	31	30.6	5.68	36.4	7.26	42.4	9.03	45.0	10.05	47.5	10.61	48.0	10.79	49.5	10.88
	33	30.6	6.04	36.4	7.73	42.4	9.63	45.0	10.64	46.6	11.00	47.8	11.10	48.8	11.20
	35	30.6	6.43	36.4	8.23	42.4	10.26	45.0	11.34	45.8	11.40	46.9	11.50	48.0	11.60
	37	30.6	6.85	36.4	8.77	42.4	10.93	44.5	11.75	45.2	11.81	46.2	11.89	47.4	12.00
	39	30.6	7.29	36.4	9.34	42.4	11.64	43.9	12.14	44.1	12.20	45.6	12.28	46.2	12.39
	41	28.9	8.10	34.6	10.37	40.3	12.93	43.1	13.15	43.6	13.22	44.6	13.34	45.8	13.46
	43	27.3	8.44	32.9	10.82	39.3	13.63	42.3	13.98	43.0	13.72	43.7	13.68	45.3	13.80
	44	26.9	8.81	32.8	11.28	38.4	14.37	41.2	14.86	41.8	14.25	43.0	14.03	44.2	14.16
	47	25.4	11.72	31.7	15.00	37.1	15.09	39.8	15.08	40.3	15.16	41.5	15.06	42.7	15.20
	50	23.2	11.51	28.4	14.73	33.1	15.91	35.5	16.33	36.0	16.18	37.1	16.10	38.4	15.90
	52	18.3	8.89	24.6	11.06	30.4	12.45	33.5	13.07	33.7	12.64	34.5	12.47	36.4	12.80

TC—Total capacity of outdoor unit; PI—Power input of outdoor unit															
Connection ratio	Outdoor air temp. (℃ DB)	Indoor air temp.													
		14.0℃ WB		17.0℃ WB		18.0℃ WB		19.0℃ WB		20.0℃ WB		22.0℃ WB		24.0℃ WB	
		20.0℃ DB		24.0℃ DB		26.0℃ DB		27.0℃ DB		28.0℃ DB		30.0℃ DB		32.0℃ DB	
		TC	PI	TC	PI	TC	PI	TC	PI	TC	PI	TC	PI	TC	PI
		kW	kW	kW	kW	kW	kW	kW	kW	kW	kW	kW	kW	kW	kW
90%	-5	27.5	3.01	32.8	3.81	38.2	4.71	40.8	5.20	43.4	5.72	48.7	6.12	54.1	6.18
	0	27.5	3.02	32.8	3.82	38.2	4.72	40.8	5.21	43.4	5.73	48.7	6.13	54.1	6.19
	4	27.5	3.03	32.8	3.83	38.2	4.73	40.8	5.23	43.4	5.75	48.7	6.16	54.1	6.21
	7	27.5	3.08	32.8	3.90	38.2	4.82	40.8	5.33	43.4	5.86	48.7	6.27	54.1	6.33
	10	27.5	3.41	32.8	4.10	38.2	4.80	40.8	5.41	43.4	5.76	48.8	6.60	54.0	7.48
	12	27.5	3.46	32.8	4.15	38.2	4.86	40.8	5.48	43.4	5.87	48.8	6.71	54.0	7.57
	14	27.5	3.52	32.8	4.23	38.2	4.95	40.8	5.56	43.4	5.97	48.8	6.83	54.0	7.70
	16	27.5	3.60	32.8	4.32	38.2	5.06	40.8	5.69	43.4	6.11	48.8	6.98	53.9	7.85
	18	27.5	3.68	32.8	4.42	38.2	5.16	40.8	5.80	43.4	6.22	48.8	7.15	53.4	8.13
	20	27.5	3.73	32.8	4.49	38.2	5.33	40.8	5.92	43.4	6.48	48.8	7.68	52.4	8.47
	21	27.5	3.77	32.8	4.53	38.2	5.51	40.8	6.11	43.4	6.70	48.8	7.94	52.1	8.66
	23	27.5	3.87	32.8	4.84	38.2	5.92	40.8	6.58	43.4	7.18	48.8	8.53	51.3	9.11
	25	27.5	4.12	32.8	5.15	38.2	6.30	40.8	7.02	43.4	7.68	48.8	9.12	50.7	9.48
	27	27.5	4.40	32.8	5.50	38.2	6.76	40.8	7.49	43.4	8.22	48.8	9.73	49.8	9.89
	29	27.5	4.66	32.8	5.88	38.2	7.23	40.8	8.00	43.4	8.77	48.2	10.20	49.2	10.29
	31	27.5	4.96	32.8	6.26	38.2	7.71	40.8	8.54	43.4	9.36	47.4	10.57	48.4	10.71
	33	27.5	5.27	32.8	6.67	38.2	8.22	40.8	9.08	43.4	9.96	46.8	11.00	47.7	11.10
	35	27.5	5.61	32.8	7.10	38.2	8.76	40.8	9.68	43.4	10.65	46.0	11.40	46.9	11.50
	37	27.5	5.97	32.8	7.56	38.2	9.33	40.1	10.03	43.4	11.40	45.2	11.81	46.3	11.78
	39	27.5	6.36	32.8	8.05	38.2	9.94	39.5	10.36	43.4	12.08	44.5	12.25	45.5	12.21
	41	26.0	7.07	31.1	8.94	36.3	11.04	38.8	11.23	41.3	12.36	43.8	13.22	44.7	13.34
	43	24.6	7.37	29.6	9.32	35.3	11.64	38.0	11.94	40.5	12.83	43.0	13.56	44.0	13.71
	44	24.2	7.68	29.5	9.73	34.5	12.27	37.1	12.69	39.6	13.32	42.1	13.91	43.2	14.03
	47	22.8	10.22	28.5	12.94	33.4	12.88	35.8	12.88	38.2	14.17	40.7	14.93	41.8	15.07
	50	20.9	10.04	25.6	12.71	29.8	13.58	31.9	13.95	34.1	15.13	36.3	15.96	37.5	15.76
	52	16.5	8.29	22.1	10.31	27.4	11.61	30.1	12.19	30.3	11.79	31.4	11.63	32.8	11.94
80%	-5	24.5	2.60	29.1	3.21	33.9	3.99	36.3	4.39	38.5	4.80	43.4	5.70	48.1	6.10
	0	24.5	2.61	29.1	3.21	33.9	4.00	36.3	4.40	38.5	4.81	43.4	5.71	48.1	6.11
	4	24.5	2.62	29.1	3.23	33.9	4.01	36.3	4.42	38.5	4.83	43.4	5.73	48.1	6.14
	7	24.5	2.66	29.1	3.29	33.9	4.09	36.3	4.50	38.5	4.92	43.4	5.83	48.1	6.25
	10	24.5	3.10	29.1	3.71	33.9	4.37	36.3	4.71	38.6	5.04	43.4	5.76	48.1	6.69
	12	24.5	3.15	29.1	3.77	33.9	4.45	36.3	4.80	38.6	5.14	43.4	5.86	48.1	6.63
	14	24.5	3.21	29.1	3.85	33.9	4.52	36.3	4.88	38.6	5.23	43.4	5.96	48.1	6.78
	16	24.5	3.26	29.1	3.91	33.9	4.62	36.3	4.97	38.6	5.31	43.4	6.09	48.1	7.03
	18	24.5	3.32	29.1	3.99	33.9	4.72	36.3	5.07	38.6	5.41	43.4	6.23	48.1	7.52
	20	24.5	3.38	29.1	4.07	33.9	4.80	36.3	5.17	38.6	5.54	43.4	6.46	48.1	7.79
	21	24.5	3.41	29.1	4.10	33.9	4.84	36.3	5.23	38.6	5.66	43.4	6.69	48.1	8.34
	23	24.5	3.47	29.1	4.19	33.9	5.07	36.3	5.56	38.6	6.05	43.4	7.16	48.1	8.92
	25	24.5	3.58	29.1	4.45	33.9	5.43	36.3	5.95	38.6	6.46	43.4	7.66	48.1	9.52
	27	24.5	3.81	29.1	4.74	33.9	5.78	36.3	6.34	38.6	6.93	43.4	8.18	48.1	9.86
	29	24.5	4.05	29.1	5.04	33.9	6.16	36.3	6.76	38.5	7.39	43.4	8.73	48.1	10.21
	31	24.5	4.29	29.1	5.36	33.9	6.56	36.3	7.20	38.5	7.88	43.4	9.31	47.3	10.58
	33	24.5	4.57	29.1	5.98	33.9	6.98	36.3	7.67	38.5	8.39	43.4	9.94	46.6	10.97
	35	24.5	4.84	29.1	5.98	33.9	7.43	36.3	8.18	38.5	8.94	43.4	10.61	45.8	11.36
	37	24.5	5.14	29.1	6.43	33.9	7.90	35.6	8.71	38.5	9.52	43.4	11.30	45.2	11.79
	39	24.5	5.44	29.1	6.83	33.9	8.41	35.1	9.27	38.5	10.14	43.4	12.03	44.3	12.22
	41	23.1	6.10	27.7	7.53	32.2	9.36	34.5	9.48	36.6	10.37	41.3	12.30	43.6	13.18
	43	21.9	6.36	26.9	7.86	31.4	9.86	33.8	10.08	35.8	10.76	40.5	12.62	43.0	13.52
	44	21.5	6.64	26.2	8.19	30.7	10.40	33.0	10.71	35.1	11.17	39.7	12.94	42.1	13.87
	47	20.3	8.83	25.3	10.89	29.7	10.92	31.8	10.87	33.8	11.89	38.4	13.90	40.8	14.89
	50	18.6	8.67	22.7	10.70	26.5	11.51	28.4	11.77	30.2	12.69	34.3	14.85	36.6	15.57
	52	14.6	6.99	19.7	8.70	24.3	9.79	26.8	10.28	26.9	9.94	27.6	9.81	29.1	10.07

GMV X DC Inverter VRF Units

TC—Total capacity of outdoor unit; PI—Power input of outdoor unit															
Connection ratio	Outdoor air temp. (℃ DB)	Indoor air temp.													
		14.0℃ WB		17.0℃ WB		18.0℃ WB		19.0℃ WB		20.0℃ WB		22.0℃ WB		24.0℃ WB	
		20.0℃ DB		24.0℃ DB		26.0℃ DB		27.0℃ DB		28.0℃ DB		30.0℃ DB		32.0℃ DB	
		TC	PI	TC	PI	TC	PI	TC	PI	TC	PI	TC	PI	TC	PI
		kW	kW	kW	kW	kW	kW	kW	kW	kW	kW	kW	kW	kW	kW
70%	-5	21.4	2.22	25.5	2.74	29.7	3.32	31.7	3.64	33.8	3.97	37.9	4.68	42.1	5.44
	0	21.4	2.22	25.5	2.75	29.7	3.33	31.7	3.65	33.8	3.98	37.9	4.69	42.1	5.45
	4	21.4	2.23	25.5	2.76	29.7	3.34	31.7	3.66	33.8	3.99	37.9	4.70	42.1	5.47
	7	21.4	2.27	25.5	2.81	29.7	3.40	31.7	3.73	33.8	4.07	37.9	4.79	42.1	5.57
	10	21.4	2.74	25.5	3.24	29.7	3.77	31.7	4.07	33.8	4.36	37.9	4.95	42.1	5.56
	12	21.4	2.77	25.5	3.29	29.7	3.85	31.7	4.14	33.8	4.43	37.9	5.04	42.1	5.67
	14	21.4	2.81	25.5	3.35	29.7	3.91	31.7	4.20	33.8	4.51	37.9	5.14	42.1	5.78
	16	21.4	2.86	25.5	3.41	29.7	3.99	31.7	4.29	33.8	4.60	37.9	5.23	42.1	5.88
	18	21.4	2.90	25.5	3.47	29.7	4.07	31.7	4.37	33.8	4.68	37.9	5.33	42.1	6.01
	20	21.4	2.95	25.5	3.53	29.7	4.14	31.7	4.45	33.8	4.77	37.9	5.44	42.1	6.17
	21	21.4	2.98	25.5	3.56	29.7	4.17	31.7	4.49	33.8	4.81	37.9	5.50	42.1	6.39
	23	21.4	3.03	25.5	3.62	29.7	4.26	31.7	4.65	33.8	5.06	37.9	5.91	42.1	6.85
	25	21.4	3.09	25.5	3.77	29.7	4.54	31.7	4.97	33.8	5.39	37.9	6.33	42.1	7.32
	27	21.4	3.27	25.5	4.02	29.7	4.84	31.7	5.29	33.8	5.76	37.9	6.76	42.1	7.82
	29	21.4	3.47	25.5	4.26	29.7	5.15	31.7	5.64	33.8	6.13	37.9	7.20	42.1	8.36
	31	21.4	3.67	25.5	4.52	29.7	5.49	31.7	5.99	33.8	6.53	37.9	7.67	42.1	8.91
	33	21.4	3.90	25.5	4.81	29.7	5.84	31.7	6.37	33.8	6.95	37.9	8.18	42.1	9.51
	35	21.4	4.13	25.5	5.10	29.7	6.19	31.7	6.79	33.8	7.40	37.9	8.71	42.1	10.13
	37	21.4	4.36	25.5	5.41	29.7	6.59	31.2	7.21	33.8	7.87	37.9	9.28	42.1	10.79
	39	21.4	4.62	25.5	5.73	29.7	6.98	30.7	7.66	33.8	8.36	37.9	9.86	42.1	11.49
	41	20.2	5.20	24.2	6.43	28.2	7.80	30.1	7.87	32.1	8.58	36.1	10.11	40.1	11.75
	43	19.1	5.42	23.5	6.71	27.2	8.22	29.6	8.37	30.5	8.90	35.4	10.36	39.0	12.05
	44	18.8	5.65	22.9	6.99	26.9	8.67	28.9	8.89	30.8	9.25	34.8	10.63	38.7	12.36
	47	17.8	7.52	22.2	9.31	26.0	9.10	27.8	9.02	29.7	9.84	33.6	11.41	37.4	13.27
	50	16.3	7.39	19.9	9.14	23.2	9.59	24.8	9.77	26.5	10.50	30.0	12.20	33.7	13.88
	52	12.8	5.80	17.2	7.22	21.3	8.06	23.4	8.53	23.6	8.25	24.1	8.14	25.5	8.36
60%	-5	18.4	1.86	21.8	2.27	25.4	2.72	27.2	2.97	29.0	3.23	32.5	3.77	36.1	4.35
	0	18.4	1.87	21.8	2.28	25.4	2.73	27.2	2.98	29.0	3.23	32.5	3.77	36.1	4.36
	4	18.4	1.87	21.8	2.29	25.4	2.74	27.2	2.99	29.0	3.24	32.5	3.79	36.1	4.37
	7	18.4	1.91	21.8	2.33	25.4	2.79	27.2	3.04	29.0	3.30	32.5	3.86	36.1	4.46
	10	18.4	2.37	21.8	2.78	25.4	3.22	27.2	3.45	28.9	3.68	32.5	4.17	36.1	4.68
	12	18.4	2.41	21.8	2.83	25.4	3.29	27.2	3.52	28.9	3.74	32.5	4.25	36.1	4.75
	14	18.4	2.45	21.8	2.87	25.4	3.33	27.2	3.58	28.9	3.82	32.5	4.33	36.1	4.84
	16	18.4	2.48	21.8	2.92	25.4	3.39	27.2	3.64	28.9	3.88	32.5	4.40	36.1	4.94
	18	18.4	2.52	21.8	2.96	25.4	3.45	27.2	3.70	28.9	3.96	32.5	4.48	36.1	5.03
	20	18.4	2.55	21.8	3.03	25.4	3.52	27.2	3.77	28.9	4.03	32.5	4.57	36.1	5.14
	21	18.4	2.58	21.8	3.04	25.4	3.55	27.2	3.81	28.9	4.07	32.5	4.62	36.1	5.18
	23	18.4	2.61	21.8	3.10	25.4	3.61	27.2	3.88	28.9	4.14	32.5	4.80	36.1	5.52
	25	18.4	2.66	21.8	3.16	25.4	3.74	27.2	4.07	28.9	4.40	32.5	5.12	36.1	5.88
	27	18.4	2.77	21.8	3.35	25.4	3.99	27.2	4.34	28.9	4.69	32.5	5.46	36.1	6.28
	29	18.4	2.92	21.8	3.55	25.4	4.25	27.2	4.62	28.9	5.00	32.5	5.82	36.1	6.71
	31	18.4	3.10	21.8	3.77	25.4	4.51	27.2	4.91	28.9	5.32	32.5	6.19	36.1	7.14
	33	18.4	3.27	21.8	3.99	25.4	4.78	27.2	5.21	28.9	5.65	32.5	6.59	36.1	7.61
	35	18.4	3.47	21.8	4.23	25.4	5.07	27.2	5.53	28.9	6.01	32.5	7.01	36.1	8.10
	37	18.4	3.67	21.8	4.48	25.4	5.38	26.7	5.87	28.9	6.37	32.5	7.46	36.1	8.62
	39	18.4	3.87	21.8	4.74	25.4	5.70	26.3	6.22	28.9	6.77	32.5	7.92	36.1	9.17
	41	17.3	4.37	20.8	5.33	24.2	6.39	25.8	6.42	27.5	6.97	31.0	8.14	34.4	9.40
	43	16.4	4.56	19.7	5.56	23.5	6.74	25.4	6.82	26.7	7.23	30.6	8.34	33.7	9.64
	44	16.1	4.75	19.7	5.80	23.0	7.10	24.7	7.25	26.4	7.51	29.8	8.56	33.2	9.88
	47	15.2	6.32	19.0	7.72	22.3	7.46	23.9	7.36	25.5	7.99	28.8	9.19	32.1	10.61
	50	13.9	6.21	17.0	7.58	19.9	7.86	21.3	7.97	22.7	8.53	25.7	9.82	28.9	11.10
	52	11.0	4.73	14.8	5.89	18.3	6.63	20.1	6.96	20.2	6.73	20.7	6.64	21.8	6.82

TC—Total capacity of outdoor unit; PI—Power input of outdoor unit															
Connection ratio	Outdoor air temp. (℃ DB)	Indoor air temp.													
		14.0℃ WB		17.0℃ WB		18.0℃ WB		19.0℃ WB		20.0℃ WB		22.0℃ WB		24.0℃ WB	
		20.0℃ DB		24.0℃ DB		26.0℃ DB		27.0℃ DB		28.0℃ DB		30.0℃ DB		32.0℃ DB	
		TC	PI	TC	PI	TC	PI	TC	PI	TC	PI	TC	PI	TC	PI
		kW	kW	kW	kW	kW	kW	kW	kW	kW	kW	kW	kW	kW	kW
50%	-5	15.3	1.54	18.2	1.85	21.2	2.18	22.7	2.36	24.1	2.55	27.1	2.95	30.1	3.38
	0	15.3	1.55	18.2	1.85	21.2	2.19	22.7	2.37	24.1	2.56	27.1	2.96	30.1	3.39
	4	15.3	1.55	18.2	1.86	21.2	2.20	22.7	2.38	24.1	2.57	27.1	2.97	30.1	3.40
	7	15.3	1.58	18.2	1.89	21.2	2.24	22.7	2.42	24.1	2.61	27.1	3.03	30.1	3.46
	10	15.3	2.05	18.2	2.37	21.2	2.71	22.7	2.89	24.1	3.06	27.1	3.44	30.1	3.84
	12	15.3	2.06	18.2	2.40	21.2	2.75	22.7	2.92	24.1	3.12	27.1	3.50	30.1	3.90
	14	15.3	2.09	18.2	2.43	21.2	2.78	22.7	2.98	24.1	3.16	27.1	3.56	30.1	3.97
	16	15.3	2.12	18.2	2.46	21.2	2.83	22.7	3.03	24.1	3.21	27.1	3.62	30.1	4.03
	18	15.3	2.15	18.2	2.51	21.2	2.87	22.7	3.07	24.1	3.27	27.1	3.68	30.1	4.11
	20	15.3	2.19	18.2	2.54	21.2	2.92	22.7	3.13	24.1	3.33	27.1	3.76	30.1	4.19
	21	15.3	2.20	18.2	2.57	21.2	2.95	22.7	3.15	24.1	3.36	27.1	3.79	30.1	4.23
	23	15.3	2.23	18.2	2.60	21.2	3.00	22.7	3.21	24.1	3.42	27.1	3.85	30.1	4.33
	25	15.3	2.26	18.2	2.64	21.2	3.06	22.7	3.27	24.1	3.53	27.1	4.05	30.1	4.62
	27	15.3	2.31	18.2	2.75	21.2	3.22	22.7	3.48	24.1	3.74	27.1	4.31	30.1	4.92
	29	15.3	2.43	18.2	2.90	21.2	3.42	22.7	3.70	24.0	3.99	27.1	4.58	30.1	5.24
	31	15.3	2.57	18.2	3.07	21.2	3.65	22.7	3.93	24.0	4.23	27.1	4.88	30.1	5.58
	33	15.3	2.72	18.2	3.26	21.2	3.85	22.7	4.16	24.0	4.49	27.1	5.18	30.1	5.93
	35	15.3	2.87	18.2	3.44	21.2	4.07	22.7	4.40	24.0	4.75	27.1	5.50	30.1	6.30
	37	15.3	3.03	18.2	3.64	21.2	4.31	22.3	4.66	24.0	5.04	27.1	5.84	30.1	6.69
	39	15.3	3.19	18.2	3.84	21.2	4.55	21.9	4.94	24.0	5.35	27.1	6.19	30.1	7.11
	41	14.5	3.62	17.3	4.33	20.1	5.12	21.5	5.11	22.9	5.51	25.8	6.38	28.7	7.30
	43	13.7	3.78	16.4	4.55	19.6	5.40	21.1	5.47	22.5	5.73	25.1	6.55	28.0	7.49
	44	13.5	3.94	16.4	4.71	19.2	5.69	20.6	5.77	21.9	5.94	24.8	6.71	27.7	7.68
	47	12.7	5.24	15.8	6.27	18.6	5.98	19.9	5.85	21.1	6.32	24.0	7.21	26.8	8.25
	50	11.6	5.14	14.2	6.16	16.6	6.30	17.7	6.34	18.9	6.75	21.4	7.70	24.1	8.63
	52	9.1	3.76	12.3	4.69	15.2	5.27	16.7	5.54	16.8	5.35	17.2	5.28	18.2	5.42

GMV-504WM/B-X(P)

TC—Total capacity of outdoor unit; PI—Power input of outdoor unit															
Connection ratio	Outdoor air temp. (℃ DB)	Indoor air temp.													
		14.0℃ WB		17.0℃ WB		18.0℃ WB		19.0℃ WB		20.0℃ WB		22.0℃ WB		24.0℃ WB	
		20.0℃ DB		24.0℃ DB		26.0℃ DB		27.0℃ DB		28.0℃ DB		30.0℃ DB		32.0℃ DB	
		TC	PI	TC	PI	TC	PI	TC	PI	TC	PI	TC	PI	TC	PI
		kW	kW	kW	kW	kW	kW	kW	kW	kW	kW	kW	kW	kW	kW
135%	-5	44.6	5.71	53.1	6.96	61.6	7.04	64.0	7.08	65.1	7.12	66.8	7.20	68.5	7.27
	0	44.6	5.72	53.1	6.97	61.6	7.05	64.0	7.09	65.1	7.13	66.8	7.21	68.5	7.29
	4	44.6	5.75	53.1	7.00	61.6	7.08	64.0	7.12	65.1	7.16	66.8	7.24	68.5	7.32
	7	44.6	5.85	53.1	7.13	61.6	7.21	64.0	7.25	65.1	7.29	66.8	7.37	68.5	7.45
	10	44.6	5.96	53.1	7.28	61.6	8.65	64.0	8.85	64.7	8.67	66.3	8.31	68.0	7.92
	12	44.6	6.06	53.1	7.42	61.6	8.83	63.1	8.79	64.0	8.62	65.4	8.24	67.1	8.11
	14	44.6	6.18	53.1	7.56	61.4	8.93	62.4	8.76	63.1	8.57	64.7	8.50	66.3	8.58
	16	44.6	6.29	53.1	7.71	60.7	8.90	61.4	8.83	62.2	8.86	63.8	8.95	65.4	9.04
	18	44.6	6.41	53.1	7.87	59.8	9.23	60.5	9.28	61.4	9.33	63.1	9.42	64.7	9.51
	20	44.6	6.55	53.1	8.38	58.9	9.68	59.8	9.73	60.5	9.79	62.2	9.87	63.8	9.98
	21	44.6	6.72	53.1	8.67	58.5	9.91	59.5	9.96	60.2	10.01	61.8	10.12	63.4	10.20
	23	44.6	7.21	53.1	9.30	57.8	10.36	58.5	10.41	59.3	10.46	60.9	10.57	62.5	10.67
	25	44.6	7.70	53.1	9.96	56.9	10.81	57.8	10.87	58.5	10.93	60.2	11.04	61.8	11.14
	27	44.6	8.22	53.1	10.66	56.2	9.52	56.9	11.34	57.6	11.39	59.3	11.51	60.9	11.63
	29	44.6	8.78	53.1	11.39	55.3	11.72	56.0	11.79	56.9	11.86	58.5	11.98	60.2	12.10
	31	44.6	9.37	52.9	12.05	54.4	12.19	55.3	12.26	56.0	12.31	57.6	12.45	59.3	12.59
	33	44.6	9.98	52.0	12.50	53.7	12.62	54.4	12.71	55.3	12.78	56.9	12.92	58.4	13.08
	35	44.6	10.64	51.1	12.95	52.7	13.11	53.7	13.18	54.4	13.25	56.0	13.41	57.6	13.55
	37	44.6	11.32	50.4	13.42	52.0	13.58	52.7	13.65	53.7	13.74	55.1	13.90	56.7	14.05
	39	44.6	12.05	49.5	13.88	51.1	14.03	52.0	14.12	52.7	14.21	54.4	14.37	56.0	14.54
	41	42.1	13.41	48.6	16.32	50.1	16.52	51.0	15.29	51.7	15.37	53.3	15.55	54.9	15.71
	43	39.8	13.98	47.7	17.01	49.1	17.41	50.0	16.25	50.7	15.96	52.3	15.94	53.9	16.11
	44	39.2	14.58	46.0	17.75	47.7	18.36	48.8	17.27	49.6	16.56	51.3	16.36	53.0	16.53
	47	37.0	19.39	44.5	23.62	46.2	19.27	47.1	17.53	47.9	17.62	49.6	17.56	51.3	17.75
	50	33.9	19.04	39.9	23.19	41.2	20.32	42.0	18.98	42.7	18.82	44.2	18.77	46.1	18.56
	52	21.7	11.27	29.1	14.03	36.0	15.79	39.7	16.58	39.9	16.03	40.8	15.82	43.1	16.24
120%	-5	41.1	5.09	48.9	6.58	56.9	6.99	60.9	7.03	64.1	7.07	65.5	7.14	67.0	7.22
	0	41.1	5.10	48.9	6.59	56.9	7.01	60.9	7.04	64.1	7.08	65.5	7.16	67.0	7.23
	4	41.1	5.12	48.9	6.62	56.9	7.03	60.9	7.07	64.1	7.11	65.5	7.18	67.0	7.26
	7	41.1	5.21	48.9	6.74	56.9	7.16	60.9	7.20	64.1	7.24	65.5	7.32	67.0	7.39
	10	41.1	5.43	48.9	6.63	56.9	7.89	60.9	8.53	63.8	8.90	65.3	8.55	66.7	8.22
	12	41.1	5.54	48.9	6.76	56.9	8.04	60.9	8.69	62.9	8.85	64.3	8.51	65.8	8.17
	14	41.1	5.64	48.9	6.90	56.9	8.20	60.9	8.86	62.0	8.79	63.6	8.46	65.1	8.51
	16	41.1	5.75	48.9	7.03	56.9	8.36	60.5	8.93	61.3	8.81	62.7	8.90	64.2	8.97
	18	41.1	5.85	48.9	7.17	56.9	8.65	59.6	9.23	60.4	9.26	61.8	9.35	63.4	9.44
	20	41.1	5.97	48.9	7.45	56.9	9.30	58.9	9.68	59.6	9.72	61.1	9.80	62.5	9.89
	21	41.1	6.02	48.9	7.71	56.9	9.63	58.4	9.91	59.1	9.94	60.7	10.03	62.2	10.13
	23	41.1	6.44	48.9	8.27	56.9	10.31	57.6	10.34	58.4	10.40	59.8	10.50	61.3	10.59
	25	41.1	6.88	48.9	8.85	56.0	10.76	56.7	10.80	57.5	10.85	59.1	10.95	60.5	11.06
	27	41.1	7.35	48.9	9.45	55.3	11.20	56.0	11.27	56.7	11.32	58.2	11.42	59.6	11.53
	29	41.1	7.84	48.9	10.10	54.4	11.65	55.1	11.72	55.8	11.77	57.3	11.89	58.9	12.00
	31	41.1	8.36	48.9	10.78	53.7	12.12	54.4	12.17	55.1	12.24	56.6	12.36	58.0	12.48
	33	41.1	8.90	48.9	11.51	52.7	12.57	53.5	12.64	54.2	12.69	55.6	12.83	57.1	12.95
	35	41.1	9.47	48.9	12.26	51.8	13.02	52.6	13.09	53.5	13.16	54.9	13.30	56.4	13.44
	37	41.1	10.08	48.9	13.06	51.1	13.49	51.8	13.56	52.6	13.63	54.0	13.77	55.5	13.93
	39	41.1	10.73	48.8	13.79	50.2	13.95	50.9	14.03	51.7	14.10	53.3	14.26	54.7	14.40
	41	38.9	11.94	46.5	15.45	49.3	16.41	50.0	15.19	50.9	15.27	52.3	15.43	53.7	15.59
	43	36.7	12.44	44.3	16.10	48.3	17.29	49.0	16.14	50.1	15.85	51.3	15.82	52.7	16.00
	44	36.2	12.98	44.0	16.79	46.9	18.23	47.8	17.15	48.8	16.45	50.3	16.23	51.9	16.40
	47	34.2	17.27	42.6	22.35	45.4	19.15	46.2	17.42	47.1	17.51	48.6	17.43	50.2	17.61
	50	31.3	16.96	38.2	21.94	40.5	20.19	41.2	18.86	42.0	18.69	43.4	18.62	45.1	18.42
	52	21.2	11.20	28.5	13.94	35.3	15.69	38.9	16.47	39.0	15.93	40.0	15.71	42.2	16.13

TC—Total capacity of outdoor unit; PI—Power input of outdoor unit															
Connection ratio	Outdoor air temp. (℃ DB)	Indoor air temp.													
		14.0℃ WB		17.0℃ WB		18.0℃ WB		19.0℃ WB		20.0℃ WB		22.0℃ WB		24.0℃ WB	
		20.0℃ DB		24.0℃ DB		26.0℃ DB		27.0℃ DB		28.0℃ DB		30.0℃ DB		32.0℃ DB	
		TC	PI	TC	PI	TC	PI	TC	PI	TC	PI	TC	PI	TC	PI
		kW	kW	kW	kW	kW	kW	kW	kW	kW	kW	kW	kW	kW	kW
110%	-5	37.7	4.50	45.0	5.79	52.2	6.95	55.8	6.98	59.5	7.02	64.1	7.09	65.4	7.15
	0	37.7	4.51	45.0	5.80	52.2	6.96	55.8	7.00	59.5	7.04	64.1	7.10	65.4	7.17
	4	37.7	4.52	45.0	5.82	52.2	6.99	55.8	7.02	59.5	7.06	64.1	7.13	65.4	7.19
	7	37.7	4.61	45.0	5.93	52.2	7.12	55.8	7.15	59.5	7.19	64.1	7.26	65.4	7.33
	10	37.7	4.93	45.0	6.01	52.2	7.14	55.8	7.71	59.5	8.31	64.0	8.81	65.4	8.51
	12	37.7	5.03	45.0	6.13	52.2	7.28	55.8	7.87	59.5	8.46	63.3	8.78	64.5	8.46
	14	37.7	5.12	45.0	6.23	52.2	7.42	55.8	8.01	59.5	8.62	62.4	8.78	63.8	8.45
	16	37.7	5.21	45.0	6.36	52.2	7.56	55.8	8.17	59.5	8.79	61.6	8.83	62.9	8.92
	18	37.7	5.31	45.0	6.48	52.2	7.71	55.8	8.39	59.5	9.21	60.7	9.28	62.2	9.37
	20	37.7	5.42	45.0	6.62	52.2	8.17	55.8	9.02	58.5	9.66	60.0	9.73	61.3	9.82
	21	37.7	5.47	45.0	6.81	52.2	8.46	55.8	9.35	58.2	9.89	59.5	9.96	60.9	10.05
	23	37.7	5.73	45.0	7.30	52.2	9.07	55.8	10.03	57.3	10.33	58.7	10.43	60.0	10.52
	25	37.7	6.09	45.0	7.80	52.2	9.70	55.8	10.74	56.6	10.78	57.8	10.88	59.3	10.97
	27	37.7	6.51	45.0	8.34	52.2	10.38	54.9	11.20	55.6	11.23	57.1	11.34	58.4	11.44
	29	37.7	6.95	45.0	8.90	52.2	11.09	54.2	11.65	54.9	11.70	56.2	11.81	57.6	11.91
	31	37.7	7.40	45.0	9.49	52.2	11.84	53.3	12.10	54.0	12.15	55.5	12.26	56.7	12.38
	33	37.7	7.87	45.0	10.12	51.8	12.48	52.6	12.55	53.3	12.61	54.6	12.73	56.0	12.85
	35	37.7	8.38	45.0	10.78	51.1	12.94	51.7	13.01	52.4	13.08	53.7	13.20	55.1	13.32
	37	37.7	8.92	45.0	11.47	50.2	13.41	50.9	13.46	51.5	13.53	52.9	13.67	54.2	13.79
	39	37.7	9.47	45.0	12.22	49.3	13.86	50.0	13.93	50.8	14.00	52.0	14.14	53.5	14.28
	41	35.6	10.55	42.7	13.58	48.6	16.30	49.1	15.09	49.8	15.17	51.1	15.31	52.5	15.45
	43	33.7	11.00	40.6	14.16	47.8	17.18	48.2	16.04	48.9	15.75	50.2	15.70	51.6	15.84
	44	33.2	11.47	40.5	14.77	46.3	18.11	47.0	17.04	47.8	16.35	49.1	16.10	50.7	16.25
	47	31.3	15.27	39.1	19.65	44.7	19.02	45.4	17.30	46.1	17.39	47.5	17.29	49.0	17.45
	50	28.7	14.99	35.1	19.29	39.9	20.05	40.4	18.73	41.1	18.57	42.4	18.48	44.1	18.25
	52	20.8	11.12	28.0	13.85	34.7	15.58	38.2	16.36	38.4	15.82	39.3	15.61	41.5	16.02
100%	-5	34.3	3.93	40.8	5.04	47.5	6.28	50.4	6.94	54.0	6.97	60.7	7.04	64.1	7.10
	0	34.3	3.94	40.8	5.05	47.5	6.29	50.4	6.95	54.0	6.99	60.7	7.05	64.1	7.11
	4	34.3	3.95	40.8	5.06	47.5	6.31	50.4	6.98	54.0	7.01	60.7	7.07	64.1	7.14
	7	34.3	4.03	40.8	5.16	47.5	6.43	50.4	7.11	54.0	7.14	60.7	7.21	64.1	7.27
	10	34.3	4.46	40.8	5.42	47.5	6.41	50.4	6.92	54.0	7.47	60.7	8.45	64.2	8.78
	12	34.3	4.52	40.8	5.49	47.5	6.49	50.4	7.01	54.0	7.61	60.7	8.60	63.2	8.71
	14	34.3	4.59	40.8	5.58	47.5	6.60	50.4	7.14	54.0	7.75	60.7	8.75	62.5	8.65
	16	34.3	4.70	40.8	5.71	47.5	6.75	50.4	7.30	54.0	7.93	60.5	8.94	61.6	8.84
	18	34.3	4.80	40.8	5.84	47.5	6.88	50.4	7.44	54.0	8.08	59.6	9.12	60.9	9.26
	20	34.3	4.88	40.8	5.92	47.5	7.11	50.4	7.83	54.0	8.60	58.7	9.60	60.0	9.74
	21	34.3	4.93	40.8	5.98	47.5	7.35	50.4	8.10	54.0	8.89	58.4	9.92	59.6	10.01
	23	34.3	5.05	40.8	6.39	47.5	7.90	50.4	8.71	54.0	9.56	57.7	10.50	58.7	10.60
	25	34.3	5.37	40.8	6.80	47.5	8.41	50.4	9.26	54.0	10.22	56.7	10.88	58.0	10.98
	27	34.3	5.74	40.8	7.27	47.5	9.02	50.4	9.94	54.0	10.97	55.8	11.27	57.1	11.37
	29	34.3	6.08	40.8	7.76	47.5	9.65	50.4	10.63	53.8	11.62	55.1	11.81	56.3	11.92
	31	34.3	6.47	40.8	8.27	47.5	10.29	50.4	11.45	53.2	12.09	53.8	12.29	55.5	12.40
	33	34.3	6.88	40.8	8.81	47.5	10.97	50.4	12.12	52.2	12.53	53.5	12.64	54.7	12.76
	35	34.3	7.32	40.8	9.38	47.5	11.69	50.4	12.92	51.3	12.98	52.5	13.10	53.8	13.22
	37	34.3	7.80	40.8	9.99	47.5	12.45	49.8	13.39	50.7	13.45	51.8	13.55	53.0	13.67
	39	34.3	8.31	40.8	10.64	47.5	13.26	49.2	13.83	49.4	13.90	51.1	13.99	51.8	14.12
	41	32.4	9.23	38.7	11.82	45.1	14.73	48.2	14.99	48.8	15.06	50.0	15.20	51.3	15.33
	43	30.6	9.62	36.8	12.33	44.0	15.53	47.3	15.93	48.1	15.63	48.9	15.59	50.8	15.73
	44	30.1	10.03	36.7	12.85	43.0	16.37	46.2	16.93	46.8	16.23	48.1	15.98	49.5	16.13
	47	28.4	13.35	35.5	17.10	41.6	17.19	44.6	17.18	45.1	17.27	46.5	17.16	47.9	17.32
	50	26.0	13.11	31.8	16.79	37.1	18.12	39.7	18.60	40.3	18.44	41.5	18.34	43.0	18.11
	52	20.5	10.12	27.6	12.60	34.1	14.18	37.5	14.89	37.7	14.40	38.6	14.21	40.8	14.59

GMV X DC Inverter VRF Units

TC—Total capacity of outdoor unit; PI—Power input of outdoor unit															
Connection ratio	Outdoor air temp. (℃ DB)	Indoor air temp.													
		14.0℃ WB		17.0℃ WB		18.0℃ WB		19.0℃ WB		20.0℃ WB		22.0℃ WB		24.0℃ WB	
		20.0℃ DB		24.0℃ DB		26.0℃ DB		27.0℃ DB		28.0℃ DB		30.0℃ DB		32.0℃ DB	
		TC	PI	TC	PI	TC	PI	TC	PI	TC	PI	TC	PI	TC	PI
		kW	kW	kW	kW	kW	kW	kW	kW	kW	kW	kW	kW	kW	kW
90%	-5	30.8	3.43	36.7	4.34	42.7	5.36	45.7	5.93	48.6	6.52	54.6	6.97	60.5	7.04
	0	30.8	3.44	36.7	4.35	42.7	5.37	45.7	5.94	48.6	6.53	54.6	6.99	60.5	7.05
	4	30.8	3.45	36.7	4.37	42.7	5.39	45.7	5.96	48.6	6.55	54.6	7.01	60.5	7.08
	7	30.8	3.51	36.7	4.45	42.7	5.49	45.7	6.07	48.6	6.68	54.6	7.14	60.5	7.21
	10	30.8	3.89	36.7	4.67	42.7	5.47	45.7	6.16	48.6	6.56	54.6	7.52	60.5	8.52
	12	30.8	3.94	36.7	4.73	42.7	5.54	45.7	6.24	48.6	6.69	54.6	7.65	60.5	8.63
	14	30.8	4.01	36.7	4.81	42.7	5.64	45.7	6.34	48.6	6.80	54.6	7.78	60.5	8.77
	16	30.8	4.10	36.7	4.92	42.7	5.76	45.7	6.48	48.6	6.96	54.6	7.95	60.3	8.94
	18	30.8	4.19	36.7	5.03	42.7	5.88	45.7	6.61	48.6	7.09	54.6	8.14	59.8	9.26
	20	30.8	4.25	36.7	5.11	42.7	6.07	45.7	6.74	48.6	7.39	54.6	8.74	58.7	9.65
	21	30.8	4.30	36.7	5.16	42.7	6.28	45.7	6.97	48.6	7.64	54.6	9.04	58.4	9.87
	23	30.8	4.41	36.7	5.51	42.7	6.75	45.7	7.49	48.6	8.18	54.6	9.71	57.5	10.37
	25	30.8	4.69	36.7	5.87	42.7	7.18	45.7	7.99	48.6	8.75	54.6	10.39	56.7	10.80
	27	30.8	5.01	36.7	6.27	42.7	7.71	45.7	8.53	48.6	9.37	54.6	11.09	55.8	11.27
	29	30.8	5.31	36.7	6.70	42.7	8.24	45.7	9.12	48.6	10.00	54.0	11.62	55.1	11.73
	31	30.8	5.65	36.7	7.13	42.7	8.79	45.7	9.73	48.6	10.67	53.1	12.04	54.2	12.20
	33	30.8	6.01	36.7	7.59	42.7	9.37	45.7	10.35	48.6	11.35	52.4	12.53	53.5	12.64
	35	30.8	6.39	36.7	8.09	42.7	9.99	45.7	11.03	48.6	12.14	51.5	12.99	52.6	13.10
	37	30.8	6.81	36.7	8.61	42.7	10.63	44.9	11.43	48.6	12.99	50.6	13.45	51.8	13.42
	39	30.8	7.25	36.7	9.17	42.7	11.33	44.3	11.81	48.6	13.77	49.8	13.95	50.9	13.91
	41	29.1	8.05	34.9	10.19	40.6	12.58	43.4	12.80	46.2	14.08	49.0	15.06	50.1	15.20
	43	27.5	8.39	33.1	10.62	39.5	13.27	42.6	13.60	45.3	14.62	48.2	15.45	49.3	15.61
	44	27.1	8.75	33.0	11.08	38.7	13.98	41.6	14.45	44.4	15.17	47.2	15.84	48.4	15.99
	47	25.6	11.65	31.9	14.74	37.4	14.68	40.1	14.67	42.8	16.14	45.6	17.01	46.8	17.17
	50	23.4	11.44	28.6	14.48	33.4	15.48	35.8	15.89	38.2	17.23	40.7	18.18	42.1	17.95
	52	18.4	9.44	24.8	11.75	30.7	13.22	33.8	13.88	33.9	13.43	35.2	13.25	36.7	13.60
80%	-5	27.4	2.96	32.6	3.66	38.0	4.54	40.6	5.00	43.1	5.47	48.6	6.49	53.8	6.95
	0	27.4	2.97	32.6	3.66	38.0	4.55	40.6	5.01	43.1	5.48	48.6	6.50	53.8	6.97
	4	27.4	2.98	32.6	3.68	38.0	4.57	40.6	5.03	43.1	5.50	48.6	6.53	53.8	6.99
	7	27.4	3.04	32.6	3.74	38.0	4.65	40.6	5.12	43.1	5.60	48.6	6.65	53.8	7.12
	10	27.4	3.53	32.6	4.23	38.0	4.98	40.6	5.36	43.2	5.74	48.6	6.56	53.8	7.62
	12	27.4	3.59	32.6	4.30	38.0	5.07	40.6	5.47	43.2	5.85	48.6	6.67	53.8	7.56
	14	27.4	3.66	32.6	4.39	38.0	5.15	40.6	5.55	43.2	5.96	48.6	6.79	53.8	7.73
	16	27.4	3.71	32.6	4.46	38.0	5.26	40.6	5.66	43.2	6.05	48.6	6.94	53.8	8.01
	18	27.4	3.78	32.6	4.54	38.0	5.38	40.6	5.78	43.2	6.17	48.6	7.10	53.8	8.56
	20	27.4	3.85	32.6	4.63	38.0	5.47	40.6	5.89	43.2	6.31	48.6	7.36	53.8	8.88
	21	27.4	3.88	32.6	4.67	38.0	5.52	40.6	5.96	43.2	6.45	48.6	7.62	53.8	9.50
	23	27.4	3.95	32.6	4.77	38.0	5.78	40.6	6.34	43.2	6.90	48.6	8.15	53.8	10.16
	25	27.4	4.07	32.6	5.07	38.0	6.18	40.6	6.77	43.2	7.36	48.6	8.73	53.8	10.85
	27	27.4	4.34	32.6	5.40	38.0	6.58	40.6	7.23	43.2	7.90	48.6	9.32	53.8	11.23
	29	27.4	4.61	32.6	5.75	38.0	7.02	40.6	7.70	43.1	8.42	48.6	9.94	53.8	11.64
	31	27.4	4.89	32.6	6.11	38.0	7.47	40.6	8.20	43.1	8.98	48.6	10.61	52.9	12.06
	33	27.4	5.21	32.6	6.81	38.0	7.96	40.6	8.74	43.1	9.56	48.6	11.32	52.2	12.50
	35	27.4	5.52	32.6	6.81	38.0	8.46	40.6	9.32	43.1	10.18	48.6	12.09	51.3	12.95
	37	27.4	5.85	32.6	7.33	38.0	9.00	39.9	9.92	43.1	10.84	48.6	12.87	50.6	13.43
	39	27.4	6.20	32.6	7.78	38.0	9.58	39.3	10.57	43.1	11.55	48.6	13.71	49.7	13.92
	41	25.9	6.95	31.0	8.58	36.1	10.66	38.6	10.81	41.0	11.81	46.2	14.02	48.9	15.02
	43	24.5	7.25	30.1	8.95	35.2	11.23	37.9	11.49	40.1	12.26	45.3	14.38	48.1	15.41
	44	24.1	7.56	29.4	9.33	34.4	11.85	36.9	12.20	39.3	12.73	44.5	14.74	47.2	15.80
	47	22.7	10.06	28.4	12.41	33.2	12.44	35.6	12.39	37.9	13.54	43.0	15.83	45.7	16.96
	50	20.8	9.88	25.4	12.19	29.7	13.12	31.8	13.41	33.8	14.46	38.4	16.92	41.0	17.74
	52	16.4	7.97	22.0	9.92	27.3	11.16	30.0	11.72	30.2	11.33	30.9	11.18	32.6	11.48

TC—Total capacity of outdoor unit; PI—Power input of outdoor unit															
Connection ratio	Outdoor air temp. (℃ DB)	Indoor air temp.													
		14.0℃ WB		17.0℃ WB		18.0℃ WB		19.0℃ WB		20.0℃ WB		22.0℃ WB		24.0℃ WB	
		20.0℃ DB		24.0℃ DB		26.0℃ DB		27.0℃ DB		28.0℃ DB		30.0℃ DB		32.0℃ DB	
		TC	PI	TC	PI	TC	PI	TC	PI	TC	PI	TC	PI	TC	PI
		kW	kW	kW	kW	kW	kW	kW	kW	kW	kW	kW	kW	kW	kW
70%	-5	24.0	2.52	28.5	3.12	33.2	3.79	35.5	4.15	37.9	4.53	42.4	5.33	47.1	6.20
	0	24.0	2.53	28.5	3.13	33.2	3.79	35.5	4.16	37.9	4.53	42.4	5.34	47.1	6.21
	4	24.0	2.54	28.5	3.14	33.2	3.81	35.5	4.17	37.9	4.55	42.4	5.36	47.1	6.23
	7	24.0	2.59	28.5	3.20	33.2	3.88	35.5	4.25	37.9	4.64	42.4	5.46	47.1	6.35
	10	24.0	3.12	28.5	3.69	33.2	4.30	35.5	4.63	37.8	4.96	42.5	5.64	47.1	6.34
	12	24.0	3.15	28.5	3.74	33.2	4.39	35.5	4.72	37.8	5.05	42.5	5.75	47.1	6.46
	14	24.0	3.20	28.5	3.81	33.2	4.46	35.5	4.79	37.8	5.14	42.5	5.85	47.1	6.58
	16	24.0	3.26	28.5	3.88	33.2	4.54	35.5	4.89	37.8	5.24	42.5	5.96	47.1	6.70
	18	24.0	3.31	28.5	3.95	33.2	4.63	35.5	4.98	37.8	5.33	42.5	6.08	47.1	6.84
	20	24.0	3.36	28.5	4.02	33.2	4.72	35.5	5.07	37.8	5.43	42.5	6.20	47.1	7.03
	21	24.0	3.40	28.5	4.06	33.2	4.75	35.5	5.12	37.8	5.48	42.5	6.27	47.1	7.28
	23	24.0	3.45	28.5	4.13	33.2	4.86	35.5	5.29	37.8	5.76	42.5	6.74	47.1	7.80
	25	24.0	3.52	28.5	4.30	33.2	5.17	35.5	5.66	37.8	6.15	42.5	7.21	47.1	8.34
	27	24.0	3.73	28.5	4.58	33.2	5.52	35.5	6.02	37.8	6.56	42.5	7.70	47.1	8.92
	29	24.0	3.95	28.5	4.86	33.2	5.87	35.5	6.43	37.8	6.98	42.5	8.20	47.1	9.52
	31	24.0	4.18	28.5	5.15	33.2	6.25	35.5	6.83	37.8	7.44	42.5	8.74	47.1	10.15
	33	24.0	4.44	28.5	5.48	33.2	6.65	35.5	7.26	37.8	7.92	42.5	9.32	47.1	10.83
	35	24.0	4.70	28.5	5.82	33.2	7.05	35.5	7.73	37.8	8.43	42.5	9.93	47.1	11.54
	37	24.0	4.96	28.5	6.16	33.2	7.50	34.9	8.22	37.8	8.97	42.5	10.57	47.1	12.29
	39	24.0	5.26	28.5	6.53	33.2	7.96	34.4	8.72	37.8	9.52	42.5	11.23	47.1	13.09
	41	22.7	5.92	27.1	7.33	31.6	8.89	33.8	8.97	36.0	9.78	40.5	11.51	44.9	13.39
	43	21.4	6.18	26.3	7.65	30.5	9.36	33.1	9.53	34.2	10.14	39.7	11.80	43.7	13.73
	44	21.1	6.44	25.7	7.97	30.1	9.87	32.3	10.13	34.5	10.53	38.9	12.11	43.4	14.08
	47	19.9	8.57	24.8	10.60	29.1	10.37	31.2	10.28	33.3	11.21	37.6	13.00	41.9	15.12
	50	18.2	8.42	22.3	10.41	26.0	10.93	27.8	11.13	29.7	11.97	33.6	13.90	37.7	15.82
	52	14.3	6.61	19.3	8.23	23.9	9.18	26.3	9.72	26.4	9.40	27.0	9.28	28.5	9.52
60%	-5	20.6	2.12	24.5	2.59	28.5	3.10	30.5	3.38	32.4	3.67	36.4	4.29	40.4	4.96
	0	20.6	2.13	24.5	2.59	28.5	3.11	30.5	3.39	32.4	3.68	36.4	4.30	40.4	4.96
	4	20.6	2.13	24.5	2.60	28.5	3.12	30.5	3.40	32.4	3.70	36.4	4.32	40.4	4.98
	7	20.6	2.17	24.5	2.65	28.5	3.18	30.5	3.47	32.4	3.76	36.4	4.40	40.4	5.08
	10	20.6	2.70	24.5	3.17	28.5	3.67	30.5	3.94	32.4	4.20	36.4	4.75	40.4	5.33
	12	20.6	2.75	24.5	3.22	28.5	3.74	30.5	4.00	32.4	4.27	36.4	4.84	40.4	5.42
	14	20.6	2.79	24.5	3.27	28.5	3.80	30.5	4.07	32.4	4.35	36.4	4.93	40.4	5.52
	16	20.6	2.82	24.5	3.33	28.5	3.87	30.5	4.14	32.4	4.42	36.4	5.01	40.4	5.62
	18	20.6	2.87	24.5	3.38	28.5	3.94	30.5	4.21	32.4	4.51	36.4	5.10	40.4	5.73
	20	20.6	2.91	24.5	3.45	28.5	4.00	30.5	4.30	32.4	4.60	36.4	5.21	40.4	5.85
	21	20.6	2.94	24.5	3.47	28.5	4.04	30.5	4.34	32.4	4.63	36.4	5.26	40.4	5.90
	23	20.6	2.98	24.5	3.53	28.5	4.11	30.5	4.42	32.4	4.72	36.4	5.47	40.4	6.29
	25	20.6	3.03	24.5	3.60	28.5	4.27	30.5	4.63	32.4	5.01	36.4	5.83	40.4	6.70
	27	20.6	3.15	24.5	3.81	28.5	4.54	30.5	4.95	32.4	5.35	36.4	6.22	40.4	7.16
	29	20.6	3.33	24.5	4.04	28.5	4.84	30.5	5.26	32.4	5.69	36.4	6.63	40.4	7.64
	31	20.6	3.53	24.5	4.30	28.5	5.14	30.5	5.59	32.4	6.06	36.4	7.05	40.4	8.13
	33	20.6	3.73	24.5	4.54	28.5	5.45	30.5	5.94	32.4	6.44	36.4	7.50	40.4	8.67
	35	20.6	3.95	24.5	4.82	28.5	5.78	30.5	6.30	32.4	6.84	36.4	7.99	40.4	9.23
	37	20.6	4.18	24.5	5.10	28.5	6.13	29.9	6.69	32.4	7.26	36.4	8.50	40.4	9.82
	39	20.6	4.41	24.5	5.40	28.5	6.49	29.5	7.09	32.4	7.71	36.4	9.02	40.4	10.45
	41	19.4	4.98	23.2	6.08	27.1	7.28	28.9	7.31	30.8	7.94	34.7	9.27	38.5	10.71
	43	18.4	5.19	22.1	6.33	26.3	7.68	28.4	7.77	29.9	8.24	34.3	9.50	37.7	10.98
	44	18.1	5.42	22.0	6.61	25.8	8.09	27.7	8.26	29.6	8.55	33.4	9.75	37.2	11.26
	47	17.1	7.21	21.3	8.79	24.9	8.50	26.7	8.38	28.5	9.10	32.2	10.47	36.0	12.09
	50	15.6	7.08	19.1	8.63	22.3	8.96	23.8	9.08	25.4	9.72	28.8	11.19	32.3	12.64
	52	12.3	5.39	16.5	6.71	20.4	7.55	22.5	7.93	22.6	7.67	23.2	7.56	24.5	7.77

GMV X DC Inverter VRF Units

TC—Total capacity of outdoor unit; PI—Power input of outdoor unit															
Connection ratio	Outdoor air temp. (℃ DB)	Indoor air temp.													
		14.0℃ WB		17.0℃ WB		18.0℃ WB		19.0℃ WB		20.0℃ WB		22.0℃ WB		24.0℃ WB	
		20.0℃ DB		24.0℃ DB		26.0℃ DB		27.0℃ DB		28.0℃ DB		30.0℃ DB		32.0℃ DB	
		TC	PI	TC	PI	TC	PI	TC	PI	TC	PI	TC	PI	TC	PI
		kW	kW	kW	kW	kW	kW	kW	kW	kW	kW	kW	kW	kW	kW
50%	-5	17.1	1.76	20.4	2.10	23.7	2.49	25.4	2.69	27.0	2.91	30.4	3.37	33.7	3.85
	0	17.1	1.76	20.4	2.11	23.7	2.49	25.4	2.70	27.0	2.91	30.4	3.37	33.7	3.86
	4	17.1	1.77	20.4	2.12	23.7	2.50	25.4	2.71	27.0	2.92	30.4	3.38	33.7	3.87
	7	17.1	1.80	20.4	2.15	23.7	2.55	25.4	2.76	27.0	2.98	30.4	3.45	33.7	3.95
	10	17.1	2.33	20.4	2.70	23.7	3.08	25.4	3.29	27.0	3.48	30.4	3.92	33.7	4.37
	12	17.1	2.35	20.4	2.73	23.7	3.13	25.4	3.33	27.0	3.55	30.4	3.99	33.7	4.44
	14	17.1	2.39	20.4	2.77	23.7	3.17	25.4	3.40	27.0	3.60	30.4	4.06	33.7	4.53
	16	17.1	2.42	20.4	2.80	23.7	3.22	25.4	3.45	27.0	3.66	30.4	4.13	33.7	4.60
	18	17.1	2.46	20.4	2.86	23.7	3.27	25.4	3.50	27.0	3.73	30.4	4.20	33.7	4.68
	20	17.1	2.49	20.4	2.89	23.7	3.33	25.4	3.57	27.0	3.80	30.4	4.28	33.7	4.77
	21	17.1	2.51	20.4	2.93	23.7	3.36	25.4	3.59	27.0	3.83	30.4	4.32	33.7	4.82
	23	17.1	2.54	20.4	2.96	23.7	3.41	25.4	3.66	27.0	3.90	30.4	4.39	33.7	4.93
	25	17.1	2.58	20.4	3.01	23.7	3.48	25.4	3.73	27.0	4.02	30.4	4.61	33.7	5.26
	27	17.1	2.63	20.4	3.13	23.7	3.67	25.4	3.97	27.0	4.27	30.4	4.91	33.7	5.61
	29	17.1	2.77	20.4	3.31	23.7	3.90	25.4	4.21	26.9	4.54	30.4	5.22	33.7	5.97
	31	17.1	2.93	20.4	3.50	23.7	4.16	25.4	4.47	26.9	4.82	30.4	5.55	33.7	6.36
	33	17.1	3.10	20.4	3.71	23.7	4.39	25.4	4.74	26.9	5.12	30.4	5.90	33.7	6.76
	35	17.1	3.27	20.4	3.92	23.7	4.63	25.4	5.01	26.9	5.42	30.4	6.27	33.7	7.17
	37	17.1	3.45	20.4	4.14	23.7	4.91	24.9	5.31	26.9	5.75	30.4	6.65	33.7	7.63
	39	17.1	3.64	20.4	4.37	23.7	5.19	24.6	5.62	26.9	6.09	30.4	7.05	33.7	8.10
	41	16.2	4.12	19.4	4.94	22.6	5.84	24.1	5.82	25.6	6.28	28.9	7.27	32.1	8.32
	43	15.3	4.31	18.4	5.18	21.9	6.15	23.7	6.23	25.2	6.53	28.1	7.46	31.4	8.54
	44	15.1	4.48	18.4	5.37	21.5	6.48	23.1	6.57	24.6	6.77	27.8	7.65	31.0	8.75
	47	14.2	5.97	17.7	7.14	20.8	6.81	22.3	6.67	23.7	7.20	26.9	8.21	30.0	9.40
	50	13.0	5.86	15.9	7.01	18.5	7.18	19.9	7.22	21.1	7.69	24.0	8.78	27.0	9.83
	52	10.2	4.29	13.8	5.34	17.0	6.01	18.8	6.31	18.9	6.10	19.3	6.02	20.4	6.18

GMV-560WM/B-X(P)

TC—Total capacity of outdoor unit; PI—Power input of outdoor unit															
Connection ratio	Outdoor air temp. (℃ DB)	Indoor air temp.													
		14.0℃ WB		17.0℃ WB		18.0℃ WB		19.0℃ WB		20.0℃ WB		22.0℃ WB		24.0℃ WB	
		20.0℃ DB		24.0℃ DB		26.0℃ DB		27.0℃ DB		28.0℃ DB		30.0℃ DB		32.0℃ DB	
		TC	PI	TC	PI	TC	PI	TC	PI	TC	PI	TC	PI	TC	PI
		kW	kW	kW	kW	kW	kW	kW	kW	kW	kW	kW	kW	kW	kW
135%	-5	49.5	6.41	59.0	7.80	68.5	7.90	71.1	7.94	72.4	7.98	74.2	8.07	76.1	8.16
	0	49.5	6.42	59.0	7.82	68.5	7.91	71.1	7.95	72.4	8.00	74.2	8.09	76.1	8.17
	4	49.5	6.44	59.0	7.85	68.5	7.94	71.1	7.98	72.4	8.02	74.2	8.12	76.1	8.20
	7	49.5	6.56	59.0	7.99	68.5	8.09	71.1	8.13	72.4	8.17	74.2	8.27	76.1	8.36
	10	49.5	6.68	59.0	8.16	68.5	9.71	71.1	9.92	71.9	9.73	73.7	9.32	75.5	8.89
	12	49.5	6.80	59.0	8.32	68.5	9.90	70.1	9.86	71.1	9.67	72.7	9.24	74.5	9.10
	14	49.5	6.93	59.0	8.48	68.3	10.02	69.3	9.82	70.1	9.61	71.9	9.53	73.7	9.63
	16	49.5	7.05	59.0	8.65	67.5	9.98	68.3	9.90	69.1	9.94	70.9	10.04	72.7	10.14
	18	49.5	7.19	59.0	8.83	66.5	10.35	67.3	10.41	68.3	10.47	70.1	10.56	71.9	10.66
	20	49.5	7.34	59.0	9.39	65.5	10.86	66.5	10.92	67.3	10.97	69.1	11.07	70.9	11.19
	21	49.5	7.54	59.0	9.73	65.1	11.11	66.1	11.17	66.9	11.23	68.7	11.35	70.5	11.44
	23	49.5	8.08	59.0	10.43	64.2	11.62	65.1	11.68	65.9	11.74	67.7	11.85	69.5	11.97
	25	49.5	8.63	59.0	11.17	63.2	12.13	64.2	12.19	65.1	12.26	66.9	12.38	68.7	12.50
	27	49.5	9.22	59.0	11.95	62.4	10.68	63.2	12.71	64.0	12.77	65.9	12.91	67.7	13.04
	29	49.5	9.84	59.0	12.77	61.4	13.14	62.2	13.22	63.2	13.30	65.1	13.44	66.9	13.57
	31	49.5	10.51	58.8	13.51	60.4	13.67	61.4	13.75	62.2	13.81	64.0	13.96	65.9	14.12
	33	49.5	11.19	57.8	14.02	59.6	14.16	60.4	14.26	61.4	14.33	63.2	14.49	64.9	14.67
	35	49.5	11.93	56.8	14.53	58.6	14.70	59.6	14.78	60.4	14.86	62.2	15.04	64.0	15.19
	37	49.5	12.69	56.0	15.06	57.8	15.23	58.6	15.31	59.6	15.41	61.2	15.58	63.0	15.76
	39	49.5	13.51	55.0	15.56	56.8	15.74	57.8	15.84	58.6	15.94	60.4	16.11	62.2	16.31
	41	46.8	15.03	54.0	18.31	55.7	18.53	56.7	17.15	57.5	17.24	59.2	17.44	61.0	17.62
	43	44.2	15.68	52.9	19.08	54.6	19.53	55.5	18.22	56.3	17.90	58.1	17.88	59.9	18.07
	44	43.6	16.35	51.1	19.90	53.0	20.59	54.2	19.37	55.2	18.58	57.0	18.34	58.9	18.54
	47	41.1	21.75	49.4	26.49	51.3	21.62	52.3	19.66	53.2	19.77	55.1	19.70	57.0	19.90
	50	37.7	21.36	44.3	26.01	45.8	22.79	46.7	21.29	47.4	21.10	49.2	21.05	51.2	20.81
	52	24.1	12.64	32.4	15.74	40.0	17.71	44.1	18.59	44.3	17.98	45.3	17.74	47.9	18.21
120%	-5	45.7	5.70	54.4	7.38	63.2	7.84	67.7	7.89	71.2	7.93	72.8	8.01	74.4	8.10
	0	45.7	5.72	54.4	7.40	63.2	7.86	67.7	7.90	71.2	7.94	72.8	8.03	74.4	8.11
	4	45.7	5.74	54.4	7.42	63.2	7.89	67.7	7.93	71.2	7.97	72.8	8.06	74.4	8.14
	7	45.7	5.84	54.4	7.56	63.2	8.03	67.7	8.08	71.2	8.12	72.8	8.21	74.4	8.29
	10	45.7	6.09	54.4	7.44	63.2	8.85	67.7	9.57	70.9	9.98	72.5	9.59	74.1	9.22
	12	45.7	6.21	54.4	7.58	63.2	9.02	67.7	9.74	69.9	9.92	71.5	9.55	73.1	9.16
	14	45.7	6.33	54.4	7.73	63.2	9.20	67.7	9.94	68.9	9.86	70.7	9.49	72.3	9.55
	16	45.7	6.44	54.4	7.89	63.2	9.37	67.3	10.02	68.1	9.88	69.7	9.98	71.3	10.06
	18	45.7	6.56	54.4	8.05	63.2	9.71	66.3	10.35	67.1	10.39	68.7	10.49	70.5	10.58
	20	45.7	6.70	54.4	8.36	63.2	10.43	65.5	10.86	66.3	10.90	67.9	10.99	69.5	11.09
	21	45.7	6.76	54.4	8.65	63.2	10.80	64.9	11.11	65.7	11.15	67.5	11.25	69.1	11.37
	23	45.7	7.23	54.4	9.28	63.2	11.56	64.0	11.60	64.9	11.66	66.5	11.78	68.1	11.87
	25	45.7	7.71	54.4	9.92	62.2	12.07	63.0	12.11	63.8	12.17	65.7	12.28	67.3	12.40
	27	45.7	8.24	54.4	10.60	61.4	12.56	62.2	12.63	63.0	12.69	64.6	12.81	66.3	12.93
	29	45.7	8.79	54.4	11.33	60.4	13.06	61.2	13.14	62.0	13.20	63.6	13.34	65.5	13.46
	31	45.7	9.37	54.4	12.09	59.6	13.59	60.4	13.65	61.2	13.73	62.8	13.87	64.4	14.00
	33	45.7	9.98	54.4	12.91	58.6	14.10	59.4	14.18	60.2	14.24	61.8	14.39	63.4	14.53
	35	45.7	10.62	54.4	13.75	57.6	14.61	58.4	14.69	59.4	14.76	61.0	14.92	62.6	15.08
	37	45.7	11.31	54.4	14.65	56.8	15.13	57.6	15.21	58.4	15.29	60.0	15.45	61.6	15.62
	39	45.7	12.03	54.2	15.47	55.8	15.64	56.6	15.74	57.4	15.82	59.2	15.99	60.8	16.15
	41	43.2	13.39	51.7	17.32	54.7	18.41	55.5	17.03	56.5	17.13	58.1	17.31	59.7	17.49
	43	40.8	13.95	49.3	18.06	53.7	19.39	54.5	18.10	55.6	17.78	57.0	17.75	58.6	17.94
	44	40.2	14.55	48.9	18.83	52.1	20.45	53.1	19.24	54.2	18.45	55.9	18.20	57.6	18.39
	47	37.9	19.37	47.3	25.06	50.4	21.47	51.3	19.53	52.3	19.64	54.0	19.54	55.7	19.75
	50	34.7	19.02	42.4	24.61	45.0	22.64	45.7	21.15	46.6	20.96	48.2	20.89	50.1	20.65
	52	23.6	12.56	31.7	15.63	39.2	17.59	43.2	18.47	43.4	17.86	44.4	17.62	46.9	18.09

GMV X DC Inverter VRF Units

TC—Total capacity of outdoor unit; PI—Power input of outdoor unit															
Connection ratio	Outdoor air temp. (℃ DB)	Indoor air temp.													
		14.0℃ WB		17.0℃ WB		18.0℃ WB		19.0℃ WB		20.0℃ WB		22.0℃ WB		24.0℃ WB	
		20.0℃ DB		24.0℃ DB		26.0℃ DB		27.0℃ DB		28.0℃ DB		30.0℃ DB		32.0℃ DB	
		TC	PI	TC	PI	TC	PI	TC	PI	TC	PI	TC	PI	TC	PI
		kW	kW	kW	kW	kW	kW	kW	kW	kW	kW	kW	kW	kW	kW
110%	-5	41.9	5.04	49.9	6.49	58.0	7.79	62.0	7.83	66.1	7.88	71.2	7.95	72.7	8.02
	0	41.9	5.05	49.9	6.50	58.0	7.81	62.0	7.85	66.1	7.89	71.2	7.96	72.7	8.04
	4	41.9	5.07	49.9	6.53	58.0	7.84	62.0	7.88	66.1	7.92	71.2	7.99	72.7	8.07
	7	41.9	5.17	49.9	6.65	58.0	7.98	62.0	8.02	66.1	8.07	71.2	8.14	72.7	8.22
	10	41.9	5.53	49.9	6.74	58.0	8.01	62.0	8.65	66.1	9.32	71.1	9.88	72.7	9.55
	12	41.9	5.64	49.9	6.87	58.0	8.16	62.0	8.83	66.1	9.49	70.3	9.84	71.7	9.49
	14	41.9	5.74	49.9	6.99	58.0	8.32	62.0	8.98	66.1	9.67	69.3	9.84	70.9	9.47
	16	41.9	5.84	49.9	7.13	58.0	8.48	62.0	9.16	66.1	9.86	68.5	9.90	69.9	10.00
	18	41.9	5.96	49.9	7.26	58.0	8.65	62.0	9.41	66.1	10.33	67.5	10.41	69.1	10.51
	20	41.9	6.07	49.9	7.42	58.0	9.16	62.0	10.12	65.1	10.84	66.7	10.92	68.1	11.01
	21	41.9	6.13	49.9	7.64	58.0	9.49	62.0	10.49	64.6	11.09	66.1	11.17	67.7	11.27
	23	41.9	6.42	49.9	8.18	58.0	10.17	62.0	11.25	63.6	11.58	65.3	11.70	66.7	11.80
	25	41.9	6.83	49.9	8.75	58.0	10.88	62.0	12.05	62.8	12.09	64.2	12.21	65.9	12.30
	27	41.9	7.30	49.9	9.35	58.0	11.64	61.0	12.56	61.8	12.60	63.4	12.71	64.9	12.83
	29	41.9	7.79	49.9	9.98	58.0	12.44	60.2	13.06	61.0	13.12	62.4	13.24	64.0	13.36
	31	41.9	8.30	49.9	10.64	58.0	13.28	59.2	13.57	60.0	13.63	61.6	13.75	63.0	13.88
	33	41.9	8.83	49.9	11.35	57.6	14.00	58.4	14.08	59.2	14.14	60.6	14.28	62.2	14.41
	35	41.9	9.39	49.9	12.09	56.8	14.51	57.4	14.59	58.2	14.67	59.6	14.80	61.2	14.94
	37	41.9	10.00	49.9	12.87	55.8	15.04	56.6	15.10	57.2	15.17	58.8	15.33	60.2	15.47
	39	41.9	10.62	49.9	13.71	54.8	15.54	55.6	15.62	56.4	15.70	57.8	15.86	59.4	16.01
	41	39.6	11.84	47.4	15.23	54.0	18.28	54.6	16.92	55.4	17.01	56.8	17.17	58.3	17.33
	43	37.4	12.34	45.1	15.88	53.2	19.27	53.5	17.99	54.3	17.66	55.7	17.61	57.3	17.77
	44	36.9	12.87	45.0	16.56	51.4	20.31	52.2	19.11	53.1	18.33	54.6	18.06	56.3	18.23
	47	34.8	17.12	43.5	22.04	49.7	21.33	50.4	19.40	51.2	19.51	52.8	19.39	54.5	19.57
	50	31.8	16.81	39.0	21.64	44.4	22.49	44.9	21.01	45.7	20.83	47.1	20.72	49.0	20.47
	52	23.2	12.47	31.2	15.53	38.5	17.47	42.4	18.35	42.6	17.74	43.7	17.50	46.1	17.97
100%	-5	38.1	4.41	45.3	5.65	52.8	7.04	56.0	7.78	60.0	7.82	67.5	7.89	71.3	7.96
	0	38.1	4.42	45.3	5.66	52.8	7.06	56.0	7.80	60.0	7.83	67.5	7.91	71.3	7.98
	4	38.1	4.44	45.3	5.68	52.8	7.08	56.0	7.82	60.0	7.86	67.5	7.93	71.3	8.01
	7	38.1	4.52	45.3	5.78	52.8	7.21	56.0	7.97	60.0	8.01	67.5	8.08	71.3	8.15
	10	38.1	5.00	45.3	6.07	52.8	7.18	56.0	7.76	60.0	8.38	67.4	9.48	71.3	9.85
	12	38.1	5.07	45.3	6.15	52.8	7.28	56.0	7.86	60.0	8.54	67.4	9.64	70.3	9.77
	14	38.1	5.15	45.3	6.26	52.8	7.40	56.0	8.00	60.0	8.69	67.4	9.81	69.5	9.70
	16	38.1	5.27	45.3	6.40	52.8	7.57	56.0	8.18	60.0	8.89	67.2	10.03	68.5	9.91
	18	38.1	5.39	45.3	6.55	52.8	7.72	56.0	8.34	60.0	9.06	66.3	10.23	67.7	10.38
	20	38.1	5.47	45.3	6.64	52.8	7.97	56.0	8.78	60.0	9.64	65.2	10.76	66.7	10.93
	21	38.1	5.52	45.3	6.71	52.8	8.24	56.0	9.08	60.0	9.97	64.9	11.13	66.3	11.23
	23	38.1	5.67	45.3	7.17	52.8	8.87	56.0	9.76	60.0	10.72	64.1	11.78	65.2	11.88
	25	38.1	6.03	45.3	7.63	52.8	9.43	56.0	10.39	60.0	11.47	63.0	12.21	64.5	12.32
	27	38.1	6.44	45.3	8.15	52.8	10.12	56.0	11.14	60.0	12.30	62.0	12.64	63.4	12.75
	29	38.1	6.82	45.3	8.71	52.8	10.82	56.0	11.92	59.8	13.03	61.2	13.24	62.6	13.36
	31	38.1	7.26	45.3	9.27	52.8	11.54	56.0	12.84	59.1	13.56	59.8	13.78	61.6	13.91
	33	38.1	7.72	45.3	9.88	52.8	12.30	56.0	13.59	58.0	14.05	59.5	14.18	60.8	14.31
	35	38.1	8.21	45.3	10.52	52.8	13.11	56.0	14.49	57.0	14.56	58.4	14.69	59.8	14.83
	37	38.1	8.75	45.3	11.20	52.8	13.97	55.4	15.01	56.3	15.09	57.5	15.19	58.9	15.33
	39	38.1	9.32	45.3	11.93	52.8	14.87	54.6	15.51	54.9	15.58	56.8	15.69	57.5	15.84
	41	36.0	10.35	43.0	13.25	50.1	16.52	53.6	16.81	54.2	16.89	55.6	17.04	57.0	17.20
	43	34.0	10.79	40.9	13.82	48.9	17.41	52.6	17.86	53.5	17.53	54.4	17.48	56.4	17.64
	44	33.5	11.25	40.8	14.41	47.8	18.36	51.3	18.98	52.0	18.20	53.5	17.93	55.0	18.09
	47	31.6	14.97	39.4	19.17	46.2	19.28	49.5	19.27	50.2	19.37	51.7	19.25	53.2	19.42
	50	28.9	14.70	35.3	18.83	41.2	20.33	44.2	20.87	44.7	20.68	46.1	20.57	47.8	20.31
	52	22.8	11.36	30.6	14.14	37.9	15.91	41.7	16.70	41.9	16.15	42.9	15.93	45.3	16.36

TC—Total capacity of outdoor unit; PI—Power input of outdoor unit															
Connection ratio	Outdoor air temp. (℃ DB)	Indoor air temp.													
		14.0℃ WB		17.0℃ WB		18.0℃ WB		19.0℃ WB		20.0℃ WB		22.0℃ WB		24.0℃ WB	
		20.0℃ DB		24.0℃ DB		26.0℃ DB		27.0℃ DB		28.0℃ DB		30.0℃ DB		32.0℃ DB	
		TC	PI	TC	PI	TC	PI	TC	PI	TC	PI	TC	PI	TC	PI
		kW	kW	kW	kW	kW	kW	kW	kW	kW	kW	kW	kW	kW	kW
90%	-5	34.3	3.85	40.8	4.87	47.5	6.01	50.8	6.65	54.0	7.31	60.6	7.82	67.3	7.89
	0	34.3	3.86	40.8	4.88	47.5	6.03	50.8	6.66	54.0	7.32	60.6	7.84	67.3	7.91
	4	34.3	3.87	40.8	4.90	47.5	6.05	50.8	6.68	54.0	7.35	60.6	7.86	67.3	7.94
	7	34.3	3.94	40.8	4.99	47.5	6.16	50.8	6.81	54.0	7.49	60.6	8.01	67.3	8.08
	10	34.3	4.36	40.8	5.24	47.5	6.13	50.8	6.91	54.0	7.36	60.7	8.43	67.2	9.55
	12	34.3	4.42	40.8	5.31	47.5	6.22	50.8	7.00	54.0	7.50	60.7	8.58	67.2	9.68
	14	34.3	4.50	40.8	5.40	47.5	6.32	50.8	7.11	54.0	7.63	60.7	8.72	67.2	9.83
	16	34.3	4.60	40.8	5.52	47.5	6.47	50.8	7.27	54.0	7.80	60.7	8.92	67.0	10.03
	18	34.3	4.70	40.8	5.65	47.5	6.59	50.8	7.41	54.0	7.95	60.7	9.13	66.4	10.39
	20	34.3	4.77	40.8	5.73	47.5	6.81	50.8	7.56	54.0	8.28	60.7	9.81	65.3	10.82
	21	34.3	4.82	40.8	5.79	47.5	7.04	50.8	7.81	54.0	8.57	60.7	10.14	64.9	11.07
	23	34.3	4.94	40.8	6.18	47.5	7.57	50.8	8.40	54.0	9.17	60.7	10.89	63.8	11.64
	25	34.3	5.26	40.8	6.58	47.5	8.05	50.8	8.97	54.0	9.81	60.7	11.65	63.0	12.11
	27	34.3	5.62	40.8	7.03	47.5	8.64	50.8	9.57	54.0	10.50	60.7	12.43	62.0	12.64
	29	34.3	5.95	40.8	7.51	47.5	9.24	50.8	10.22	54.0	11.21	60.0	13.03	61.2	13.15
	31	34.3	6.33	40.8	8.00	47.5	9.85	50.8	10.91	54.0	11.96	59.0	13.51	60.2	13.69
	33	34.3	6.74	40.8	8.52	47.5	10.50	50.8	11.61	54.0	12.73	58.2	14.05	59.4	14.18
	35	34.3	7.17	40.8	9.07	47.5	11.20	50.8	12.37	54.0	13.61	57.2	14.56	58.4	14.70
	37	34.3	7.63	40.8	9.66	47.5	11.93	49.8	12.82	54.0	14.56	56.2	15.09	57.6	15.05
	39	34.3	8.13	40.8	10.29	47.5	12.70	49.2	13.24	54.0	15.44	55.4	15.65	56.6	15.61
	41	32.4	9.03	38.7	11.43	45.1	14.11	48.2	14.35	51.4	15.79	54.5	16.90	55.7	17.05
	43	30.6	9.41	36.8	11.91	43.9	14.88	47.3	15.25	50.4	16.39	53.5	17.33	54.7	17.51
	44	30.1	9.82	36.7	12.43	43.0	15.68	46.2	16.21	49.3	17.01	52.4	17.77	53.7	17.93
	47	28.4	13.06	35.5	16.54	41.6	16.46	44.6	16.46	47.5	18.10	50.6	19.08	52.0	19.25
	50	26.0	12.83	31.8	16.24	37.1	17.36	39.7	17.82	42.4	19.33	45.2	20.39	46.7	20.13
	52	20.5	10.59	27.6	13.18	34.1	14.83	37.5	15.57	37.7	15.06	39.1	14.86	40.8	15.25
80%	-5	30.5	3.32	36.3	4.10	42.2	5.10	45.1	5.61	47.9	6.13	54.0	7.28	59.8	7.80
	0	30.5	3.33	36.3	4.11	42.2	5.11	45.1	5.62	47.9	6.14	54.0	7.29	59.8	7.81
	4	30.5	3.34	36.3	4.12	42.2	5.13	45.1	5.64	47.9	6.17	54.0	7.32	59.8	7.84
	7	30.5	3.40	36.3	4.20	42.2	5.22	45.1	5.75	47.9	6.28	54.0	7.45	59.8	7.99
	10	30.5	3.96	36.3	4.75	42.2	5.59	45.1	6.01	48.0	6.44	54.0	7.36	59.8	8.54
	12	30.5	4.02	36.3	4.82	42.2	5.68	45.1	6.13	48.0	6.56	54.0	7.49	59.8	8.48
	14	30.5	4.10	36.3	4.92	42.2	5.78	45.1	6.23	48.0	6.69	54.0	7.61	59.8	8.67
	16	30.5	4.16	36.3	5.00	42.2	5.90	45.1	6.35	48.0	6.79	54.0	7.79	59.8	8.98
	18	30.5	4.24	36.3	5.10	42.2	6.03	45.1	6.48	48.0	6.92	54.0	7.96	59.8	9.61
	20	30.5	4.32	36.3	5.19	42.2	6.13	45.1	6.60	48.0	7.07	54.0	8.25	59.8	9.95
	21	30.5	4.35	36.3	5.23	42.2	6.19	45.1	6.68	48.0	7.23	54.0	8.55	59.8	10.66
	23	30.5	4.43	36.3	5.35	42.2	6.48	45.1	7.11	48.0	7.74	54.0	9.14	59.8	11.40
	25	30.5	4.57	36.3	5.68	42.2	6.93	45.1	7.60	48.0	8.26	54.0	9.79	59.8	12.16
	27	30.5	4.86	36.3	6.05	42.2	7.38	45.1	8.10	48.0	8.86	54.0	10.45	59.8	12.59
	29	30.5	5.18	36.3	6.44	42.2	7.87	45.1	8.63	47.9	9.44	54.0	11.15	59.8	13.05
	31	30.5	5.49	36.3	6.85	42.2	8.38	45.1	9.20	47.9	10.07	54.0	11.90	58.8	13.52
	33	30.5	5.84	36.3	7.64	42.2	8.92	45.1	9.80	47.9	10.72	54.0	12.70	58.0	14.01
	35	30.5	6.19	36.3	7.64	42.2	9.49	45.1	10.45	47.9	11.42	54.0	13.55	57.0	14.52
	37	30.5	6.56	36.3	8.22	42.2	10.10	44.3	11.13	47.9	12.16	54.0	14.44	56.2	15.06
	39	30.5	6.95	36.3	8.73	42.2	10.74	43.7	11.85	47.9	12.95	54.0	15.37	55.2	15.62
	41	28.8	7.80	34.4	9.62	40.1	11.96	42.9	12.12	45.5	13.25	51.4	15.72	54.3	16.85
	43	27.2	8.13	33.4	10.04	39.1	12.60	42.1	12.88	44.5	13.75	50.4	16.13	53.5	17.28
	44	26.8	8.48	32.6	10.46	38.2	13.29	41.1	13.69	43.7	14.27	49.4	16.54	52.4	17.72
	47	25.3	11.29	31.5	13.92	36.9	13.95	39.6	13.89	42.1	15.19	47.8	17.76	50.7	19.02
	50	23.1	11.08	28.3	13.67	33.0	14.71	35.3	15.04	37.6	16.21	42.6	18.98	45.6	19.89
	52	18.2	8.93	24.5	11.12	30.3	12.52	33.4	13.14	33.5	12.71	34.3	12.54	36.3	12.87

GMV X DC Inverter VRF Units

TC—Total capacity of outdoor unit; PI—Power input of outdoor unit															
Connection ratio	Outdoor air temp. (℃ DB)	Indoor air temp.													
		14.0℃ WB		17.0℃ WB		18.0℃ WB		19.0℃ WB		20.0℃ WB		22.0℃ WB		24.0℃ WB	
		20.0℃ DB		24.0℃ DB		26.0℃ DB		27.0℃ DB		28.0℃ DB		30.0℃ DB		32.0℃ DB	
		TC	PI	TC	PI	TC	PI	TC	PI	TC	PI	TC	PI	TC	PI
		kW	kW	kW	kW	kW	kW	kW	kW	kW	kW	kW	kW	kW	kW
70%	-5	26.6	2.83	31.7	3.50	36.9	4.25	39.5	4.66	42.1	5.08	47.1	5.98	52.4	6.95
	0	26.6	2.84	31.7	3.51	36.9	4.26	39.5	4.66	42.1	5.09	47.1	5.99	52.4	6.97
	4	26.6	2.85	31.7	3.52	36.9	4.27	39.5	4.68	42.1	5.10	47.1	6.01	52.4	6.99
	7	26.6	2.90	31.7	3.59	36.9	4.35	39.5	4.77	42.1	5.20	47.1	6.12	52.4	7.12
	10	26.6	3.50	31.7	4.14	36.9	4.82	39.5	5.19	42.0	5.57	47.2	6.33	52.4	7.11
	12	26.6	3.53	31.7	4.20	36.9	4.92	39.5	5.29	42.0	5.66	47.2	6.44	52.4	7.25
	14	26.6	3.59	31.7	4.28	36.9	5.00	39.5	5.37	42.0	5.76	47.2	6.56	52.4	7.38
	16	26.6	3.65	31.7	4.35	36.9	5.10	39.5	5.49	42.0	5.88	47.2	6.68	52.4	7.52
	18	26.6	3.71	31.7	4.43	36.9	5.19	39.5	5.59	42.0	5.98	47.2	6.82	52.4	7.67
	20	26.6	3.77	31.7	4.51	36.9	5.29	39.5	5.68	42.0	6.09	47.2	6.95	52.4	7.89
	21	26.6	3.81	31.7	4.55	36.9	5.33	39.5	5.74	42.0	6.15	47.2	7.03	52.4	8.16
	23	26.6	3.87	31.7	4.63	36.9	5.45	39.5	5.94	42.0	6.46	47.2	7.56	52.4	8.75
	25	26.6	3.94	31.7	4.82	36.9	5.80	39.5	6.35	42.0	6.89	47.2	8.08	52.4	9.35
	27	26.6	4.18	31.7	5.14	36.9	6.19	39.5	6.76	42.0	7.36	47.2	8.63	52.4	10.00
	29	26.6	4.43	31.7	5.45	36.9	6.58	39.5	7.21	42.0	7.83	47.2	9.20	52.4	10.68
	31	26.6	4.69	31.7	5.78	36.9	7.01	39.5	7.66	42.0	8.34	47.2	9.80	52.4	11.39
	33	26.6	4.98	31.7	6.15	36.9	7.46	39.5	8.14	42.0	8.89	47.2	10.45	52.4	12.15
	35	26.6	5.27	31.7	6.52	36.9	7.91	39.5	8.67	42.0	9.45	47.2	11.13	52.4	12.95
	37	26.6	5.57	31.7	6.91	36.9	8.42	38.8	9.22	42.0	10.06	47.2	11.85	52.4	13.79
	39	26.6	5.90	31.7	7.32	36.9	8.92	38.2	9.78	42.0	10.68	47.2	12.60	52.4	14.69
	41	25.2	6.64	30.1	8.22	35.1	9.97	37.5	10.06	40.0	10.96	44.9	12.91	49.9	15.02
	43	23.8	6.93	29.2	8.58	33.8	10.50	36.8	10.69	38.0	11.38	44.1	13.24	48.5	15.40
	44	23.4	7.22	28.5	8.94	33.4	11.07	35.9	11.36	38.4	11.81	43.2	13.58	48.2	15.80
	47	22.1	9.61	27.6	11.89	32.3	11.63	34.7	11.53	37.0	12.57	41.8	14.58	46.6	16.96
	50	20.3	9.44	24.7	11.68	28.8	12.26	30.9	12.49	33.0	13.42	37.3	15.58	41.9	17.74
	52	15.9	7.41	21.4	9.23	26.5	10.29	29.2	10.91	29.3	10.55	30.0	10.40	31.7	10.68
60%	-5	22.8	2.38	27.2	2.90	31.7	3.48	33.8	3.80	36.1	4.12	40.5	4.81	44.9	5.56
	0	22.8	2.38	27.2	2.91	31.7	3.49	33.8	3.80	36.1	4.13	40.5	4.82	44.9	5.57
	4	22.8	2.39	27.2	2.92	31.7	3.50	33.8	3.82	36.1	4.14	40.5	4.84	44.9	5.59
	7	22.8	2.44	27.2	2.98	31.7	3.57	33.8	3.89	36.1	4.22	40.5	4.93	44.9	5.69
	10	22.8	3.03	27.2	3.55	31.7	4.12	33.8	4.41	36.0	4.71	40.5	5.33	44.9	5.98
	12	22.8	3.09	27.2	3.61	31.7	4.20	33.8	4.49	36.0	4.78	40.5	5.43	44.9	6.07
	14	22.8	3.12	27.2	3.67	31.7	4.26	33.8	4.57	36.0	4.88	40.5	5.53	44.9	6.19
	16	22.8	3.16	27.2	3.73	31.7	4.34	33.8	4.65	36.0	4.96	40.5	5.62	44.9	6.31
	18	22.8	3.22	27.2	3.79	31.7	4.41	33.8	4.73	36.0	5.06	40.5	5.72	44.9	6.42
	20	22.8	3.26	27.2	3.87	31.7	4.49	33.8	4.82	36.0	5.16	40.5	5.84	44.9	6.56
	21	22.8	3.30	27.2	3.89	31.7	4.53	33.8	4.86	36.0	5.19	40.5	5.90	44.9	6.62
	23	22.8	3.34	27.2	3.96	31.7	4.61	33.8	4.96	36.0	5.29	40.5	6.13	44.9	7.05
	25	22.8	3.40	27.2	4.04	31.7	4.78	33.8	5.19	36.0	5.62	40.5	6.54	44.9	7.52
	27	22.8	3.53	27.2	4.28	31.7	5.10	33.8	5.55	36.0	6.00	40.5	6.97	44.9	8.03
	29	22.8	3.73	27.2	4.53	31.7	5.43	33.8	5.90	36.0	6.39	40.5	7.44	44.9	8.57
	31	22.8	3.96	27.2	4.82	31.7	5.76	33.8	6.27	36.0	6.80	40.5	7.91	44.9	9.12
	33	22.8	4.18	27.2	5.10	31.7	6.11	33.8	6.66	36.0	7.23	40.5	8.42	44.9	9.73
	35	22.8	4.43	27.2	5.41	31.7	6.48	33.8	7.07	36.0	7.67	40.5	8.96	44.9	10.35
	37	22.8	4.69	27.2	5.72	31.7	6.87	33.2	7.50	36.0	8.14	40.5	9.53	44.9	11.01
	39	22.8	4.94	27.2	6.05	31.7	7.28	32.8	7.95	36.0	8.65	40.5	10.12	44.9	11.72
	41	21.6	5.59	25.8	6.82	30.1	8.17	32.2	8.20	34.2	8.90	38.5	10.40	42.8	12.01
	43	20.4	5.82	24.5	7.10	29.2	8.61	31.6	8.71	33.2	9.24	38.1	10.66	41.9	12.32
	44	20.1	6.07	24.5	7.41	28.7	9.08	30.8	9.26	32.9	9.59	37.1	10.94	41.3	12.63
	47	19.0	8.08	23.7	9.86	27.7	9.53	29.7	9.40	31.7	10.21	35.8	11.74	40.0	13.56
	50	17.4	7.93	21.2	9.68	24.7	10.05	26.5	10.18	28.3	10.90	32.0	12.55	35.9	14.18
	52	13.7	6.05	18.4	7.53	22.7	8.47	25.0	8.89	25.1	8.60	25.7	8.48	27.2	8.71

TC—Total capacity of outdoor unit; PI—Power input of outdoor unit															
Connection ratio	Outdoor air temp. (℃ DB)	Indoor air temp.													
		14.0℃ WB		17.0℃ WB		18.0℃ WB		19.0℃ WB		20.0℃ WB		22.0℃ WB		24.0℃ WB	
		20.0℃ DB		24.0℃ DB		26.0℃ DB		27.0℃ DB		28.0℃ DB		30.0℃ DB		32.0℃ DB	
		TC	PI	TC	PI	TC	PI	TC	PI	TC	PI	TC	PI	TC	PI
		kW	kW	kW	kW	kW	kW	kW	kW	kW	kW	kW	kW	kW	kW
50%	-5	19.0	1.97	22.7	2.36	26.4	2.79	28.2	3.02	30.0	3.26	33.7	3.78	37.5	4.32
	0	19.0	1.98	22.7	2.36	26.4	2.79	28.2	3.03	30.0	3.27	33.7	3.78	37.5	4.33
	4	19.0	1.98	22.7	2.37	26.4	2.81	28.2	3.04	30.0	3.28	33.7	3.80	37.5	4.34
	7	19.0	2.02	22.7	2.42	26.4	2.86	28.2	3.09	30.0	3.34	33.7	3.87	37.5	4.43
	10	19.0	2.62	22.7	3.03	26.4	3.46	28.2	3.69	30.0	3.91	33.7	4.39	37.5	4.90
	12	19.0	2.64	22.7	3.07	26.4	3.52	28.2	3.73	30.0	3.98	33.7	4.47	37.5	4.98
	14	19.0	2.68	22.7	3.11	26.4	3.55	28.2	3.81	30.0	4.04	33.7	4.55	37.5	5.08
	16	19.0	2.71	22.7	3.14	26.4	3.61	28.2	3.87	30.0	4.10	33.7	4.63	37.5	5.16
	18	19.0	2.75	22.7	3.20	26.4	3.67	28.2	3.93	30.0	4.18	33.7	4.71	37.5	5.25
	20	19.0	2.79	22.7	3.24	26.4	3.73	28.2	4.00	30.0	4.26	33.7	4.80	37.5	5.35
	21	19.0	2.81	22.7	3.28	26.4	3.77	28.2	4.02	30.0	4.30	33.7	4.84	37.5	5.41
	23	19.0	2.85	22.7	3.32	26.4	3.83	28.2	4.10	30.0	4.37	33.7	4.92	37.5	5.53
	25	19.0	2.89	22.7	3.38	26.4	3.91	28.2	4.18	30.0	4.51	33.7	5.18	37.5	5.90
	27	19.0	2.95	22.7	3.52	26.4	4.12	28.2	4.45	30.0	4.78	33.7	5.51	37.5	6.29
	29	19.0	3.11	22.7	3.71	26.4	4.37	28.2	4.73	29.9	5.10	33.7	5.86	37.5	6.70
	31	19.0	3.28	22.7	3.93	26.4	4.67	28.2	5.02	29.9	5.41	33.7	6.23	37.5	7.13
	33	19.0	3.48	22.7	4.16	26.4	4.92	28.2	5.31	29.9	5.74	33.7	6.62	37.5	7.58
	35	19.0	3.67	22.7	4.39	26.4	5.19	28.2	5.62	29.9	6.07	33.7	7.03	37.5	8.05
	37	19.0	3.87	22.7	4.65	26.4	5.51	27.7	5.96	29.9	6.44	33.7	7.46	37.5	8.55
	39	19.0	4.08	22.7	4.90	26.4	5.82	27.3	6.31	29.9	6.83	33.7	7.91	37.5	9.08
	41	18.0	4.63	21.5	5.54	25.1	6.55	26.8	6.52	28.4	7.05	32.1	8.16	35.7	9.33
	43	17.0	4.83	20.4	5.81	24.4	6.89	26.3	6.99	28.0	7.32	31.2	8.37	34.8	9.58
	44	16.7	5.03	20.4	6.02	23.9	7.27	25.7	7.37	27.3	7.59	30.9	8.58	34.5	9.82
	47	15.8	6.69	19.7	8.01	23.1	7.64	24.8	7.48	26.3	8.08	29.8	9.21	33.3	10.54
	50	14.5	6.57	17.7	7.87	20.6	8.05	22.1	8.10	23.5	8.62	26.6	9.84	30.0	11.02
	52	11.4	4.81	15.3	5.99	18.9	6.74	20.8	7.07	20.9	6.84	21.4	6.75	22.7	6.93

GMV-615WM/B-X(P)

TC—Total capacity of outdoor unit; PI—Power input of outdoor unit															
Connection ratio	Outdoor air temp. (℃ DB)	Indoor air temp.													
		14.0℃ WB		17.0℃ WB		18.0℃ WB		19.0℃ WB		20.0℃ WB		22.0℃ WB		24.0℃ WB	
		20.0℃ DB		24.0℃ DB		26.0℃ DB		27.0℃ DB		28.0℃ DB		30.0℃ DB		32.0℃ DB	
		TC	PI	TC	PI	TC	PI	TC	PI	TC	PI	TC	PI	TC	PI
		kW	kW	kW	kW	kW	kW	kW	kW	kW	kW	kW	kW	kW	kW
135%	-5	54.4	7.52	64.8	9.16	75.2	9.27	78.1	9.32	79.5	9.37	81.5	9.48	83.6	9.58
	0	54.4	7.54	64.8	9.18	75.2	9.29	78.1	9.34	79.5	9.39	81.5	9.50	83.6	9.60
	4	54.4	7.56	64.8	9.21	75.2	9.32	78.1	9.37	79.5	9.42	81.5	9.53	83.6	9.63
	7	54.4	7.70	64.8	9.38	75.2	9.49	78.1	9.54	79.5	9.60	81.5	9.71	83.6	9.81
	10	54.4	7.84	64.8	9.58	75.2	11.39	78.1	11.65	79.0	11.42	81.0	10.93	82.9	10.43
	12	54.4	7.98	64.8	9.77	75.2	11.62	77.0	11.58	78.1	11.35	79.8	10.84	81.8	10.68
	14	54.4	8.14	64.8	9.95	75.0	11.76	76.1	11.53	77.0	11.28	79.0	11.19	81.0	11.30
	16	54.4	8.28	64.8	10.16	74.1	11.71	75.0	11.62	75.9	11.67	77.9	11.78	79.8	11.90
	18	54.4	8.44	64.8	10.36	73.0	12.15	73.9	12.22	75.0	12.29	77.0	12.40	79.0	12.52
	20	54.4	8.62	64.8	11.03	71.9	12.75	73.0	12.81	73.9	12.88	75.9	13.00	77.9	13.14
	21	54.4	8.85	64.8	11.42	71.4	13.04	72.5	13.11	73.4	13.18	75.4	13.32	77.4	13.43
	23	54.4	9.49	64.8	12.24	70.6	13.64	71.4	13.71	72.3	13.78	74.3	13.92	76.3	14.05
	25	54.4	10.13	64.8	13.11	69.4	14.24	70.6	14.30	71.4	14.40	73.4	14.53	75.4	14.67
	27	54.4	10.82	64.8	14.03	68.6	12.54	69.4	14.92	70.3	14.99	72.3	15.15	74.3	15.31
	29	54.4	11.55	64.8	14.99	67.5	15.43	68.3	15.52	69.4	15.61	71.4	15.77	73.4	15.93
	31	54.4	12.33	64.6	15.86	66.4	16.05	67.5	16.14	68.3	16.21	70.3	16.39	72.3	16.57
	33	54.4	13.14	63.5	16.46	65.5	16.62	66.4	16.73	67.5	16.83	69.4	17.01	71.2	17.22
	35	54.4	14.01	62.4	17.06	64.4	17.26	65.5	17.35	66.4	17.45	68.3	17.65	70.3	17.84
	37	54.4	14.90	61.5	17.67	63.5	17.88	64.4	17.97	65.5	18.09	67.2	18.29	69.2	18.50
	39	54.4	15.86	60.4	18.27	62.4	18.48	63.5	18.59	64.4	18.71	66.4	18.91	68.3	19.14
	41	51.4	17.65	59.3	21.49	61.2	21.75	62.2	20.13	63.1	20.24	65.1	20.48	67.0	20.69
	43	48.6	18.40	58.1	22.40	60.0	22.93	61.0	21.39	61.9	21.01	63.8	20.99	65.7	21.21
	44	47.9	19.19	56.1	23.37	58.2	24.17	59.6	22.73	60.6	21.81	62.6	21.54	64.7	21.76
	47	45.2	25.53	54.3	31.09	56.3	25.38	57.5	23.08	58.4	23.20	60.5	23.12	62.6	23.36
	50	41.4	25.07	48.7	30.53	50.3	26.76	51.3	24.99	52.1	24.77	54.0	24.71	56.3	24.43
	52	26.4	14.84	35.5	18.47	44.0	20.79	48.4	21.83	48.6	21.11	49.8	20.82	52.6	21.38
120%	-5	50.2	6.70	59.7	8.67	69.4	9.21	74.3	9.26	78.2	9.31	80.0	9.41	81.7	9.50
	0	50.2	6.71	59.7	8.68	69.4	9.23	74.3	9.27	78.2	9.32	80.0	9.42	81.7	9.52
	4	50.2	6.73	59.7	8.71	69.4	9.26	74.3	9.31	78.2	9.36	80.0	9.46	81.7	9.56
	7	50.2	6.86	59.7	8.88	69.4	9.43	74.3	9.48	78.2	9.53	80.0	9.63	81.7	9.73
	10	50.2	7.15	59.7	8.73	69.4	10.38	74.3	11.23	77.9	11.71	79.6	11.26	81.4	10.82
	12	50.2	7.29	59.7	8.89	69.4	10.59	74.3	11.44	76.7	11.65	78.5	11.21	80.3	10.75
	14	50.2	7.43	59.7	9.08	69.4	10.80	74.3	11.67	75.6	11.58	77.6	11.14	79.4	11.21
	16	50.2	7.57	59.7	9.26	69.4	11.00	73.9	11.76	74.8	11.60	76.5	11.71	78.3	11.81
	18	50.2	7.70	59.7	9.44	69.4	11.39	72.8	12.15	73.7	12.20	75.4	12.31	77.4	12.43
	20	50.2	7.86	59.7	9.81	69.4	12.24	71.9	12.75	72.8	12.79	74.5	12.91	76.3	13.02
	21	50.2	7.93	59.7	10.16	69.4	12.68	71.2	13.04	72.1	13.09	74.1	13.20	75.9	13.34
	23	50.2	8.48	59.7	10.89	69.4	13.57	70.3	13.62	71.2	13.69	73.0	13.82	74.8	13.94
	25	50.2	9.06	59.7	11.65	68.3	14.17	69.2	14.21	70.1	14.28	72.1	14.42	73.9	14.56
	27	50.2	9.67	59.7	12.45	67.5	14.74	68.3	14.83	69.2	14.90	71.0	15.04	72.8	15.18
	29	50.2	10.32	59.7	13.30	66.4	15.34	67.2	15.43	68.1	15.50	69.9	15.66	71.9	15.79
	31	50.2	11.00	59.7	14.19	65.5	15.96	66.4	16.02	67.2	16.12	69.0	16.28	70.8	16.44
	33	50.2	11.71	59.7	15.15	64.4	16.55	65.2	16.64	66.1	16.71	67.9	16.90	69.7	17.06
	35	50.2	12.47	59.7	16.14	63.3	17.15	64.1	17.24	65.2	17.33	67.0	17.51	68.8	17.70
	37	50.2	13.27	59.7	17.19	62.4	17.77	63.3	17.86	64.1	17.95	65.9	18.13	67.7	18.34
	39	50.2	14.12	59.5	18.16	61.3	18.36	62.2	18.48	63.0	18.57	65.0	18.78	66.8	18.96
	41	47.4	15.71	56.7	20.33	60.1	21.61	61.0	20.00	62.1	20.10	63.8	20.32	65.6	20.53
	43	44.8	16.38	54.1	21.20	59.0	22.77	59.8	21.25	61.1	20.87	62.6	20.83	64.3	21.06
	44	44.2	17.09	53.7	22.11	57.2	24.01	58.4	22.58	59.6	21.66	61.4	21.37	63.3	21.59
	47	41.7	22.73	52.0	29.42	55.3	25.21	56.3	22.93	57.4	23.05	59.3	22.94	61.2	23.18
	50	38.2	22.32	46.6	28.89	49.4	26.58	50.2	24.82	51.2	24.61	52.9	24.52	55.0	24.25
	52	25.9	14.74	34.8	18.35	43.1	20.65	47.4	21.68	47.6	20.97	48.8	20.68	51.5	21.24

TC—Total capacity of outdoor unit; PI—Power input of outdoor unit															
Connection ratio	Outdoor air temp. (℃ DB)	Indoor air temp.													
		14.0℃ WB		17.0℃ WB		18.0℃ WB		19.0℃ WB		20.0℃ WB		22.0℃ WB		24.0℃ WB	
		20.0℃ DB		24.0℃ DB		26.0℃ DB		27.0℃ DB		28.0℃ DB		30.0℃ DB		32.0℃ DB	
		TC	PI	TC	PI	TC	PI	TC	PI	TC	PI	TC	PI	TC	PI
		kW	kW	kW	kW	kW	kW	kW	kW	kW	kW	kW	kW	kW	kW
110%	-5	46.0	5.92	54.9	7.62	63.7	9.15	68.1	9.20	72.5	9.25	78.2	9.33	79.8	9.42
	0	46.0	5.93	54.9	7.63	63.7	9.16	68.1	9.21	72.5	9.26	78.2	9.35	79.8	9.44
	4	46.0	5.95	54.9	7.66	63.7	9.20	68.1	9.25	72.5	9.30	78.2	9.38	79.8	9.47
	7	46.0	6.06	54.9	7.80	63.7	9.37	68.1	9.42	72.5	9.47	78.2	9.56	79.8	9.65
	10	46.0	6.49	54.9	7.91	63.7	9.40	68.1	10.16	72.5	10.93	78.1	11.60	79.8	11.21
	12	46.0	6.63	54.9	8.07	63.7	9.58	68.1	10.36	72.5	11.14	77.2	11.55	78.7	11.14
	14	46.0	6.74	54.9	8.21	63.7	9.77	68.1	10.55	72.5	11.35	76.1	11.55	77.9	11.12
	16	46.0	6.85	54.9	8.37	63.7	9.95	68.1	10.75	72.5	11.58	75.2	11.62	76.7	11.74
	18	46.0	6.99	54.9	8.53	63.7	10.16	68.1	11.05	72.5	12.13	74.1	12.22	75.9	12.33
	20	46.0	7.13	54.9	8.71	63.7	10.75	68.1	11.87	71.4	12.72	73.2	12.81	74.8	12.93
	21	46.0	7.20	54.9	8.96	63.7	11.14	68.1	12.31	71.0	13.02	72.5	13.11	74.3	13.23
	23	46.0	7.54	54.9	9.61	63.7	11.94	68.1	13.20	69.9	13.59	71.7	13.73	73.2	13.85
	25	46.0	8.02	54.9	10.27	63.7	12.77	68.1	14.14	69.0	14.19	70.6	14.33	72.3	14.44
	27	46.0	8.57	54.9	10.98	63.7	13.66	67.0	14.74	67.9	14.79	69.7	14.92	71.2	15.06
	29	46.0	9.15	54.9	11.71	63.7	14.60	66.1	15.34	67.0	15.41	68.6	15.54	70.3	15.68
	31	46.0	9.74	54.9	12.49	63.7	15.59	65.0	15.93	65.9	16.00	67.7	16.14	69.2	16.30
	33	46.0	10.36	54.9	13.32	63.3	16.44	64.1	16.53	65.0	16.60	66.6	16.76	68.3	16.92
	35	46.0	11.03	54.9	14.19	62.4	17.03	63.0	17.12	63.9	17.22	65.5	17.38	67.2	17.54
	37	46.0	11.74	54.9	15.11	61.3	17.65	62.2	17.72	62.8	17.81	64.6	18.00	66.1	18.16
	39	46.0	12.47	54.9	16.09	60.2	18.25	61.0	18.34	61.9	18.43	63.5	18.61	65.2	18.80
	41	43.5	13.89	52.1	17.88	59.3	21.46	59.9	19.86	60.8	19.97	62.3	20.16	64.1	20.34
	43	41.1	14.49	49.5	18.64	58.4	22.62	58.8	21.12	59.7	20.73	61.2	20.67	62.9	20.85
	44	40.5	15.11	49.4	19.44	56.4	23.85	57.4	22.43	58.4	21.52	60.0	21.20	61.9	21.40
	47	38.2	20.10	47.7	25.87	54.6	25.04	55.3	22.78	56.2	22.90	57.9	22.76	59.8	22.97
	50	35.0	19.74	42.8	25.40	48.7	26.40	49.4	24.66	50.2	24.45	51.7	24.33	53.8	24.03
	52	25.4	14.64	34.2	18.23	42.3	20.51	46.6	21.54	46.8	20.83	48.0	20.55	50.7	21.10
100%	-5	41.8	5.18	49.8	6.63	57.9	8.27	61.5	9.13	65.9	9.18	74.1	9.26	78.2	9.35
	0	41.8	5.19	49.8	6.64	57.9	8.28	61.5	9.15	65.9	9.20	74.1	9.28	78.2	9.36
	4	41.8	5.21	49.8	6.67	57.9	8.31	61.5	9.19	65.9	9.23	74.1	9.31	78.2	9.40
	7	41.8	5.30	49.8	6.79	57.9	8.47	61.5	9.36	65.9	9.40	74.1	9.49	78.2	9.57
	10	41.8	5.87	49.8	7.13	57.9	8.43	61.5	9.11	65.9	9.83	74.1	11.13	78.3	11.57
	12	41.8	5.95	49.8	7.22	57.9	8.54	61.5	9.23	65.9	10.02	74.1	11.32	77.2	11.47
	14	41.8	6.05	49.8	7.35	57.9	8.69	61.5	9.39	65.9	10.21	74.1	11.52	76.3	11.38
	16	41.8	6.19	49.8	7.51	57.9	8.89	61.5	9.61	65.9	10.44	73.8	11.78	75.2	11.64
	18	41.8	6.32	49.8	7.68	57.9	9.06	61.5	9.79	65.9	10.64	72.8	12.00	74.3	12.19
	20	41.8	6.42	49.8	7.80	57.9	9.36	61.5	10.31	65.9	11.32	71.7	12.64	73.2	12.83
	21	41.8	6.49	49.8	7.88	57.9	9.68	61.5	10.66	65.9	11.70	71.2	13.07	72.8	13.18
	23	41.8	6.65	49.8	8.42	57.9	10.41	61.5	11.46	65.9	12.58	70.4	13.83	71.7	13.95
	25	41.8	7.08	49.8	8.96	57.9	11.07	61.5	12.19	65.9	13.46	69.2	14.33	70.8	14.46
	27	41.8	7.56	49.8	9.57	57.9	11.88	61.5	13.08	65.9	14.44	68.1	14.83	69.7	14.97
	29	41.8	8.01	49.8	10.22	57.9	12.70	61.5	13.99	65.7	15.30	67.2	15.55	68.7	15.69
	31	41.8	8.52	49.8	10.89	57.9	13.54	61.5	15.08	64.9	15.92	65.6	16.18	67.7	16.32
	33	41.8	9.06	49.8	11.59	57.9	14.44	61.5	15.96	63.7	16.50	65.3	16.65	66.8	16.80
	35	41.8	9.64	49.8	12.35	57.9	15.39	61.5	17.01	62.6	17.10	64.1	17.25	65.6	17.40
	37	41.8	10.27	49.8	13.15	57.9	16.39	60.8	17.62	61.8	17.71	63.2	17.84	64.7	18.00
	39	41.8	10.94	49.8	14.00	57.9	17.46	60.0	18.20	60.3	18.29	62.4	18.42	63.2	18.59
	41	39.5	12.15	47.3	15.56	55.1	19.40	58.9	19.73	59.5	19.83	61.0	20.01	62.6	20.19
	43	37.3	12.67	44.9	16.23	53.7	20.44	57.8	20.97	58.7	20.58	59.7	20.52	62.0	20.71
	44	36.8	13.21	44.8	16.91	52.4	21.55	56.4	22.28	57.1	21.37	58.7	21.04	60.4	21.23
	47	34.7	17.58	43.3	22.51	50.7	22.63	54.4	22.62	55.1	22.74	56.7	22.60	58.4	22.80
	50	31.8	17.26	38.8	22.10	45.3	23.86	48.5	24.49	49.1	24.27	50.6	24.15	52.5	23.84
	52	25.0	13.33	33.6	16.59	41.6	18.67	45.8	19.61	46.0	18.96	47.1	18.70	49.8	19.20

GMV X DC Inverter VRF Units

TC—Total capacity of outdoor unit; PI—Power input of outdoor unit															
Connection ratio	Outdoor air temp. (℃ DB)	Indoor air temp.													
		14.0℃ WB		17.0℃ WB		18.0℃ WB		19.0℃ WB		20.0℃ WB		22.0℃ WB		24.0℃ WB	
		20.0℃ DB		24.0℃ DB		26.0℃ DB		27.0℃ DB		28.0℃ DB		30.0℃ DB		32.0℃ DB	
		TC	PI	TC	PI	TC	PI	TC	PI	TC	PI	TC	PI	TC	PI
		kW	kW	kW	kW	kW	kW	kW	kW	kW	kW	kW	kW	kW	kW
90%	-5	37.6	4.52	44.8	5.72	52.2	7.06	55.7	7.80	59.3	8.58	66.6	9.18	73.9	9.26
	0	37.6	4.53	44.8	5.73	52.2	7.07	55.7	7.82	59.3	8.60	66.6	9.20	73.9	9.28
	4	37.6	4.54	44.8	5.75	52.2	7.10	55.7	7.84	59.3	8.63	66.6	9.23	73.9	9.32
	7	37.6	4.63	44.8	5.86	52.2	7.23	55.7	7.99	59.3	8.79	66.6	9.40	73.9	9.49
	10	37.6	5.12	44.8	6.15	52.2	7.20	55.7	8.11	59.3	8.64	66.7	9.90	73.9	11.21
	12	37.6	5.19	44.8	6.23	52.2	7.30	55.7	8.22	59.3	8.81	66.7	10.07	73.9	11.36
	14	37.6	5.28	44.8	6.34	52.2	7.42	55.7	8.35	59.3	8.96	66.7	10.24	73.9	11.55
	16	37.6	5.40	44.8	6.48	52.2	7.59	55.7	8.53	59.3	9.16	66.7	10.47	73.6	11.77
	18	37.6	5.52	44.8	6.63	52.2	7.74	55.7	8.70	59.3	9.34	66.7	10.72	73.0	12.20
	20	37.6	5.60	44.8	6.73	52.2	7.99	55.7	8.88	59.3	9.73	66.7	11.51	71.7	12.70
	21	37.6	5.66	44.8	6.80	52.2	8.27	55.7	9.17	59.3	10.06	66.7	11.91	71.2	12.99
	23	37.6	5.80	44.8	7.26	52.2	8.89	55.7	9.86	59.3	10.77	66.7	12.79	70.1	13.66
	25	37.6	6.17	44.8	7.72	52.2	9.45	55.7	10.53	59.3	11.52	66.7	13.68	69.2	14.21
	27	37.6	6.60	44.8	8.25	52.2	10.14	55.7	11.23	59.3	12.33	66.7	14.60	68.1	14.84
	29	37.6	6.99	44.8	8.82	52.2	10.85	55.7	12.00	59.3	13.16	65.9	15.30	67.2	15.44
	31	37.6	7.43	44.8	9.39	52.2	11.57	55.7	12.81	59.3	14.04	64.8	15.86	66.1	16.07
	33	37.6	7.91	44.8	10.00	52.2	12.33	55.7	13.63	59.3	14.94	63.9	16.50	65.2	16.65
	35	37.6	8.41	44.8	10.65	52.2	13.15	55.7	14.53	59.3	15.98	62.8	17.10	64.1	17.25
	37	37.6	8.96	44.8	11.34	52.2	14.00	54.7	15.05	59.3	17.10	61.7	17.71	63.3	17.67
	39	37.6	9.54	44.8	12.08	52.2	14.91	54.0	15.55	59.3	18.12	60.8	18.37	62.2	18.32
	41	35.6	10.60	42.5	13.42	49.6	16.56	53.0	16.85	56.4	18.54	59.8	19.83	61.1	20.01
	43	33.6	11.05	40.4	13.98	48.2	17.47	52.0	17.91	55.3	19.24	58.8	20.34	60.1	20.56
	44	33.1	11.53	40.3	14.59	47.2	18.41	50.7	19.03	54.2	19.97	57.5	20.86	59.0	21.05
	47	31.2	15.34	39.0	19.41	45.6	19.33	48.9	19.32	52.2	21.25	55.6	22.40	57.1	22.60
	50	28.6	15.06	34.9	19.06	40.7	20.38	43.6	20.92	46.6	22.69	49.6	23.94	51.3	23.63
	52	22.5	12.43	30.3	15.47	37.4	17.41	41.2	18.28	41.4	17.68	42.9	17.44	44.8	17.91
80%	-5	33.4	3.90	39.8	4.81	46.4	5.98	49.5	6.59	52.6	7.20	59.3	8.54	65.7	9.15
	0	33.4	3.91	39.8	4.82	46.4	5.99	49.5	6.60	52.6	7.21	59.3	8.56	65.7	9.17
	4	33.4	3.92	39.8	4.84	46.4	6.02	49.5	6.62	52.6	7.24	59.3	8.59	65.7	9.21
	7	33.4	4.00	39.8	4.93	46.4	6.13	49.5	6.75	52.6	7.37	59.3	8.75	65.7	9.38
	10	33.4	4.65	39.8	5.57	46.4	6.56	49.5	7.06	52.7	7.56	59.3	8.64	65.7	10.03
	12	33.4	4.72	39.8	5.66	46.4	6.67	49.5	7.20	52.7	7.71	59.3	8.79	65.7	9.95
	14	33.4	4.81	39.8	5.78	46.4	6.79	49.5	7.31	52.7	7.85	59.3	8.94	65.7	10.17
	16	33.4	4.88	39.8	5.87	46.4	6.92	49.5	7.45	52.7	7.97	59.3	9.14	65.7	10.54
	18	33.4	4.97	39.8	5.98	46.4	7.08	49.5	7.61	52.7	8.12	59.3	9.35	65.7	11.28
	20	33.4	5.07	39.8	6.10	46.4	7.20	49.5	7.75	52.7	8.30	59.3	9.68	65.7	11.69
	21	33.4	5.11	39.8	6.14	46.4	7.27	49.5	7.84	52.7	8.49	59.3	10.04	65.7	12.51
	23	33.4	5.20	39.8	6.28	46.4	7.61	49.5	8.34	52.7	9.08	59.3	10.73	65.7	13.38
	25	33.4	5.36	39.8	6.67	46.4	8.14	49.5	8.92	52.7	9.69	59.3	11.49	65.7	14.28
	27	33.4	5.71	39.8	7.11	46.4	8.67	49.5	9.51	52.7	10.40	59.3	12.27	65.7	14.78
	29	33.4	6.07	39.8	7.57	46.4	9.24	49.5	10.13	52.6	11.09	59.3	13.09	65.7	15.32
	31	33.4	6.44	39.8	8.05	46.4	9.83	49.5	10.80	52.6	11.82	59.3	13.97	64.6	15.87
	33	33.4	6.85	39.8	8.96	46.4	10.48	49.5	11.50	52.6	12.59	59.3	14.91	63.7	16.45
	35	33.4	7.27	39.8	8.96	46.4	11.14	49.5	12.26	52.6	13.40	59.3	15.91	62.6	17.05
	37	33.4	7.70	39.8	9.65	46.4	11.85	48.7	13.06	52.6	14.28	59.3	16.95	61.7	17.68
	39	33.4	8.16	39.8	10.25	46.4	12.61	48.0	13.91	52.6	15.20	59.3	18.05	60.6	18.33
	41	31.6	9.16	37.8	11.29	44.0	14.04	47.1	14.23	50.0	15.55	56.4	18.46	59.7	19.77
	43	29.9	9.54	36.7	11.78	42.9	14.79	46.2	15.13	48.9	16.14	55.3	18.93	58.7	20.28
	44	29.4	9.96	35.8	12.28	42.0	15.60	45.1	16.07	48.0	16.76	54.3	19.41	57.6	20.80
	47	27.8	13.25	34.6	16.34	40.6	16.38	43.5	16.31	46.2	17.83	52.4	20.84	55.7	22.33
	50	25.4	13.01	31.1	16.04	36.2	17.27	38.8	17.66	41.3	19.03	46.8	22.28	50.1	23.35
	52	20.0	10.49	26.9	13.06	33.3	14.69	36.6	15.43	36.8	14.92	37.7	14.72	39.8	15.11

TC—Total capacity of outdoor unit; PI—Power input of outdoor unit															
Connection ratio	Outdoor air temp. (℃ DB)	Indoor air temp.													
		14.0℃ WB		17.0℃ WB		18.0℃ WB		19.0℃ WB		20.0℃ WB		22.0℃ WB		24.0℃ WB	
		20.0℃ DB		24.0℃ DB		26.0℃ DB		27.0℃ DB		28.0℃ DB		30.0℃ DB		32.0℃ DB	
		TC	PI	TC	PI	TC	PI	TC	PI	TC	PI	TC	PI	TC	PI
		kW	kW	kW	kW	kW	kW	kW	kW	kW	kW	kW	kW	kW	kW
70%	-5	29.3	3.32	34.8	4.11	40.6	4.99	43.4	5.47	46.2	5.96	51.8	7.02	57.5	8.16
	0	29.3	3.33	34.8	4.12	40.6	5.00	43.4	5.48	46.2	5.97	51.8	7.03	57.5	8.18
	4	29.3	3.34	34.8	4.13	40.6	5.01	43.4	5.50	46.2	5.99	51.8	7.06	57.5	8.21
	7	29.3	3.40	34.8	4.21	40.6	5.11	43.4	5.60	46.2	6.10	51.8	7.19	57.5	8.36
	10	29.3	4.10	34.8	4.86	40.6	5.66	43.4	6.10	46.1	6.53	51.8	7.43	57.5	8.34
	12	29.3	4.15	34.8	4.93	40.6	5.78	43.4	6.21	46.1	6.65	51.8	7.57	57.5	8.50
	14	29.3	4.22	34.8	5.02	40.6	5.87	43.4	6.30	46.1	6.76	51.8	7.70	57.5	8.67
	16	29.3	4.29	34.8	5.11	40.6	5.98	43.4	6.44	46.1	6.90	51.8	7.84	57.5	8.83
	18	29.3	4.36	34.8	5.20	40.6	6.10	43.4	6.56	46.1	7.01	51.8	8.00	57.5	9.01
	20	29.3	4.42	34.8	5.30	40.6	6.21	43.4	6.67	46.1	7.15	51.8	8.16	57.5	9.26
	21	29.3	4.47	34.8	5.34	40.6	6.26	43.4	6.74	46.1	7.22	51.8	8.25	57.5	9.58
	23	29.3	4.54	34.8	5.43	40.6	6.40	43.4	6.97	46.1	7.59	51.8	8.87	57.5	10.27
	25	29.3	4.63	34.8	5.66	40.6	6.81	43.4	7.45	46.1	8.09	51.8	9.49	57.5	10.98
	27	29.3	4.91	34.8	6.03	40.6	7.27	43.4	7.93	46.1	8.64	51.8	10.13	57.5	11.74
	29	29.3	5.20	34.8	6.40	40.6	7.73	43.4	8.46	46.1	9.19	51.8	10.80	57.5	12.54
	31	29.3	5.50	34.8	6.79	40.6	8.23	43.4	8.99	46.1	9.79	51.8	11.51	57.5	13.36
	33	29.3	5.85	34.8	7.22	40.6	8.76	43.4	9.56	46.1	10.43	51.8	12.26	57.5	14.26
	35	29.3	6.19	34.8	7.66	40.6	9.28	43.4	10.18	46.1	11.10	51.8	13.07	57.5	15.20
	37	29.3	6.53	34.8	8.12	40.6	9.88	42.6	10.82	46.1	11.81	51.8	13.92	57.5	16.18
	39	29.3	6.92	34.8	8.60	40.6	10.48	42.0	11.49	46.1	12.54	51.8	14.79	57.5	17.24
	41	27.7	7.80	33.1	9.65	38.5	11.70	41.2	11.81	43.9	12.87	49.4	15.16	54.8	17.63
	43	26.1	8.13	32.1	10.07	37.2	12.33	40.4	12.55	41.7	13.35	48.4	15.54	53.3	18.08
	44	25.8	8.48	31.4	10.49	36.7	13.00	39.4	13.33	42.1	13.87	47.5	15.94	52.9	18.54
	47	24.3	11.28	30.3	13.96	35.5	13.65	38.1	13.54	40.6	14.76	45.9	17.12	51.2	19.91
	50	22.2	11.08	27.2	13.71	31.7	14.39	33.9	14.66	36.2	15.76	41.0	18.29	46.0	20.82
	52	17.5	8.70	23.5	10.84	29.1	12.08	32.0	12.80	32.2	12.38	33.0	12.21	34.8	12.54
60%	-5	25.1	2.79	29.9	3.41	34.8	4.09	37.2	4.46	39.6	4.84	44.5	5.65	49.3	6.52
	0	25.1	2.80	29.9	3.42	34.8	4.09	37.2	4.46	39.6	4.85	44.5	5.66	49.3	6.54
	4	25.1	2.81	29.9	3.43	34.8	4.11	37.2	4.48	39.6	4.87	44.5	5.68	49.3	6.56
	7	25.1	2.86	29.9	3.49	34.8	4.19	37.2	4.56	39.6	4.96	44.5	5.79	49.3	6.68
	10	25.1	3.55	29.9	4.17	34.8	4.84	37.2	5.18	39.5	5.52	44.4	6.26	49.3	7.01
	12	25.1	3.62	29.9	4.24	34.8	4.93	37.2	5.27	39.5	5.62	44.4	6.37	49.3	7.13
	14	25.1	3.67	29.9	4.31	34.8	5.00	37.2	5.36	39.5	5.73	44.4	6.49	49.3	7.27
	16	25.1	3.71	29.9	4.38	34.8	5.09	37.2	5.46	39.5	5.82	44.4	6.60	49.3	7.40
	18	25.1	3.78	29.9	4.45	34.8	5.18	37.2	5.55	39.5	5.94	44.4	6.72	49.3	7.54
	20	25.1	3.83	29.9	4.54	34.8	5.27	37.2	5.66	39.5	6.05	44.4	6.85	49.3	7.70
	21	25.1	3.87	29.9	4.56	34.8	5.32	37.2	5.71	39.5	6.10	44.4	6.92	49.3	7.77
	23	25.1	3.92	29.9	4.65	34.8	5.41	37.2	5.82	39.5	6.21	44.4	7.20	49.3	8.28
	25	25.1	3.99	29.9	4.75	34.8	5.62	37.2	6.10	39.5	6.60	44.4	7.68	49.3	8.83
	27	25.1	4.15	29.9	5.02	34.8	5.98	37.2	6.51	39.5	7.04	44.4	8.18	49.3	9.42
	29	25.1	4.38	29.9	5.32	34.8	6.37	37.2	6.92	39.5	7.50	44.4	8.73	49.3	10.06
	31	25.1	4.65	29.9	5.66	34.8	6.76	37.2	7.36	39.5	7.98	44.4	9.28	49.3	10.71
	33	25.1	4.91	29.9	5.98	34.8	7.18	37.2	7.82	39.5	8.48	44.4	9.88	49.3	11.42
	35	25.1	5.20	29.9	6.35	34.8	7.61	37.2	8.30	39.5	9.01	44.4	10.52	49.3	12.15
	37	25.1	5.50	29.9	6.72	34.8	8.07	36.5	8.80	39.5	9.56	44.4	11.19	49.3	12.93
	39	25.1	5.80	29.9	7.11	34.8	8.55	36.0	9.33	39.5	10.16	44.4	11.87	49.3	13.75
	41	23.7	6.56	28.4	8.00	33.0	9.59	35.3	9.63	37.6	10.45	42.3	12.21	47.0	14.09
	43	22.4	6.84	26.9	8.34	32.1	10.11	34.7	10.23	36.5	10.85	41.8	12.51	46.0	14.46
	44	22.1	7.13	26.9	8.70	31.5	10.66	33.8	10.87	36.1	11.26	40.7	12.84	45.4	14.82
	47	20.8	9.49	26.0	11.58	30.4	11.19	32.6	11.04	34.8	11.98	39.3	13.78	43.9	15.92
	50	19.1	9.31	23.3	11.37	27.2	11.80	29.1	11.95	31.0	12.79	35.1	14.73	39.5	16.65
	52	15.0	7.10	20.2	8.83	24.9	9.94	27.5	10.44	27.6	10.09	28.3	9.96	29.9	10.22

GMV X DC Inverter VRF Units

TC—Total capacity of outdoor unit; PI—Power input of outdoor unit															
Connection ratio	Outdoor air temp. (℃ DB)	Indoor air temp.													
		14.0℃ WB		17.0℃ WB		18.0℃ WB		19.0℃ WB		20.0℃ WB		22.0℃ WB		24.0℃ WB	
		20.0℃ DB		24.0℃ DB		26.0℃ DB		27.0℃ DB		28.0℃ DB		30.0℃ DB		32.0℃ DB	
		TC	PI	TC	PI	TC	PI	TC	PI	TC	PI	TC	PI	TC	PI
		kW	kW	kW	kW	kW	kW	kW	kW	kW	kW	kW	kW	kW	kW
50%	-5	20.9	2.31	24.9	2.77	29.0	3.27	31.0	3.55	33.0	3.83	37.0	4.43	41.1	5.07
	0	20.9	2.32	24.9	2.78	29.0	3.28	31.0	3.55	33.0	3.84	37.0	4.44	41.1	5.08
	4	20.9	2.33	24.9	2.79	29.0	3.29	31.0	3.57	33.0	3.85	37.0	4.46	41.1	5.10
	7	20.9	2.37	24.9	2.84	29.0	3.35	31.0	3.63	33.0	3.92	37.0	4.54	41.1	5.19
	10	20.9	3.07	24.9	3.55	29.0	4.06	31.0	4.33	33.0	4.58	37.0	5.16	41.1	5.75
	12	20.9	3.09	24.9	3.60	29.0	4.13	31.0	4.38	33.0	4.68	37.0	5.25	41.1	5.85
	14	20.9	3.14	24.9	3.64	29.0	4.17	31.0	4.47	33.0	4.75	37.0	5.34	41.1	5.96
	16	20.9	3.19	24.9	3.69	29.0	4.24	31.0	4.54	33.0	4.81	37.0	5.43	41.1	6.05
	18	20.9	3.23	24.9	3.76	29.0	4.31	31.0	4.61	33.0	4.91	37.0	5.52	41.1	6.17
	20	20.9	3.28	24.9	3.81	29.0	4.38	31.0	4.70	33.0	5.00	37.0	5.64	41.1	6.28
	21	20.9	3.30	24.9	3.85	29.0	4.42	31.0	4.72	33.0	5.04	37.0	5.69	41.1	6.35
	23	20.9	3.35	24.9	3.90	29.0	4.49	31.0	4.81	33.0	5.14	37.0	5.78	41.1	6.49
	25	20.9	3.39	24.9	3.97	29.0	4.58	31.0	4.91	33.0	5.30	37.0	6.07	41.1	6.92
	27	20.9	3.46	24.9	4.13	29.0	4.84	31.0	5.23	33.0	5.62	37.0	6.46	41.1	7.38
	29	20.9	3.64	24.9	4.36	29.0	5.14	31.0	5.55	32.8	5.98	37.0	6.88	41.1	7.86
	31	20.9	3.85	24.9	4.61	29.0	5.48	31.0	5.89	32.8	6.35	37.0	7.31	41.1	8.37
	33	20.9	4.08	24.9	4.88	29.0	5.78	31.0	6.24	32.8	6.74	37.0	7.77	41.1	8.89
	35	20.9	4.31	24.9	5.16	29.0	6.10	31.0	6.60	32.8	7.13	37.0	8.25	41.1	9.44
	37	20.9	4.54	24.9	5.46	29.0	6.46	30.4	6.99	32.8	7.57	37.0	8.76	41.1	10.04
	39	20.9	4.79	24.9	5.75	29.0	6.83	30.0	7.40	32.8	8.02	37.0	9.28	41.1	10.66
	41	19.8	5.43	23.6	6.50	27.5	7.68	29.4	7.66	31.2	8.27	35.3	9.57	39.2	10.96
	43	18.7	5.67	22.5	6.82	26.8	8.09	28.9	8.21	30.7	8.59	34.3	9.82	38.3	11.24
	44	18.4	5.90	22.4	7.07	26.2	8.54	28.2	8.65	30.0	8.91	33.9	10.07	37.8	11.52
	47	17.3	7.86	21.6	9.40	25.4	8.96	27.2	8.78	28.9	9.48	32.8	10.81	36.6	12.37
	50	15.9	7.71	19.4	9.23	22.6	9.45	24.2	9.51	25.8	10.12	29.3	11.55	32.9	12.94
	52	12.5	5.65	16.8	7.03	20.8	7.91	22.9	8.30	23.0	8.03	23.6	7.92	24.9	8.13

GMV-680WM/B-X(P)

TC—Total capacity of outdoor unit; PI—Power input of outdoor unit															
Connection ratio	Outdoor air temp. (℃ DB)	Indoor air temp.													
		14.0℃ WB		17.0℃ WB		18.0℃ WB		19.0℃ WB		20.0℃ WB		22.0℃ WB		24.0℃ WB	
		20.0℃ DB		24.0℃ DB		26.0℃ DB		27.0℃ DB		28.0℃ DB		30.0℃ DB		32.0℃ DB	
		TC	PI	TC	PI	TC	PI	TC	PI	TC	PI	TC	PI	TC	PI
		kW	kW	kW	kW	kW	kW	kW	kW	kW	kW	kW	kW	kW	kW
135%	-5	60.2	9.06	71.7	11.04	83.2	11.17	86.3	11.23	87.9	11.29	90.2	11.42	92.4	11.54
	0	60.2	9.08	71.7	11.06	83.2	11.19	86.3	11.25	87.9	11.31	90.2	11.45	92.4	11.56
	4	60.2	9.12	71.7	11.10	83.2	11.23	86.3	11.29	87.9	11.35	90.2	11.49	92.4	11.61
	7	60.2	9.28	71.7	11.31	83.2	11.44	86.3	11.50	87.9	11.56	90.2	11.70	92.4	11.82
	10	60.2	9.45	71.7	11.55	83.2	13.73	86.3	14.04	87.3	13.76	89.5	13.18	91.7	12.57
	12	60.2	9.61	71.7	11.77	83.2	14.01	85.1	13.95	86.3	13.68	88.3	13.07	90.5	12.87
	14	60.2	9.81	71.7	11.99	82.9	14.17	84.1	13.90	85.1	13.59	87.3	13.48	89.5	13.62
	16	60.2	9.97	71.7	12.24	81.9	14.12	82.9	14.01	83.9	14.06	86.1	14.20	88.3	14.34
	18	60.2	10.17	71.7	12.49	80.7	14.64	81.7	14.73	82.9	14.81	85.1	14.95	87.3	15.08
	20	60.2	10.39	71.7	13.29	79.5	15.36	80.7	15.44	81.7	15.53	83.9	15.67	86.1	15.83
	21	60.2	10.66	71.7	13.76	79.0	15.72	80.2	15.80	81.2	15.89	83.4	16.05	85.6	16.19
	23	60.2	11.44	71.7	14.75	78.0	16.44	79.0	16.52	80.0	16.60	82.2	16.77	84.4	16.94
	25	60.2	12.21	71.7	15.80	76.8	17.16	78.0	17.24	79.0	17.35	81.2	17.52	83.4	17.68
	27	60.2	13.04	71.7	16.91	75.8	15.11	76.8	17.99	77.8	18.07	80.0	18.26	82.2	18.46
	29	60.2	13.92	71.7	18.07	74.6	18.59	75.6	18.70	76.8	18.81	79.0	19.01	81.2	19.20
	31	60.2	14.86	71.4	19.12	73.4	19.34	74.6	19.45	75.6	19.53	77.8	19.75	80.0	19.98
	33	60.2	15.83	70.2	19.84	72.4	20.03	73.4	20.17	74.6	20.28	76.8	20.50	78.7	20.75
	35	60.2	16.88	69.0	20.56	71.2	20.80	72.4	20.91	73.4	21.02	75.6	21.27	77.8	21.49
	37	60.2	17.96	68.0	21.30	70.2	21.55	71.2	21.66	72.4	21.80	74.3	22.05	76.5	22.30
	39	60.2	19.12	66.8	22.02	69.0	22.27	70.2	22.41	71.2	22.54	73.4	22.79	75.6	23.07
	41	56.9	21.27	65.5	25.90	67.6	26.21	68.8	24.26	69.8	24.39	71.9	24.68	74.1	24.93
	43	53.7	22.18	64.3	27.00	66.3	27.63	67.5	25.78	68.4	25.32	70.5	25.30	72.7	25.56
	44	52.9	23.13	62.1	28.16	64.4	29.13	65.9	27.40	67.0	26.28	69.2	25.95	71.5	26.22
	47	49.9	30.77	60.0	37.47	62.3	30.58	63.6	27.82	64.6	27.96	66.9	27.87	69.2	28.16
	50	45.7	30.22	53.8	36.79	55.6	32.25	56.7	30.12	57.6	29.86	59.7	29.78	62.2	29.45
	52	29.2	17.88	39.3	22.26	48.6	25.05	53.5	26.30	53.8	25.44	55.1	25.09	58.2	25.77
120%	-5	55.5	8.07	66.0	10.44	76.8	11.10	82.2	11.16	86.4	11.22	88.4	11.33	90.4	11.45
	0	55.5	8.09	66.0	10.46	76.8	11.12	82.2	11.18	86.4	11.24	88.4	11.36	90.4	11.47
	4	55.5	8.12	66.0	10.50	76.8	11.16	82.2	11.22	86.4	11.28	88.4	11.40	90.4	11.52
	7	55.5	8.27	66.0	10.70	76.8	11.37	82.2	11.43	86.4	11.49	88.4	11.61	90.4	11.73
	10	55.5	8.62	66.0	10.53	76.8	12.52	82.2	13.54	86.1	14.12	88.0	13.57	90.0	13.04
	12	55.5	8.79	66.0	10.72	76.8	12.76	82.2	13.79	84.9	14.04	86.8	13.51	88.8	12.96
	14	55.5	8.95	66.0	10.94	76.8	13.01	82.2	14.06	83.6	13.95	85.8	13.43	87.8	13.51
	16	55.5	9.12	66.0	11.16	76.8	13.26	81.7	14.17	82.7	13.98	84.6	14.12	86.6	14.23
	18	55.5	9.28	66.0	11.38	76.8	13.73	80.5	14.64	81.4	14.70	83.4	14.84	85.6	14.97
	20	55.5	9.48	66.0	11.82	76.8	14.75	79.5	15.36	80.5	15.42	82.4	15.55	84.4	15.69
	21	55.5	9.56	66.0	12.24	76.8	15.28	78.7	15.72	79.7	15.78	81.9	15.91	83.9	16.08
	23	55.5	10.22	66.0	13.12	76.8	16.36	77.8	16.41	78.7	16.49	80.7	16.66	82.7	16.80
	25	55.5	10.91	66.0	14.04	75.6	17.07	76.5	17.13	77.5	17.21	79.7	17.38	81.7	17.54
	27	55.5	11.66	66.0	15.00	74.6	17.76	75.6	17.88	76.5	17.96	78.5	18.12	80.5	18.29
	29	55.5	12.43	66.0	16.02	73.4	18.48	74.3	18.59	75.3	18.68	77.3	18.87	79.5	19.04
	31	55.5	13.26	66.0	17.10	72.4	19.23	73.4	19.31	74.3	19.42	76.3	19.62	78.3	19.81
	33	55.5	14.12	66.0	18.26	71.2	19.95	72.1	20.06	73.1	20.14	75.1	20.36	77.0	20.56
	35	55.5	15.03	66.0	19.45	69.9	20.67	70.9	20.78	72.1	20.89	74.1	21.11	76.1	21.33
	37	55.5	16.00	66.0	20.72	69.0	21.41	69.9	21.52	70.9	21.63	72.9	21.85	74.8	22.10
	39	55.5	17.02	65.8	21.88	67.7	22.13	68.7	22.27	69.7	22.38	71.9	22.63	73.9	22.85
	41	52.5	18.94	62.7	24.51	66.5	26.04	67.4	24.10	68.6	24.23	70.5	24.49	72.5	24.74
	43	49.6	19.74	59.8	25.55	65.2	27.44	66.1	25.61	67.5	25.15	69.2	25.11	71.1	25.38
	44	48.9	20.59	59.4	26.65	63.3	28.93	64.5	27.22	65.9	26.11	67.9	25.75	70.0	26.02
	47	46.1	27.40	57.4	35.46	61.2	30.38	62.3	27.63	63.5	27.78	65.6	27.65	67.7	27.94
	50	42.2	26.90	51.5	34.82	54.6	32.03	55.5	29.92	56.6	29.66	58.5	29.55	60.8	29.22
	52	28.6	17.77	38.5	22.12	47.6	24.89	52.4	26.13	52.7	25.27	54.0	24.93	57.0	25.60

GMV X DC Inverter VRF Units

TC—Total capacity of outdoor unit; PI—Power input of outdoor unit															
Connection ratio	Outdoor air temp. (℃ DB)	Indoor air temp.													
		14.0℃ WB		17.0℃ WB		18.0℃ WB		19.0℃ WB		20.0℃ WB		22.0℃ WB		24.0℃ WB	
		20.0℃ DB		24.0℃ DB		26.0℃ DB		27.0℃ DB		28.0℃ DB		30.0℃ DB		32.0℃ DB	
		TC	PI	TC	PI	TC	PI	TC	PI	TC	PI	TC	PI	TC	PI
		kW	kW	kW	kW	kW	kW	kW	kW	kW	kW	kW	kW	kW	kW
110%	-5	50.9	7.14	60.7	9.18	70.4	11.02	75.3	11.08	80.2	11.14	86.4	11.25	88.2	11.35
	0	50.9	7.15	60.7	9.20	70.4	11.04	75.3	11.10	80.2	11.16	86.4	11.27	88.2	11.37
	4	50.9	7.18	60.7	9.23	70.4	11.08	75.3	11.14	80.2	11.20	86.4	11.31	88.2	11.41
	7	50.9	7.31	60.7	9.41	70.4	11.29	75.3	11.35	80.2	11.41	86.4	11.52	88.2	11.62
	10	50.9	7.82	60.7	9.53	70.4	11.33	75.3	12.24	80.2	13.18	86.3	13.98	88.3	13.51
	12	50.9	7.98	60.7	9.73	70.4	11.55	75.3	12.49	80.2	13.43	85.4	13.92	87.1	13.43
	14	50.9	8.12	60.7	9.89	70.4	11.77	75.3	12.71	80.2	13.68	84.1	13.92	86.1	13.40
	16	50.9	8.26	60.7	10.08	70.4	11.99	75.3	12.96	80.2	13.95	83.2	14.01	84.9	14.15
	18	50.9	8.43	60.7	10.28	70.4	12.24	75.3	13.32	80.2	14.62	81.9	14.73	83.9	14.86
	20	50.9	8.59	60.7	10.50	70.4	12.96	75.3	14.31	79.0	15.33	80.9	15.44	82.7	15.58
	21	50.9	8.68	60.7	10.80	70.4	13.43	75.3	14.84	78.5	15.69	80.2	15.80	82.2	15.94
	23	50.9	9.09	60.7	11.58	70.4	14.39	75.3	15.91	77.3	16.38	79.2	16.55	80.9	16.69
	25	50.9	9.67	60.7	12.38	70.4	15.39	75.3	17.05	76.3	17.10	78.0	17.27	80.0	17.41
	27	50.9	10.33	60.7	13.23	70.4	16.47	74.1	17.76	75.1	17.82	77.0	17.99	78.7	18.15
	29	50.9	11.02	60.7	14.12	70.4	17.60	73.1	18.48	74.1	18.57	75.8	18.73	77.8	18.90
	31	50.9	11.74	60.7	15.06	70.4	18.79	71.9	19.20	72.9	19.28	74.8	19.45	76.5	19.64
	33	50.9	12.49	60.7	16.05	69.9	19.81	70.9	19.92	71.9	20.00	73.6	20.20	75.6	20.39
	35	50.9	13.29	60.7	17.10	69.0	20.53	69.7	20.64	70.7	20.75	72.4	20.94	74.3	21.14
	37	50.9	14.15	60.7	18.21	67.7	21.27	68.7	21.36	69.5	21.47	71.4	21.69	73.1	21.88
	39	50.9	15.03	60.7	19.39	66.5	21.99	67.5	22.10	68.5	22.21	70.2	22.43	72.1	22.65
	41	48.1	16.74	57.6	21.55	65.5	25.86	66.2	23.94	67.2	24.07	68.9	24.29	70.9	24.52
	43	45.4	17.46	54.7	22.47	64.6	27.26	65.0	25.45	66.0	24.99	67.7	24.91	69.6	25.13
	44	44.8	18.21	54.6	23.43	62.4	28.74	63.4	27.04	64.5	25.94	66.3	25.55	68.4	25.79
	47	42.2	24.23	52.8	31.18	60.3	30.18	61.2	27.45	62.2	27.60	64.1	27.43	66.2	27.69
	50	38.7	23.79	47.3	30.61	53.9	31.82	54.6	29.72	55.5	29.46	57.2	29.32	59.5	28.96
	52	28.1	17.65	37.8	21.97	46.8	24.72	51.5	25.96	51.8	25.10	53.0	24.76	56.0	25.43
100%	-5	46.2	6.24	55.0	7.99	64.1	9.96	68.0	11.01	72.9	11.06	81.9	11.16	86.5	11.26
	0	46.2	6.25	55.0	8.00	64.1	9.98	68.0	11.03	72.9	11.08	81.9	11.18	86.5	11.28
	4	46.2	6.28	55.0	8.03	64.1	10.02	68.0	11.07	72.9	11.13	81.9	11.23	86.5	11.33
	7	46.2	6.39	55.0	8.18	64.1	10.20	68.0	11.28	72.9	11.33	81.9	11.43	86.5	11.54
	10	46.2	7.07	55.0	8.59	64.1	10.16	68.0	10.97	72.9	11.85	81.9	13.41	86.6	13.94
	12	46.2	7.17	55.0	8.71	64.1	10.30	68.0	11.12	72.9	12.08	81.9	13.64	85.3	13.83
	14	46.2	7.29	55.0	8.86	64.1	10.48	68.0	11.32	72.9	12.30	81.9	13.88	84.4	13.72
	16	46.2	7.45	55.0	9.06	64.1	10.71	68.0	11.58	72.9	12.58	81.6	14.19	83.1	14.03
	18	46.2	7.62	55.0	9.26	64.1	10.92	68.0	11.80	72.9	12.82	80.5	14.47	82.2	14.69
	20	46.2	7.74	55.0	9.40	64.1	11.28	68.0	12.42	72.9	13.64	79.2	15.23	80.9	15.46
	21	46.2	7.82	55.0	9.50	64.1	11.66	68.0	12.85	72.9	14.11	78.7	15.75	80.5	15.89
	23	46.2	8.02	55.0	10.15	64.1	12.54	68.0	13.81	72.9	15.17	77.8	16.66	79.2	16.81
	25	46.2	8.53	55.0	10.79	64.1	13.34	68.0	14.69	72.9	16.22	76.5	17.27	78.3	17.42
	27	46.2	9.11	55.0	11.53	64.1	14.32	68.0	15.77	72.9	17.40	75.3	17.88	77.0	18.04
	29	46.2	9.65	55.0	12.32	64.1	15.31	68.0	16.86	72.6	18.44	74.3	18.74	76.0	18.91
	31	46.2	10.27	55.0	13.12	64.1	16.32	68.0	18.17	71.7	19.19	72.6	19.50	74.8	19.67
	33	46.2	10.92	55.0	13.97	64.1	17.40	68.0	19.23	70.4	19.88	72.2	20.06	73.8	20.24
	35	46.2	11.62	55.0	14.88	64.1	18.55	68.0	20.50	69.2	20.60	70.9	20.79	72.6	20.98
	37	46.2	12.38	55.0	15.85	64.1	19.76	67.3	21.24	68.3	21.34	69.8	21.49	71.6	21.69
	39	46.2	13.18	55.0	16.88	64.1	21.04	66.3	21.94	66.7	22.05	69.0	22.20	69.8	22.40
	41	43.7	14.64	52.3	18.75	60.9	23.38	65.1	23.78	65.8	23.90	67.5	24.11	69.2	24.33
	43	41.3	15.27	49.7	19.56	59.4	24.64	63.9	25.27	65.0	24.81	66.0	24.73	68.5	24.95
	44	40.7	15.92	49.5	20.38	58.0	25.97	62.3	26.86	63.2	25.75	64.9	25.36	66.8	25.59
	47	38.4	21.18	47.9	27.12	56.1	27.27	60.1	27.27	60.9	27.40	62.7	27.23	64.6	27.48
	50	35.1	20.80	42.9	26.63	50.0	28.76	53.6	29.52	54.3	29.26	56.0	29.10	58.1	28.74
	52	27.6	16.07	37.2	20.00	46.0	22.51	50.6	23.63	50.9	22.85	52.1	22.54	55.0	23.15

TC—Total capacity of outdoor unit; PI—Power input of outdoor unit															
Connection ratio	Outdoor air temp. (℃ DB)	Indoor air temp.													
		14.0℃ WB		17.0℃ WB		18.0℃ WB		19.0℃ WB		20.0℃ WB		22.0℃ WB		24.0℃ WB	
		20.0℃ DB		24.0℃ DB		26.0℃ DB		27.0℃ DB		28.0℃ DB		30.0℃ DB		32.0℃ DB	
		TC	PI	TC	PI	TC	PI	TC	PI	TC	PI	TC	PI	TC	PI
		kW	kW	kW	kW	kW	kW	kW	kW	kW	kW	kW	kW	kW	kW
90%	-5	41.6	5.44	49.5	6.89	57.7	8.51	61.6	9.40	65.5	10.34	73.6	11.07	81.7	11.16
	0	41.6	5.45	49.5	6.90	57.7	8.52	61.6	9.42	65.5	10.36	73.6	11.09	81.7	11.19
	4	41.6	5.47	49.5	6.93	57.7	8.56	61.6	9.45	65.5	10.40	73.6	11.13	81.7	11.23
	7	41.6	5.58	49.5	7.06	57.7	8.71	61.6	9.63	65.5	10.59	73.6	11.33	81.7	11.44
	10	41.6	6.17	49.5	7.41	57.7	8.68	61.6	9.78	65.6	10.41	73.7	11.93	81.7	13.51
	12	41.6	6.25	49.5	7.51	57.7	8.79	61.6	9.91	65.6	10.61	73.7	12.13	81.7	13.69
	14	41.6	6.36	49.5	7.64	57.7	8.95	61.6	10.06	65.6	10.80	73.7	12.34	81.7	13.91
	16	41.6	6.50	49.5	7.81	57.7	9.15	61.6	10.28	65.6	11.04	73.7	12.62	81.4	14.18
	18	41.6	6.65	49.5	7.99	57.7	9.32	61.6	10.48	65.6	11.25	73.7	12.92	80.7	14.70
	20	41.6	6.75	49.5	8.11	57.7	9.63	61.6	10.70	65.6	11.72	73.7	13.88	79.2	15.31
	21	41.6	6.82	49.5	8.19	57.7	9.96	61.6	11.05	65.6	12.12	73.7	14.35	78.7	15.65
	23	41.6	6.99	49.5	8.75	57.7	10.71	61.6	11.89	65.6	12.98	73.7	15.41	77.5	16.46
	25	41.6	7.44	49.5	9.31	57.7	11.39	61.6	12.69	65.6	13.88	73.7	16.48	76.5	17.13
	27	41.6	7.95	49.5	9.95	57.7	12.23	61.6	13.54	65.6	14.86	73.7	17.59	75.3	17.88
	29	41.6	8.42	49.5	10.63	57.7	13.08	61.6	14.46	65.6	15.86	72.9	18.44	74.3	18.61
	31	41.6	8.96	49.5	11.32	57.7	13.94	61.6	15.44	65.6	16.93	71.7	19.11	73.1	19.36
	33	41.6	9.53	49.5	12.05	57.7	14.86	61.6	16.42	65.6	18.01	70.7	19.88	72.1	20.06
	35	41.6	10.14	49.5	12.83	57.7	15.84	61.6	17.51	65.6	19.26	69.5	20.61	70.9	20.79
	37	41.6	10.80	49.5	13.67	57.7	16.87	60.5	18.14	65.6	20.61	68.2	21.35	69.9	21.29
	39	41.6	11.50	49.5	14.56	57.7	17.97	59.7	18.74	65.6	21.84	67.3	22.14	68.7	22.08
	41	39.3	12.77	47.0	16.17	54.8	19.96	58.6	20.31	62.4	22.34	66.1	23.90	67.6	24.12
	43	37.1	13.32	44.7	16.85	53.3	21.05	57.5	21.58	61.1	23.19	65.0	24.51	66.5	24.78
	44	36.6	13.89	44.6	17.58	52.2	22.18	56.1	22.93	59.9	24.07	63.6	25.14	65.2	25.37
	47	34.5	18.48	43.1	23.40	50.5	23.29	54.1	23.28	57.7	25.61	61.5	26.99	63.1	27.24
	50	31.6	18.15	38.6	22.97	45.0	24.56	48.3	25.21	51.5	27.35	54.9	28.85	56.7	28.48
	52	24.9	14.98	33.5	18.65	41.4	20.98	45.6	22.03	45.8	21.30	47.4	21.02	49.5	21.58
80%	-5	37.0	4.70	44.0	5.80	51.3	7.21	54.8	7.94	58.2	8.68	65.5	10.30	72.6	11.03
	0	37.0	4.71	44.0	5.81	51.3	7.22	54.8	7.95	58.2	8.69	65.5	10.32	72.6	11.05
	4	37.0	4.73	44.0	5.83	51.3	7.25	54.8	7.98	58.2	8.72	65.5	10.36	72.6	11.09
	7	37.0	4.82	44.0	5.94	51.3	7.38	54.8	8.13	58.2	8.89	65.5	10.55	72.6	11.30
	10	37.0	5.61	44.0	6.71	51.3	7.90	54.8	8.51	58.3	9.11	65.5	10.41	72.6	12.09
	12	37.0	5.69	44.0	6.82	51.3	8.04	54.8	8.68	58.3	9.29	65.5	10.59	72.6	11.99
	14	37.0	5.80	44.0	6.96	51.3	8.18	54.8	8.81	58.3	9.46	65.5	10.77	72.6	12.26
	16	37.0	5.88	44.0	7.07	51.3	8.34	54.8	8.98	58.3	9.60	65.5	11.02	72.6	12.71
	18	37.0	6.00	44.0	7.21	51.3	8.53	54.8	9.17	58.3	9.79	65.5	11.26	72.6	13.59
	20	37.0	6.11	44.0	7.35	51.3	8.68	54.8	9.34	58.3	10.01	65.5	11.67	72.6	14.08
	21	37.0	6.16	44.0	7.40	51.3	8.76	54.8	9.45	58.3	10.23	65.5	12.10	72.6	15.08
	23	37.0	6.27	44.0	7.57	51.3	9.17	54.8	10.06	58.3	10.94	65.5	12.94	72.6	16.13
	25	37.0	6.46	44.0	8.04	51.3	9.81	54.8	10.75	58.3	11.68	65.5	13.85	72.6	17.21
	27	37.0	6.88	44.0	8.56	51.3	10.44	54.8	11.47	58.3	12.53	65.5	14.78	72.6	17.82
	29	37.0	7.32	44.0	9.12	51.3	11.13	54.8	12.21	58.1	13.36	65.5	15.78	72.6	18.46
	31	37.0	7.76	44.0	9.70	51.3	11.85	54.8	13.01	58.1	14.24	65.5	16.84	71.4	19.13
	33	37.0	8.26	44.0	10.80	51.3	12.63	54.8	13.86	58.1	15.17	65.5	17.97	70.4	19.83
	35	37.0	8.76	44.0	10.80	51.3	13.43	54.8	14.78	58.1	16.16	65.5	19.18	69.2	20.54
	37	37.0	9.28	44.0	11.63	51.3	14.28	53.8	15.74	58.1	17.21	65.5	20.42	68.2	21.31
	39	37.0	9.84	44.0	12.35	51.3	15.20	53.1	16.76	58.1	18.32	65.5	21.75	67.0	22.09
	41	34.9	11.04	41.8	13.61	48.7	16.92	52.1	17.15	55.3	18.74	62.4	22.24	66.0	23.83
	43	33.0	11.50	40.6	14.20	47.4	17.82	51.1	18.23	54.0	19.45	61.1	22.81	64.9	24.44
	44	32.5	12.00	39.6	14.80	46.4	18.80	49.9	19.36	53.1	20.19	60.0	23.39	63.7	25.06
	47	30.7	15.97	38.3	19.69	44.9	19.74	48.1	19.66	51.1	21.49	58.0	25.12	61.6	26.91
	50	28.1	15.68	34.3	19.34	40.0	20.81	42.9	21.28	45.6	22.94	51.8	26.85	55.4	28.15
	52	22.1	12.64	29.7	15.74	36.8	17.71	40.5	18.59	40.7	17.98	41.7	17.73	44.0	18.21

GMV X DC Inverter VRF Units

TC—Total capacity of outdoor unit; PI—Power input of outdoor unit															
Connection ratio	Outdoor air temp. (℃ DB)	Indoor air temp.													
		14.0℃ WB		17.0℃ WB		18.0℃ WB		19.0℃ WB		20.0℃ WB		22.0℃ WB		24.0℃ WB	
		20.0℃ DB		24.0℃ DB		26.0℃ DB		27.0℃ DB		28.0℃ DB		30.0℃ DB		32.0℃ DB	
		TC	PI	TC	PI	TC	PI	TC	PI	TC	PI	TC	PI	TC	PI
		kW	kW	kW	kW	kW	kW	kW	kW	kW	kW	kW	kW	kW	kW
70%	-5	32.4	4.01	38.5	4.96	44.9	6.01	47.9	6.59	51.1	7.18	57.2	8.46	63.6	9.84
	0	32.4	4.01	38.5	4.96	44.9	6.02	47.9	6.60	51.1	7.19	57.2	8.47	63.6	9.85
	4	32.4	4.03	38.5	4.98	44.9	6.04	47.9	6.62	51.1	7.22	57.2	8.50	63.6	9.89
	7	32.4	4.10	38.5	5.08	44.9	6.15	47.9	6.75	51.1	7.35	57.2	8.66	63.6	10.07
	10	32.4	4.95	38.5	5.86	44.9	6.82	47.9	7.35	51.0	7.87	57.3	8.95	63.6	10.06
	12	32.4	5.00	38.5	5.94	44.9	6.96	47.9	7.49	51.0	8.01	57.3	9.12	63.6	10.25
	14	32.4	5.08	38.5	6.05	44.9	7.07	47.9	7.60	51.0	8.15	57.3	9.28	63.6	10.44
	16	32.4	5.17	38.5	6.16	44.9	7.21	47.9	7.76	51.0	8.32	57.3	9.45	63.6	10.64
	18	32.4	5.25	38.5	6.27	44.9	7.35	47.9	7.90	51.0	8.45	57.3	9.64	63.6	10.86
	20	32.4	5.33	38.5	6.38	44.9	7.49	47.9	8.04	51.0	8.62	57.3	9.84	63.6	11.16
	21	32.4	5.39	38.5	6.44	44.9	7.54	47.9	8.12	51.0	8.70	57.3	9.95	63.6	11.55
	23	32.4	5.47	38.5	6.55	44.9	7.71	47.9	8.40	51.0	9.14	57.3	10.69	63.6	12.38
	25	32.4	5.58	38.5	6.82	44.9	8.21	47.9	8.98	51.0	9.75	57.3	11.44	63.6	13.23
	27	32.4	5.91	38.5	7.27	44.9	8.76	47.9	9.56	51.0	10.42	57.3	12.21	63.6	14.15
	29	32.4	6.27	38.5	7.71	44.9	9.31	47.9	10.19	51.0	11.08	57.3	13.01	63.6	15.11
	31	32.4	6.63	38.5	8.18	44.9	9.92	47.9	10.83	51.0	11.80	57.3	13.87	63.6	16.11
	33	32.4	7.05	38.5	8.70	44.9	10.55	47.9	11.52	51.0	12.57	57.3	14.78	63.6	17.18
	35	32.4	7.46	38.5	9.23	44.9	11.19	47.9	12.27	51.0	13.37	57.3	15.75	63.6	18.32
	37	32.4	7.87	38.5	9.78	44.9	11.91	47.1	13.04	51.0	14.23	57.3	16.77	63.6	19.51
	39	32.4	8.34	38.5	10.36	44.9	12.63	46.4	13.84	51.0	15.11	57.3	17.82	63.6	20.78
	41	30.6	9.40	36.6	11.63	42.6	14.10	45.6	14.23	48.5	15.51	54.6	18.27	60.6	21.25
	43	28.9	9.80	35.5	12.13	41.1	14.86	44.7	15.13	46.1	16.09	53.6	18.73	58.9	21.79
	44	28.5	10.22	34.7	12.64	40.6	15.67	43.6	16.07	46.6	16.71	52.5	19.21	58.5	22.35
	47	26.9	13.60	33.5	16.82	39.2	16.45	42.1	16.31	44.9	17.78	50.7	20.63	56.6	24.00
	50	24.6	13.35	30.0	16.52	35.0	17.34	37.5	17.66	40.0	18.99	45.3	22.05	50.9	25.09
	52	19.3	10.49	26.0	13.06	32.2	14.56	35.4	15.43	35.6	14.92	36.5	14.72	38.5	15.11
60%	-5	27.7	3.37	33.0	4.11	38.4	4.93	41.1	5.37	43.8	5.83	49.2	6.81	54.5	7.86
	0	27.7	3.37	33.0	4.12	38.4	4.93	41.1	5.38	43.8	5.84	49.2	6.82	54.5	7.88
	4	27.7	3.39	33.0	4.13	38.4	4.95	41.1	5.40	43.8	5.86	49.2	6.85	54.5	7.91
	7	27.7	3.45	33.0	4.21	38.4	5.04	41.1	5.50	43.8	5.97	49.2	6.97	54.5	8.05
	10	27.7	4.28	33.0	5.03	38.4	5.83	41.1	6.24	43.7	6.66	49.1	7.54	54.5	8.45
	12	27.7	4.37	33.0	5.11	38.4	5.94	41.1	6.35	43.7	6.77	49.1	7.68	54.5	8.59
	14	27.7	4.42	33.0	5.19	38.4	6.02	41.1	6.46	43.7	6.91	49.1	7.82	54.5	8.76
	16	27.7	4.48	33.0	5.28	38.4	6.13	41.1	6.58	43.7	7.02	49.1	7.96	54.5	8.92
	18	27.7	4.56	33.0	5.36	38.4	6.24	41.1	6.69	43.7	7.16	49.1	8.10	54.5	9.09
	20	27.7	4.61	33.0	5.47	38.4	6.35	41.1	6.82	43.7	7.29	49.1	8.26	54.5	9.28
	21	27.7	4.67	33.0	5.50	38.4	6.41	41.1	6.88	43.7	7.35	49.1	8.34	54.5	9.37
	23	27.7	4.72	33.0	5.61	38.4	6.52	41.1	7.02	43.7	7.49	49.1	8.68	54.5	9.97
	25	27.7	4.81	33.0	5.72	38.4	6.77	41.1	7.35	43.7	7.96	49.1	9.26	54.5	10.64
	27	27.7	5.00	33.0	6.05	38.4	7.21	41.1	7.85	43.7	8.48	49.1	9.86	54.5	11.36
	29	27.7	5.28	33.0	6.41	38.4	7.68	41.1	8.34	43.7	9.03	49.1	10.53	54.5	12.13
	31	27.7	5.61	33.0	6.82	38.4	8.15	41.1	8.87	43.7	9.61	49.1	11.19	54.5	12.90
	33	27.7	5.91	33.0	7.21	38.4	8.65	41.1	9.42	43.7	10.22	49.1	11.91	54.5	13.76
	35	27.7	6.27	33.0	7.65	38.4	9.17	41.1	10.00	43.7	10.86	49.1	12.68	54.5	14.64
	37	27.7	6.63	33.0	8.10	38.4	9.73	40.4	10.61	43.7	11.52	49.1	13.48	54.5	15.58
	39	27.7	6.99	33.0	8.56	38.4	10.31	39.8	11.24	43.7	12.24	49.1	14.31	54.5	16.58
	41	26.2	7.90	31.4	9.64	36.5	11.56	39.1	11.60	41.6	12.60	46.8	14.71	52.0	16.99
	43	24.8	8.24	29.8	10.05	35.5	12.18	38.3	12.33	40.4	13.07	46.2	15.08	50.9	17.43
	44	24.4	8.59	29.7	10.48	34.8	12.84	37.4	13.10	39.9	13.57	45.0	15.47	50.2	17.86
	47	23.0	11.43	28.7	13.95	33.6	13.48	36.1	13.30	38.5	14.44	43.5	16.61	48.5	19.18
	50	21.1	11.23	25.8	13.70	30.0	14.22	32.2	14.40	34.3	15.42	38.8	17.75	43.6	20.06
	52	16.6	8.55	22.3	10.65	27.6	11.98	30.4	12.58	30.5	12.16	31.3	12.00	33.0	12.32

TC—Total capacity of outdoor unit; PI—Power input of outdoor unit															
Connection ratio	Outdoor air temp. (℃ DB)	Indoor air temp.													
		14.0℃ WB		17.0℃ WB		18.0℃ WB		19.0℃ WB		20.0℃ WB		22.0℃ WB		24.0℃ WB	
		20.0℃ DB		24.0℃ DB		26.0℃ DB		27.0℃ DB		28.0℃ DB		30.0℃ DB		32.0℃ DB	
		TC	PI	TC	PI	TC	PI	TC	PI	TC	PI	TC	PI	TC	PI
		kW	kW	kW	kW	kW	kW	kW	kW	kW	kW	kW	kW	kW	kW
50%	-5	23.1	2.79	27.5	3.34	32.0	3.95	34.2	4.27	36.4	4.61	40.9	5.34	45.5	6.11
	0	23.1	2.79	27.5	3.34	32.0	3.95	34.2	4.28	36.4	4.62	40.9	5.35	45.5	6.12
	4	23.1	2.80	27.5	3.36	32.0	3.97	34.2	4.30	36.4	4.64	40.9	5.37	45.5	6.15
	7	23.1	2.86	27.5	3.42	32.0	4.04	34.2	4.38	36.4	4.73	40.9	5.47	45.5	6.26
	10	23.1	3.70	27.5	4.28	32.0	4.89	34.2	5.22	36.4	5.53	40.9	6.22	45.5	6.93
	12	23.1	3.73	27.5	4.34	32.0	4.97	34.2	5.28	36.4	5.64	40.9	6.33	45.5	7.05
	14	23.1	3.79	27.5	4.39	32.0	5.03	34.2	5.39	36.4	5.72	40.9	6.44	45.5	7.18
	16	23.1	3.84	27.5	4.45	32.0	5.11	34.2	5.47	36.4	5.80	40.9	6.55	45.5	7.29
	18	23.1	3.90	27.5	4.53	32.0	5.19	34.2	5.55	36.4	5.91	40.9	6.66	45.5	7.43
	20	23.1	3.95	27.5	4.59	32.0	5.28	34.2	5.66	36.4	6.02	40.9	6.80	45.5	7.57
	21	23.1	3.98	27.5	4.64	32.0	5.33	34.2	5.69	36.4	6.08	40.9	6.85	45.5	7.65
	23	23.1	4.03	27.5	4.70	32.0	5.42	34.2	5.80	36.4	6.19	40.9	6.96	45.5	7.82
	25	23.1	4.09	27.5	4.78	32.0	5.53	34.2	5.91	36.4	6.38	40.9	7.32	45.5	8.34
	27	23.1	4.17	27.5	4.97	32.0	5.83	34.2	6.30	36.4	6.77	40.9	7.79	45.5	8.90
	29	23.1	4.39	27.5	5.25	32.0	6.19	34.2	6.69	36.3	7.21	40.9	8.29	45.5	9.48
	31	23.1	4.64	27.5	5.55	32.0	6.60	34.2	7.10	36.3	7.65	40.9	8.81	45.5	10.08
	33	23.1	4.92	27.5	5.88	32.0	6.96	34.2	7.51	36.3	8.12	40.9	9.37	45.5	10.72
	35	23.1	5.19	27.5	6.22	32.0	7.35	34.2	7.96	36.3	8.59	40.9	9.95	45.5	11.38
	37	23.1	5.47	27.5	6.58	32.0	7.79	33.6	8.43	36.3	9.12	40.9	10.55	45.5	12.10
	39	23.1	5.77	27.5	6.93	32.0	8.23	33.2	8.92	36.3	9.67	40.9	11.19	45.5	12.85
	41	21.8	6.54	26.1	7.83	30.4	9.26	32.5	9.23	34.5	9.97	39.0	11.54	43.4	13.20
	43	20.6	6.83	24.8	8.22	29.6	9.75	31.9	9.89	34.0	10.35	37.9	11.84	42.3	13.55
	44	20.3	7.12	24.8	8.52	29.0	10.29	31.2	10.42	33.2	10.74	37.5	12.13	41.8	13.89
	47	19.2	9.47	23.9	11.33	28.0	10.80	30.1	10.58	32.0	11.43	36.2	13.03	40.5	14.91
	50	17.6	9.30	21.5	11.13	25.0	11.39	26.8	11.46	28.5	12.20	32.3	13.92	36.4	15.59
	52	13.8	6.80	18.6	8.47	23.0	9.53	25.3	10.01	25.4	9.68	26.0	9.55	27.5	9.80

GMV-730WM/B-X(P)

TC—Total capacity of outdoor unit; PI—Power input of outdoor unit															
Connection ratio	Outdoor air temp. (℃ DB)	Indoor air temp.													
		14.0℃ WB		17.0℃ WB		18.0℃ WB		19.0℃ WB		20.0℃ WB		22.0℃ WB		24.0℃ WB	
		20.0℃ DB		24.0℃ DB		26.0℃ DB		27.0℃ DB		28.0℃ DB		30.0℃ DB		32.0℃ DB	
		TC	PI	TC	PI	TC	PI	TC	PI	TC	PI	TC	PI	TC	PI
		kW	kW	kW	kW	kW	kW	kW	kW	kW	kW	kW	kW	kW	kW
135%	-5	64.6	9.51	76.9	11.58	89.3	11.72	92.7	11.78	94.4	11.84	96.8	11.98	99.2	12.11
	0	64.6	9.52	76.9	11.60	89.3	11.74	92.7	11.80	94.4	11.86	96.8	12.00	99.2	12.13
	4	64.6	9.56	76.9	11.64	89.3	11.78	92.7	11.84	94.4	11.91	96.8	12.05	99.2	12.17
	7	64.6	9.74	76.9	11.86	89.3	12.00	92.7	12.06	94.4	12.13	96.8	12.27	99.2	12.40
	10	64.6	9.91	76.9	12.11	89.3	14.40	92.7	14.72	93.7	14.43	96.1	13.82	98.5	13.18
	12	64.6	10.08	76.9	12.34	89.3	14.69	91.4	14.63	92.7	14.34	94.8	13.71	97.1	13.50
	14	64.6	10.29	76.9	12.58	89.0	14.86	90.3	14.57	91.4	14.26	93.7	14.14	96.1	14.29
	16	64.6	10.46	76.9	12.84	88.0	14.81	89.0	14.69	90.1	14.75	92.4	14.89	94.8	15.04
	18	64.6	10.66	76.9	13.10	86.6	15.36	87.7	15.44	89.0	15.53	91.4	15.68	93.7	15.82
	20	64.6	10.89	76.9	13.94	85.3	16.11	86.6	16.20	87.7	16.28	90.1	16.43	92.4	16.60
	21	64.6	11.18	76.9	14.43	84.8	16.49	86.1	16.57	87.2	16.66	89.5	16.83	91.9	16.98
	23	64.6	12.00	76.9	15.47	83.7	17.24	84.8	17.33	85.9	17.41	88.2	17.59	90.6	17.76
	25	64.6	12.81	76.9	16.57	82.4	17.99	83.7	18.08	84.8	18.20	87.2	18.37	89.5	18.54
	27	64.6	13.68	76.9	17.73	81.4	15.85	82.4	18.86	83.5	18.95	85.9	19.15	88.2	19.36
	29	64.6	14.60	76.9	18.95	80.1	19.50	81.1	19.62	82.4	19.73	84.8	19.94	87.2	20.14
	31	64.6	15.59	76.7	20.05	78.8	20.28	80.1	20.40	81.1	20.49	83.5	20.72	85.9	20.95
	33	64.6	16.60	75.3	20.80	77.7	21.01	78.8	21.15	80.1	21.27	82.4	21.50	84.5	21.76
	35	64.6	17.70	74.0	21.56	76.4	21.82	77.7	21.93	78.8	22.05	81.1	22.31	83.5	22.54
	37	64.6	18.83	73.0	22.34	75.3	22.60	76.4	22.72	77.7	22.86	79.8	23.12	82.2	23.38
	39	64.6	20.05	71.7	23.09	74.0	23.35	75.3	23.50	76.4	23.64	78.8	23.90	81.1	24.19
	41	61.0	22.31	70.3	27.16	72.6	27.49	73.9	25.44	74.9	25.58	77.2	25.88	79.6	26.15
	43	57.7	23.26	69.0	28.31	71.2	28.98	72.4	27.04	73.4	26.55	75.7	26.53	78.0	26.81
	44	56.8	24.25	66.6	29.53	69.1	30.55	70.7	28.73	71.9	27.56	74.3	27.22	76.8	27.50
	47	53.6	32.27	64.4	39.30	66.8	32.07	68.2	29.17	69.3	29.33	71.8	29.23	74.3	29.53
	50	49.1	31.69	57.7	38.59	59.7	33.82	60.8	31.59	61.8	31.31	64.1	31.24	66.8	30.88
	52	31.4	18.76	42.2	23.35	52.2	26.28	57.5	27.59	57.7	26.68	59.1	26.32	62.4	27.02
120%	-5	59.6	8.46	70.9	10.95	82.4	11.64	88.2	11.70	92.8	11.76	94.9	11.89	97.0	12.01
	0	59.6	8.48	70.9	10.97	82.4	11.66	88.2	11.72	92.8	11.79	94.9	11.91	97.0	12.03
	4	59.6	8.51	70.9	11.02	82.4	11.70	88.2	11.77	92.8	11.83	94.9	11.95	97.0	12.08
	7	59.6	8.67	70.9	11.22	82.4	11.92	88.2	11.98	92.8	12.05	94.9	12.18	97.0	12.30
	10	59.6	9.04	70.9	11.04	82.4	13.13	88.2	14.20	92.4	14.81	94.5	14.23	96.6	13.68
	12	59.6	9.21	70.9	11.24	82.4	13.39	88.2	14.46	91.1	14.72	93.2	14.17	95.3	13.59
	14	59.6	9.39	70.9	11.47	82.4	13.65	88.2	14.75	89.8	14.63	92.2	14.08	94.3	14.17
	16	59.6	9.56	70.9	11.71	82.4	13.91	87.7	14.86	88.7	14.66	90.8	14.81	92.9	14.92
	18	59.6	9.74	70.9	11.94	82.4	14.40	86.4	15.36	87.4	15.42	89.5	15.56	91.9	15.70
	20	59.6	9.94	70.9	12.40	82.4	15.47	85.3	16.11	86.4	16.17	88.5	16.31	90.6	16.46
	21	59.6	10.03	70.9	12.84	82.4	16.02	84.5	16.49	85.6	16.55	88.0	16.69	90.1	16.86
	23	59.6	10.72	70.9	13.76	82.4	17.15	83.5	17.21	84.5	17.30	86.6	17.47	88.7	17.62
	25	59.6	11.45	70.9	14.72	81.1	17.91	82.2	17.96	83.2	18.05	85.6	18.23	87.7	18.40
	27	59.6	12.23	70.9	15.73	80.1	18.63	81.1	18.75	82.2	18.83	84.3	19.01	86.4	19.18
	29	59.6	13.04	70.9	16.81	78.8	19.38	79.8	19.50	80.9	19.59	83.0	19.79	85.3	19.96
	31	59.6	13.91	70.9	17.94	77.7	20.17	78.8	20.25	79.8	20.37	81.9	20.57	84.0	20.78
	33	59.6	14.81	70.9	19.15	76.4	20.92	77.4	21.04	78.5	21.12	80.6	21.36	82.7	21.56
	35	59.6	15.76	70.9	20.40	75.1	21.67	76.1	21.79	77.4	21.91	79.5	22.14	81.6	22.37
	37	59.6	16.78	70.9	21.73	74.0	22.46	75.1	22.57	76.1	22.69	78.2	22.92	80.3	23.18
	39	59.6	17.85	70.6	22.95	72.7	23.21	73.8	23.35	74.8	23.47	77.2	23.73	79.3	23.96
	41	56.3	19.86	67.3	25.70	71.3	27.31	72.4	25.28	73.7	25.41	75.7	25.68	77.8	25.95
	43	53.2	20.70	64.2	26.79	70.0	28.78	71.0	26.85	72.5	26.38	74.3	26.33	76.4	26.62
	44	52.4	21.60	63.8	27.95	68.0	30.34	69.3	28.54	70.7	27.38	72.9	27.01	75.1	27.29
	47	49.5	28.74	61.7	37.19	65.7	31.86	66.8	28.98	68.2	29.13	70.4	29.00	72.7	29.30
	50	45.3	28.22	55.3	36.51	58.6	33.59	59.6	31.38	60.8	31.11	62.8	30.99	65.3	30.65
	52	30.7	18.63	41.3	23.20	51.1	26.10	56.3	27.41	56.6	26.50	57.9	26.14	61.2	26.84

TC—Total capacity of outdoor unit; PI—Power input of outdoor unit															
Connection ratio	Outdoor air temp. (℃ DB)	Indoor air temp.													
		14.0℃ WB		17.0℃ WB		18.0℃ WB		19.0℃ WB		20.0℃ WB		22.0℃ WB		24.0℃ WB	
		20.0℃ DB		24.0℃ DB		26.0℃ DB		27.0℃ DB		28.0℃ DB		30.0℃ DB		32.0℃ DB	
		TC	PI	TC	PI	TC	PI	TC	PI	TC	PI	TC	PI	TC	PI
		kW	kW	kW	kW	kW	kW	kW	kW	kW	kW	kW	kW	kW	kW
110%	-5	54.6	7.48	65.1	9.63	75.6	11.56	80.9	11.62	86.1	11.69	92.8	11.79	94.7	11.90
	0	54.6	7.50	65.1	9.65	75.6	11.58	80.9	11.64	86.1	11.71	92.8	11.82	94.7	11.93
	4	54.6	7.53	65.1	9.69	75.6	11.63	80.9	11.69	86.1	11.75	92.8	11.86	94.7	11.97
	7	54.6	7.67	65.1	9.86	75.6	11.84	80.9	11.90	86.1	11.97	92.8	12.08	94.7	12.19
	10	54.6	8.20	65.1	10.00	75.6	11.88	80.9	12.84	86.1	13.82	92.7	14.66	94.8	14.17
	12	54.6	8.37	65.1	10.20	75.6	12.11	80.9	13.10	86.1	14.08	91.6	14.60	93.5	14.08
	14	54.6	8.52	65.1	10.37	75.6	12.34	80.9	13.33	86.1	14.34	90.3	14.60	92.4	14.05
	16	54.6	8.66	65.1	10.58	75.6	12.58	80.9	13.59	86.1	14.63	89.3	14.69	91.1	14.84
	18	54.6	8.84	65.1	10.78	75.6	12.84	80.9	13.97	86.1	15.33	88.0	15.44	90.1	15.59
	20	54.6	9.01	65.1	11.01	75.6	13.59	80.9	15.01	84.8	16.08	86.9	16.20	88.7	16.34
	21	54.6	9.10	65.1	11.33	75.6	14.08	80.9	15.56	84.3	16.46	86.1	16.57	88.2	16.72
	23	54.6	9.53	65.1	12.14	75.6	15.10	80.9	16.69	83.0	17.18	85.1	17.36	86.9	17.50
	25	54.6	10.14	65.1	12.98	75.6	16.14	80.9	17.88	81.9	17.94	83.7	18.11	85.9	18.25
	27	54.6	10.84	65.1	13.88	75.6	17.27	79.5	18.63	80.6	18.69	82.7	18.86	84.5	19.04
	29	54.6	11.56	65.1	14.81	75.6	18.46	78.5	19.38	79.5	19.47	81.4	19.65	83.5	19.82
	31	54.6	12.31	65.1	15.79	75.6	19.70	77.2	20.14	78.2	20.23	80.3	20.40	82.2	20.60
	33	54.6	13.10	65.1	16.83	75.1	20.78	76.1	20.89	77.2	20.98	79.0	21.18	81.1	21.38
	35	54.6	13.94	65.1	17.94	74.0	21.53	74.8	21.64	75.9	21.76	77.7	21.96	79.8	22.17
	37	54.6	14.84	65.1	19.10	72.7	22.31	73.8	22.40	74.6	22.51	76.7	22.75	78.5	22.95
	39	54.6	15.76	65.1	20.34	71.4	23.06	72.5	23.18	73.5	23.30	75.3	23.53	77.4	23.76
	41	51.6	17.56	61.9	22.60	70.3	27.13	71.1	25.11	72.2	25.24	74.0	25.48	76.1	25.71
	43	48.8	18.31	58.8	23.57	69.3	28.59	69.8	26.70	70.8	26.20	72.6	26.13	74.7	26.36
	44	48.1	19.09	58.6	24.57	67.0	30.14	68.1	28.35	69.3	27.20	71.2	26.80	73.4	27.04
	47	45.3	25.41	56.6	32.70	64.8	31.65	65.7	28.79	66.8	28.94	68.8	28.77	71.0	29.04
	50	41.5	24.95	50.8	32.11	57.8	33.37	58.6	31.17	59.6	30.90	61.4	30.75	63.8	30.37
	52	30.2	18.51	40.6	23.04	50.2	25.93	55.3	27.22	55.6	26.33	56.9	25.97	60.1	26.67
100%	-5	49.6	6.54	59.1	8.38	68.8	10.45	73.0	11.55	78.2	11.60	88.0	11.71	92.9	11.81
	0	49.6	6.56	59.1	8.40	68.8	10.47	73.0	11.57	78.2	11.62	88.0	11.73	92.9	11.84
	4	49.6	6.58	59.1	8.43	68.8	10.51	73.0	11.61	78.2	11.67	88.0	11.77	92.9	11.88
	7	49.6	6.70	59.1	8.58	68.8	10.70	73.0	11.83	78.2	11.88	88.0	11.99	92.9	12.10
	10	49.6	7.42	59.1	9.01	68.8	10.66	73.0	11.51	78.2	12.43	87.9	14.07	92.9	14.62
	12	49.6	7.52	59.1	9.13	68.8	10.80	73.0	11.66	78.2	12.67	87.9	14.31	91.6	14.50
	14	49.6	7.65	59.1	9.29	68.8	10.99	73.0	11.87	78.2	12.90	87.9	14.56	90.6	14.39
	16	49.6	7.82	59.1	9.50	68.8	11.23	73.0	12.14	78.2	13.19	87.6	14.88	89.2	14.71
	18	49.6	7.99	59.1	9.71	68.8	11.45	73.0	12.38	78.2	13.45	86.4	15.17	88.2	15.40
	20	49.6	8.12	59.1	9.86	68.8	11.83	73.0	13.03	78.2	14.31	85.1	15.97	86.9	16.21
	21	49.6	8.20	59.1	9.96	68.8	12.23	73.0	13.47	78.2	14.79	84.5	16.52	86.4	16.66
	23	49.6	8.41	59.1	10.64	68.8	13.15	73.0	14.49	78.2	15.91	83.5	17.48	85.1	17.63
	25	49.6	8.94	59.1	11.32	68.8	13.99	73.0	15.41	78.2	17.01	82.2	18.11	84.0	18.27
	27	49.6	9.56	59.1	12.09	68.8	15.01	73.0	16.54	78.2	18.25	80.9	18.75	82.7	18.92
	29	49.6	10.12	59.1	12.92	68.8	16.06	73.0	17.69	78.0	19.34	79.8	19.65	81.6	19.83
	31	49.6	10.77	59.1	13.76	68.8	17.12	73.0	19.06	77.0	20.12	77.9	20.45	80.3	20.63
	33	49.6	11.46	59.1	14.65	68.8	18.25	73.0	20.17	75.6	20.85	77.6	21.04	79.2	21.23
	35	49.6	12.19	59.1	15.60	68.8	19.46	73.0	21.50	74.3	21.61	76.1	21.80	77.9	22.00
	37	49.6	12.98	59.1	16.62	68.8	20.72	72.2	22.27	73.4	22.39	75.0	22.54	76.8	22.75
	39	49.6	13.82	59.1	17.70	68.8	22.07	71.2	23.01	71.6	23.12	74.0	23.29	75.0	23.50
	41	46.9	15.36	56.1	19.66	65.4	24.52	69.9	24.94	70.7	25.06	72.4	25.29	74.3	25.52
	43	44.3	16.01	53.3	20.51	63.8	25.84	68.6	26.51	69.7	26.02	70.9	25.94	73.5	26.17
	44	43.7	16.70	53.2	21.38	62.2	27.24	66.9	28.17	67.8	27.01	69.7	26.60	71.7	26.84
	47	41.2	22.22	51.4	28.45	60.2	28.60	64.5	28.60	65.4	28.74	67.3	28.56	69.4	28.82
	50	37.7	21.82	46.1	27.93	53.7	30.16	57.6	30.96	58.3	30.68	60.1	30.52	62.3	30.14
	52	29.7	16.85	39.9	20.98	49.4	23.60	54.3	24.78	54.6	23.97	55.9	23.64	59.1	24.27

GMV X DC Inverter VRF Units

TC—Total capacity of outdoor unit; PI—Power input of outdoor unit															
Connection ratio	Outdoor air temp. (℃ DB)	Indoor air temp.													
		14.0℃ WB		17.0℃ WB		18.0℃ WB		19.0℃ WB		20.0℃ WB		22.0℃ WB		24.0℃ WB	
		20.0℃ DB		24.0℃ DB		26.0℃ DB		27.0℃ DB		28.0℃ DB		30.0℃ DB		32.0℃ DB	
		TC	PI	TC	PI	TC	PI	TC	PI	TC	PI	TC	PI	TC	PI
		kW	kW	kW	kW	kW	kW	kW	kW	kW	kW	kW	kW	kW	kW
90%	-5	44.7	5.71	53.2	7.23	61.9	8.92	66.2	9.86	70.4	10.85	79.0	11.61	87.7	11.71
	0	44.7	5.72	53.2	7.24	61.9	8.94	66.2	9.88	70.4	10.87	79.0	11.63	87.7	11.73
	4	44.7	5.74	53.2	7.27	61.9	8.97	66.2	9.91	70.4	10.91	79.0	11.67	87.7	11.77
	7	44.7	5.85	53.2	7.40	61.9	9.14	66.2	10.10	70.4	11.11	79.0	11.89	87.7	11.99
	10	44.7	6.47	53.2	7.77	61.9	9.10	66.2	10.25	70.4	10.92	79.1	12.51	87.7	14.17
	12	44.7	6.56	53.2	7.88	61.9	9.22	66.2	10.39	70.4	11.13	79.1	12.73	87.7	14.36
	14	44.7	6.67	53.2	8.01	61.9	9.38	66.2	10.55	70.4	11.32	79.1	12.95	87.7	14.59
	16	44.7	6.82	53.2	8.19	61.9	9.59	66.2	10.79	70.4	11.58	79.1	13.24	87.4	14.88
	18	44.7	6.97	53.2	8.38	61.9	9.78	66.2	10.99	70.4	11.80	79.1	13.55	86.6	15.42
	20	44.7	7.08	53.2	8.50	61.9	10.10	66.2	11.22	70.4	12.29	79.1	14.55	85.1	16.06
	21	44.7	7.15	53.2	8.59	61.9	10.45	66.2	11.59	70.4	12.71	79.1	15.05	84.5	16.42
	23	44.7	7.34	53.2	9.18	61.9	11.23	66.2	12.47	70.4	13.61	79.1	16.16	83.2	17.26
	25	44.7	7.80	53.2	9.76	61.9	11.95	66.2	13.30	70.4	14.56	79.1	17.29	82.2	17.97
	27	44.7	8.34	53.2	10.43	61.9	12.82	66.2	14.20	70.4	15.59	79.1	18.45	80.9	18.75
	29	44.7	8.83	53.2	11.14	61.9	13.71	66.2	15.17	70.4	16.63	78.2	19.34	79.8	19.51
	31	44.7	9.40	53.2	11.87	61.9	14.62	66.2	16.19	70.4	17.75	76.9	20.04	78.5	20.31
	33	44.7	10.00	53.2	12.64	61.9	15.59	66.2	17.22	70.4	18.88	75.9	20.85	77.4	21.04
	35	44.7	10.63	53.2	13.46	61.9	16.62	66.2	18.36	70.4	20.20	74.6	21.61	76.1	21.81
	37	44.7	11.32	53.2	14.33	61.9	17.70	65.0	19.02	70.4	21.61	73.2	22.39	75.1	22.33
	39	44.7	12.06	53.2	15.27	61.9	18.85	64.1	19.65	70.4	22.91	72.2	23.22	73.8	23.15
	41	42.2	13.40	50.5	16.96	58.8	20.94	62.9	21.30	67.0	23.43	71.0	25.07	72.6	25.29
	43	39.9	13.97	48.0	17.67	57.2	22.08	61.7	22.63	65.6	24.32	69.8	25.71	71.4	25.98
	44	39.3	14.57	47.8	18.44	56.0	23.26	60.2	24.05	64.3	25.25	68.3	26.37	70.0	26.60
	47	37.1	19.38	46.3	24.54	54.2	24.43	58.1	24.42	62.0	26.86	66.0	28.31	67.8	28.57
	50	33.9	19.03	41.5	24.09	48.3	25.76	51.8	26.44	55.3	28.68	58.9	30.26	60.9	29.87
	52	26.7	15.71	35.9	19.56	44.4	22.01	48.9	23.11	49.1	22.34	50.9	22.04	53.2	22.63
80%	-5	39.7	4.93	47.3	6.08	55.0	7.56	58.8	8.32	62.5	9.10	70.4	10.80	78.0	11.57
	0	39.7	4.94	47.3	6.10	55.0	7.58	58.8	8.34	62.5	9.12	70.4	10.82	78.0	11.59
	4	39.7	4.96	47.3	6.12	55.0	7.60	58.8	8.37	62.5	9.15	70.4	10.86	78.0	11.64
	7	39.7	5.05	47.3	6.23	55.0	7.75	58.8	8.53	62.5	9.32	70.4	11.06	78.0	11.85
	10	39.7	5.88	47.3	7.04	55.0	8.29	58.8	8.92	62.6	9.56	70.3	10.92	78.0	12.68
	12	39.7	5.97	47.3	7.16	55.0	8.43	58.8	9.10	62.6	9.74	70.3	11.11	78.0	12.58
	14	39.7	6.08	47.3	7.30	55.0	8.58	58.8	9.24	62.6	9.92	70.3	11.30	78.0	12.86
	16	39.7	6.17	47.3	7.42	55.0	8.75	58.8	9.42	62.6	10.07	70.3	11.55	78.0	13.33
	18	39.7	6.29	47.3	7.56	55.0	8.95	58.8	9.62	62.6	10.27	70.3	11.81	78.0	14.25
	20	39.7	6.40	47.3	7.71	55.0	9.10	58.8	9.79	62.6	10.50	70.3	12.24	78.0	14.77
	21	39.7	6.46	47.3	7.77	55.0	9.19	58.8	9.91	62.6	10.73	70.3	12.69	78.0	15.81
	23	39.7	6.58	47.3	7.94	55.0	9.62	58.8	10.55	62.6	11.48	70.3	13.57	78.0	16.91
	25	39.7	6.78	47.3	8.43	55.0	10.29	58.8	11.27	62.6	12.25	70.3	14.53	78.0	18.05
	27	39.7	7.21	47.3	8.98	55.0	10.95	58.8	12.02	62.6	13.14	70.3	15.50	78.0	18.69
	29	39.7	7.68	47.3	9.56	55.0	11.68	58.8	12.81	62.4	14.01	70.3	16.54	78.0	19.36
	31	39.7	8.14	47.3	10.17	55.0	12.43	58.8	13.65	62.4	14.94	70.3	17.66	76.7	20.07
	33	39.7	8.66	47.3	11.33	55.0	13.24	58.8	14.54	62.4	15.91	70.3	18.84	75.6	20.79
	35	39.7	9.19	47.3	11.33	55.0	14.08	58.8	15.50	62.4	16.94	70.3	20.11	74.3	21.55
	37	39.7	9.74	47.3	12.20	55.0	14.98	57.8	16.51	62.4	18.04	70.3	21.42	73.2	22.34
	39	39.7	10.32	47.3	12.95	55.0	15.94	57.0	17.58	62.4	19.22	70.3	22.81	71.9	23.17
	41	37.5	11.57	44.9	14.28	52.3	17.74	55.9	17.98	59.3	19.65	67.0	23.33	70.8	24.99
	43	35.4	12.06	43.6	14.89	50.9	18.69	54.8	19.12	58.0	20.40	65.6	23.93	69.7	25.64
	44	34.9	12.58	42.5	15.52	49.8	19.72	53.5	20.31	57.0	21.18	64.4	24.54	68.4	26.29
	47	32.9	16.74	41.1	20.65	48.1	20.70	51.6	20.62	54.9	22.53	62.2	26.35	66.1	28.23
	50	30.2	16.44	36.9	20.28	43.0	21.83	46.0	22.32	49.0	24.06	55.6	28.16	59.4	29.52
	52	23.7	13.26	31.9	16.50	39.5	18.57	43.5	19.50	43.7	18.85	44.7	18.60	47.3	19.10

TC—Total capacity of outdoor unit; PI—Power input of outdoor unit															
Connection ratio	Outdoor air temp. (℃ DB)	Indoor air temp.													
		14.0℃ WB		17.0℃ WB		18.0℃ WB		19.0℃ WB		20.0℃ WB		22.0℃ WB		24.0℃ WB	
		20.0℃ DB		24.0℃ DB		26.0℃ DB		27.0℃ DB		28.0℃ DB		30.0℃ DB		32.0℃ DB	
		TC	PI	TC	PI	TC	PI	TC	PI	TC	PI	TC	PI	TC	PI
		kW	kW	kW	kW	kW	kW	kW	kW	kW	kW	kW	kW	kW	kW
70%	-5	34.7	4.20	41.3	5.20	48.1	6.30	51.5	6.91	54.9	7.53	61.4	8.87	68.3	10.32
	0	34.7	4.21	41.3	5.21	48.1	6.31	51.5	6.92	54.9	7.55	61.4	8.89	68.3	10.34
	4	34.7	4.22	41.3	5.23	48.1	6.34	51.5	6.95	54.9	7.57	61.4	8.92	68.3	10.37
	7	34.7	4.30	41.3	5.32	48.1	6.45	51.5	7.08	54.9	7.71	61.4	9.08	68.3	10.57
	10	34.7	5.19	41.3	6.14	48.1	7.16	51.5	7.71	54.8	8.26	61.5	9.39	68.3	10.55
	12	34.7	5.24	41.3	6.23	48.1	7.30	51.5	7.85	54.8	8.40	61.5	9.56	68.3	10.75
	14	34.7	5.33	41.3	6.35	48.1	7.42	51.5	7.97	54.8	8.55	61.5	9.74	68.3	10.95
	16	34.7	5.42	41.3	6.46	48.1	7.56	51.5	8.14	54.8	8.72	61.5	9.91	68.3	11.16
	18	34.7	5.51	41.3	6.58	48.1	7.71	51.5	8.29	54.8	8.87	61.5	10.11	68.3	11.39
	20	34.7	5.59	41.3	6.69	48.1	7.85	51.5	8.43	54.8	9.04	61.5	10.32	68.3	11.71
	21	34.7	5.65	41.3	6.75	48.1	7.91	51.5	8.52	54.8	9.13	61.5	10.43	68.3	12.11
	23	34.7	5.74	41.3	6.87	48.1	8.08	51.5	8.81	54.8	9.59	61.5	11.21	68.3	12.98
	25	34.7	5.85	41.3	7.16	48.1	8.61	51.5	9.42	54.8	10.23	61.5	12.00	68.3	13.88
	27	34.7	6.20	41.3	7.62	48.1	9.19	51.5	10.03	54.8	10.92	61.5	12.81	68.3	14.84
	29	34.7	6.58	41.3	8.08	48.1	9.76	51.5	10.69	54.8	11.62	61.5	13.65	68.3	15.85
	31	34.7	6.95	41.3	8.58	48.1	10.40	51.5	11.36	54.8	12.37	61.5	14.55	68.3	16.89
	33	34.7	7.39	41.3	9.13	48.1	11.07	51.5	12.08	54.8	13.18	61.5	15.50	68.3	18.02
	35	34.7	7.82	41.3	9.68	48.1	11.74	51.5	12.87	54.8	14.02	61.5	16.52	68.3	19.21
	37	34.7	8.26	41.3	10.26	48.1	12.49	50.5	13.68	54.8	14.92	61.5	17.59	68.3	20.46
	39	34.7	8.75	41.3	10.87	48.1	13.24	49.8	14.52	54.8	15.85	61.5	18.69	68.3	21.79
	41	32.8	9.86	39.3	12.19	45.8	14.79	48.9	14.92	52.1	16.27	58.6	19.16	65.1	22.28
	43	31.0	10.28	38.1	12.72	44.1	15.58	48.0	15.86	49.5	16.88	57.5	19.64	63.3	22.85
	44	30.6	10.72	37.2	13.26	43.6	16.43	46.8	16.85	50.0	17.53	56.4	20.15	62.8	23.44
	47	28.8	14.26	36.0	17.64	42.1	17.25	45.2	17.11	48.2	18.65	54.5	21.64	60.8	25.17
	50	26.4	14.00	32.3	17.32	37.6	18.19	40.3	18.53	43.0	19.91	48.6	23.12	54.6	26.32
	52	20.8	11.00	27.9	13.70	34.6	15.27	38.0	16.18	38.2	15.65	39.1	15.44	41.3	15.85
60%	-5	29.8	3.53	35.4	4.31	41.3	5.17	44.1	5.63	47.0	6.12	52.8	7.14	58.5	8.25
	0	29.8	3.54	35.4	4.32	41.3	5.18	44.1	5.64	47.0	6.13	52.8	7.16	58.5	8.26
	4	29.8	3.55	35.4	4.33	41.3	5.19	44.1	5.66	47.0	6.15	52.8	7.18	58.5	8.29
	7	29.8	3.62	35.4	4.41	41.3	5.29	44.1	5.77	47.0	6.26	52.8	7.31	58.5	8.45
	10	29.8	4.49	35.4	5.27	41.3	6.11	44.1	6.55	46.9	6.98	52.8	7.91	58.5	8.87
	12	29.8	4.58	35.4	5.36	41.3	6.23	44.1	6.66	46.9	7.10	52.8	8.06	58.5	9.01
	14	29.8	4.64	35.4	5.45	41.3	6.32	44.1	6.78	46.9	7.24	52.8	8.20	58.5	9.19
	16	29.8	4.69	35.4	5.53	41.3	6.43	44.1	6.90	46.9	7.36	52.8	8.35	58.5	9.36
	18	29.8	4.78	35.4	5.62	41.3	6.55	44.1	7.01	46.9	7.50	52.8	8.49	58.5	9.53
	20	29.8	4.84	35.4	5.74	41.3	6.66	44.1	7.16	46.9	7.65	52.8	8.66	58.5	9.74
	21	29.8	4.90	35.4	5.77	41.3	6.72	44.1	7.21	46.9	7.71	52.8	8.75	58.5	9.82
	23	29.8	4.95	35.4	5.88	41.3	6.84	44.1	7.36	46.9	7.85	52.8	9.10	58.5	10.46
	25	29.8	5.04	35.4	6.00	41.3	7.10	44.1	7.71	46.9	8.35	52.8	9.71	58.5	11.16
	27	29.8	5.24	35.4	6.35	41.3	7.56	44.1	8.23	46.9	8.90	52.8	10.34	58.5	11.91
	29	29.8	5.53	35.4	6.72	41.3	8.06	44.1	8.75	46.9	9.48	52.8	11.04	58.5	12.72
	31	29.8	5.88	35.4	7.16	41.3	8.55	44.1	9.30	46.9	10.08	52.8	11.74	58.5	13.53
	33	29.8	6.20	35.4	7.56	41.3	9.07	44.1	9.88	46.9	10.72	52.8	12.49	58.5	14.43
	35	29.8	6.58	35.4	8.03	41.3	9.62	44.1	10.49	46.9	11.39	52.8	13.30	58.5	15.36
	37	29.8	6.95	35.4	8.49	41.3	10.20	43.3	11.13	46.9	12.08	52.8	14.14	58.5	16.34
	39	29.8	7.33	35.4	8.98	41.3	10.81	42.7	11.79	46.9	12.84	52.8	15.01	58.5	17.39
	41	28.1	8.29	33.7	10.11	39.2	12.12	41.9	12.17	44.6	13.21	50.2	15.43	55.8	17.81
	43	26.6	8.64	32.0	10.54	38.1	12.77	41.1	12.93	43.3	13.71	49.6	15.82	54.6	18.28
	44	26.2	9.01	31.9	11.00	37.3	13.47	40.1	13.74	42.9	14.23	48.3	16.23	53.9	18.74
	47	24.7	11.99	30.8	14.63	36.1	14.14	38.7	13.95	41.3	15.15	46.7	17.42	52.1	20.12
	50	22.6	11.77	27.6	14.37	32.2	14.91	34.5	15.10	36.8	16.17	41.7	18.62	46.8	21.04
	52	17.8	8.97	23.9	11.17	29.6	12.57	32.6	13.19	32.8	12.76	33.6	12.59	35.4	12.92

GMV X DC Inverter VRF Units

TC—Total capacity of outdoor unit; PI—Power input of outdoor unit															
Connection ratio	Outdoor air temp. (℃ DB)	Indoor air temp.													
		14.0℃ WB		17.0℃ WB		18.0℃ WB		19.0℃ WB		20.0℃ WB		22.0℃ WB		24.0℃ WB	
		20.0℃ DB		24.0℃ DB		26.0℃ DB		27.0℃ DB		28.0℃ DB		30.0℃ DB		32.0℃ DB	
		TC	PI	TC	PI	TC	PI	TC	PI	TC	PI	TC	PI	TC	PI
		kW	kW	kW	kW	kW	kW	kW	kW	kW	kW	kW	kW	kW	kW
50%	-5	24.8	2.93	29.5	3.50	34.4	4.14	36.8	4.48	39.1	4.84	44.0	5.60	48.8	6.41
	0	24.8	2.93	29.5	3.51	34.4	4.15	36.8	4.49	39.1	4.85	44.0	5.61	48.8	6.42
	4	24.8	2.94	29.5	3.52	34.4	4.16	36.8	4.51	39.1	4.87	44.0	5.63	48.8	6.45
	7	24.8	3.00	29.5	3.59	34.4	4.24	36.8	4.59	39.1	4.96	44.0	5.74	48.8	6.57
	10	24.8	3.88	29.5	4.49	34.4	5.13	36.8	5.48	39.1	5.80	44.0	6.52	48.8	7.27
	12	24.8	3.91	29.5	4.55	34.4	5.22	36.8	5.53	39.1	5.91	44.0	6.64	48.8	7.39
	14	24.8	3.97	29.5	4.61	34.4	5.27	36.8	5.65	39.1	6.00	44.0	6.75	48.8	7.53
	16	24.8	4.03	29.5	4.67	34.4	5.36	36.8	5.74	39.1	6.08	44.0	6.87	48.8	7.65
	18	24.8	4.09	29.5	4.75	34.4	5.45	36.8	5.82	39.1	6.20	44.0	6.98	48.8	7.79
	20	24.8	4.14	29.5	4.81	34.4	5.53	36.8	5.94	39.1	6.32	44.0	7.13	48.8	7.94
	21	24.8	4.17	29.5	4.87	34.4	5.59	36.8	5.97	39.1	6.37	44.0	7.19	48.8	8.03
	23	24.8	4.23	29.5	4.93	34.4	5.68	36.8	6.08	39.1	6.49	44.0	7.30	48.8	8.20
	25	24.8	4.29	29.5	5.01	34.4	5.80	36.8	6.20	39.1	6.69	44.0	7.68	48.8	8.75
	27	24.8	4.38	29.5	5.22	34.4	6.11	36.8	6.61	39.1	7.10	44.0	8.17	48.8	9.33
	29	24.8	4.61	29.5	5.51	34.4	6.49	36.8	7.01	39.0	7.56	44.0	8.69	48.8	9.94
	31	24.8	4.87	29.5	5.82	34.4	6.93	36.8	7.45	39.0	8.03	44.0	9.24	48.8	10.58
	33	24.8	5.16	29.5	6.17	34.4	7.30	36.8	7.88	39.0	8.52	44.0	9.82	48.8	11.24
	35	24.8	5.45	29.5	6.52	34.4	7.71	36.8	8.35	39.0	9.01	44.0	10.43	48.8	11.94
	37	24.8	5.74	29.5	6.90	34.4	8.17	36.1	8.84	39.0	9.56	44.0	11.07	48.8	12.69
	39	24.8	6.06	29.5	7.27	34.4	8.63	35.6	9.36	39.0	10.14	44.0	11.74	48.8	13.47
	41	23.4	6.86	28.1	8.21	32.7	9.71	34.9	9.68	37.1	10.45	41.8	12.10	46.5	13.85
	43	22.2	7.17	26.7	8.62	31.8	10.23	34.3	10.37	36.5	10.86	40.7	12.41	45.4	14.21
	44	21.8	7.46	26.6	8.93	31.1	10.79	33.4	10.93	35.6	11.26	40.3	12.73	44.9	14.56
	47	20.6	9.93	25.7	11.89	30.1	11.33	32.3	11.10	34.3	11.99	38.9	13.66	43.5	15.64
	50	18.9	9.75	23.0	11.67	26.9	11.95	28.8	12.02	30.6	12.80	34.7	14.60	39.1	16.36
	52	14.8	7.14	20.0	8.88	24.7	10.00	27.2	10.50	27.3	10.15	28.0	10.01	29.5	10.28

GMV-785WM/B-X(P)

TC—Total capacity of outdoor unit; PI—Power input of outdoor unit															
Connection ratio	Outdoor air temp. (℃ DB)	Indoor air temp.													
		14.0℃ WB		17.0℃ WB		18.0℃ WB		19.0℃ WB		20.0℃ WB		22.0℃ WB		24.0℃ WB	
		20.0℃ DB		24.0℃ DB		26.0℃ DB		27.0℃ DB		28.0℃ DB		30.0℃ DB		32.0℃ DB	
		TC	PI	TC	PI	TC	PI	TC	PI	TC	PI	TC	PI	TC	PI
		kW	kW	kW	kW	kW	kW	kW	kW	kW	kW	kW	kW	kW	kW
135%	-5	69.5	10.61	82.7	12.92	96.0	13.08	99.7	13.15	101.5	13.22	104.1	13.37	106.7	13.51
	0	69.5	10.63	82.7	12.95	96.0	13.10	99.7	13.17	101.5	13.24	104.1	13.40	106.7	13.54
	4	69.5	10.67	82.7	12.99	96.0	13.15	99.7	13.22	101.5	13.29	104.1	13.45	106.7	13.59
	7	69.5	10.87	82.7	13.24	96.0	13.40	99.7	13.47	101.5	13.54	104.1	13.70	106.7	13.84
	10	69.5	11.06	82.7	13.52	96.0	16.08	99.7	16.43	100.8	16.11	103.3	15.43	105.9	14.72
	12	69.5	11.26	82.7	13.78	96.0	16.40	98.2	16.33	99.7	16.01	101.9	15.30	104.5	15.07
	14	69.5	11.48	82.7	14.04	95.7	16.59	97.1	16.27	98.2	15.91	100.8	15.78	103.3	15.95
	16	69.5	11.68	82.7	14.33	94.6	16.53	95.7	16.40	96.8	16.46	99.4	16.63	101.9	16.79
	18	69.5	11.90	82.7	14.62	93.2	17.14	94.3	17.24	95.7	17.34	98.2	17.50	100.8	17.66
	20	69.5	12.16	82.7	15.56	91.8	17.98	93.2	18.08	94.3	18.18	96.8	18.34	99.4	18.53
	21	69.5	12.49	82.7	16.11	91.2	18.40	92.6	18.50	93.7	18.60	96.3	18.79	98.8	18.95
	23	69.5	13.39	82.7	17.27	90.1	19.25	91.2	19.34	92.3	19.44	94.9	19.63	97.4	19.83
	25	69.5	14.30	82.7	18.50	88.6	20.09	90.1	20.18	91.2	20.31	93.7	20.51	96.3	20.70
	27	69.5	15.27	82.7	19.80	87.5	17.69	88.6	21.06	89.8	21.15	92.3	21.38	94.9	21.61
	29	69.5	16.30	82.7	21.15	86.1	21.77	87.2	21.90	88.6	22.03	91.2	22.25	93.7	22.48
	31	69.5	17.40	82.4	22.38	84.7	22.64	86.1	22.77	87.2	22.87	89.8	23.13	92.3	23.39
	33	69.5	18.53	81.0	23.22	83.6	23.45	84.7	23.61	86.1	23.74	88.6	24.00	90.9	24.29
	35	69.5	19.76	79.6	24.06	82.2	24.36	83.6	24.49	84.7	24.61	87.2	24.91	89.8	25.16
	37	69.5	21.02	78.5	24.94	81.0	25.23	82.2	25.36	83.6	25.52	85.8	25.81	88.4	26.10
	39	69.5	22.38	77.1	25.78	79.6	26.07	81.0	26.23	82.2	26.39	84.7	26.68	87.2	27.01
	41	65.6	24.90	75.6	30.32	78.1	30.69	79.4	28.40	80.5	28.55	83.0	28.89	85.6	29.19
	43	62.0	25.97	74.2	31.61	76.5	32.35	77.9	30.19	79.0	29.64	81.4	29.62	83.9	29.93
	44	61.1	27.08	71.7	32.97	74.4	34.10	76.0	32.08	77.3	30.77	79.9	30.38	82.6	30.70
	47	57.6	36.03	69.3	43.87	71.9	35.80	73.4	32.57	74.5	32.74	77.2	32.63	79.9	32.97
	50	52.8	35.38	62.1	43.08	64.2	37.75	65.4	35.26	66.5	34.95	68.9	34.87	71.8	34.48
	52	33.7	20.94	45.4	26.07	56.1	29.33	61.8	30.80	62.1	29.78	63.6	29.38	67.2	30.17
120%	-5	64.1	9.45	76.2	12.23	88.6	12.99	94.9	13.06	99.8	13.13	102.1	13.27	104.3	13.41
	0	64.1	9.47	76.2	12.25	88.6	13.02	94.9	13.09	99.8	13.16	102.1	13.29	104.3	13.43
	4	64.1	9.50	76.2	12.30	88.6	13.06	94.9	13.13	99.8	13.20	102.1	13.34	104.3	13.48
	7	64.1	9.68	76.2	12.52	88.6	13.31	94.9	13.38	99.8	13.45	102.1	13.59	104.3	13.73
	10	64.1	10.09	76.2	12.32	88.6	14.65	94.9	15.85	99.4	16.53	101.6	15.88	103.9	15.27
	12	64.1	10.29	76.2	12.55	88.6	14.94	94.9	16.14	98.0	16.43	100.2	15.82	102.5	15.17
	14	64.1	10.48	76.2	12.81	88.6	15.23	94.9	16.46	96.6	16.33	99.1	15.72	101.4	15.82
	16	64.1	10.67	76.2	13.07	88.6	15.53	94.3	16.59	95.4	16.37	97.7	16.53	99.9	16.66
	18	64.1	10.87	76.2	13.33	88.6	16.08	92.9	17.14	94.0	17.21	96.3	17.37	98.8	17.53
	20	64.1	11.09	76.2	13.84	88.6	17.27	91.8	17.98	92.9	18.05	95.1	18.21	97.4	18.37
	21	64.1	11.19	76.2	14.33	88.6	17.89	90.9	18.40	92.0	18.47	94.6	18.63	96.8	18.82
	23	64.1	11.97	76.2	15.36	88.6	19.15	89.8	19.21	90.9	19.31	93.2	19.50	95.4	19.67
	25	64.1	12.78	76.2	16.43	87.2	19.99	88.4	20.05	89.5	20.15	92.0	20.35	94.3	20.54
	27	64.1	13.65	76.2	17.56	86.1	20.80	87.2	20.93	88.4	21.02	90.6	21.22	92.9	21.41
	29	64.1	14.56	76.2	18.76	84.7	21.64	85.8	21.77	87.0	21.87	89.2	22.09	91.8	22.29
	31	64.1	15.53	76.2	20.02	83.6	22.51	84.7	22.61	85.8	22.74	88.1	22.96	90.3	23.19
	33	64.1	16.53	76.2	21.38	82.2	23.35	83.3	23.48	84.4	23.58	86.7	23.84	88.9	24.06
	35	64.1	17.60	76.2	22.77	80.7	24.19	81.9	24.32	83.3	24.45	85.5	24.71	87.8	24.97
	37	64.1	18.73	76.2	24.26	79.6	25.07	80.7	25.20	81.9	25.33	84.1	25.58	86.4	25.88
	39	64.1	19.92	75.9	25.62	78.2	25.91	79.3	26.07	80.5	26.20	83.0	26.49	85.3	26.75
	41	60.6	22.17	72.4	28.69	76.7	30.48	77.8	28.22	79.2	28.37	81.4	28.67	83.7	28.97
	43	57.2	23.11	69.0	29.91	75.3	32.12	76.3	29.98	78.0	29.45	79.9	29.39	82.1	29.72
	44	56.4	24.11	68.6	31.20	73.1	33.87	74.5	31.86	76.0	30.57	78.4	30.15	80.8	30.46
	47	53.2	32.08	66.3	41.51	70.7	35.57	71.9	32.35	73.3	32.52	75.7	32.37	78.1	32.71
	50	48.7	31.50	59.5	40.76	63.1	37.50	64.1	35.03	65.4	34.72	67.6	34.60	70.2	34.21
	52	33.0	20.80	44.4	25.89	55.0	29.14	60.5	30.59	60.8	29.58	62.3	29.18	65.8	29.97

GMV X DC Inverter VRF Units

TC—Total capacity of outdoor unit; PI—Power input of outdoor unit															
Connection ratio	Outdoor air temp. (℃ DB)	Indoor air temp.													
		14.0℃ WB		17.0℃ WB		18.0℃ WB		19.0℃ WB		20.0℃ WB		22.0℃ WB		24.0℃ WB	
		20.0℃ DB		24.0℃ DB		26.0℃ DB		27.0℃ DB		28.0℃ DB		30.0℃ DB		32.0℃ DB	
		TC	PI	TC	PI	TC	PI	TC	PI	TC	PI	TC	PI	TC	PI
		kW	kW	kW	kW	kW	kW	kW	kW	kW	kW	kW	kW	kW	kW
110%	-5	58.7	8.35	70.0	10.75	81.3	12.91	87.0	12.97	92.6	13.04	99.8	13.17	101.9	13.29
	0	58.7	8.37	70.0	10.77	81.3	12.93	87.0	13.00	92.6	13.07	99.8	13.19	101.9	13.31
	4	58.7	8.40	70.0	10.81	81.3	12.98	87.0	13.05	92.6	13.12	99.8	13.24	101.9	13.36
	7	58.7	8.56	70.0	11.01	81.3	13.22	87.0	13.29	92.6	13.36	99.8	13.48	101.9	13.61
	10	58.7	9.15	70.0	11.16	81.3	13.26	87.0	14.33	92.6	15.43	99.7	16.37	101.9	15.82
	12	58.7	9.35	70.0	11.39	81.3	13.52	87.0	14.62	92.6	15.72	98.5	16.30	100.5	15.72
	14	58.7	9.51	70.0	11.58	81.3	13.78	87.0	14.88	92.6	16.01	97.1	16.30	99.4	15.69
	16	58.7	9.67	70.0	11.81	81.3	14.04	87.0	15.17	92.6	16.33	96.0	16.40	98.0	16.56
	18	58.7	9.87	70.0	12.03	81.3	14.33	87.0	15.59	92.6	17.11	94.6	17.24	96.8	17.40
	20	58.7	10.06	70.0	12.29	81.3	15.17	87.0	16.75	91.2	17.95	93.4	18.08	95.4	18.24
	21	58.7	10.16	70.0	12.65	81.3	15.72	87.0	17.37	90.6	18.37	92.6	18.50	94.9	18.66
	23	58.7	10.64	70.0	13.55	81.3	16.85	87.0	18.63	89.2	19.18	91.5	19.37	93.4	19.54
	25	58.7	11.32	70.0	14.49	81.3	18.02	87.0	19.96	88.1	20.02	90.1	20.22	92.3	20.38
	27	58.7	12.10	70.0	15.49	81.3	19.28	85.5	20.80	86.7	20.86	88.9	21.06	90.9	21.25
	29	58.7	12.91	70.0	16.53	81.3	20.60	84.4	21.64	85.5	21.74	87.5	21.93	89.8	22.12
	31	58.7	13.75	70.0	17.63	81.3	21.99	83.0	22.48	84.1	22.58	86.4	22.77	88.4	23.00
	33	58.7	14.62	70.0	18.79	80.7	23.19	81.9	23.32	83.0	23.42	85.0	23.64	87.2	23.87
	35	58.7	15.56	70.0	20.02	79.6	24.03	80.5	24.16	81.6	24.29	83.6	24.52	85.8	24.74
	37	58.7	16.56	70.0	21.32	78.2	24.91	79.3	25.00	80.2	25.13	82.4	25.39	84.4	25.62
	39	58.7	17.60	70.0	22.71	76.8	25.75	77.9	25.88	79.0	26.01	81.0	26.26	83.3	26.52
	41	55.5	19.60	66.5	25.23	75.6	30.28	76.5	28.03	77.6	28.18	79.6	28.44	81.8	28.70
	43	52.4	20.44	63.2	26.31	74.5	31.91	75.1	29.80	76.2	29.25	78.1	29.17	80.3	29.42
	44	51.7	21.31	63.0	27.43	72.1	33.65	73.2	31.65	74.5	30.36	76.5	29.91	79.0	30.19
	47	48.7	28.36	60.9	36.50	69.7	35.33	70.6	32.14	71.8	32.31	74.0	32.12	76.4	32.41
	50	44.6	27.85	54.6	35.84	62.2	37.25	63.0	34.79	64.0	34.49	66.0	34.32	68.7	33.90
	52	32.5	20.66	43.7	25.72	54.0	28.94	59.5	30.39	59.8	29.39	61.2	28.99	64.7	29.77
100%	-5	53.4	7.31	63.5	9.35	74.0	11.66	78.5	12.89	84.1	12.95	94.6	13.07	99.9	13.19
	0	53.4	7.32	63.5	9.37	74.0	11.69	78.5	12.91	84.1	12.98	94.6	13.09	99.9	13.21
	4	53.4	7.35	63.5	9.41	74.0	11.73	78.5	12.96	84.1	13.02	94.6	13.14	99.9	13.26
	7	53.4	7.48	63.5	9.58	74.0	11.95	78.5	13.20	84.1	13.27	94.6	13.39	99.9	13.51
	10	53.4	8.28	63.5	10.06	74.0	11.90	78.5	12.85	84.1	13.87	94.5	15.70	99.9	16.32
	12	53.4	8.39	63.5	10.19	74.0	12.06	78.5	13.02	84.1	14.14	94.5	15.97	98.5	16.19
	14	53.4	8.53	63.5	10.37	74.0	12.26	78.5	13.26	84.1	14.40	94.5	16.25	97.4	16.06
	16	53.4	8.73	63.5	10.60	74.0	12.54	78.5	13.55	84.1	14.73	94.2	16.61	96.0	16.42
	18	53.4	8.92	63.5	10.84	74.0	12.78	78.5	13.82	84.1	15.01	92.9	16.94	94.9	17.19
	20	53.4	9.06	63.5	11.01	74.0	13.20	78.5	14.54	84.1	15.97	91.5	17.83	93.4	18.10
	21	53.4	9.15	63.5	11.12	74.0	13.66	78.5	15.04	84.1	16.51	90.9	18.44	92.9	18.60
	23	53.4	9.39	63.5	11.88	74.0	14.68	78.5	16.17	84.1	17.76	89.8	19.51	91.5	19.68
	25	53.4	9.98	63.5	12.64	74.0	15.62	78.5	17.20	84.1	18.99	88.4	20.22	90.4	20.40
	27	53.4	10.67	63.5	13.50	74.0	16.76	78.5	18.46	84.1	20.38	87.0	20.93	88.9	21.12
	29	53.4	11.30	63.5	14.42	74.0	17.93	78.5	19.74	83.8	21.59	85.8	21.94	87.7	22.13
	31	53.4	12.02	63.5	15.36	74.0	19.11	78.5	21.27	82.8	22.46	83.8	22.83	86.4	23.03
	33	53.4	12.79	63.5	16.36	74.0	20.37	78.5	22.51	81.3	23.28	83.4	23.49	85.2	23.70
	35	53.4	13.60	63.5	17.42	74.0	21.72	78.5	24.00	79.9	24.12	81.8	24.34	83.8	24.56
	37	53.4	14.49	63.5	18.55	74.0	23.13	77.6	24.86	78.9	24.99	80.6	25.16	82.6	25.39
	39	53.4	15.43	63.5	19.76	74.0	24.64	76.6	25.68	77.0	25.81	79.6	25.99	80.6	26.23
	41	50.4	17.14	60.3	21.95	70.3	27.37	75.1	27.84	76.0	27.98	77.9	28.23	79.9	28.49
	43	47.7	17.87	57.3	22.90	68.6	28.84	73.7	29.59	75.0	29.04	76.2	28.96	79.1	29.21
	44	47.0	18.64	57.2	23.86	66.9	30.41	71.9	31.44	72.9	30.15	74.9	29.69	77.1	29.96
	47	44.3	24.80	55.3	31.76	64.7	31.93	69.4	31.92	70.3	32.08	72.4	31.88	74.6	32.17
	50	40.6	24.35	49.5	31.18	57.8	33.67	61.9	34.56	62.7	34.25	64.6	34.07	67.0	33.64
	52	31.9	18.81	42.9	23.41	53.1	26.35	58.4	27.66	58.7	26.75	60.1	26.39	63.5	27.10

TC—Total capacity of outdoor unit; PI—Power input of outdoor unit															
Connection ratio	Outdoor air temp. (℃ DB)	Indoor air temp.													
		14.0℃ WB		17.0℃ WB		18.0℃ WB		19.0℃ WB		20.0℃ WB		22.0℃ WB		24.0℃ WB	
		20.0℃ DB		24.0℃ DB		26.0℃ DB		27.0℃ DB		28.0℃ DB		30.0℃ DB		32.0℃ DB	
		TC	PI	TC	PI	TC	PI	TC	PI	TC	PI	TC	PI	TC	PI
		kW	kW	kW	kW	kW	kW	kW	kW	kW	kW	kW	kW	kW	kW
90%	-5	48.0	6.37	57.2	8.07	66.6	9.96	71.1	11.01	75.7	12.11	85.0	12.95	94.3	13.07
	0	48.0	6.39	57.2	8.08	66.6	9.98	71.1	11.03	75.7	12.13	85.0	12.98	94.3	13.10
	4	48.0	6.41	57.2	8.11	66.6	10.02	71.1	11.07	75.7	12.17	85.0	13.03	94.3	13.14
	7	48.0	6.53	57.2	8.26	66.6	10.20	71.1	11.27	75.7	12.40	85.0	13.27	94.3	13.39
	10	48.0	7.22	57.2	8.68	66.6	10.16	71.1	11.45	75.7	12.19	85.1	13.96	94.3	15.82
	12	48.0	7.32	57.2	8.79	66.6	10.30	71.1	11.60	75.7	12.42	85.1	14.20	94.3	16.03
	14	48.0	7.45	57.2	8.94	66.6	10.47	71.1	11.77	75.7	12.64	85.1	14.45	94.3	16.29
	16	48.0	7.61	57.2	9.14	66.6	10.71	71.1	12.04	75.7	12.92	85.1	14.78	94.0	16.61
	18	48.0	7.79	57.2	9.35	66.6	10.92	71.1	12.27	75.7	13.17	85.1	15.12	93.1	17.21
	20	48.0	7.90	57.2	9.49	66.6	11.28	71.1	12.52	75.7	13.72	85.1	16.24	91.5	17.92
	21	48.0	7.98	57.2	9.59	66.6	11.66	71.1	12.94	75.7	14.19	85.1	16.80	90.9	18.33
	23	48.0	8.19	57.2	10.24	66.6	12.54	71.1	13.92	75.7	15.19	85.1	18.04	89.5	19.27
	25	48.0	8.71	57.2	10.90	66.6	13.34	71.1	14.85	75.7	16.25	85.1	19.30	88.4	20.05
	27	48.0	9.31	57.2	11.64	66.6	14.31	71.1	15.85	75.7	17.40	85.1	20.60	87.0	20.93
	29	48.0	9.86	57.2	12.44	66.6	15.31	71.1	16.93	75.7	18.57	84.1	21.59	85.8	21.78
	31	48.0	10.49	57.2	13.25	66.6	16.32	71.1	18.07	75.7	19.82	82.7	22.37	84.4	22.67
	33	48.0	11.16	57.2	14.11	66.6	17.40	71.1	19.23	75.7	21.08	81.6	23.28	83.3	23.49
	35	48.0	11.87	57.2	15.02	66.6	18.55	71.1	20.50	75.7	22.55	80.2	24.12	81.9	24.34
	37	48.0	12.64	57.2	16.00	66.6	19.75	69.9	21.23	75.7	24.12	78.8	24.99	80.7	24.93
	39	48.0	13.46	57.2	17.04	66.6	21.04	68.9	21.93	75.7	25.57	77.6	25.92	79.3	25.85
	41	45.4	14.96	54.3	18.93	63.3	23.37	67.6	23.78	72.0	26.15	76.3	27.98	78.0	28.24
	43	42.9	15.59	51.6	19.73	61.5	24.65	66.3	25.26	70.6	27.15	75.0	28.70	76.7	29.01
	44	42.3	16.26	51.5	20.58	60.2	25.97	64.7	26.85	69.1	28.18	73.4	29.43	75.3	29.70
	47	39.9	21.64	49.7	27.39	58.2	27.27	62.5	27.26	66.6	29.99	71.0	31.60	72.9	31.89
	50	36.5	21.25	44.6	26.89	52.0	28.75	55.7	29.51	59.4	32.01	63.3	33.77	65.5	33.35
	52	28.7	17.54	38.6	21.83	47.8	24.57	52.6	25.79	52.9	24.94	54.8	24.61	57.2	25.26
80%	-5	42.7	5.51	50.8	6.79	59.2	8.44	63.2	9.29	67.2	10.16	75.7	12.06	83.8	12.92
	0	42.7	5.52	50.8	6.80	59.2	8.46	63.2	9.31	67.2	10.18	75.7	12.08	83.8	12.94
	4	42.7	5.54	50.8	6.83	59.2	8.49	63.2	9.34	67.2	10.21	75.7	12.12	83.8	12.99
	7	42.7	5.64	50.8	6.96	59.2	8.65	63.2	9.52	67.2	10.40	75.7	12.35	83.8	13.23
	10	42.7	6.57	50.8	7.86	59.2	9.25	63.2	9.96	67.3	10.67	75.6	12.19	83.8	14.15
	12	42.7	6.66	50.8	7.99	59.2	9.41	63.2	10.16	67.3	10.87	75.6	12.40	83.8	14.04
	14	42.7	6.79	50.8	8.15	59.2	9.57	63.2	10.32	67.3	11.07	75.6	12.61	83.8	14.36
	16	42.7	6.89	50.8	8.28	59.2	9.77	63.2	10.51	67.3	11.24	75.6	12.90	83.8	14.88
	18	42.7	7.02	50.8	8.44	59.2	9.99	63.2	10.74	67.3	11.46	75.6	13.19	83.8	15.91
	20	42.7	7.15	50.8	8.60	59.2	10.16	63.2	10.93	67.3	11.72	75.6	13.66	83.8	16.49
	21	42.7	7.21	50.8	8.67	59.2	10.25	63.2	11.06	67.3	11.98	75.6	14.16	83.8	17.65
	23	42.7	7.34	50.8	8.86	59.2	10.74	63.2	11.77	67.3	12.81	75.6	15.14	83.8	18.88
	25	42.7	7.57	50.8	9.41	59.2	11.48	63.2	12.58	67.3	13.67	75.6	16.21	83.8	20.15
	27	42.7	8.05	50.8	10.03	59.2	12.23	63.2	13.42	67.3	14.67	75.6	17.31	83.8	20.86
	29	42.7	8.57	50.8	10.67	59.2	13.04	63.2	14.30	67.1	15.64	75.6	18.47	83.8	21.61
	31	42.7	9.09	50.8	11.35	59.2	13.88	63.2	15.23	67.1	16.68	75.6	19.71	82.4	22.40
	33	42.7	9.67	50.8	12.65	59.2	14.78	63.2	16.23	67.1	17.76	75.6	21.04	81.3	23.21
	35	42.7	10.25	50.8	12.65	59.2	15.72	63.2	17.30	67.1	18.91	75.6	22.45	79.9	24.05
	37	42.7	10.87	50.8	13.62	59.2	16.72	62.1	18.43	67.1	20.14	75.6	23.91	78.8	24.94
	39	42.7	11.51	50.8	14.46	59.2	17.79	61.3	19.63	67.1	21.45	75.6	25.46	77.4	25.87
	41	40.3	12.92	48.3	15.94	56.2	19.81	60.1	20.07	63.8	21.94	72.0	26.04	76.1	27.90
	43	38.1	13.46	46.9	16.63	54.8	20.87	59.0	21.34	62.4	22.77	70.6	26.71	74.9	28.62
	44	37.6	14.05	45.7	17.33	53.6	22.01	57.5	22.67	61.2	23.64	69.3	27.39	73.5	29.34
	47	35.4	18.69	44.2	23.06	51.8	23.11	55.5	23.01	59.0	25.15	66.9	29.41	71.1	31.51
	50	32.4	18.35	39.6	22.64	46.2	24.37	49.5	24.92	52.7	26.86	59.8	31.43	63.9	32.95
	52	25.5	14.80	34.3	18.42	42.5	20.73	46.8	21.76	47.0	21.05	48.1	20.76	50.8	21.32

GMV X DC Inverter VRF Units

TC—Total capacity of outdoor unit; PI—Power input of outdoor unit															
Connection ratio	Outdoor air temp. (℃ DB)	Indoor air temp.													
		14.0℃ WB		17.0℃ WB		18.0℃ WB		19.0℃ WB		20.0℃ WB		22.0℃ WB		24.0℃ WB	
		20.0℃ DB		24.0℃ DB		26.0℃ DB		27.0℃ DB		28.0℃ DB		30.0℃ DB		32.0℃ DB	
		TC	PI	TC	PI	TC	PI	TC	PI	TC	PI	TC	PI	TC	PI
		kW	kW	kW	kW	kW	kW	kW	kW	kW	kW	kW	kW	kW	kW
70%	-5	37.4	4.69	44.5	5.80	51.8	7.03	55.3	7.71	59.0	8.41	66.1	9.90	73.4	11.52
	0	37.4	4.70	44.5	5.81	51.8	7.05	55.3	7.73	59.0	8.42	66.1	9.92	73.4	11.54
	4	37.4	4.72	44.5	5.83	51.8	7.07	55.3	7.76	59.0	8.45	66.1	9.96	73.4	11.58
	7	37.4	4.80	44.5	5.94	51.8	7.20	55.3	7.90	59.0	8.61	66.1	10.14	73.4	11.79
	10	37.4	5.79	44.5	6.86	51.8	7.99	55.3	8.60	58.9	9.22	66.2	10.48	73.4	11.77
	12	37.4	5.85	44.5	6.95	51.8	8.15	55.3	8.77	58.9	9.38	66.2	10.67	73.4	12.00
	14	37.4	5.95	44.5	7.08	51.8	8.28	55.3	8.89	58.9	9.54	66.2	10.87	73.4	12.23
	16	37.4	6.05	44.5	7.21	51.8	8.44	55.3	9.09	58.9	9.74	66.2	11.06	73.4	12.45
	18	37.4	6.15	44.5	7.34	51.8	8.60	55.3	9.25	58.9	9.90	66.2	11.29	73.4	12.71
	20	37.4	6.24	44.5	7.47	51.8	8.77	55.3	9.41	58.9	10.09	66.2	11.51	73.4	13.07
	21	37.4	6.31	44.5	7.54	51.8	8.83	55.3	9.51	58.9	10.19	66.2	11.64	73.4	13.52
	23	37.4	6.40	44.5	7.67	51.8	9.02	55.3	9.83	58.9	10.71	66.2	12.52	73.4	14.49
	25	37.4	6.53	44.5	7.99	51.8	9.61	55.3	10.51	58.9	11.42	66.2	13.39	73.4	15.49
	27	37.4	6.92	44.5	8.51	51.8	10.25	55.3	11.19	58.9	12.19	66.2	14.30	73.4	16.56
	29	37.4	7.34	44.5	9.02	51.8	10.90	55.3	11.94	58.9	12.97	66.2	15.23	73.4	17.69
	31	37.4	7.76	44.5	9.57	51.8	11.61	55.3	12.68	58.9	13.81	66.2	16.24	73.4	18.86
	33	37.4	8.25	44.5	10.19	51.8	12.36	55.3	13.49	58.9	14.72	66.2	17.30	73.4	20.12
	35	37.4	8.73	44.5	10.80	51.8	13.10	55.3	14.36	58.9	15.65	66.2	18.44	73.4	21.44
	37	37.4	9.22	44.5	11.45	51.8	13.94	54.3	15.27	58.9	16.66	66.2	19.63	73.4	22.84
	39	37.4	9.77	44.5	12.13	51.8	14.78	53.6	16.20	58.9	17.69	66.2	20.86	73.4	24.32
	41	35.3	11.00	42.2	13.61	49.2	16.51	52.6	16.66	56.0	18.16	63.0	21.39	70.0	24.88
	43	33.4	11.47	40.9	14.20	47.4	17.39	51.6	17.71	53.3	18.84	61.8	21.92	68.0	25.51
	44	32.9	11.96	40.0	14.80	46.9	18.34	50.4	18.81	53.8	19.57	60.6	22.49	67.5	26.16
	47	31.0	15.92	38.7	19.69	45.3	19.26	48.6	19.10	51.8	20.82	58.6	24.15	65.3	28.09
	50	28.4	15.63	34.7	19.34	40.4	20.30	43.3	20.68	46.2	22.23	52.3	25.81	58.7	29.38
	52	22.3	12.28	30.0	15.29	37.2	17.05	40.9	18.06	41.1	17.47	42.1	17.23	44.5	17.69
60%	-5	32.0	3.94	38.1	4.81	44.4	5.77	47.4	6.29	50.5	6.83	56.7	7.97	63.0	9.21
	0	32.0	3.95	38.1	4.82	44.4	5.78	47.4	6.30	50.5	6.84	56.7	7.99	63.0	9.22
	4	32.0	3.96	38.1	4.84	44.4	5.80	47.4	6.32	50.5	6.86	56.7	8.02	63.0	9.26
	7	32.0	4.04	38.1	4.93	44.4	5.91	47.4	6.44	50.5	6.99	56.7	8.17	63.0	9.43
	10	32.0	5.01	38.1	5.89	44.4	6.82	47.4	7.31	50.5	7.80	56.7	8.83	63.0	9.90
	12	32.0	5.11	38.1	5.98	44.4	6.95	47.4	7.44	50.5	7.92	56.7	8.99	63.0	10.06
	14	32.0	5.18	38.1	6.08	44.4	7.05	47.4	7.57	50.5	8.09	56.7	9.15	63.0	10.25
	16	32.0	5.24	38.1	6.18	44.4	7.18	47.4	7.70	50.5	8.22	56.7	9.32	63.0	10.45
	18	32.0	5.34	38.1	6.27	44.4	7.31	47.4	7.83	50.5	8.38	56.7	9.48	63.0	10.64
	20	32.0	5.40	38.1	6.40	44.4	7.44	47.4	7.99	50.5	8.54	56.7	9.67	63.0	10.87
	21	32.0	5.47	38.1	6.44	44.4	7.50	47.4	8.05	50.5	8.60	56.7	9.77	63.0	10.96
	23	32.0	5.53	38.1	6.57	44.4	7.63	47.4	8.22	50.5	8.77	56.7	10.16	63.0	11.68
	25	32.0	5.63	38.1	6.70	44.4	7.92	47.4	8.60	50.5	9.32	56.7	10.84	63.0	12.45
	27	32.0	5.85	38.1	7.08	44.4	8.44	47.4	9.19	50.5	9.93	56.7	11.55	63.0	13.29
	29	32.0	6.18	38.1	7.50	44.4	8.99	47.4	9.77	50.5	10.58	56.7	12.32	63.0	14.20
	31	32.0	6.57	38.1	7.99	44.4	9.54	47.4	10.38	50.5	11.26	56.7	13.10	63.0	15.11
	33	32.0	6.92	38.1	8.44	44.4	10.12	47.4	11.03	50.5	11.97	56.7	13.94	63.0	16.11
	35	32.0	7.34	38.1	8.96	44.4	10.74	47.4	11.71	50.5	12.71	56.7	14.85	63.0	17.14
	37	32.0	7.76	38.1	9.48	44.4	11.39	46.6	12.42	50.5	13.49	56.7	15.78	63.0	18.24
	39	32.0	8.18	38.1	10.03	44.4	12.06	45.9	13.16	50.5	14.33	56.7	16.75	63.0	19.41
	41	30.3	9.25	36.2	11.29	42.2	13.53	45.1	13.58	48.0	14.75	54.0	17.22	60.0	19.89
	43	28.6	9.65	34.4	11.76	40.9	14.26	44.2	14.43	46.6	15.31	53.4	17.65	58.7	20.40
	44	28.2	10.06	34.3	12.27	40.2	15.03	43.2	15.34	46.1	15.89	52.0	18.11	57.9	20.91
	47	26.6	13.39	33.2	16.33	38.8	15.79	41.6	15.57	44.4	16.91	50.2	19.45	56.0	22.46
	50	24.3	13.14	29.7	16.04	34.7	16.64	37.1	16.86	39.6	18.05	44.8	20.78	50.4	23.49
	52	19.1	10.01	25.7	12.46	31.8	14.03	35.1	14.73	35.2	14.24	36.1	14.05	38.1	14.43

TC—Total capacity of outdoor unit; PI—Power input of outdoor unit															
Connection ratio	Outdoor air temp. (℃ DB)	Indoor air temp.													
		14.0℃ WB		17.0℃ WB		18.0℃ WB		19.0℃ WB		20.0℃ WB		22.0℃ WB		24.0℃ WB	
		20.0℃ DB		24.0℃ DB		26.0℃ DB		27.0℃ DB		28.0℃ DB		30.0℃ DB		32.0℃ DB	
		TC	PI	TC	PI	TC	PI	TC	PI	TC	PI	TC	PI	TC	PI
		kW	kW	kW	kW	kW	kW	kW	kW	kW	kW	kW	kW	kW	kW
50%	-5	26.7	3.27	31.8	3.91	37.0	4.62	39.5	5.00	42.1	5.40	47.3	6.25	52.5	7.16
	0	26.7	3.27	31.8	3.92	37.0	4.63	39.5	5.01	42.1	5.41	47.3	6.26	52.5	7.17
	4	26.7	3.28	31.8	3.93	37.0	4.65	39.5	5.03	42.1	5.43	47.3	6.29	52.5	7.20
	7	26.7	3.34	31.8	4.00	37.0	4.73	39.5	5.12	42.1	5.53	47.3	6.40	52.5	7.33
	10	26.7	4.33	31.8	5.01	37.0	5.73	39.5	6.11	42.1	6.47	47.3	7.28	52.5	8.12
	12	26.7	4.37	31.8	5.08	37.0	5.82	39.5	6.18	42.1	6.60	47.3	7.41	52.5	8.25
	14	26.7	4.43	31.8	5.14	37.0	5.89	39.5	6.31	42.1	6.70	47.3	7.54	52.5	8.41
	16	26.7	4.50	31.8	5.21	37.0	5.98	39.5	6.40	42.1	6.79	47.3	7.67	52.5	8.54
	18	26.7	4.56	31.8	5.30	37.0	6.08	39.5	6.50	42.1	6.92	47.3	7.80	52.5	8.70
	20	26.7	4.63	31.8	5.37	37.0	6.18	39.5	6.63	42.1	7.05	47.3	7.96	52.5	8.86
	21	26.7	4.66	31.8	5.43	37.0	6.24	39.5	6.66	42.1	7.12	47.3	8.02	52.5	8.96
	23	26.7	4.72	31.8	5.50	37.0	6.34	39.5	6.79	42.1	7.25	47.3	8.15	52.5	9.15
	25	26.7	4.79	31.8	5.60	37.0	6.47	39.5	6.92	42.1	7.47	47.3	8.57	52.5	9.77
	27	26.7	4.88	31.8	5.82	37.0	6.82	39.5	7.37	42.1	7.92	47.3	9.12	52.5	10.42
	29	26.7	5.14	31.8	6.15	37.0	7.25	39.5	7.83	41.9	8.44	47.3	9.70	52.5	11.09
	31	26.7	5.43	31.8	6.50	37.0	7.73	39.5	8.31	41.9	8.96	47.3	10.32	52.5	11.81
	33	26.7	5.76	31.8	6.89	37.0	8.15	39.5	8.80	41.9	9.51	47.3	10.96	52.5	12.55
	35	26.7	6.08	31.8	7.28	37.0	8.60	39.5	9.32	41.9	10.06	47.3	11.64	52.5	13.33
	37	26.7	6.40	31.8	7.70	37.0	9.12	38.8	9.87	41.9	10.67	47.3	12.36	52.5	14.17
	39	26.7	6.76	31.8	8.12	37.0	9.64	38.3	10.45	41.9	11.32	47.3	13.10	52.5	15.04
	41	25.2	7.66	30.2	9.17	35.1	10.84	37.6	10.81	39.9	11.67	45.0	13.51	50.0	15.46
	43	23.8	8.00	28.7	9.62	34.2	11.42	36.9	11.58	39.2	12.12	43.8	13.86	48.8	15.86
	44	23.5	8.33	28.6	9.97	33.5	12.05	36.0	12.20	38.3	12.57	43.3	14.21	48.3	16.26
	47	22.1	11.09	27.6	13.27	32.4	12.65	34.7	12.39	36.9	13.38	41.8	15.25	46.7	17.46
	50	20.3	10.88	24.8	13.03	28.9	13.34	30.9	13.41	32.9	14.28	37.3	16.30	42.0	18.26
	52	16.0	7.97	21.5	9.92	26.5	11.16	29.2	11.72	29.4	11.33	30.1	11.18	31.8	11.48

GMV-850WM/B-X(P)

TC—Total capacity of outdoor unit; PI—Power input of outdoor unit															
Connection ratio	Outdoor air temp. (℃ DB)	Indoor air temp.													
		14.0℃ WB		17.0℃ WB		18.0℃ WB		19.0℃ WB		20.0℃ WB		22.0℃ WB		24.0℃ WB	
		20.0℃ DB		24.0℃ DB		26.0℃ DB		27.0℃ DB		28.0℃ DB		30.0℃ DB		32.0℃ DB	
		TC	PI	TC	PI	TC	PI	TC	PI	TC	PI	TC	PI	TC	PI
		kW	kW	kW	kW	kW	kW	kW	kW	kW	kW	kW	kW	kW	kW
135%	-5	75.2	11.76	89.6	14.32	103.9	14.50	107.9	14.57	109.9	14.65	112.7	14.82	115.5	14.98
	0	75.2	11.78	89.6	14.35	103.9	14.52	107.9	14.60	109.9	14.68	112.7	14.85	115.5	15.01
	4	75.2	11.83	89.6	14.40	103.9	14.58	107.9	14.65	109.9	14.73	112.7	14.91	115.5	15.06
	7	75.2	12.05	89.6	14.67	103.9	14.85	107.9	14.93	109.9	15.00	112.7	15.18	115.5	15.34
	10	75.2	12.26	89.6	14.98	103.9	17.82	107.9	18.21	109.1	17.85	111.9	17.10	114.6	16.31
	12	75.2	12.48	89.6	15.27	103.9	18.18	106.4	18.10	107.9	17.75	110.4	16.96	113.1	16.71
	14	75.2	12.73	89.6	15.56	103.6	18.39	105.2	18.03	106.4	17.64	109.1	17.49	111.9	17.67
	16	75.2	12.94	89.6	15.88	102.4	18.32	103.6	18.18	104.9	18.25	107.6	18.43	110.4	18.61
	18	75.2	13.19	89.6	16.20	100.9	19.00	102.1	19.11	103.6	19.22	106.4	19.39	109.1	19.57
	20	75.2	13.48	89.6	17.24	99.4	19.93	100.9	20.04	102.1	20.15	104.9	20.33	107.6	20.54
	21	75.2	13.84	89.6	17.85	98.7	20.40	100.3	20.51	101.5	20.61	104.2	20.83	107.0	21.01
	23	75.2	14.84	89.6	19.14	97.5	21.33	98.7	21.44	100.0	21.55	102.7	21.76	105.5	21.98
	25	75.2	15.85	89.6	20.51	96.0	22.26	97.5	22.37	98.7	22.51	101.5	22.73	104.2	22.94
	27	75.2	16.92	89.6	21.94	94.8	19.61	96.0	23.34	97.2	23.45	100.0	23.70	102.7	23.95
	29	75.2	18.07	89.6	23.45	93.2	24.13	94.5	24.27	96.0	24.41	98.7	24.66	101.5	24.92
	31	75.2	19.29	89.3	24.81	91.7	25.09	93.2	25.24	94.5	25.35	97.2	25.63	100.0	25.92
	33	75.2	20.54	87.7	25.74	90.5	25.99	91.7	26.17	93.2	26.31	96.0	26.60	98.4	26.92
	35	75.2	21.90	86.2	26.67	89.0	26.99	90.5	27.14	91.7	27.28	94.5	27.60	97.2	27.89
	37	75.2	23.30	85.0	27.64	87.7	27.96	89.0	28.11	90.5	28.28	92.9	28.61	95.7	28.93
	39	75.2	24.81	83.5	28.57	86.2	28.89	87.7	29.07	89.0	29.25	91.7	29.58	94.5	29.93
	41	71.1	27.60	81.9	33.61	84.5	34.01	86.0	31.48	87.2	31.65	89.9	32.02	92.6	32.35
	43	67.2	28.78	80.4	35.03	82.9	35.85	84.3	33.46	85.5	32.85	88.2	32.83	90.9	33.17
	44	66.2	30.01	77.6	36.54	80.5	37.79	82.3	35.55	83.7	34.10	86.5	33.68	89.4	34.03
	47	62.4	39.93	75.0	48.62	77.8	39.68	79.4	36.09	80.7	36.28	83.6	36.16	86.5	36.54
	50	57.2	39.21	67.2	47.74	69.5	41.84	70.9	39.08	72.0	38.74	74.6	38.65	77.8	38.21
	52	36.5	23.21	49.1	28.89	60.8	32.51	66.9	34.13	67.2	33.01	68.8	32.56	72.7	33.43
120%	-5	69.4	10.47	82.5	13.55	96.0	14.40	102.7	14.48	108.0	14.55	110.5	14.71	112.9	14.86
	0	69.4	10.49	82.5	13.58	96.0	14.43	102.7	14.50	108.0	14.58	110.5	14.74	112.9	14.89
	4	69.4	10.53	82.5	13.63	96.0	14.48	102.7	14.56	108.0	14.64	110.5	14.79	112.9	14.94
	7	69.4	10.73	82.5	13.88	96.0	14.75	102.7	14.83	108.0	14.91	110.5	15.06	112.9	15.22
	10	69.4	11.18	82.5	13.66	96.0	16.24	102.7	17.57	107.6	18.32	110.1	17.60	112.5	16.92
	12	69.4	11.40	82.5	13.91	96.0	16.56	102.7	17.89	106.1	18.21	108.5	17.53	111.0	16.81
	14	69.4	11.62	82.5	14.20	96.0	16.88	102.7	18.25	104.5	18.10	107.3	17.42	109.7	17.53
	16	69.4	11.83	82.5	14.48	96.0	17.21	102.1	18.39	103.3	18.14	105.8	18.32	108.2	18.46
	18	69.4	12.05	82.5	14.77	96.0	17.82	100.6	19.00	101.8	19.07	104.2	19.25	107.0	19.43
	20	69.4	12.30	82.5	15.34	96.0	19.14	99.4	19.93	100.6	20.00	103.0	20.18	105.5	20.36
	21	69.4	12.40	82.5	15.88	96.0	19.82	98.4	20.40	99.7	20.47	102.4	20.65	104.9	20.86
	23	69.4	13.26	82.5	17.03	96.0	21.22	97.2	21.29	98.4	21.40	100.9	21.62	103.3	21.80
	25	69.4	14.16	82.5	18.21	94.5	22.15	95.7	22.23	96.9	22.33	99.7	22.55	102.1	22.76
	27	69.4	15.13	82.5	19.47	93.2	23.05	94.5	23.19	95.7	23.30	98.1	23.52	100.6	23.73
	29	69.4	16.13	82.5	20.79	91.7	23.98	92.9	24.13	94.2	24.23	96.6	24.48	99.4	24.70
	31	69.4	17.21	82.5	22.19	90.5	24.95	91.7	25.06	92.9	25.20	95.4	25.45	97.8	25.70
	33	69.4	18.32	82.5	23.70	89.0	25.88	90.2	26.03	91.4	26.13	93.8	26.42	96.3	26.67
	35	69.4	19.50	82.5	25.24	87.4	26.82	88.7	26.96	90.2	27.10	92.6	27.39	95.1	27.68
	37	69.4	20.76	82.5	26.89	86.2	27.78	87.4	27.93	88.7	28.07	91.1	28.36	93.5	28.68
	39	69.4	22.08	82.2	28.39	84.7	28.72	85.9	28.89	87.1	29.04	89.9	29.36	92.3	29.65
	41	65.6	24.57	78.4	31.80	83.1	33.79	84.3	31.27	85.8	31.44	88.2	31.77	90.6	32.10
	43	62.0	25.61	74.8	33.15	81.5	35.60	82.7	33.22	84.4	32.64	86.5	32.58	88.9	32.93
	44	61.1	26.72	74.3	34.58	79.1	37.54	80.7	35.32	82.3	33.88	84.8	33.41	87.5	33.76
	47	57.6	35.55	71.8	46.01	76.5	39.42	77.8	35.85	79.4	36.05	82.0	35.88	84.6	36.25
	50	52.7	34.91	64.4	45.18	68.3	41.56	69.4	38.82	70.8	38.48	73.2	38.34	76.1	37.92
	52	35.8	23.05	48.1	28.70	59.5	32.29	65.5	33.91	65.9	32.79	67.4	32.35	71.2	33.21

TC—Total capacity of outdoor unit; PI—Power input of outdoor unit															
Connection ratio	Outdoor air temp. (℃ DB)	Indoor air temp.													
		14.0℃ WB		17.0℃ WB		18.0℃ WB		19.0℃ WB		20.0℃ WB		22.0℃ WB		24.0℃ WB	
		20.0℃ DB		24.0℃ DB		26.0℃ DB		27.0℃ DB		28.0℃ DB		30.0℃ DB		32.0℃ DB	
		TC	PI	TC	PI	TC	PI	TC	PI	TC	PI	TC	PI	TC	PI
		kW	kW	kW	kW	kW	kW	kW	kW	kW	kW	kW	kW	kW	kW
110%	-5	63.6	9.26	75.8	11.92	88.0	14.30	94.2	14.38	100.3	14.46	108.1	14.59	110.3	14.73
	0	63.6	9.28	75.8	11.94	88.0	14.33	94.2	14.41	100.3	14.48	108.1	14.62	110.3	14.75
	4	63.6	9.31	75.8	11.98	88.0	14.38	94.2	14.46	100.3	14.54	108.1	14.67	110.3	14.81
	7	63.6	9.48	75.8	12.20	88.0	14.65	94.2	14.73	100.3	14.81	108.1	14.95	110.3	15.08
	10	63.6	10.15	75.8	12.37	88.0	14.70	94.2	15.88	100.3	17.10	107.9	18.14	110.4	17.53
	12	63.6	10.36	75.8	12.62	88.0	14.98	94.2	16.20	100.3	17.42	106.7	18.07	108.8	17.42
	14	63.6	10.54	75.8	12.83	88.0	15.27	94.2	16.49	100.3	17.75	105.2	18.07	107.6	17.39
	16	63.6	10.72	75.8	13.08	88.0	15.56	94.2	16.81	100.3	18.10	103.9	18.18	106.1	18.35
	18	63.6	10.93	75.8	13.34	88.0	15.88	94.2	17.28	100.3	18.96	102.4	19.11	104.9	19.29
	20	63.6	11.15	75.8	13.62	88.0	16.81	94.2	18.57	98.7	19.90	101.2	20.04	103.3	20.22
	21	63.6	11.26	75.8	14.02	88.0	17.42	94.2	19.25	98.1	20.36	100.3	20.51	102.7	20.68
	23	63.6	11.79	75.8	15.02	88.0	18.68	94.2	20.65	96.6	21.26	99.0	21.47	101.2	21.65
	25	63.6	12.55	75.8	16.06	88.0	19.97	94.2	22.12	95.4	22.19	97.5	22.41	100.0	22.58
	27	63.6	13.41	75.8	17.17	88.0	21.37	92.6	23.05	93.8	23.12	96.3	23.34	98.4	23.55
	29	63.6	14.30	75.8	18.32	88.0	22.84	91.4	23.98	92.6	24.09	94.8	24.31	97.2	24.52
	31	63.6	15.24	75.8	19.54	88.0	24.38	89.9	24.92	91.1	25.02	93.5	25.24	95.7	25.49
	33	63.6	16.20	75.8	20.83	87.4	25.70	88.7	25.85	89.9	25.95	92.0	26.21	94.5	26.46
	35	63.6	17.24	75.8	22.19	86.2	26.64	87.1	26.78	88.3	26.92	90.5	27.17	92.9	27.42
	37	63.6	18.35	75.8	23.62	84.7	27.60	85.9	27.71	86.8	27.85	89.3	28.14	91.4	28.39
	39	63.6	19.50	75.8	25.17	83.1	28.54	84.4	28.68	85.6	28.82	87.7	29.11	90.2	29.40
	41	60.1	21.73	72.0	27.96	81.9	33.56	82.8	31.06	84.0	31.23	86.1	31.52	88.6	31.81
	43	56.8	22.65	68.4	29.16	80.7	35.37	81.3	33.03	82.5	32.42	84.6	32.33	87.0	32.61
	44	56.0	23.62	68.2	30.40	78.0	37.29	79.3	35.08	80.7	33.65	82.9	33.15	85.5	33.46
	47	52.8	31.43	66.0	40.45	75.4	39.15	76.5	35.62	77.7	35.81	80.1	35.60	82.7	35.93
	50	48.3	30.87	59.1	39.72	67.3	41.29	68.2	38.56	69.4	38.23	71.5	38.04	74.3	37.57
	52	35.2	22.90	47.3	28.51	58.5	32.08	64.4	33.68	64.7	32.57	66.3	32.13	70.0	32.99
100%	-5	57.8	8.10	68.8	10.37	80.1	12.93	85.0	14.28	91.1	14.36	102.4	14.48	108.2	14.62
	0	57.8	8.11	68.8	10.39	80.1	12.95	85.0	14.31	91.1	14.38	102.4	14.51	108.2	14.64
	4	57.8	8.14	68.8	10.43	80.1	13.00	85.0	14.36	91.1	14.44	102.4	14.57	108.2	14.70
	7	57.8	8.29	68.8	10.62	80.1	13.24	85.0	14.63	91.1	14.70	102.4	14.84	108.2	14.97
	10	57.8	9.18	68.8	11.15	80.1	13.19	85.0	14.24	91.1	15.38	102.4	17.40	108.2	18.09
	12	57.8	9.30	68.8	11.30	80.1	13.36	85.0	14.43	91.1	15.67	102.4	17.70	106.7	17.94
	14	57.8	9.46	68.8	11.49	80.1	13.59	85.0	14.69	91.1	15.96	102.4	18.01	105.5	17.80
	16	57.8	9.67	68.8	11.75	80.1	13.90	85.0	15.02	91.1	16.32	102.0	18.41	103.9	18.20
	18	57.8	9.89	68.8	12.02	80.1	14.17	85.0	15.31	91.1	16.64	100.6	18.77	102.7	19.06
	20	57.8	10.04	68.8	12.20	80.1	14.64	85.0	16.12	91.1	17.70	99.0	19.76	101.2	20.06
	21	57.8	10.14	68.8	12.32	80.1	15.13	85.0	16.67	91.1	18.30	98.4	20.43	100.6	20.62
	23	57.8	10.40	68.8	13.16	80.1	16.27	85.0	17.92	91.1	19.68	97.2	21.62	99.0	21.82
	25	57.8	11.07	68.8	14.00	80.1	17.31	85.0	19.07	91.1	21.05	95.7	22.41	97.8	22.61
	27	57.8	11.82	68.8	14.96	80.1	18.58	85.0	20.46	91.1	22.58	94.2	23.20	96.3	23.40
	29	57.8	12.52	68.8	15.98	80.1	19.87	85.0	21.88	90.8	23.92	92.9	24.31	95.0	24.53
	31	57.8	13.32	68.8	17.02	80.1	21.18	85.0	23.58	89.7	24.89	90.7	25.30	93.5	25.53
	33	57.8	14.17	68.8	18.13	80.1	22.58	85.0	24.95	88.0	25.80	90.3	26.03	92.3	26.26
	35	57.8	15.08	68.8	19.31	80.1	24.07	85.0	26.60	86.5	26.73	88.6	26.97	90.7	27.22
	37	57.8	16.06	68.8	20.56	80.1	25.64	84.1	27.56	85.4	27.70	87.3	27.89	89.4	28.14
	39	57.8	17.10	68.8	21.90	80.1	27.30	82.9	28.47	83.4	28.61	86.2	28.81	87.3	29.07
	41	54.6	19.00	65.3	24.33	76.1	30.33	81.4	30.86	82.3	31.01	84.3	31.29	86.5	31.57
	43	51.6	19.81	62.1	25.38	74.3	31.97	79.8	32.80	81.2	32.19	82.5	32.09	85.6	32.38
	44	50.8	20.66	61.9	26.45	72.5	33.70	77.9	34.85	79.0	33.42	81.1	32.91	83.5	33.20
	47	48.0	27.49	59.8	35.20	70.1	35.39	75.2	35.38	76.1	35.55	78.4	35.34	80.7	35.65
	50	43.9	26.99	53.6	34.56	62.6	37.31	67.0	38.30	67.9	37.96	70.0	37.76	72.6	37.29
	52	34.5	20.85	46.5	25.95	57.5	29.20	63.3	30.66	63.6	29.65	65.1	29.25	68.8	30.03

GMV X DC Inverter VRF Units

TC—Total capacity of outdoor unit; PI—Power input of outdoor unit															
Connection ratio	Outdoor air temp. (℃ DB)	Indoor air temp.													
		14.0℃ WB		17.0℃ WB		18.0℃ WB		19.0℃ WB		20.0℃ WB		22.0℃ WB		24.0℃ WB	
		20.0℃ DB		24.0℃ DB		26.0℃ DB		27.0℃ DB		28.0℃ DB		30.0℃ DB		32.0℃ DB	
		TC	PI	TC	PI	TC	PI	TC	PI	TC	PI	TC	PI	TC	PI
		kW	kW	kW	kW	kW	kW	kW	kW	kW	kW	kW	kW	kW	kW
90%	-5	52.0	7.06	61.9	8.94	72.1	11.04	77.0	12.20	81.9	13.42	92.0	14.36	102.1	14.49
	0	52.0	7.08	61.9	8.96	72.1	11.06	77.0	12.22	81.9	13.44	92.0	14.38	102.1	14.51
	4	52.0	7.10	61.9	8.99	72.1	11.10	77.0	12.27	81.9	13.49	92.0	14.44	102.1	14.57
	7	52.0	7.24	61.9	9.16	72.1	11.31	77.0	12.49	81.9	13.74	92.0	14.71	102.1	14.84
	10	52.0	8.01	61.9	9.62	72.1	11.26	77.0	12.69	82.0	13.51	92.1	15.48	102.1	17.53
	12	52.0	8.11	61.9	9.74	72.1	11.41	77.0	12.85	82.0	13.77	92.1	15.74	102.1	17.77
	14	52.0	8.25	61.9	9.91	72.1	11.61	77.0	13.05	82.0	14.01	92.1	16.02	102.1	18.05
	16	52.0	8.44	61.9	10.14	72.1	11.87	77.0	13.34	82.0	14.32	92.1	16.38	101.8	18.40
	18	52.0	8.63	61.9	10.36	72.1	12.10	77.0	13.60	82.0	14.60	92.1	16.76	100.8	19.07
	20	52.0	8.76	61.9	10.52	72.1	12.50	77.0	13.88	82.0	15.21	92.1	18.00	99.0	19.87
	21	52.0	8.85	61.9	10.63	72.1	12.93	77.0	14.34	82.0	15.73	92.1	18.62	98.4	20.31
	23	52.0	9.08	61.9	11.35	72.1	13.90	77.0	15.42	82.0	16.84	92.1	20.00	96.9	21.36
	25	52.0	9.65	61.9	12.08	72.1	14.79	77.0	16.46	82.0	18.01	92.1	21.39	95.7	22.23
	27	52.0	10.31	61.9	12.90	72.1	15.86	77.0	17.57	82.0	19.28	92.1	22.83	94.2	23.20
	29	52.0	10.93	61.9	13.79	72.1	16.97	77.0	18.77	82.0	20.58	91.1	23.93	92.9	24.14
	31	52.0	11.62	61.9	14.68	72.1	18.09	77.0	20.03	82.0	21.96	89.6	24.80	91.4	25.12
	33	52.0	12.37	61.9	15.64	72.1	19.28	77.0	21.31	82.0	23.36	88.3	25.80	90.2	26.03
	35	52.0	13.16	61.9	16.65	72.1	20.56	77.0	22.72	82.0	24.99	86.8	26.74	88.7	26.98
	37	52.0	14.01	61.9	17.73	72.1	21.89	75.7	23.53	82.0	26.74	85.3	27.70	87.4	27.63
	39	52.0	14.92	61.9	18.89	72.1	23.32	74.6	24.31	82.0	28.34	84.1	28.72	85.9	28.65
	41	49.1	16.58	58.8	20.98	68.5	25.90	73.2	26.35	78.0	28.99	82.7	31.02	84.5	31.29
	43	46.4	17.28	55.9	21.87	66.6	27.32	71.8	28.00	76.4	30.09	81.3	31.81	83.1	32.15
	44	45.8	18.02	55.7	22.81	65.2	28.78	70.1	29.76	74.8	31.24	79.5	32.62	81.6	32.91
	47	43.2	23.98	53.9	30.36	63.1	30.22	67.6	30.21	72.1	33.23	76.8	35.03	78.9	35.34
	50	39.5	23.55	48.3	29.81	56.3	31.87	60.3	32.71	64.4	35.48	68.6	37.43	70.9	36.96
	52	31.1	19.44	41.8	24.20	51.7	27.23	57.0	28.59	57.2	27.64	59.3	27.27	61.9	28.00
80%	-5	46.2	6.10	55.0	7.53	64.1	9.36	68.5	10.30	72.8	11.26	81.9	13.36	90.8	14.32
	0	46.2	6.11	55.0	7.54	64.1	9.37	68.5	10.32	72.8	11.28	81.9	13.39	90.8	14.34
	4	46.2	6.14	55.0	7.57	64.1	9.41	68.5	10.36	72.8	11.32	81.9	13.44	90.8	14.40
	7	46.2	6.25	55.0	7.71	64.1	9.58	68.5	10.55	72.8	11.53	81.9	13.69	90.8	14.66
	10	46.2	7.28	55.0	8.71	64.1	10.25	68.5	11.04	72.9	11.82	81.9	13.51	90.8	15.68
	12	46.2	7.38	55.0	8.85	64.1	10.43	68.5	11.26	72.9	12.05	81.9	13.74	90.8	15.56
	14	46.2	7.53	55.0	9.03	64.1	10.61	68.5	11.44	72.9	12.27	81.9	13.98	90.8	15.91
	16	46.2	7.64	55.0	9.18	64.1	10.83	68.5	11.65	72.9	12.46	81.9	14.29	90.8	16.49
	18	46.2	7.78	55.0	9.36	64.1	11.07	68.5	11.90	72.9	12.70	81.9	14.62	90.8	17.63
	20	46.2	7.92	55.0	9.54	64.1	11.26	68.5	12.12	72.9	12.99	81.9	15.15	90.8	18.27
	21	46.2	7.99	55.0	9.61	64.1	11.36	68.5	12.26	72.9	13.28	81.9	15.69	90.8	19.56
	23	46.2	8.14	55.0	9.82	64.1	11.90	68.5	13.05	72.9	14.20	81.9	16.79	90.8	20.92
	25	46.2	8.39	55.0	10.43	64.1	12.73	68.5	13.95	72.9	15.16	81.9	17.97	90.8	22.33
	27	46.2	8.93	55.0	11.11	64.1	13.55	68.5	14.88	72.9	16.26	81.9	19.18	90.8	23.12
	29	46.2	9.50	55.0	11.83	64.1	14.45	68.5	15.85	72.6	17.34	81.9	20.47	90.8	23.96
	31	46.2	10.07	55.0	12.58	64.1	15.38	68.5	16.88	72.6	18.48	81.9	21.85	89.3	24.82
	33	46.2	10.72	55.0	14.02	64.1	16.38	68.5	17.99	72.6	19.68	81.9	23.31	88.0	25.73
	35	46.2	11.36	55.0	14.02	64.1	17.42	68.5	19.18	72.6	20.96	81.9	24.88	86.5	26.66
	37	46.2	12.05	55.0	15.09	64.1	18.53	67.3	20.43	72.6	22.32	81.9	26.50	85.3	27.64
	39	46.2	12.76	55.0	16.02	64.1	19.72	66.3	21.75	72.6	23.78	81.9	28.22	83.8	28.67
	41	43.7	14.32	52.3	17.66	60.9	21.95	65.1	22.25	69.1	24.32	78.0	28.86	82.4	30.92
	43	41.3	14.92	50.7	18.43	59.3	23.13	63.9	23.65	67.6	25.24	76.4	29.60	81.2	31.72
	44	40.7	15.57	49.5	19.20	58.0	24.39	62.3	25.12	66.3	26.20	75.0	30.36	79.6	32.52
	47	38.4	20.72	47.9	25.55	56.1	25.61	60.1	25.51	63.9	27.88	72.5	32.60	77.0	34.92
	50	35.1	20.34	42.9	25.09	50.0	27.01	53.6	27.62	57.0	29.77	64.7	34.84	69.2	36.52
	52	27.6	16.40	37.2	20.42	46.0	22.98	50.6	24.12	50.9	23.33	52.1	23.01	55.0	23.63

TC—Total capacity of outdoor unit; PI—Power input of outdoor unit															
Connection ratio	Outdoor air temp. (℃ DB)	Indoor air temp.													
		14.0℃ WB		17.0℃ WB		18.0℃ WB		19.0℃ WB		20.0℃ WB		22.0℃ WB		24.0℃ WB	
		20.0℃ DB		24.0℃ DB		26.0℃ DB		27.0℃ DB		28.0℃ DB		30.0℃ DB		32.0℃ DB	
		TC	PI	TC	PI	TC	PI	TC	PI	TC	PI	TC	PI	TC	PI
		kW	kW	kW	kW	kW	kW	kW	kW	kW	kW	kW	kW	kW	kW
70%	-5	40.4	5.20	48.1	6.43	56.1	7.80	59.9	8.55	63.9	9.32	71.5	10.97	79.5	12.76
	0	40.4	5.21	48.1	6.44	56.1	7.81	59.9	8.56	63.9	9.33	71.5	10.99	79.5	12.79
	4	40.4	5.23	48.1	6.47	56.1	7.84	59.9	8.60	63.9	9.37	71.5	11.03	79.5	12.83
	7	40.4	5.32	48.1	6.59	56.1	7.99	59.9	8.75	63.9	9.54	71.5	11.24	79.5	13.07
	10	40.4	6.42	48.1	7.60	56.1	8.85	59.9	9.54	63.8	10.22	71.7	11.62	79.5	13.05
	12	40.4	6.49	48.1	7.71	56.1	9.03	59.9	9.72	63.8	10.40	71.7	11.83	79.5	13.30
	14	40.4	6.60	48.1	7.85	56.1	9.18	59.9	9.86	63.8	10.58	71.7	12.05	79.5	13.55
	16	40.4	6.70	48.1	7.99	56.1	9.36	59.9	10.07	63.8	10.79	71.7	12.26	79.5	13.80
	18	40.4	6.81	48.1	8.14	56.1	9.54	59.9	10.25	63.8	10.97	71.7	12.51	79.5	14.09
	20	40.4	6.92	48.1	8.28	56.1	9.72	59.9	10.43	63.8	11.18	71.7	12.76	79.5	14.48
	21	40.4	6.99	48.1	8.35	56.1	9.79	59.9	10.54	63.8	11.29	71.7	12.91	79.5	14.98
	23	40.4	7.10	48.1	8.50	56.1	10.00	59.9	10.90	63.8	11.87	71.7	13.87	79.5	16.06
	25	40.4	7.24	48.1	8.85	56.1	10.65	59.9	11.65	63.8	12.65	71.7	14.84	79.5	17.17
	27	40.4	7.67	48.1	9.43	56.1	11.36	59.9	12.40	63.8	13.52	71.7	15.85	79.5	18.35
	29	40.4	8.14	48.1	10.00	56.1	12.08	59.9	13.23	63.8	14.38	71.7	16.88	79.5	19.61
	31	40.4	8.60	48.1	10.61	56.1	12.87	59.9	14.05	63.8	15.31	71.7	18.00	79.5	20.90
	33	40.4	9.14	48.1	11.29	56.1	13.69	59.9	14.95	63.8	16.31	71.7	19.18	79.5	22.30
	35	40.4	9.68	48.1	11.97	56.1	14.52	59.9	15.92	63.8	17.35	71.7	20.43	79.5	23.77
	37	40.4	10.22	48.1	12.69	56.1	15.45	58.8	16.92	63.8	18.46	71.7	21.76	79.5	25.31
	39	40.4	10.83	48.1	13.44	56.1	16.38	58.0	17.96	63.8	19.61	71.7	23.12	79.5	26.96
	41	38.2	12.20	45.7	15.09	53.3	18.29	57.0	18.46	60.6	20.13	68.2	23.70	75.7	27.57
	43	36.1	12.71	44.3	15.74	51.4	19.28	55.9	19.63	57.7	20.88	66.9	24.30	73.7	28.28
	44	35.6	13.26	43.3	16.40	50.7	20.33	54.5	20.85	58.2	21.69	65.6	24.93	73.1	29.00
	47	33.6	17.65	41.9	21.83	49.1	21.34	52.6	21.17	56.1	23.08	63.4	26.77	70.7	31.14
	50	30.7	17.33	37.6	21.43	43.8	22.50	46.9	22.92	50.1	24.64	56.6	28.61	63.6	32.56
	52	24.2	13.61	32.5	16.94	40.2	18.90	44.3	20.02	44.5	19.36	45.6	19.10	48.1	19.61
60%	-5	34.7	4.37	41.3	5.33	48.1	6.39	51.4	6.97	54.7	7.57	61.4	8.84	68.2	10.20
	0	34.7	4.38	41.3	5.34	48.1	6.40	51.4	6.98	54.7	7.58	61.4	8.85	68.2	10.22
	4	34.7	4.39	41.3	5.36	48.1	6.43	51.4	7.01	54.7	7.61	61.4	8.89	68.2	10.26
	7	34.7	4.48	41.3	5.46	48.1	6.55	51.4	7.14	54.7	7.75	61.4	9.05	68.2	10.45
	10	34.7	5.56	41.3	6.52	48.1	7.56	51.4	8.10	54.7	8.64	61.4	9.79	68.2	10.97
	12	34.7	5.66	41.3	6.63	48.1	7.71	51.4	8.25	54.7	8.78	61.4	9.97	68.2	11.15
	14	34.7	5.74	41.3	6.74	48.1	7.82	51.4	8.39	54.7	8.96	61.4	10.15	68.2	11.36
	16	34.7	5.81	41.3	6.85	48.1	7.96	51.4	8.53	54.7	9.11	61.4	10.32	68.2	11.58
	18	34.7	5.92	41.3	6.95	48.1	8.10	51.4	8.68	54.7	9.28	61.4	10.50	68.2	11.79
	20	34.7	5.99	41.3	7.10	48.1	8.25	51.4	8.85	54.7	9.46	61.4	10.72	68.2	12.05
	21	34.7	6.06	41.3	7.13	48.1	8.32	51.4	8.93	54.7	9.54	61.4	10.83	68.2	12.15
	23	34.7	6.13	41.3	7.28	48.1	8.46	51.4	9.11	54.7	9.72	61.4	11.26	68.2	12.94
	25	34.7	6.24	41.3	7.42	48.1	8.78	51.4	9.54	54.7	10.32	61.4	12.01	68.2	13.80
	27	34.7	6.49	41.3	7.85	48.1	9.36	51.4	10.18	54.7	11.01	61.4	12.80	68.2	14.73
	29	34.7	6.85	41.3	8.32	48.1	9.97	51.4	10.83	54.7	11.72	61.4	13.66	68.2	15.74
	31	34.7	7.28	41.3	8.85	48.1	10.58	51.4	11.51	54.7	12.48	61.4	14.52	68.2	16.74
	33	34.7	7.67	41.3	9.36	48.1	11.22	51.4	12.22	54.7	13.26	61.4	15.45	68.2	17.85
	35	34.7	8.14	41.3	9.93	48.1	11.90	51.4	12.98	54.7	14.09	61.4	16.45	68.2	19.00
	37	34.7	8.60	41.3	10.50	48.1	12.62	50.4	13.77	54.7	14.95	61.4	17.49	68.2	20.22
	39	34.7	9.07	41.3	11.11	48.1	13.37	49.8	14.59	54.7	15.88	61.4	18.57	68.2	21.51
	41	32.8	10.25	39.2	12.51	45.7	15.00	48.8	15.05	52.0	16.34	58.5	19.09	65.0	22.04
	43	31.0	10.69	37.2	13.04	44.3	15.80	47.9	16.00	50.4	16.96	57.8	19.57	63.6	22.61
	44	30.5	11.15	37.1	13.60	43.5	16.66	46.7	17.00	49.9	17.61	56.3	20.07	62.7	23.18
	47	28.8	14.84	35.9	18.10	42.0	17.50	45.1	17.26	48.1	18.74	54.4	21.56	60.7	24.89
	50	26.3	14.57	32.2	17.78	37.5	18.45	40.2	18.69	42.9	20.01	48.5	23.04	54.5	26.03
	52	20.7	11.10	27.9	13.81	34.5	15.55	38.0	16.32	38.2	15.78	39.1	15.57	41.3	15.99

GMV X DC Inverter VRF Units

TC—Total capacity of outdoor unit; PI—Power input of outdoor unit															
Connection ratio	Outdoor air temp. (℃ DB)	Indoor air temp.													
		14.0℃ WB		17.0℃ WB		18.0℃ WB		19.0℃ WB		20.0℃ WB		22.0℃ WB		24.0℃ WB	
		20.0℃ DB		24.0℃ DB		26.0℃ DB		27.0℃ DB		28.0℃ DB		30.0℃ DB		32.0℃ DB	
		TC	PI	TC	PI	TC	PI	TC	PI	TC	PI	TC	PI	TC	PI
		kW	kW	kW	kW	kW	kW	kW	kW	kW	kW	kW	kW	kW	kW
50%	-5	28.9	3.62	34.4	4.33	40.0	5.12	42.8	5.54	45.5	5.99	51.2	6.93	56.9	7.93
	0	28.9	3.63	34.4	4.34	40.0	5.13	42.8	5.55	45.5	6.00	51.2	6.94	56.9	7.95
	4	28.9	3.64	34.4	4.36	40.0	5.15	42.8	5.58	45.5	6.02	51.2	6.97	56.9	7.98
	7	28.9	3.71	34.4	4.44	40.0	5.24	42.8	5.68	45.5	6.13	51.2	7.10	56.9	8.12
	10	28.9	4.80	34.4	5.56	40.0	6.35	42.8	6.78	45.5	7.17	51.2	8.07	56.9	9.00
	12	28.9	4.84	34.4	5.63	40.0	6.45	42.8	6.85	45.5	7.31	51.2	8.21	56.9	9.14
	14	28.9	4.91	34.4	5.70	40.0	6.52	42.8	6.99	45.5	7.42	51.2	8.35	56.9	9.32
	16	28.9	4.98	34.4	5.77	40.0	6.63	42.8	7.10	45.5	7.53	51.2	8.50	56.9	9.46
	18	28.9	5.05	34.4	5.88	40.0	6.74	42.8	7.21	45.5	7.67	51.2	8.64	56.9	9.64
	20	28.9	5.13	34.4	5.95	40.0	6.85	42.8	7.35	45.5	7.82	51.2	8.82	56.9	9.82
	21	28.9	5.16	34.4	6.02	40.0	6.92	42.8	7.38	45.5	7.89	51.2	8.89	56.9	9.93
	23	28.9	5.23	34.4	6.09	40.0	7.03	42.8	7.53	45.5	8.03	51.2	9.03	56.9	10.15
	25	28.9	5.31	34.4	6.20	40.0	7.17	42.8	7.67	45.5	8.28	51.2	9.50	56.9	10.83
	27	28.9	5.41	34.4	6.45	40.0	7.56	42.8	8.17	45.5	8.78	51.2	10.11	56.9	11.54
	29	28.9	5.70	34.4	6.81	40.0	8.03	42.8	8.68	45.4	9.36	51.2	10.75	56.9	12.30
	31	28.9	6.02	34.4	7.21	40.0	8.57	42.8	9.21	45.4	9.93	51.2	11.44	56.9	13.08
	33	28.9	6.38	34.4	7.64	40.0	9.03	42.8	9.75	45.4	10.54	51.2	12.15	56.9	13.91
	35	28.9	6.74	34.4	8.07	40.0	9.54	42.8	10.32	45.4	11.15	51.2	12.91	56.9	14.77
	37	28.9	7.10	34.4	8.53	40.0	10.11	42.0	10.93	45.4	11.83	51.2	13.69	56.9	15.70
	39	28.9	7.49	34.4	9.00	40.0	10.68	41.5	11.58	45.4	12.55	51.2	14.52	56.9	16.67
	41	27.3	8.49	32.7	10.16	38.1	12.02	40.7	11.98	43.2	12.93	48.7	14.97	54.2	17.13
	43	25.8	8.86	31.0	10.67	37.0	12.66	39.9	12.83	42.5	13.43	47.4	15.36	52.9	17.58
	44	25.4	9.23	31.0	11.05	36.2	13.35	38.9	13.53	41.4	13.94	46.9	15.74	52.3	18.02
	47	24.0	12.29	29.9	14.70	35.0	14.02	37.6	13.73	39.9	14.83	45.3	16.91	50.6	19.35
	50	22.0	12.06	26.8	14.44	31.3	14.78	33.5	14.87	35.6	15.83	40.4	18.07	45.5	20.23
	52	17.3	8.83	23.2	10.99	28.7	12.37	31.6	12.99	31.8	12.56	32.6	12.39	34.4	12.72

GMV-900WM/B-X(P)

TC—Total capacity of outdoor unit; PI—Power input of outdoor unit															
Connection ratio	Outdoor air temp. (℃ DB)	Indoor air temp.													
		14.0℃ WB		17.0℃ WB		18.0℃ WB		19.0℃ WB		20.0℃ WB		22.0℃ WB		24.0℃ WB	
		20.0℃ DB		24.0℃ DB		26.0℃ DB		27.0℃ DB		28.0℃ DB		30.0℃ DB		32.0℃ DB	
		TC	PI	TC	PI	TC	PI	TC	PI	TC	PI	TC	PI	TC	PI
		kW	kW	kW	kW	kW	kW	kW	kW	kW	kW	kW	kW	kW	kW
135%	-5	79.6	12.69	94.8	15.45	110.1	15.64	114.3	15.72	116.3	15.81	119.3	15.99	122.3	16.16
	0	79.6	12.71	94.8	15.48	110.1	15.67	114.3	15.75	116.3	15.84	119.3	16.02	122.3	16.19
	4	79.6	12.76	94.8	15.54	110.1	15.73	114.3	15.81	116.3	15.89	119.3	16.08	122.3	16.25
	7	79.6	13.00	94.8	15.83	110.1	16.02	114.3	16.10	116.3	16.19	119.3	16.38	122.3	16.55
	10	79.6	13.23	94.8	16.17	110.1	19.22	114.3	19.65	115.6	19.26	118.5	18.45	121.4	17.60
	12	79.6	13.46	94.8	16.48	110.1	19.61	112.6	19.53	114.3	19.15	116.8	18.30	119.8	18.02
	14	79.6	13.73	94.8	16.79	109.7	19.84	111.3	19.46	112.6	19.03	115.6	18.88	118.5	19.07
	16	79.6	13.96	94.8	17.13	108.4	19.77	109.7	19.61	111.0	19.69	113.9	19.88	116.8	20.07
	18	79.6	14.23	94.8	17.48	106.8	20.50	108.1	20.62	109.7	20.73	112.6	20.93	115.6	21.12
	20	79.6	14.54	94.8	18.60	105.2	21.51	106.8	21.62	108.1	21.74	111.0	21.93	113.9	22.16
	21	79.6	14.93	94.8	19.26	104.5	22.01	106.2	22.12	107.5	22.24	110.4	22.47	113.3	22.67
	23	79.6	16.01	94.8	20.65	103.3	23.01	104.5	23.13	105.8	23.25	108.8	23.48	111.7	23.71
	25	79.6	17.10	94.8	22.12	101.6	24.02	103.3	24.14	104.5	24.29	107.5	24.52	110.4	24.75
	27	79.6	18.26	94.8	23.67	100.3	21.16	101.6	25.18	102.9	25.30	105.8	25.57	108.8	25.84
	29	79.6	19.49	94.8	25.30	98.7	26.03	100.0	26.19	101.6	26.34	104.5	26.61	107.5	26.88
	31	79.6	20.81	94.5	26.77	97.1	27.08	98.7	27.23	100.0	27.35	102.9	27.66	105.8	27.97
	33	79.6	22.16	92.9	27.77	95.8	28.04	97.1	28.24	98.7	28.39	101.6	28.70	104.2	29.05
	35	79.6	23.63	91.3	28.78	94.2	29.13	95.8	29.28	97.1	29.43	100.0	29.78	102.9	30.09
	37	79.6	25.14	90.0	29.82	92.9	30.17	94.2	30.32	95.8	30.52	98.4	30.87	101.3	31.21
	39	79.6	26.77	88.4	30.83	91.3	31.18	92.9	31.37	94.2	31.56	97.1	31.91	100.0	32.30
	41	75.2	29.78	86.7	36.26	89.5	36.70	91.1	33.97	92.3	34.14	95.2	34.55	98.1	34.91
	43	71.1	31.05	85.1	37.80	87.8	38.68	89.3	36.10	90.5	35.44	93.4	35.42	96.2	35.79
	44	70.1	32.38	82.1	39.42	85.2	40.78	87.2	38.36	88.7	36.79	91.6	36.34	94.7	36.71
	47	66.1	43.08	79.4	52.46	82.4	42.81	84.1	38.94	85.5	39.15	88.5	39.02	91.6	39.42
	50	60.5	42.30	71.2	51.51	73.6	45.14	75.0	42.16	76.2	41.80	79.0	41.70	82.3	41.23
	52	38.7	25.04	52.0	31.17	64.3	35.08	70.8	36.83	71.2	35.61	72.9	35.13	77.0	36.07
120%	-5	73.5	11.30	87.4	14.62	101.6	15.54	108.8	15.62	114.4	15.70	117.0	15.87	119.6	16.04
	0	73.5	11.32	87.4	14.65	101.6	15.57	108.8	15.65	114.4	15.73	117.0	15.90	119.6	16.06
	4	73.5	11.36	87.4	14.70	101.6	15.62	108.8	15.71	114.4	15.79	117.0	15.96	119.6	16.12
	7	73.5	11.57	87.4	14.98	101.6	15.91	108.8	16.00	114.4	16.08	117.0	16.25	119.6	16.42
	10	73.5	12.07	87.4	14.74	101.6	17.52	108.8	18.95	113.9	19.77	116.5	18.99	119.1	18.26
	12	73.5	12.30	87.4	15.01	101.6	17.87	108.8	19.30	112.3	19.65	114.9	18.91	117.5	18.14
	14	73.5	12.53	87.4	15.32	101.6	18.22	108.8	19.69	110.7	19.53	113.6	18.80	116.2	18.91
	16	73.5	12.76	87.4	15.63	101.6	18.57	108.1	19.84	109.4	19.57	112.0	19.77	114.6	19.92
	18	73.5	13.00	87.4	15.94	101.6	19.22	106.5	20.50	107.8	20.58	110.4	20.77	113.3	20.96
	20	73.5	13.27	87.4	16.55	101.6	20.65	105.2	21.51	106.5	21.58	109.1	21.78	111.7	21.97
	21	73.5	13.38	87.4	17.13	101.6	21.39	104.2	22.01	105.5	22.09	108.4	22.28	111.0	22.51
	23	73.5	14.31	87.4	18.37	101.6	22.90	102.9	22.98	104.2	23.09	106.8	23.32	109.4	23.52
	25	73.5	15.28	87.4	19.65	100.0	23.90	101.3	23.98	102.6	24.10	105.5	24.33	108.1	24.56
	27	73.5	16.32	87.4	21.00	98.7	24.87	100.0	25.03	101.3	25.14	103.9	25.37	106.5	25.61
	29	73.5	17.41	87.4	22.43	97.1	25.88	98.4	26.03	99.7	26.15	102.3	26.42	105.2	26.65
	31	73.5	18.57	87.4	23.94	95.8	26.92	97.1	27.04	98.4	27.19	101.0	27.46	103.6	27.73
	33	73.5	19.77	87.4	25.57	94.2	27.93	95.5	28.08	96.8	28.20	99.4	28.51	102.0	28.78
	35	73.5	21.04	87.4	27.23	92.6	28.93	93.9	29.09	95.5	29.24	98.1	29.55	100.7	29.86
	37	73.5	22.40	87.4	29.01	91.3	29.98	92.6	30.13	93.9	30.29	96.5	30.60	99.0	30.94
	39	73.5	23.83	87.1	30.63	89.7	30.98	91.0	31.18	92.2	31.33	95.2	31.68	97.8	31.99
	41	69.4	26.51	83.0	34.31	88.0	36.45	89.2	33.74	90.8	33.92	93.4	34.28	95.9	34.64
	43	65.6	27.63	79.2	35.77	86.3	38.41	87.5	35.85	89.4	35.21	91.6	35.15	94.1	35.54
	44	64.7	28.83	78.7	37.31	83.8	40.50	85.4	38.10	87.2	36.55	89.8	36.05	92.6	36.43
	47	61.0	38.36	76.0	49.64	81.0	42.53	82.4	38.69	84.0	38.89	86.8	38.71	89.6	39.12
	50	55.8	37.66	68.2	48.74	72.3	44.84	73.5	41.88	75.0	41.52	77.5	41.37	80.5	40.91
	52	37.9	24.87	51.0	30.96	63.0	34.84	69.4	36.58	69.7	35.38	71.4	34.90	75.4	35.83

GMV X DC Inverter VRF Units

TC—Total capacity of outdoor unit; PI—Power input of outdoor unit															
Connection ratio	Outdoor air temp. (℃ DB)	Indoor air temp.													
		14.0℃ WB		17.0℃ WB		18.0℃ WB		19.0℃ WB		20.0℃ WB		22.0℃ WB		24.0℃ WB	
		20.0℃ DB		24.0℃ DB		26.0℃ DB		27.0℃ DB		28.0℃ DB		30.0℃ DB		32.0℃ DB	
		TC	PI	TC	PI	TC	PI	TC	PI	TC	PI	TC	PI	TC	PI
		kW	kW	kW	kW	kW	kW	kW	kW	kW	kW	kW	kW	kW	kW
110%	-5	67.3	9.99	80.3	12.86	93.2	15.43	99.7	15.52	106.2	15.60	114.4	15.74	116.8	15.89
	0	67.3	10.01	80.3	12.88	93.2	15.46	99.7	15.54	106.2	15.63	114.4	15.77	116.8	15.92
	4	67.3	10.05	80.3	12.93	93.2	15.52	99.7	15.60	106.2	15.69	114.4	15.83	116.8	15.98
	7	67.3	10.23	80.3	13.17	93.2	15.81	99.7	15.89	106.2	15.98	114.4	16.13	116.8	16.27
	10	67.3	10.95	80.3	13.34	93.2	15.86	99.7	17.13	106.2	18.45	114.3	19.57	116.8	18.91
	12	67.3	11.18	80.3	13.62	93.2	16.17	99.7	17.48	106.2	18.80	113.0	19.49	115.2	18.80
	14	67.3	11.37	80.3	13.85	93.2	16.48	99.7	17.79	106.2	19.15	111.3	19.49	113.9	18.76
	16	67.3	11.57	80.3	14.12	93.2	16.79	99.7	18.14	106.2	19.53	110.1	19.61	112.3	19.80
	18	67.3	11.80	80.3	14.39	93.2	17.13	99.7	18.64	106.2	20.46	108.4	20.62	111.0	20.81
	20	67.3	12.03	80.3	14.70	93.2	18.14	99.7	20.04	104.5	21.47	107.1	21.62	109.4	21.82
	21	67.3	12.15	80.3	15.12	93.2	18.80	99.7	20.77	103.9	21.97	106.2	22.12	108.8	22.32
	23	67.3	12.73	80.3	16.21	93.2	20.15	99.7	22.28	102.3	22.94	104.9	23.17	107.1	23.36
	25	67.3	13.54	80.3	17.33	93.2	21.54	99.7	23.87	101.0	23.94	103.3	24.17	105.8	24.37
	27	67.3	14.47	80.3	18.53	93.2	23.05	98.1	24.87	99.4	24.95	102.0	25.18	104.2	25.41
	29	67.3	15.43	80.3	19.77	93.2	24.64	96.8	25.88	98.1	25.99	100.3	26.22	102.9	26.46
	31	67.3	16.44	80.3	21.08	93.2	26.30	95.2	26.88	96.5	27.00	99.0	27.23	101.3	27.50
	33	67.3	17.48	80.3	22.47	92.6	27.73	93.9	27.89	95.2	28.00	97.4	28.27	100.0	28.55
	35	67.3	18.60	80.3	23.94	91.3	28.74	92.2	28.89	93.5	29.05	95.8	29.32	98.4	29.59
	37	67.3	19.80	80.3	25.49	89.7	29.78	91.0	29.90	91.9	30.05	94.5	30.36	96.8	30.63
	39	67.3	21.04	80.3	27.15	88.0	30.79	89.3	30.94	90.6	31.10	92.9	31.41	95.5	31.72
	41	63.6	23.44	76.3	30.17	86.7	36.21	87.7	33.52	89.0	33.70	91.2	34.01	93.8	34.32
	43	60.1	24.44	72.4	31.46	85.4	38.16	86.1	35.64	87.3	34.98	89.6	34.88	92.1	35.19
	44	59.2	25.49	72.2	32.80	82.6	40.23	83.9	37.85	85.4	36.31	87.8	35.77	90.5	36.10
	47	55.9	33.92	69.8	43.65	79.9	42.25	81.0	38.43	82.3	38.63	84.8	38.41	87.6	38.76
	50	51.2	33.30	62.6	42.86	71.3	44.54	72.2	41.61	73.4	41.25	75.7	41.05	78.7	40.54
	52	37.2	24.71	50.1	30.76	61.9	34.61	68.2	36.34	68.5	35.14	70.2	34.67	74.1	35.60
100%	-5	61.2	8.74	72.8	11.19	84.8	13.95	90.0	15.41	96.5	15.49	108.4	15.63	114.5	15.77
	0	61.2	8.75	72.8	11.21	84.8	13.97	90.0	15.44	96.5	15.52	108.4	15.66	114.5	15.80
	4	61.2	8.79	72.8	11.25	84.8	14.03	90.0	15.50	96.5	15.58	108.4	15.72	114.5	15.86
	7	61.2	8.95	72.8	11.46	84.8	14.29	90.0	15.78	96.5	15.86	108.4	16.01	114.5	16.15
	10	61.2	9.90	72.8	12.03	84.8	14.23	90.0	15.36	96.4	16.59	108.4	18.78	114.6	19.51
	12	61.2	10.03	72.8	12.19	84.8	14.42	90.0	15.57	96.4	16.91	108.4	19.10	112.9	19.36
	14	61.2	10.21	72.8	12.40	84.8	14.67	90.0	15.85	96.4	17.22	108.4	19.43	111.7	19.20
	16	61.2	10.44	72.8	12.68	84.8	15.00	90.0	16.21	96.4	17.61	108.0	19.87	110.0	19.64
	18	61.2	10.67	72.8	12.96	84.8	15.29	90.0	16.52	96.4	17.95	106.5	20.25	108.8	20.56
	20	61.2	10.83	72.8	13.16	84.8	15.79	90.0	17.39	96.4	19.10	104.9	21.32	107.1	21.64
	21	61.2	10.94	72.8	13.29	84.8	16.33	90.0	17.98	96.4	19.75	104.2	22.05	106.5	22.24
	23	61.2	11.22	72.8	14.20	84.8	17.56	90.0	19.34	96.4	21.23	103.0	23.33	104.9	23.54
	25	61.2	11.94	72.8	15.11	84.8	18.68	90.0	20.57	96.4	22.71	101.3	24.18	103.6	24.39
	27	61.2	12.76	72.8	16.14	84.8	20.04	90.0	22.07	96.4	24.37	99.7	25.03	102.0	25.25
	29	61.2	13.51	72.8	17.25	84.8	21.44	90.0	23.61	96.1	25.81	98.3	26.23	100.6	26.47
	31	61.2	14.38	72.8	18.37	84.8	22.85	90.0	25.44	94.9	26.86	96.1	27.30	99.0	27.54
	33	61.2	15.29	72.8	19.56	84.8	24.36	90.0	26.92	93.2	27.83	95.6	28.08	97.7	28.34
	35	61.2	16.27	72.8	20.83	84.8	25.97	90.0	28.70	91.6	28.84	93.8	29.10	96.1	29.37
	37	61.2	17.33	72.8	22.18	84.8	27.66	89.0	29.73	90.4	29.88	92.4	30.09	94.7	30.36
	39	61.2	18.45	72.8	23.63	84.8	29.46	87.8	30.71	88.3	30.87	91.3	31.09	92.4	31.37
	41	57.8	20.50	69.2	26.25	80.6	32.73	86.1	33.29	87.1	33.46	89.3	33.76	91.6	34.06
	43	54.6	21.37	65.7	27.38	78.7	34.49	84.5	35.38	86.0	34.73	87.4	34.63	90.7	34.94
	44	53.8	22.29	65.5	28.54	76.7	36.36	82.5	37.60	83.6	36.05	85.9	35.51	88.4	35.83
	47	50.8	29.66	63.4	37.97	74.2	38.18	79.6	38.17	80.6	38.36	83.0	38.13	85.5	38.47
	50	46.5	29.12	56.8	37.29	66.2	40.26	71.0	41.33	71.9	40.96	74.1	40.74	76.9	40.23
	52	36.6	22.49	49.2	28.00	60.9	31.51	67.0	33.08	67.3	31.99	68.9	31.56	72.8	32.40

TC—Total capacity of outdoor unit; PI—Power input of outdoor unit															
Connection ratio	Outdoor air temp. (℃ DB)	Indoor air temp.													
		14.0℃ WB		17.0℃ WB		18.0℃ WB		19.0℃ WB		20.0℃ WB		22.0℃ WB		24.0℃ WB	
		20.0℃ DB		24.0℃ DB		26.0℃ DB		27.0℃ DB		28.0℃ DB		30.0℃ DB		32.0℃ DB	
		TC	PI	TC	PI	TC	PI	TC	PI	TC	PI	TC	PI	TC	PI
		kW	kW	kW	kW	kW	kW	kW	kW	kW	kW	kW	kW	kW	kW
90%	-5	55.1	7.62	65.5	9.65	76.3	11.91	81.6	13.16	86.7	14.48	97.4	15.49	108.1	15.63
	0	55.1	7.64	65.5	9.67	76.3	11.93	81.6	13.19	86.7	14.50	97.4	15.52	108.1	15.66
	4	55.1	7.66	65.5	9.70	76.3	11.98	81.6	13.24	86.7	14.56	97.4	15.58	108.1	15.72
	7	55.1	7.81	65.5	9.88	76.3	12.20	81.6	13.48	86.7	14.83	97.4	15.87	108.1	16.01
	10	55.1	8.64	65.5	10.38	76.3	12.15	81.6	13.69	86.8	14.57	97.6	16.70	108.1	18.92
	12	55.1	8.75	65.5	10.51	76.3	12.31	81.6	13.87	86.8	14.86	97.6	16.99	108.1	19.17
	14	55.1	8.90	65.5	10.69	76.3	12.52	81.6	14.08	86.8	15.11	97.6	17.28	108.1	19.48
	16	55.1	9.10	65.5	10.94	76.3	12.81	81.6	14.40	86.8	15.45	97.6	17.67	107.8	19.86
	18	55.1	9.31	65.5	11.18	76.3	13.05	81.6	14.68	86.8	15.75	97.6	18.09	106.8	20.58
	20	55.1	9.45	65.5	11.35	76.3	13.49	81.6	14.98	86.8	16.41	97.6	19.43	104.9	21.43
	21	55.1	9.55	65.5	11.47	76.3	13.95	81.6	15.48	86.8	16.97	97.6	20.09	104.2	21.92
	23	55.1	9.79	65.5	12.25	76.3	15.00	81.6	16.64	86.8	18.17	97.6	21.58	102.6	23.05
	25	55.1	10.42	65.5	13.03	76.3	15.95	81.6	17.76	86.8	19.43	97.6	23.08	101.3	23.98
	27	55.1	11.13	65.5	13.92	76.3	17.12	81.6	18.95	86.8	20.80	97.6	24.63	99.7	25.03
	29	55.1	11.79	65.5	14.88	76.3	18.31	81.6	20.25	86.8	22.20	96.5	25.82	98.4	26.05
	31	55.1	12.54	65.5	15.84	76.3	19.52	81.6	21.61	86.8	23.70	94.8	26.75	96.8	27.11
	33	55.1	13.34	65.5	16.87	76.3	20.81	81.6	22.99	86.8	25.21	93.5	27.84	95.5	28.09
	35	55.1	14.19	65.5	17.97	76.3	22.18	81.6	24.51	86.8	26.96	91.9	28.85	93.9	29.11
	37	55.1	15.12	65.5	19.13	76.3	23.62	80.1	25.39	86.8	28.85	90.3	29.89	92.6	29.81
	39	55.1	16.10	65.5	20.38	76.3	25.16	79.0	26.23	86.8	30.58	89.0	30.99	91.0	30.91
	41	52.0	17.88	62.3	22.64	72.5	27.95	77.5	28.43	82.6	31.27	87.5	33.46	89.5	33.76
	43	49.2	18.65	59.2	23.59	70.6	29.47	76.1	30.21	80.9	32.47	86.0	34.32	88.0	34.69
	44	48.5	19.45	59.0	24.61	69.1	31.05	74.2	32.11	79.3	33.70	84.2	35.19	86.4	35.51
	47	45.7	25.88	57.0	32.75	66.8	32.61	71.6	32.60	76.4	35.86	81.4	37.79	83.5	38.13
	50	41.8	25.41	51.1	32.16	59.6	34.38	63.9	35.29	68.1	38.28	72.6	40.39	75.1	39.88
	52	32.9	20.97	44.3	26.11	54.8	29.38	60.3	30.84	60.6	29.83	62.8	29.42	65.5	30.21
80%	-5	48.9	6.58	58.3	8.12	67.8	10.09	72.5	11.11	77.0	12.15	86.7	14.42	96.1	15.45
	0	48.9	6.60	58.3	8.14	67.8	10.11	72.5	11.13	77.0	12.17	86.7	14.44	96.1	15.47
	4	48.9	6.62	58.3	8.17	67.8	10.15	72.5	11.17	77.0	12.21	86.7	14.50	96.1	15.53
	7	48.9	6.74	58.3	8.32	67.8	10.34	72.5	11.38	77.0	12.44	86.7	14.77	96.1	15.82
	10	48.9	7.85	58.3	9.40	67.8	11.06	72.5	11.91	77.2	12.76	86.7	14.57	96.1	16.92
	12	48.9	7.97	58.3	9.55	67.8	11.26	72.5	12.15	77.2	13.00	86.7	14.83	96.1	16.79
	14	48.9	8.12	58.3	9.75	67.8	11.45	72.5	12.34	77.2	13.24	86.7	15.08	96.1	17.17
	16	48.9	8.24	58.3	9.90	67.8	11.68	72.5	12.57	77.2	13.44	86.7	15.42	96.1	17.79
	18	48.9	8.39	58.3	10.10	67.8	11.94	72.5	12.84	77.2	13.70	86.7	15.77	96.1	19.03
	20	48.9	8.55	58.3	10.29	67.8	12.15	72.5	13.07	77.2	14.01	86.7	16.34	96.1	19.72
	21	48.9	8.63	58.3	10.37	67.8	12.26	72.5	13.23	77.2	14.33	86.7	16.93	96.1	21.11
	23	48.9	8.78	58.3	10.60	67.8	12.84	72.5	14.08	77.2	15.32	86.7	18.11	96.1	22.58
	25	48.9	9.05	58.3	11.26	67.8	13.73	72.5	15.05	77.2	16.35	86.7	19.39	96.1	24.09
	27	48.9	9.63	58.3	11.99	67.8	14.62	72.5	16.05	77.2	17.55	86.7	20.69	96.1	24.94
	29	48.9	10.25	58.3	12.76	67.8	15.59	72.5	17.10	76.9	18.71	86.7	22.09	96.1	25.85
	31	48.9	10.87	58.3	13.58	67.8	16.59	72.5	18.22	76.9	19.94	86.7	23.57	94.5	26.78
	33	48.9	11.57	58.3	15.12	67.8	17.68	72.5	19.41	76.9	21.24	86.7	25.16	93.2	27.76
	35	48.9	12.26	58.3	15.12	67.8	18.80	72.5	20.69	76.9	22.62	86.7	26.85	91.6	28.76
	37	48.9	13.00	58.3	16.28	67.8	20.00	71.2	22.04	76.9	24.09	86.7	28.59	90.3	29.83
	39	48.9	13.77	58.3	17.29	67.8	21.27	70.2	23.47	76.9	25.65	86.7	30.45	88.7	30.93
	41	46.2	15.45	55.3	19.06	64.5	23.69	68.9	24.00	73.1	26.24	82.6	31.14	87.3	33.36
	43	43.7	16.10	53.7	19.88	62.8	24.95	67.6	25.52	71.5	27.23	80.9	31.94	85.9	34.22
	44	43.1	16.80	52.4	20.72	61.4	26.32	66.0	27.11	70.2	28.27	79.4	32.75	84.3	35.09
	47	40.6	22.35	50.7	27.57	59.4	27.63	63.7	27.52	67.7	30.08	76.7	35.17	81.5	37.68
	50	37.2	21.95	45.4	27.07	53.0	29.14	56.8	29.80	60.4	32.12	68.5	37.59	73.3	39.41
	52	29.3	17.70	39.4	22.03	48.7	24.79	53.6	26.03	53.9	25.17	55.2	24.83	58.3	25.49

GMV X DC Inverter VRF Units

TC—Total capacity of outdoor unit; PI—Power input of outdoor unit															
Connection ratio	Outdoor air temp. (℃ DB)	Indoor air temp.													
		14.0℃ WB		17.0℃ WB		18.0℃ WB		19.0℃ WB		20.0℃ WB		22.0℃ WB		24.0℃ WB	
		20.0℃ DB		24.0℃ DB		26.0℃ DB		27.0℃ DB		28.0℃ DB		30.0℃ DB		32.0℃ DB	
		TC	PI	TC	PI	TC	PI	TC	PI	TC	PI	TC	PI	TC	PI
		kW	kW	kW	kW	kW	kW	kW	kW	kW	kW	kW	kW	kW	kW
70%	-5	42.8	5.61	51.0	6.94	59.4	8.41	63.4	9.22	67.6	10.05	75.7	11.84	84.2	13.77
	0	42.8	5.62	51.0	6.95	59.4	8.43	63.4	9.24	67.6	10.07	75.7	11.86	84.2	13.80
	4	42.8	5.64	51.0	6.98	59.4	8.46	63.4	9.27	67.6	10.11	75.7	11.91	84.2	13.85
	7	42.8	5.74	51.0	7.11	59.4	8.62	63.4	9.45	67.6	10.30	75.7	12.13	84.2	14.10
	10	42.8	6.92	51.0	8.20	59.4	9.55	63.4	10.29	67.5	11.02	75.9	12.53	84.2	14.08
	12	42.8	7.00	51.0	8.32	59.4	9.75	63.4	10.48	67.5	11.22	75.9	12.76	84.2	14.35
	14	42.8	7.12	51.0	8.47	59.4	9.90	63.4	10.64	67.5	11.41	75.9	13.00	84.2	14.62
	16	42.8	7.23	51.0	8.63	59.4	10.10	63.4	10.87	67.5	11.64	75.9	13.23	84.2	14.89
	18	42.8	7.35	51.0	8.78	59.4	10.29	63.4	11.06	67.5	11.84	75.9	13.50	84.2	15.20
	20	42.8	7.47	51.0	8.93	59.4	10.48	63.4	11.26	67.5	12.07	75.9	13.77	84.2	15.63
	21	42.8	7.54	51.0	9.01	59.4	10.56	63.4	11.37	67.5	12.18	75.9	13.92	84.2	16.17
	23	42.8	7.66	51.0	9.17	59.4	10.79	63.4	11.76	67.5	12.80	75.9	14.97	84.2	17.33
	25	42.8	7.81	51.0	9.55	59.4	11.49	63.4	12.57	67.5	13.65	75.9	16.01	84.2	18.53
	27	42.8	8.28	51.0	10.17	59.4	12.26	63.4	13.38	67.5	14.58	75.9	17.10	84.2	19.80
	29	42.8	8.78	51.0	10.79	59.4	13.03	63.4	14.27	67.5	15.51	75.9	18.22	84.2	21.16
	31	42.8	9.28	51.0	11.45	59.4	13.89	63.4	15.16	67.5	16.52	75.9	19.42	84.2	22.55
	33	42.8	9.86	51.0	12.18	59.4	14.78	63.4	16.13	67.5	17.60	75.9	20.69	84.2	24.06
	35	42.8	10.44	51.0	12.92	59.4	15.67	63.4	17.17	67.5	18.72	75.9	22.05	84.2	25.64
	37	42.8	11.02	51.0	13.69	59.4	16.67	62.3	18.26	67.5	19.92	75.9	23.48	84.2	27.31
	39	42.8	11.68	51.0	14.50	59.4	17.68	61.5	19.38	67.5	21.16	75.9	24.95	84.2	29.09
	41	40.5	13.16	48.4	16.28	56.4	19.74	60.3	19.92	64.2	21.72	72.2	25.57	80.2	29.75
	43	38.2	13.72	46.9	16.98	54.4	20.80	59.2	21.18	61.1	22.53	70.9	26.22	78.0	30.51
	44	37.7	14.31	45.9	17.70	53.7	21.93	57.7	22.50	61.6	23.40	69.5	26.90	77.4	31.29
	47	35.5	19.04	44.4	23.55	51.9	23.03	55.7	22.84	59.4	24.90	67.1	28.88	74.9	33.59
	50	32.5	18.69	39.8	23.12	46.4	24.28	49.7	24.73	53.0	26.58	59.9	30.87	67.3	35.13
	52	25.6	14.69	34.4	18.28	42.6	20.39	46.9	21.60	47.1	20.89	48.3	20.61	51.0	21.16
60%	-5	36.7	4.71	43.7	5.75	50.9	6.90	54.4	7.52	57.9	8.16	65.1	9.53	72.2	11.01
	0	36.7	4.72	43.7	5.76	50.9	6.91	54.4	7.53	57.9	8.18	65.1	9.55	72.2	11.03
	4	36.7	4.74	43.7	5.79	50.9	6.93	54.4	7.56	57.9	8.21	65.1	9.59	72.2	11.07
	7	36.7	4.83	43.7	5.89	50.9	7.06	54.4	7.70	57.9	8.36	65.1	9.76	72.2	11.27
	10	36.7	6.00	43.7	7.04	50.9	8.16	54.4	8.74	57.9	9.32	65.0	10.56	72.2	11.84
	12	36.7	6.11	43.7	7.16	50.9	8.32	54.4	8.90	57.9	9.48	65.0	10.75	72.2	12.03
	14	36.7	6.19	43.7	7.27	50.9	8.43	54.4	9.05	57.9	9.67	65.0	10.95	72.2	12.26
	16	36.7	6.27	43.7	7.39	50.9	8.59	54.4	9.21	57.9	9.82	65.0	11.14	72.2	12.49
	18	36.7	6.38	43.7	7.50	50.9	8.74	54.4	9.36	57.9	10.02	65.0	11.33	72.2	12.73
	20	36.7	6.46	43.7	7.66	50.9	8.90	54.4	9.55	57.9	10.21	65.0	11.57	72.2	13.00
	21	36.7	6.54	43.7	7.70	50.9	8.97	54.4	9.63	57.9	10.29	65.0	11.68	72.2	13.11
	23	36.7	6.61	43.7	7.85	50.9	9.13	54.4	9.82	57.9	10.48	65.0	12.15	72.2	13.96
	25	36.7	6.73	43.7	8.01	50.9	9.48	54.4	10.29	57.9	11.14	65.0	12.96	72.2	14.89
	27	36.7	7.00	43.7	8.47	50.9	10.10	54.4	10.98	57.9	11.87	65.0	13.81	72.2	15.90
	29	36.7	7.39	43.7	8.97	50.9	10.75	54.4	11.68	57.9	12.65	65.0	14.74	72.2	16.98
	31	36.7	7.85	43.7	9.55	50.9	11.41	54.4	12.42	57.9	13.46	65.0	15.67	72.2	18.06
	33	36.7	8.28	43.7	10.10	50.9	12.11	54.4	13.19	57.9	14.31	65.0	16.67	72.2	19.26
	35	36.7	8.78	43.7	10.71	50.9	12.84	54.4	14.00	57.9	15.20	65.0	17.75	72.2	20.50
	37	36.7	9.28	43.7	11.33	50.9	13.62	53.4	14.85	57.9	16.13	65.0	18.88	72.2	21.82
	39	36.7	9.79	43.7	11.99	50.9	14.43	52.7	15.74	57.9	17.13	65.0	20.04	72.2	23.21
	41	34.7	11.06	41.5	13.50	48.3	16.18	51.7	16.24	55.0	17.63	61.9	20.59	68.8	23.78
	43	32.8	11.54	39.4	14.07	46.9	17.05	50.7	17.26	53.4	18.30	61.2	21.11	67.3	24.40
	44	32.3	12.03	39.3	14.68	46.0	17.98	49.5	18.34	52.8	19.00	59.6	21.66	66.4	25.01
	47	30.5	16.01	38.0	19.53	44.5	18.88	47.7	18.62	50.9	20.22	57.6	23.26	64.2	26.85
	50	27.9	15.72	34.1	19.18	39.7	19.90	42.6	20.16	45.4	21.59	51.4	24.86	57.7	28.08
	52	21.9	11.97	29.5	14.91	36.5	16.77	40.2	17.61	40.4	17.03	41.4	16.80	43.7	17.25

TC—Total capacity of outdoor unit; PI—Power input of outdoor unit															
Connection ratio	Outdoor air temp. (℃ DB)	Indoor air temp.													
		14.0℃ WB		17.0℃ WB		18.0℃ WB		19.0℃ WB		20.0℃ WB		22.0℃ WB		24.0℃ WB	
		20.0℃ DB		24.0℃ DB		26.0℃ DB		27.0℃ DB		28.0℃ DB		30.0℃ DB		32.0℃ DB	
		TC	PI	TC	PI	TC	PI	TC	PI	TC	PI	TC	PI	TC	PI
		kW	kW	kW	kW	kW	kW	kW	kW	kW	kW	kW	kW	kW	kW
50%	-5	30.6	3.90	36.4	4.67	42.4	5.53	45.3	5.98	48.2	6.46	54.2	7.48	60.2	8.56
	0	30.6	3.91	36.4	4.68	42.4	5.54	45.3	5.99	48.2	6.47	54.2	7.49	60.2	8.57
	4	30.6	3.93	36.4	4.70	42.4	5.56	45.3	6.02	48.2	6.50	54.2	7.52	60.2	8.61
	7	30.6	4.00	36.4	4.79	42.4	5.66	45.3	6.13	48.2	6.62	54.2	7.66	60.2	8.76
	10	30.6	5.18	36.4	6.00	42.4	6.85	45.3	7.31	48.2	7.74	54.2	8.70	60.2	9.71
	12	30.6	5.22	36.4	6.07	42.4	6.96	45.3	7.39	48.2	7.89	54.2	8.86	60.2	9.86
	14	30.6	5.30	36.4	6.15	42.4	7.04	45.3	7.54	48.2	8.01	54.2	9.01	60.2	10.06
	16	30.6	5.38	36.4	6.23	42.4	7.16	45.3	7.66	48.2	8.12	54.2	9.17	60.2	10.21
	18	30.6	5.45	36.4	6.34	42.4	7.27	45.3	7.77	48.2	8.28	54.2	9.32	60.2	10.40
	20	30.6	5.53	36.4	6.42	42.4	7.39	45.3	7.93	48.2	8.43	54.2	9.52	60.2	10.60
	21	30.6	5.57	36.4	6.50	42.4	7.47	45.3	7.97	48.2	8.51	54.2	9.59	60.2	10.71
	23	30.6	5.65	36.4	6.58	42.4	7.58	45.3	8.12	48.2	8.66	54.2	9.75	60.2	10.95
	25	30.6	5.72	36.4	6.69	42.4	7.74	45.3	8.28	48.2	8.93	54.2	10.25	60.2	11.68
	27	30.6	5.84	36.4	6.96	42.4	8.16	45.3	8.82	48.2	9.48	54.2	10.91	60.2	12.45
	29	30.6	6.15	36.4	7.35	42.4	8.66	45.3	9.36	48.1	10.10	54.2	11.60	60.2	13.27
	31	30.6	6.50	36.4	7.77	42.4	9.24	45.3	9.94	48.1	10.71	54.2	12.34	60.2	14.12
	33	30.6	6.88	36.4	8.24	42.4	9.75	45.3	10.52	48.1	11.37	54.2	13.11	60.2	15.01
	35	30.6	7.27	36.4	8.70	42.4	10.29	45.3	11.14	48.1	12.03	54.2	13.92	60.2	15.94
	37	30.6	7.66	36.4	9.21	42.4	10.91	44.5	11.80	48.1	12.76	54.2	14.78	60.2	16.94
	39	30.6	8.08	36.4	9.71	42.4	11.53	43.9	12.49	48.1	13.54	54.2	15.67	60.2	17.99
	41	28.9	9.16	34.6	10.97	40.3	12.96	43.1	12.92	45.7	13.95	51.6	16.15	57.4	18.49
	43	27.3	9.56	32.9	11.51	39.2	13.65	42.3	13.85	45.0	14.49	50.2	16.57	56.0	18.97
	44	26.9	9.96	32.8	11.92	38.4	14.40	41.2	14.59	43.9	15.04	49.6	16.99	55.4	19.44
	47	25.4	13.26	31.7	15.87	37.1	15.12	39.8	14.82	42.3	16.00	48.0	18.24	53.6	20.88
	50	23.2	13.02	28.4	15.58	33.1	15.95	35.5	16.04	37.7	17.08	42.8	19.49	48.2	21.83
	52	18.3	9.53	24.6	11.86	30.4	13.34	33.5	14.01	33.7	13.55	34.5	13.37	36.4	13.72

GMV-952WM/B-X(P)

TC—Total capacity of outdoor unit; PI—Power input of outdoor unit															
Connection ratio	Outdoor air temp. (℃ DB)	Indoor air temp.													
		14.0℃ WB		17.0℃ WB		18.0℃ WB		19.0℃ WB		20.0℃ WB		22.0℃ WB		24.0℃ WB	
		20.0℃ DB		24.0℃ DB		26.0℃ DB		27.0℃ DB		28.0℃ DB		30.0℃ DB		32.0℃ DB	
		TC	PI	TC	PI	TC	PI	TC	PI	TC	PI	TC	PI	TC	PI
		kW	kW	kW	kW	kW	kW	kW	kW	kW	kW	kW	kW	kW	kW
135%	-5	84.2	13.66	100.3	16.64	116.4	16.84	120.9	16.93	123.1	17.02	126.2	17.22	129.3	17.40
	0	84.2	13.69	100.3	16.67	116.4	16.87	120.9	16.96	123.1	17.05	126.2	17.25	129.3	17.43
	4	84.2	13.74	100.3	16.73	116.4	16.93	120.9	17.02	123.1	17.11	126.2	17.32	129.3	17.50
	7	84.2	13.99	100.3	17.04	116.4	17.25	120.9	17.34	123.1	17.43	126.2	17.64	129.3	17.82
	10	84.2	14.24	100.3	17.41	116.4	20.70	120.9	21.16	122.2	20.74	125.3	19.86	128.4	18.95
	12	84.2	14.49	100.3	17.74	116.4	21.11	119.1	21.03	120.9	20.61	123.6	19.70	126.7	19.41
	14	84.2	14.78	100.3	18.07	116.1	21.36	117.8	20.95	119.1	20.49	122.2	20.32	125.3	20.53
	16	84.2	15.03	100.3	18.45	114.7	21.28	116.1	21.11	117.4	21.20	120.5	21.41	123.6	21.61
	18	84.2	15.33	100.3	18.82	113.0	22.07	114.4	22.20	116.1	22.32	119.1	22.53	122.2	22.74
	20	84.2	15.66	100.3	20.03	111.3	23.15	113.0	23.28	114.4	23.40	117.4	23.61	120.5	23.86
	21	84.2	16.07	100.3	20.74	110.6	23.70	112.3	23.82	113.7	23.95	116.8	24.20	119.8	24.40
	23	84.2	17.24	100.3	22.24	109.2	24.78	110.6	24.90	112.0	25.03	115.0	25.28	118.1	25.53
	25	84.2	18.41	100.3	23.82	107.5	25.86	109.2	25.99	110.6	26.15	113.7	26.40	116.8	26.65
	27	84.2	19.66	100.3	25.49	106.1	22.78	107.5	27.11	108.9	27.24	112.0	27.53	115.0	27.82
	29	84.2	20.99	100.3	27.24	104.4	28.03	105.8	28.19	107.5	28.36	110.6	28.65	113.7	28.94
	31	84.2	22.40	100.0	28.82	102.7	29.15	104.4	29.32	105.8	29.44	108.9	29.78	112.0	30.11
	33	84.2	23.86	98.3	29.90	101.3	30.19	102.7	30.40	104.4	30.57	107.5	30.90	110.2	31.27
	35	84.2	25.44	96.6	30.98	99.6	31.36	101.3	31.52	102.7	31.69	105.8	32.07	108.9	32.40
	37	84.2	27.07	95.2	32.11	98.3	32.48	99.6	32.65	101.3	32.86	104.1	33.23	107.2	33.61
	39	84.2	28.82	93.5	33.19	96.6	33.57	98.3	33.77	99.6	33.98	102.7	34.36	105.8	34.77
	41	79.6	32.06	91.7	39.04	94.7	39.51	96.3	36.57	97.7	36.76	100.7	37.20	103.8	37.58
	43	75.2	33.43	90.0	40.69	92.8	41.65	94.4	38.86	95.8	38.16	98.8	38.13	101.8	38.53
	44	74.1	34.86	86.9	42.45	90.2	43.90	92.2	41.30	93.8	39.61	96.9	39.12	100.2	39.53
	47	69.9	46.39	84.0	56.48	87.2	46.10	89.0	41.93	90.4	42.15	93.6	42.01	96.9	42.44
	50	64.0	45.55	75.3	55.46	77.8	48.61	79.4	45.40	80.6	45.00	83.6	44.89	87.1	44.39
	52	40.9	26.96	55.0	33.56	68.0	37.76	74.9	39.65	75.3	38.34	77.1	37.82	81.4	38.84
120%	-5	77.7	12.17	92.4	15.74	107.5	16.73	115.0	16.82	121.0	16.91	123.8	17.09	126.5	17.26
	0	77.7	12.19	92.4	15.77	107.5	16.76	115.0	16.85	121.0	16.94	123.8	17.12	126.5	17.30
	4	77.7	12.23	92.4	15.83	107.5	16.82	115.0	16.91	121.0	17.00	123.8	17.18	126.5	17.36
	7	77.7	12.46	92.4	16.12	107.5	17.13	115.0	17.22	121.0	17.32	123.8	17.50	126.5	17.68
	10	77.7	12.99	92.4	15.87	107.5	18.86	115.0	20.41	120.5	21.28	123.3	20.45	126.0	19.66
	12	77.7	13.24	92.4	16.16	107.5	19.24	115.0	20.78	118.8	21.16	121.5	20.36	124.3	19.53
	14	77.7	13.49	92.4	16.49	107.5	19.61	115.0	21.20	117.1	21.03	120.2	20.24	122.9	20.36
	16	77.7	13.74	92.4	16.82	107.5	19.99	114.4	21.36	115.7	21.07	118.5	21.28	121.2	21.45
	18	77.7	13.99	92.4	17.16	107.5	20.70	112.6	22.07	114.0	22.15	116.8	22.36	119.8	22.57
	20	77.7	14.28	92.4	17.82	107.5	22.24	111.3	23.15	112.6	23.24	115.4	23.45	118.1	23.65
	21	77.7	14.41	92.4	18.45	107.5	23.03	110.2	23.70	111.6	23.78	114.7	23.99	117.4	24.24
	23	77.7	15.41	92.4	19.78	107.5	24.65	108.9	24.74	110.2	24.86	113.0	25.11	115.7	25.32
	25	77.7	16.45	92.4	21.16	105.8	25.74	107.2	25.82	108.5	25.94	111.6	26.19	114.4	26.44
	27	77.7	17.57	92.4	22.61	104.4	26.78	105.8	26.94	107.2	27.07	109.9	27.32	112.6	27.57
	29	77.7	18.74	92.4	24.15	102.7	27.86	104.1	28.03	105.5	28.15	108.2	28.44	111.3	28.69
	31	77.7	19.99	92.4	25.78	101.3	28.98	102.7	29.11	104.1	29.28	106.8	29.57	109.6	29.86
	33	77.7	21.28	92.4	27.53	99.6	30.07	101.0	30.23	102.4	30.36	105.1	30.69	107.8	30.98
	35	77.7	22.65	92.4	29.32	97.9	31.15	99.3	31.32	101.0	31.48	103.7	31.82	106.5	32.15
	37	77.7	24.11	92.4	31.23	96.6	32.27	97.9	32.44	99.3	32.61	102.0	32.94	104.8	33.32
	39	77.7	25.65	92.1	32.98	94.8	33.36	96.2	33.57	97.6	33.73	100.7	34.11	103.4	34.44
	41	73.4	28.54	87.8	36.94	93.0	39.25	94.4	36.33	96.1	36.52	98.8	36.91	101.5	37.29
	43	69.4	29.75	83.7	38.51	91.3	41.36	92.6	38.60	94.6	37.91	96.9	37.84	99.6	38.26
	44	68.4	31.04	83.2	40.17	88.6	43.61	90.4	41.02	92.2	39.35	95.0	38.82	98.0	39.22
	47	64.5	41.30	80.4	53.45	85.7	45.79	87.2	41.65	88.9	41.87	91.8	41.68	94.8	42.12
	50	59.1	40.55	72.1	52.48	76.5	48.28	77.7	45.10	79.3	44.71	82.0	44.54	85.2	44.04
	52	40.1	26.78	53.9	33.34	66.7	37.51	73.4	39.39	73.8	38.09	75.5	37.58	79.8	38.58

TC—Total capacity of outdoor unit; PI—Power input of outdoor unit															
Connection ratio	Outdoor air temp. (℃ DB)	Indoor air temp.													
		14.0℃ WB 20.0℃ DB		17.0℃ WB 24.0℃ DB		18.0℃ WB 26.0℃ DB		19.0℃ WB 27.0℃ DB		20.0℃ WB 28.0℃ DB		22.0℃ WB 30.0℃ DB		24.0℃ WB 32.0℃ DB	
		TC	PI	TC	PI	TC	PI	TC	PI	TC	PI	TC	PI	TC	PI
		kW	kW	kW	kW	kW	kW	kW	kW	kW	kW	kW	kW	kW	kW
110%	-5	71.2	10.76	84.9	13.84	98.6	16.62	105.5	16.71	112.3	16.79	121.0	16.95	123.5	17.11
	0	71.2	10.78	84.9	13.87	98.6	16.65	105.5	16.74	112.3	16.83	121.0	16.98	123.5	17.14
	4	71.2	10.82	84.9	13.92	98.6	16.71	105.5	16.80	112.3	16.89	121.0	17.05	123.5	17.20
	7	71.2	11.02	84.9	14.18	98.6	17.02	105.5	17.11	112.3	17.20	121.0	17.36	123.5	17.52
	10	71.2	11.79	84.9	14.37	98.6	17.07	105.5	18.45	112.3	19.86	120.9	21.07	123.6	20.36
	12	71.2	12.04	84.9	14.66	98.6	17.41	105.5	18.82	112.3	20.24	119.5	20.99	121.9	20.24
	14	71.2	12.24	84.9	14.91	98.6	17.74	105.5	19.16	112.3	20.61	117.8	20.99	120.5	20.20
	16	71.2	12.45	84.9	15.20	98.6	18.07	105.5	19.53	112.3	21.03	116.4	21.11	118.8	21.32
	18	71.2	12.70	84.9	15.49	98.6	18.45	105.5	20.07	112.3	22.03	114.7	22.20	117.4	22.40
	20	71.2	12.95	84.9	15.82	98.6	19.53	105.5	21.57	110.6	23.11	113.3	23.28	115.7	23.49
	21	71.2	13.08	84.9	16.28	98.6	20.24	105.5	22.36	109.9	23.65	112.3	23.82	115.0	24.03
	23	71.2	13.70	84.9	17.45	98.6	21.70	105.5	23.99	108.2	24.70	110.9	24.94	113.3	25.15
	25	71.2	14.58	84.9	18.66	98.6	23.20	105.5	25.69	106.8	25.78	109.2	26.03	112.0	26.24
	27	71.2	15.57	84.9	19.95	98.6	24.82	103.7	26.78	105.1	26.86	107.8	27.11	110.2	27.36
	29	71.2	16.62	84.9	21.28	98.6	26.53	102.4	27.86	103.7	27.98	106.1	28.23	108.9	28.48
	31	71.2	17.70	84.9	22.70	98.6	28.32	100.7	28.94	102.0	29.07	104.8	29.32	107.2	29.61
	33	71.2	18.82	84.9	24.20	97.9	29.86	99.3	30.03	100.7	30.15	103.1	30.44	105.8	30.73
	35	71.2	20.03	84.9	25.78	96.6	30.94	97.6	31.11	98.9	31.27	101.3	31.57	104.1	31.86
	37	71.2	21.32	84.9	27.44	94.8	32.07	96.2	32.19	97.2	32.36	100.0	32.69	102.4	32.98
	39	71.2	22.65	84.9	29.23	93.1	33.15	94.5	33.32	95.9	33.48	98.3	33.82	101.0	34.15
	41	67.3	25.24	80.7	32.48	91.7	38.99	92.7	36.09	94.1	36.28	96.5	36.62	99.2	36.96
	43	63.6	26.32	76.6	33.87	90.4	41.09	91.0	38.37	92.4	37.66	94.7	37.55	97.4	37.88
	44	62.7	27.44	76.4	35.32	87.4	43.32	88.8	40.75	90.3	39.09	92.8	38.51	95.8	38.87
	47	59.1	36.52	73.9	46.99	84.5	45.48	85.7	41.37	87.1	41.60	89.7	41.35	92.6	41.73
	50	54.1	35.86	66.2	46.14	75.4	47.96	76.4	44.80	77.7	44.41	80.1	44.19	83.3	43.65
	52	39.4	26.60	53.0	33.12	65.5	37.27	72.1	39.13	72.5	37.84	74.2	37.33	78.4	38.32
100%	-5	64.7	9.41	77.0	12.04	89.7	15.02	95.2	16.59	102.0	16.68	114.7	16.83	121.1	16.98
	0	64.7	9.42	77.0	12.07	89.7	15.04	95.2	16.62	102.0	16.71	114.7	16.86	121.1	17.01
	4	64.7	9.46	77.0	12.11	89.7	15.10	95.2	16.69	102.0	16.77	114.7	16.92	121.1	17.07
	7	64.7	9.63	77.0	12.34	89.7	15.38	95.2	16.99	102.0	17.08	114.7	17.23	121.1	17.39
	10	64.7	10.66	77.0	12.95	89.7	15.32	95.2	16.54	102.0	17.86	114.7	20.22	121.2	21.01
	12	64.7	10.80	77.0	13.12	89.7	15.52	95.2	16.76	102.0	18.21	114.7	20.57	119.5	20.84
	14	64.7	10.99	77.0	13.35	89.7	15.79	95.2	17.07	102.0	18.54	114.7	20.92	118.1	20.68
	16	64.7	11.24	77.0	13.65	89.7	16.14	95.2	17.45	102.0	18.96	114.3	21.39	116.4	21.14
	18	64.7	11.49	77.0	13.96	89.7	16.46	95.2	17.79	102.0	19.33	112.6	21.81	115.0	22.14
	20	64.7	11.66	77.0	14.17	89.7	17.00	95.2	18.72	102.0	20.56	110.9	22.95	113.3	23.30
	21	64.7	11.78	77.0	14.31	89.7	17.58	95.2	19.36	102.0	21.26	110.2	23.74	112.6	23.95
	23	64.7	12.08	77.0	15.29	89.7	18.90	95.2	20.82	102.0	22.86	108.9	25.12	110.9	25.34
	25	64.7	12.85	77.0	16.27	89.7	20.11	95.2	22.15	102.0	24.45	107.2	26.03	109.6	26.26
	27	64.7	13.73	77.0	17.38	89.7	21.58	95.2	23.77	102.0	26.23	105.5	26.95	107.8	27.19
	29	64.7	14.55	77.0	18.57	89.7	23.08	95.2	25.42	101.7	27.79	104.0	28.24	106.4	28.50
	31	64.7	15.48	77.0	19.77	89.7	24.60	95.2	27.39	100.4	28.92	101.6	29.39	104.8	29.66
	33	64.7	16.46	77.0	21.06	89.7	26.23	95.2	28.98	98.6	29.97	101.1	30.24	103.3	30.51
	35	64.7	17.52	77.0	22.43	89.7	27.96	95.2	30.90	96.9	31.05	99.2	31.33	101.6	31.62
	37	64.7	18.65	77.0	23.89	89.7	29.78	94.2	32.01	95.7	32.17	97.8	32.40	100.2	32.69
	39	64.7	19.87	77.0	25.44	89.7	31.72	92.9	33.07	93.4	33.23	96.5	33.47	97.8	33.77
	41	61.2	22.07	73.2	28.26	85.2	35.24	91.1	35.84	92.1	36.02	94.5	36.35	96.8	36.67
	43	57.8	23.01	69.5	29.48	83.2	37.14	89.4	38.10	90.9	37.39	92.4	37.28	95.9	37.61
	44	56.9	24.00	69.3	30.73	81.2	39.15	87.2	40.48	88.5	38.82	90.9	38.23	93.5	38.57
	47	53.7	31.93	67.0	40.89	78.5	41.11	84.2	41.10	85.3	41.30	87.8	41.05	90.4	41.42
	50	49.2	31.35	60.1	40.15	70.1	43.34	75.1	44.50	76.1	44.10	78.4	43.87	81.3	43.31
	52	38.7	24.22	52.0	30.15	64.4	33.92	70.9	35.62	71.2	34.44	72.9	33.98	77.0	34.89

GMV X DC Inverter VRF Units

TC—Total capacity of outdoor unit; PI—Power input of outdoor unit															
Connection ratio	Outdoor air temp. (℃ DB)	Indoor air temp.													
		14.0℃ WB		17.0℃ WB		18.0℃ WB		19.0℃ WB		20.0℃ WB		22.0℃ WB		24.0℃ WB	
		20.0℃ DB		24.0℃ DB		26.0℃ DB		27.0℃ DB		28.0℃ DB		30.0℃ DB		32.0℃ DB	
		TC	PI	TC	PI	TC	PI	TC	PI	TC	PI	TC	PI	TC	PI
		kW	kW	kW	kW	kW	kW	kW	kW	kW	kW	kW	kW	kW	kW
90%	-5	58.2	8.21	69.3	10.39	80.7	12.82	86.3	14.17	91.8	15.59	103.1	16.68	114.4	16.83
	0	58.2	8.22	69.3	10.41	80.7	12.85	86.3	14.20	91.8	15.62	103.1	16.71	114.4	16.86
	4	58.2	8.25	69.3	10.45	80.7	12.90	86.3	14.25	91.8	15.67	103.1	16.77	114.4	16.92
	7	58.2	8.41	69.3	10.64	80.7	13.13	86.3	14.51	91.8	15.97	103.1	17.08	114.4	17.24
	10	58.2	9.30	69.3	11.17	80.7	13.08	86.3	14.74	91.8	15.69	103.2	17.98	114.3	20.37
	12	58.2	9.42	69.3	11.32	80.7	13.25	86.3	14.93	91.8	16.00	103.2	18.29	114.3	20.64
	14	58.2	9.59	69.3	11.51	80.7	13.48	86.3	15.16	91.8	16.27	103.2	18.60	114.3	20.97
	16	58.2	9.80	69.3	11.77	80.7	13.79	86.3	15.50	91.8	16.64	103.2	19.02	114.0	21.38
	18	58.2	10.02	69.3	12.04	80.7	14.05	86.3	15.80	91.8	16.96	103.2	19.47	113.0	22.15
	20	58.2	10.18	69.3	12.22	80.7	14.52	86.3	16.12	91.8	17.67	103.2	20.91	110.9	23.08
	21	58.2	10.28	69.3	12.35	80.7	15.01	86.3	16.66	91.8	18.27	103.2	21.63	110.2	23.60
	23	58.2	10.54	69.3	13.19	80.7	16.14	86.3	17.92	91.8	19.56	103.2	23.23	108.5	24.81
	25	58.2	11.22	69.3	14.03	80.7	17.18	86.3	19.12	91.8	20.92	103.2	24.85	107.2	25.82
	27	58.2	11.98	69.3	14.99	80.7	18.43	86.3	20.41	91.8	22.40	103.2	26.52	105.5	26.95
	29	58.2	12.69	69.3	16.02	80.7	19.71	86.3	21.80	91.8	23.90	102.0	27.80	104.1	28.05
	31	58.2	13.50	69.3	17.06	80.7	21.01	86.3	23.27	91.8	25.51	100.3	28.80	102.4	29.18
	33	58.2	14.36	69.3	18.16	80.7	22.40	86.3	24.75	91.8	27.14	98.9	29.97	101.0	30.24
	35	58.2	15.28	69.3	19.34	80.7	23.88	86.3	26.39	91.8	29.03	97.2	31.06	99.3	31.34
	37	58.2	16.28	69.3	20.60	80.7	25.43	84.7	27.34	91.8	31.06	95.5	32.18	97.9	32.09
	39	58.2	17.33	69.3	21.94	80.7	27.09	83.6	28.24	91.8	32.92	94.2	33.37	96.2	33.28
	41	55.0	19.26	65.9	24.37	76.7	30.09	82.0	30.61	87.3	33.67	92.6	36.03	94.6	36.35
	43	52.0	20.08	62.6	25.40	74.6	31.73	80.5	32.53	85.6	34.96	91.0	36.95	93.1	37.34
	44	51.3	20.94	62.4	26.50	73.1	33.43	78.5	34.57	83.8	36.28	89.1	37.89	91.3	38.23
	47	48.3	27.86	60.3	35.26	70.6	35.11	75.8	35.10	80.8	38.61	86.1	40.69	88.4	41.05
	50	44.3	27.35	54.1	34.63	63.1	37.02	67.6	38.00	72.1	41.22	76.8	43.48	79.4	42.93
	52	34.8	22.58	46.8	28.11	57.9	31.63	63.8	33.21	64.1	32.11	66.4	31.68	69.3	32.53
80%	-5	51.8	7.09	61.6	8.74	71.8	10.87	76.7	11.96	81.5	13.08	91.8	15.52	101.7	16.63
	0	51.8	7.10	61.6	8.76	71.8	10.89	76.7	11.99	81.5	13.10	91.8	15.55	101.7	16.66
	4	51.8	7.13	61.6	8.79	71.8	10.93	76.7	12.03	81.5	13.15	91.8	15.61	101.7	16.72
	7	51.8	7.26	61.6	8.96	71.8	11.13	76.7	12.25	81.5	13.39	91.8	15.90	101.7	17.03
	10	51.8	8.45	61.6	10.12	71.8	11.91	76.7	12.83	81.6	13.73	91.7	15.69	101.7	18.22
	12	51.8	8.58	61.6	10.29	71.8	12.12	76.7	13.08	81.6	14.00	91.7	15.96	101.7	18.08
	14	51.8	8.75	61.6	10.49	71.8	12.33	76.7	13.28	81.6	14.26	91.7	16.24	101.7	18.48
	16	51.8	8.87	61.6	10.66	71.8	12.58	76.7	13.53	81.6	14.47	91.7	16.60	101.7	19.15
	18	51.8	9.04	61.6	10.87	71.8	12.86	76.7	13.83	81.6	14.75	91.7	16.98	101.7	20.48
	20	51.8	9.20	61.6	11.08	71.8	13.08	76.7	14.08	81.6	15.09	91.7	17.59	101.7	21.23
	21	51.8	9.29	61.6	11.16	71.8	13.20	76.7	14.24	81.6	15.42	91.7	18.23	101.7	22.73
	23	51.8	9.45	61.6	11.41	71.8	13.83	76.7	15.16	81.6	16.50	91.7	19.50	101.7	24.31
	25	51.8	9.74	61.6	12.12	71.8	14.78	76.7	16.20	81.6	17.61	91.7	20.88	101.7	25.94
	27	51.8	10.37	61.6	12.91	71.8	15.74	76.7	17.28	81.6	18.89	91.7	22.28	101.7	26.85
	29	51.8	11.04	61.6	13.74	71.8	16.78	76.7	18.41	81.3	20.14	91.7	23.78	101.7	27.83
	31	51.8	11.70	61.6	14.62	71.8	17.87	76.7	19.61	81.3	21.47	91.7	25.38	100.0	28.84
	33	51.8	12.45	61.6	16.28	71.8	19.03	76.7	20.90	81.3	22.87	91.7	27.08	98.6	29.88
	35	51.8	13.20	61.6	16.28	71.8	20.24	76.7	22.28	81.3	24.35	91.7	28.90	96.9	30.97
	37	51.8	13.99	61.6	17.53	71.8	21.53	75.3	23.73	81.3	25.93	91.7	30.78	95.5	32.11
	39	51.8	14.83	61.6	18.61	71.8	22.90	74.3	25.27	81.3	27.62	91.7	32.78	93.8	33.30
	41	48.9	16.63	58.5	20.52	68.2	25.50	72.9	25.84	77.4	28.25	87.3	33.53	92.3	35.92
	43	46.2	17.33	56.8	21.41	66.4	26.86	71.5	27.48	75.7	29.32	85.6	34.39	90.9	36.84
	44	45.6	18.09	55.5	22.31	64.9	28.33	69.8	29.19	74.3	30.44	84.0	35.26	89.1	37.78
	47	43.0	24.07	53.6	29.68	62.8	29.75	67.3	29.63	71.6	32.39	81.2	37.86	86.2	40.57
	50	39.3	23.63	48.1	29.15	56.0	31.37	60.1	32.08	63.9	34.58	72.5	40.47	77.5	42.43
	52	31.0	19.05	41.6	23.72	51.5	26.69	56.7	28.02	57.0	27.10	58.3	26.73	61.6	27.45

TC—Total capacity of outdoor unit; PI—Power input of outdoor unit															
Connection ratio	Outdoor air temp. (℃ DB)	Indoor air temp.													
		14.0℃ WB		17.0℃ WB		18.0℃ WB		19.0℃ WB		20.0℃ WB		22.0℃ WB		24.0℃ WB	
		20.0℃ DB		24.0℃ DB		26.0℃ DB		27.0℃ DB		28.0℃ DB		30.0℃ DB		32.0℃ DB	
		TC	PI	TC	PI	TC	PI	TC	PI	TC	PI	TC	PI	TC	PI
		kW	kW	kW	kW	kW	kW	kW	kW	kW	kW	kW	kW	kW	kW
70%	-5	45.3	6.04	53.9	7.47	62.8	9.06	67.1	9.93	71.6	10.82	80.1	12.75	89.0	14.83
	0	45.3	6.05	53.9	7.48	62.8	9.07	67.1	9.95	71.6	10.84	80.1	12.77	89.0	14.85
	4	45.3	6.07	53.9	7.51	62.8	9.11	67.1	9.98	71.6	10.88	80.1	12.82	89.0	14.91
	7	45.3	6.18	53.9	7.65	62.8	9.28	67.1	10.17	71.6	11.09	80.1	13.06	89.0	15.19
	10	45.3	7.45	53.9	8.83	62.8	10.29	67.1	11.08	71.4	11.87	80.3	13.49	89.0	15.16
	12	45.3	7.54	53.9	8.95	62.8	10.49	67.1	11.29	71.4	12.08	80.3	13.74	89.0	15.45
	14	45.3	7.66	53.9	9.12	62.8	10.66	67.1	11.45	71.4	12.29	80.3	13.99	89.0	15.74
	16	45.3	7.79	53.9	9.29	62.8	10.87	67.1	11.70	71.4	12.53	80.3	14.24	89.0	16.03
	18	45.3	7.91	53.9	9.45	62.8	11.08	67.1	11.91	71.4	12.74	80.3	14.53	89.0	16.37
	20	45.3	8.04	53.9	9.62	62.8	11.29	67.1	12.12	71.4	12.99	80.3	14.83	89.0	16.82
	21	45.3	8.12	53.9	9.70	62.8	11.37	67.1	12.24	71.4	13.12	80.3	14.99	89.0	17.41
	23	45.3	8.25	53.9	9.87	62.8	11.62	67.1	12.66	71.4	13.78	80.3	16.12	89.0	18.66
	25	45.3	8.41	53.9	10.29	62.8	12.37	67.1	13.53	71.4	14.70	80.3	17.24	89.0	19.95
	27	45.3	8.91	53.9	10.95	62.8	13.20	67.1	14.41	71.4	15.70	80.3	18.41	89.0	21.32
	29	45.3	9.45	53.9	11.62	62.8	14.03	67.1	15.37	71.4	16.70	80.3	19.61	89.0	22.78
	31	45.3	9.99	53.9	12.33	62.8	14.95	67.1	16.32	71.4	17.78	80.3	20.91	89.0	24.28
	33	45.3	10.62	53.9	13.12	62.8	15.91	67.1	17.37	71.4	18.95	80.3	22.28	89.0	25.90
	35	45.3	11.24	53.9	13.91	62.8	16.87	67.1	18.49	71.4	20.16	80.3	23.74	89.0	27.61
	37	45.3	11.87	53.9	14.74	62.8	17.95	65.9	19.66	71.4	21.45	80.3	25.28	89.0	29.40
	39	45.3	12.58	53.9	15.62	62.8	19.03	65.0	20.86	71.4	22.78	80.3	26.86	89.0	31.32
	41	42.8	14.17	51.2	17.53	59.7	21.25	63.8	21.45	67.9	23.38	76.4	27.54	84.8	32.03
	43	40.5	14.77	49.6	18.29	57.5	22.39	62.6	22.80	64.6	24.26	75.0	28.23	82.5	32.85
	44	39.9	15.40	48.5	19.06	56.8	23.61	61.1	24.22	65.2	25.19	73.5	28.96	81.9	33.68
	47	37.6	20.50	46.9	25.36	54.9	24.79	58.9	24.59	62.8	26.81	71.0	31.10	79.2	36.17
	50	34.4	20.13	42.1	24.90	49.0	26.14	52.5	26.63	56.1	28.62	63.4	33.23	71.2	37.83
	52	27.1	15.81	36.4	19.68	45.1	21.95	49.6	23.26	49.9	22.49	51.0	22.19	53.9	22.78
60%	-5	38.8	5.08	46.2	6.19	53.8	7.42	57.5	8.10	61.3	8.79	68.8	10.26	76.4	11.85
	0	38.8	5.09	46.2	6.21	53.8	7.44	57.5	8.11	61.3	8.81	68.8	10.28	76.4	11.87
	4	38.8	5.10	46.2	6.23	53.8	7.47	57.5	8.14	61.3	8.84	68.8	10.32	76.4	11.92
	7	38.8	5.20	46.2	6.34	53.8	7.60	57.5	8.29	61.3	9.00	68.8	10.51	76.4	12.14
	10	38.8	6.45	46.2	7.58	53.8	8.79	57.5	9.41	61.2	10.04	68.8	11.37	76.4	12.74
	12	38.8	6.58	46.2	7.70	53.8	8.95	57.5	9.58	61.2	10.20	68.8	11.58	76.4	12.95
	14	38.8	6.66	46.2	7.83	53.8	9.08	57.5	9.74	61.2	10.41	68.8	11.79	76.4	13.20
	16	38.8	6.75	46.2	7.95	53.8	9.25	57.5	9.91	61.2	10.58	68.8	11.99	76.4	13.45
	18	38.8	6.87	46.2	8.08	53.8	9.41	57.5	10.08	61.2	10.79	68.8	12.20	76.4	13.70
	20	38.8	6.95	46.2	8.25	53.8	9.58	57.5	10.29	61.2	10.99	68.8	12.45	76.4	13.99
	21	38.8	7.04	46.2	8.29	53.8	9.66	57.5	10.37	61.2	11.08	68.8	12.58	76.4	14.12
	23	38.8	7.12	46.2	8.45	53.8	9.83	57.5	10.58	61.2	11.29	68.8	13.08	76.4	15.03
	25	38.8	7.25	46.2	8.62	53.8	10.20	57.5	11.08	61.2	11.99	68.8	13.95	76.4	16.03
	27	38.8	7.54	46.2	9.12	53.8	10.87	57.5	11.83	61.2	12.78	68.8	14.87	76.4	17.12
	29	38.8	7.95	46.2	9.66	53.8	11.58	57.5	12.58	61.2	13.62	68.8	15.87	76.4	18.28
	31	38.8	8.45	46.2	10.29	53.8	12.29	57.5	13.37	61.2	14.49	68.8	16.87	76.4	19.45
	33	38.8	8.91	46.2	10.87	53.8	13.03	57.5	14.20	61.2	15.41	68.8	17.95	76.4	20.74
	35	38.8	9.45	46.2	11.54	53.8	13.83	57.5	15.08	61.2	16.37	68.8	19.11	76.4	22.07
	37	38.8	9.99	46.2	12.20	53.8	14.66	56.5	15.99	61.2	17.37	68.8	20.32	76.4	23.49
	39	38.8	10.54	46.2	12.91	53.8	15.53	55.7	16.95	61.2	18.45	68.8	21.57	76.4	24.99
	41	36.7	11.91	43.9	14.53	51.1	17.42	54.7	17.49	58.2	18.98	65.5	22.17	72.8	25.60
	43	34.7	12.42	41.7	15.15	49.6	18.36	53.6	18.58	56.5	19.71	64.7	22.73	71.2	26.27
	44	34.2	12.95	41.6	15.80	48.7	19.36	52.3	19.75	55.9	20.46	63.0	23.32	70.2	26.93
	47	32.2	17.23	40.2	21.03	47.1	20.32	50.5	20.05	53.9	21.77	60.9	25.04	68.0	28.91
	50	29.5	16.92	36.1	20.65	42.0	21.43	45.0	21.71	48.1	23.24	54.3	26.76	61.1	30.24
	52	23.2	12.89	31.2	16.05	38.6	18.06	42.5	18.96	42.7	18.34	43.8	18.09	46.2	18.57

GMV X DC Inverter VRF Units

TC—Total capacity of outdoor unit; PI—Power input of outdoor unit															
Connection ratio	Outdoor air temp. (℃ DB)	Indoor air temp.													
		14.0℃ WB		17.0℃ WB		18.0℃ WB		19.0℃ WB		20.0℃ WB		22.0℃ WB		24.0℃ WB	
		20.0℃ DB		24.0℃ DB		26.0℃ DB		27.0℃ DB		28.0℃ DB		30.0℃ DB		32.0℃ DB	
		TC	PI	TC	PI	TC	PI	TC	PI	TC	PI	TC	PI	TC	PI
		kW	kW	kW	kW	kW	kW	kW	kW	kW	kW	kW	kW	kW	kW
50%	-5	32.4	4.20	38.5	5.03	44.9	5.95	47.9	6.44	51.0	6.95	57.3	8.05	63.7	9.21
	0	32.4	4.21	38.5	5.04	44.9	5.96	47.9	6.45	51.0	6.97	57.3	8.07	63.7	9.23
	4	32.4	4.23	38.5	5.06	44.9	5.98	47.9	6.48	51.0	6.99	57.3	8.10	63.7	9.27
	7	32.4	4.31	38.5	5.15	44.9	6.09	47.9	6.60	51.0	7.12	57.3	8.25	63.7	9.44
	10	32.4	5.58	38.5	6.45	44.9	7.37	47.9	7.87	51.0	8.33	57.3	9.37	63.7	10.45
	12	32.4	5.62	38.5	6.54	44.9	7.50	47.9	7.95	51.0	8.50	57.3	9.54	63.7	10.62
	14	32.4	5.71	38.5	6.62	44.9	7.58	47.9	8.12	51.0	8.62	57.3	9.70	63.7	10.83
	16	32.4	5.79	38.5	6.70	44.9	7.70	47.9	8.25	51.0	8.75	57.3	9.87	63.7	10.99
	18	32.4	5.87	38.5	6.83	44.9	7.83	47.9	8.37	51.0	8.91	57.3	10.04	63.7	11.20
	20	32.4	5.96	38.5	6.91	44.9	7.95	47.9	8.54	51.0	9.08	57.3	10.24	63.7	11.41
	21	32.4	6.00	38.5	7.00	44.9	8.04	47.9	8.58	51.0	9.16	57.3	10.33	63.7	11.54
	23	32.4	6.08	38.5	7.08	44.9	8.16	47.9	8.75	51.0	9.33	57.3	10.49	63.7	11.79
	25	32.4	6.16	38.5	7.20	44.9	8.33	47.9	8.91	51.0	9.62	57.3	11.04	63.7	12.58
	27	32.4	6.29	38.5	7.50	44.9	8.79	47.9	9.49	51.0	10.20	57.3	11.74	63.7	13.41
	29	32.4	6.62	38.5	7.91	44.9	9.33	47.9	10.08	50.8	10.87	57.3	12.49	63.7	14.28
	31	32.4	7.00	38.5	8.37	44.9	9.95	47.9	10.70	50.8	11.54	57.3	13.28	63.7	15.20
	33	32.4	7.41	38.5	8.87	44.9	10.49	47.9	11.33	50.8	12.24	57.3	14.12	63.7	16.16
	35	32.4	7.83	38.5	9.37	44.9	11.08	47.9	11.99	50.8	12.95	57.3	14.99	63.7	17.16
	37	32.4	8.25	38.5	9.91	44.9	11.74	47.1	12.70	50.8	13.74	57.3	15.91	63.7	18.24
	39	32.4	8.70	38.5	10.45	44.9	12.41	46.4	13.45	50.8	14.58	57.3	16.87	63.7	19.36
	41	30.6	9.86	36.6	11.81	42.6	13.96	45.6	13.91	48.4	15.02	54.6	17.39	60.7	19.90
	43	28.9	10.30	34.8	12.39	41.4	14.70	44.7	14.91	47.6	15.61	53.1	17.84	59.2	20.42
	44	28.5	10.73	34.7	12.84	40.6	15.51	43.6	15.71	46.4	16.19	52.5	18.29	58.6	20.93
	47	26.9	14.27	33.5	17.08	39.2	16.28	42.1	15.95	44.7	17.23	50.7	19.64	56.7	22.48
	50	24.6	14.01	30.0	16.77	35.0	17.17	37.5	17.27	39.9	18.39	45.3	20.99	50.9	23.51
	52	19.3	10.26	26.0	12.77	32.2	14.37	35.4	15.08	35.6	14.59	36.5	14.39	38.5	14.78

GMV-1010WM/B-X(P)

TC—Total capacity of outdoor unit; PI—Power input of outdoor unit															
Connection ratio	Outdoor air temp. (℃ DB)	Indoor air temp.													
		14.0℃ WB		17.0℃ WB		18.0℃ WB		19.0℃ WB		20.0℃ WB		22.0℃ WB		24.0℃ WB	
		20.0℃ DB		24.0℃ DB		26.0℃ DB		27.0℃ DB		28.0℃ DB		30.0℃ DB		32.0℃ DB	
		TC	PI	TC	PI	TC	PI	TC	PI	TC	PI	TC	PI	TC	PI
		kW	kW	kW	kW	kW	kW	kW	kW	kW	kW	kW	kW	kW	kW
135%	-5	89.4	14.86	106.4	18.09	123.5	18.31	128.2	18.41	130.5	18.51	133.9	18.72	137.2	18.92
	0	89.4	14.89	106.4	18.13	123.5	18.34	128.2	18.44	130.5	18.54	133.9	18.76	137.2	18.95
	4	89.4	14.94	106.4	18.19	123.5	18.41	128.2	18.51	130.5	18.61	133.9	18.83	137.2	19.02
	7	89.4	15.22	106.4	18.53	123.5	18.75	128.2	18.85	130.5	18.95	133.9	19.18	137.2	19.38
	10	89.4	15.49	106.4	18.93	123.5	22.51	128.2	23.00	129.7	22.55	132.9	21.60	136.2	20.60
	12	89.4	15.76	106.4	19.29	123.5	22.96	126.4	22.87	128.2	22.42	131.1	21.42	134.4	21.10
	14	89.4	16.08	106.4	19.65	123.1	23.23	125.0	22.78	126.4	22.28	129.7	22.10	132.9	22.32
	16	89.4	16.35	106.4	20.06	121.7	23.14	123.1	22.96	124.6	23.05	127.9	23.28	131.1	23.50
	18	89.4	16.66	106.4	20.47	119.9	24.00	121.3	24.14	123.1	24.27	126.4	24.50	129.7	24.72
	20	89.4	17.03	106.4	21.78	118.1	25.18	119.9	25.31	121.3	25.45	124.6	25.68	127.9	25.95
	21	89.4	17.48	106.4	22.55	117.3	25.77	119.1	25.90	120.6	26.04	123.9	26.31	127.1	26.54
	23	89.4	18.75	106.4	24.18	115.9	26.94	117.3	27.08	118.8	27.22	122.0	27.49	125.3	27.76
	25	89.4	20.02	106.4	25.90	114.1	28.12	115.9	28.26	117.3	28.44	120.6	28.71	123.9	28.98
	27	89.4	21.37	106.4	27.71	112.6	24.77	114.1	29.48	115.5	29.62	118.8	29.93	122.0	30.25
	29	89.4	22.82	106.4	29.62	110.8	30.48	112.2	30.66	114.1	30.84	117.3	31.15	120.6	31.47
	31	89.4	24.36	106.1	31.34	109.0	31.70	110.8	31.88	112.2	32.02	115.5	32.38	118.8	32.74
	33	89.4	25.95	104.2	32.51	107.5	32.83	109.0	33.06	110.8	33.24	114.1	33.60	117.0	34.01
	35	89.4	27.67	102.4	33.69	105.7	34.10	107.5	34.28	109.0	34.46	112.2	34.87	115.5	35.23
	37	89.4	29.43	101.0	34.91	104.2	35.32	105.7	35.50	107.5	35.73	110.4	36.14	113.7	36.54
	39	89.4	31.34	99.2	36.09	102.4	36.50	104.2	36.72	105.7	36.95	109.0	37.36	112.2	37.81
	41	84.4	34.86	97.3	42.45	100.4	42.96	102.2	39.76	103.6	39.97	106.9	40.45	110.1	40.87
	43	79.8	36.35	95.5	44.25	98.5	45.29	100.2	42.26	101.6	41.50	104.8	41.47	108.0	41.90
	44	78.6	37.91	92.2	46.16	95.7	47.74	97.8	44.91	99.5	43.08	102.8	42.54	106.3	42.98
	47	74.2	50.44	89.1	61.42	92.5	50.12	94.4	45.59	95.9	45.83	99.3	45.68	102.8	46.15
	50	67.9	49.53	79.9	60.31	82.6	52.85	84.2	49.36	85.5	48.93	88.7	48.82	92.4	48.27
	52	43.4	29.31	58.4	36.49	72.2	41.06	79.5	43.11	79.9	41.69	81.8	41.13	86.4	42.23
120%	-5	82.5	13.23	98.1	17.12	114.1	18.19	122.0	18.29	128.4	18.38	131.3	18.58	134.2	18.77
	0	82.5	13.25	98.1	17.15	114.1	18.22	122.0	18.32	128.4	18.42	131.3	18.61	134.2	18.81
	4	82.5	13.30	98.1	17.21	114.1	18.29	122.0	18.39	128.4	18.49	131.3	18.68	134.2	18.88
	7	82.5	13.55	98.1	17.53	114.1	18.63	122.0	18.73	128.4	18.83	131.3	19.03	134.2	19.23
	10	82.5	14.13	98.1	17.25	114.1	20.51	122.0	22.19	127.9	23.14	130.8	22.23	133.7	21.37
	12	82.5	14.40	98.1	17.57	114.1	20.92	122.0	22.60	126.0	23.00	128.9	22.14	131.9	21.24
	14	82.5	14.67	98.1	17.93	114.1	21.33	122.0	23.05	124.2	22.87	127.5	22.01	130.4	22.14
	16	82.5	14.94	98.1	18.29	114.1	21.74	121.3	23.23	122.8	22.91	125.7	23.14	128.6	23.32
	18	82.5	15.22	98.1	18.66	114.1	22.51	119.5	24.00	121.0	24.09	123.9	24.32	127.1	24.54
	20	82.5	15.53	98.1	19.38	114.1	24.18	118.1	25.18	119.5	25.27	122.4	25.49	125.3	25.72
	21	82.5	15.67	98.1	20.06	114.1	25.04	117.0	25.77	118.4	25.86	121.7	26.08	124.6	26.35
	23	82.5	16.75	98.1	21.51	114.1	26.81	115.5	26.90	117.0	27.03	119.9	27.31	122.8	27.53
	25	82.5	17.89	98.1	23.00	112.2	27.98	113.7	28.08	115.1	28.21	118.4	28.48	121.3	28.75
	27	82.5	19.11	98.1	24.59	110.8	29.12	112.2	29.30	113.7	29.43	116.6	29.71	119.5	29.98
	29	82.5	20.38	98.1	26.26	109.0	30.29	110.4	30.48	111.9	30.61	114.8	30.93	118.1	31.20
	31	82.5	21.74	98.1	28.03	107.5	31.52	109.0	31.65	110.4	31.83	113.3	32.15	116.2	32.47
	33	82.5	23.14	98.1	29.93	105.7	32.69	107.2	32.88	108.6	33.01	111.5	33.37	114.4	33.69
	35	82.5	24.63	98.1	31.88	103.9	33.87	105.3	34.05	107.2	34.23	110.1	34.60	113.0	34.96
	37	82.5	26.22	98.1	33.96	102.4	35.09	103.9	35.28	105.3	35.46	108.2	35.82	111.1	36.23
	39	82.5	27.89	97.7	35.86	100.6	36.27	102.1	36.50	103.5	36.68	106.8	37.09	109.7	37.45
	41	77.9	31.04	93.2	40.17	98.7	42.68	100.1	39.50	101.9	39.71	104.8	40.13	107.7	40.55
	43	73.6	32.35	88.8	41.87	96.8	44.97	98.2	41.97	100.3	41.22	102.8	41.15	105.7	41.60
	44	72.6	33.75	88.3	43.67	94.0	47.42	95.9	44.61	97.8	42.79	100.8	42.21	103.9	42.65
	47	68.4	44.91	85.3	58.12	90.9	49.79	92.5	45.29	94.3	45.53	97.4	45.32	100.5	45.80
	50	62.7	44.09	76.5	57.06	81.1	52.50	82.5	49.04	84.1	48.61	86.9	48.43	90.4	47.89
	52	42.5	29.12	57.2	36.25	70.7	40.79	77.9	42.83	78.3	41.42	80.1	40.86	84.6	41.95

GMV X DC Inverter VRF Units

TC—Total capacity of outdoor unit; PI—Power input of outdoor unit															
Connection ratio	Outdoor air temp. (℃ DB)	Indoor air temp.													
		14.0℃ WB		17.0℃ WB		18.0℃ WB		19.0℃ WB		20.0℃ WB		22.0℃ WB		24.0℃ WB	
		20.0℃ DB		24.0℃ DB		26.0℃ DB		27.0℃ DB		28.0℃ DB		30.0℃ DB		32.0℃ DB	
		TC	PI	TC	PI	TC	PI	TC	PI	TC	PI	TC	PI	TC	PI
		kW	kW	kW	kW	kW	kW	kW	kW	kW	kW	kW	kW	kW	kW
110%	-5	75.6	11.70	90.1	15.05	104.6	18.07	111.9	18.16	119.1	18.26	128.4	18.43	131.1	18.60
	0	75.6	11.72	90.1	15.08	104.6	18.10	111.9	18.20	119.1	18.30	128.4	18.47	131.1	18.64
	4	75.6	11.76	90.1	15.14	104.6	18.17	111.9	18.27	119.1	18.36	128.4	18.54	131.1	18.71
	7	75.6	11.98	90.1	15.42	104.6	18.50	111.9	18.60	119.1	18.70	128.4	18.88	131.1	19.05
	10	75.6	12.82	90.1	15.62	104.6	18.57	111.9	20.06	119.1	21.60	128.2	22.91	131.1	22.14
	12	75.6	13.09	90.1	15.94	104.6	18.93	111.9	20.47	119.1	22.01	126.8	22.82	129.3	22.01
	14	75.6	13.31	90.1	16.21	104.6	19.29	111.9	20.83	119.1	22.42	125.0	22.82	127.9	21.96
	16	75.6	13.54	90.1	16.53	104.6	19.65	111.9	21.24	119.1	22.87	123.5	22.96	126.0	23.18
	18	75.6	13.81	90.1	16.85	104.6	20.06	111.9	21.83	119.1	23.95	121.7	24.14	124.6	24.36
	20	75.6	14.08	90.1	17.21	104.6	21.24	111.9	23.46	117.3	25.13	120.2	25.31	122.8	25.54
	21	75.6	14.22	90.1	17.71	104.6	22.01	111.9	24.32	116.6	25.72	119.1	25.90	122.0	26.13
	23	75.6	14.90	90.1	18.97	104.6	23.59	111.9	26.08	114.8	26.85	117.7	27.12	120.2	27.35
	25	75.6	15.85	90.1	20.29	104.6	25.22	111.9	27.94	113.3	28.03	115.9	28.30	118.8	28.53
	27	75.6	16.94	90.1	21.69	104.6	26.99	110.1	29.12	111.5	29.21	114.4	29.48	117.0	29.75
	29	75.6	18.07	90.1	23.14	104.6	28.85	108.6	30.29	110.1	30.43	112.6	30.70	115.5	30.97
	31	75.6	19.25	90.1	24.68	104.6	30.79	106.8	31.47	108.2	31.61	111.1	31.88	113.7	32.20
	33	75.6	20.47	90.1	26.31	103.9	32.47	105.3	32.65	106.8	32.78	109.3	33.10	112.2	33.42
	35	75.6	21.78	90.1	28.03	102.4	33.65	103.5	33.83	105.0	34.01	107.5	34.32	110.4	34.64
	37	75.6	23.18	90.1	29.84	100.6	34.87	102.1	35.00	103.2	35.18	106.1	35.55	108.6	35.86
	39	75.6	24.63	90.1	31.79	98.8	36.05	100.3	36.23	101.7	36.41	104.2	36.77	107.2	37.13
	41	71.4	27.44	85.6	35.32	97.3	42.39	98.4	39.24	99.8	39.45	102.4	39.82	105.2	40.18
	43	67.5	28.62	81.3	36.83	95.9	44.68	96.6	41.72	98.0	40.95	100.5	40.83	103.3	41.19
	44	66.5	29.84	81.1	38.40	92.7	47.10	94.2	44.31	95.8	42.51	98.5	41.88	101.6	42.26
	47	62.7	39.71	78.4	51.10	89.6	49.46	90.9	44.99	92.4	45.23	95.2	44.97	98.3	45.38
	50	57.4	38.99	70.3	50.17	80.0	52.15	81.1	48.71	82.4	48.29	84.9	48.05	88.3	47.46
	52	41.8	28.93	56.2	36.01	69.5	40.52	76.5	42.54	76.9	41.14	78.8	40.59	83.2	41.67
100%	-5	68.7	10.23	81.7	13.10	95.2	16.33	101.0	18.04	108.2	18.13	121.7	18.30	128.5	18.46
	0	68.7	10.25	81.7	13.12	95.2	16.36	101.0	18.08	108.2	18.17	121.7	18.33	128.5	18.50
	4	68.7	10.29	81.7	13.17	95.2	16.42	101.0	18.14	108.2	18.23	121.7	18.40	128.5	18.56
	7	68.7	10.48	81.7	13.41	95.2	16.72	101.0	18.48	108.2	18.57	121.7	18.74	128.5	18.91
	10	68.7	11.59	81.7	14.08	95.2	16.66	101.0	17.99	108.2	19.42	121.6	21.98	128.6	22.84
	12	68.7	11.75	81.7	14.27	95.2	16.88	101.0	18.22	108.2	19.80	121.6	22.36	126.7	22.66
	14	68.7	11.95	81.7	14.52	95.2	17.17	101.0	18.56	108.2	20.16	121.6	22.75	125.3	22.48
	16	68.7	12.22	81.7	14.84	95.2	17.56	101.0	18.97	108.2	20.62	121.2	23.26	123.5	22.99
	18	68.7	12.49	81.7	15.18	95.2	17.90	101.0	19.34	108.2	21.01	119.5	23.71	122.0	24.07
	20	68.7	12.68	81.7	15.41	95.2	18.49	101.0	20.36	108.2	22.36	117.7	24.96	120.2	25.34
	21	68.7	12.81	81.7	15.56	95.2	19.12	101.0	21.06	108.2	23.12	117.0	25.81	119.5	26.04
	23	68.7	13.14	81.7	16.63	95.2	20.56	101.0	22.64	108.2	24.86	115.5	27.31	117.7	27.56
	25	68.7	13.98	81.7	17.69	95.2	21.87	101.0	24.09	108.2	26.59	113.7	28.30	116.2	28.56
	27	68.7	14.93	81.7	18.90	95.2	23.46	101.0	25.84	108.2	28.53	111.9	29.30	114.4	29.56
	29	68.7	15.82	81.7	20.19	95.2	25.10	101.0	27.64	107.9	30.22	110.4	30.71	112.9	30.99
	31	68.7	16.83	81.7	21.50	95.2	26.75	101.0	29.78	106.5	31.45	107.8	31.96	111.1	32.25
	33	68.7	17.90	81.7	22.90	95.2	28.52	101.0	31.52	104.6	32.59	107.3	32.88	109.6	33.18
	35	68.7	19.05	81.7	24.39	95.2	30.41	101.0	33.60	102.8	33.77	105.3	34.07	107.8	34.38
	37	68.7	20.28	81.7	25.97	95.2	32.38	99.9	34.81	101.5	34.98	103.7	35.23	106.3	35.55
	39	68.7	21.60	81.7	27.66	95.2	34.49	98.5	35.96	99.1	36.14	102.4	36.39	103.7	36.72
	41	64.9	24.00	77.6	30.73	90.4	38.31	96.7	38.98	97.8	39.17	100.2	39.52	102.7	39.88
	43	61.3	25.02	73.8	32.06	88.3	40.38	94.9	41.43	96.5	40.66	98.1	40.54	101.8	40.90
	44	60.4	26.09	73.6	33.41	86.1	42.57	92.6	44.02	93.9	42.21	96.4	41.57	99.2	41.94
	47	57.0	34.72	71.1	44.46	83.3	44.70	89.3	44.69	90.5	44.91	93.2	44.63	95.9	45.04
	50	52.2	34.09	63.7	43.65	74.3	47.13	79.6	48.38	80.7	47.95	83.2	47.70	86.2	47.10
	52	41.0	26.33	55.2	32.78	68.3	36.89	75.2	38.73	75.6	37.45	77.4	36.95	81.7	37.94

TC—Total capacity of outdoor unit; PI—Power input of outdoor unit															
Connection ratio	Outdoor air temp. (℃ DB)	Indoor air temp.													
		14.0℃ WB		17.0℃ WB		18.0℃ WB		19.0℃ WB		20.0℃ WB		22.0℃ WB		24.0℃ WB	
		20.0℃ DB		24.0℃ DB		26.0℃ DB		27.0℃ DB		28.0℃ DB		30.0℃ DB		32.0℃ DB	
		TC	PI	TC	PI	TC	PI	TC	PI	TC	PI	TC	PI	TC	PI
		kW	kW	kW	kW	kW	kW	kW	kW	kW	kW	kW	kW	kW	kW
90%	-5	61.8	8.92	73.6	11.30	85.6	13.95	91.5	15.41	97.3	16.95	109.3	18.14	121.3	18.30
	0	61.8	8.94	73.6	11.32	85.6	13.97	91.5	15.44	97.3	16.98	109.3	18.17	121.3	18.33
	4	61.8	8.97	73.6	11.36	85.6	14.02	91.5	15.49	97.3	17.04	109.3	18.24	121.3	18.40
	7	61.8	9.14	73.6	11.57	85.6	14.28	91.5	15.78	97.3	17.36	109.3	18.58	121.3	18.74
	10	61.8	10.11	73.6	12.15	85.6	14.23	91.5	16.03	97.4	17.06	109.5	19.55	121.3	22.15
	12	61.8	10.25	73.6	12.31	85.6	14.41	91.5	16.24	97.4	17.39	109.5	19.89	121.3	22.44
	14	61.8	10.42	73.6	12.52	85.6	14.66	91.5	16.48	97.4	17.69	109.5	20.23	121.3	22.81
	16	61.8	10.66	73.6	12.80	85.6	14.99	91.5	16.86	97.4	18.09	109.5	20.69	120.9	23.25
	18	61.8	10.90	73.6	13.09	85.6	15.28	91.5	17.18	97.4	18.44	109.5	21.17	119.8	24.09
	20	61.8	11.07	73.6	13.29	85.6	15.79	91.5	17.53	97.4	19.21	109.5	22.74	117.7	25.09
	21	61.8	11.18	73.6	13.42	85.6	16.33	91.5	18.12	97.4	19.87	109.5	23.52	117.0	25.66
	23	61.8	11.46	73.6	14.34	85.6	17.56	91.5	19.48	97.4	21.27	109.5	25.26	115.1	26.98
	25	61.8	12.20	73.6	15.26	85.6	18.68	91.5	20.79	97.4	22.75	109.5	27.02	113.7	28.08
	27	61.8	13.03	73.6	16.30	85.6	20.04	91.5	22.19	97.4	24.36	109.5	28.83	111.9	29.31
	29	61.8	13.80	73.6	17.42	85.6	21.43	91.5	23.71	97.4	25.99	108.2	30.22	110.4	30.50
	31	61.8	14.68	73.6	18.55	85.6	22.85	91.5	25.30	97.4	27.74	106.4	31.32	108.6	31.73
	33	61.8	15.62	73.6	19.75	85.6	24.36	91.5	26.92	97.4	29.51	105.0	32.59	107.2	32.88
	35	61.8	16.62	73.6	21.03	85.6	25.97	91.5	28.69	97.4	31.56	103.2	33.77	105.3	34.08
	37	61.8	17.70	73.6	22.40	85.6	27.66	89.9	29.73	97.4	33.77	101.3	34.99	103.9	34.90
	39	61.8	18.85	73.6	23.86	85.6	29.45	88.7	30.71	97.4	35.80	99.9	36.28	102.1	36.19
	41	58.4	20.94	69.9	26.50	81.4	32.72	87.0	33.29	92.6	36.61	98.2	39.18	100.4	39.53
	43	55.2	21.83	66.4	27.62	79.2	34.50	85.4	35.37	90.8	38.01	96.6	40.18	98.7	40.61
	44	54.4	22.77	66.2	28.82	77.5	36.36	83.3	37.59	88.9	39.45	94.5	41.20	96.9	41.57
	47	51.3	30.29	64.0	38.35	74.9	38.17	80.4	38.16	85.7	41.98	91.3	44.24	93.8	44.64
	50	47.0	29.74	57.4	37.65	66.9	40.25	71.7	41.32	76.5	44.82	81.5	47.28	84.3	46.69
	52	36.9	24.55	49.7	30.56	61.5	34.39	67.7	36.11	68.0	34.92	70.5	34.45	73.6	35.37
80%	-5	54.9	7.71	65.4	9.51	76.1	11.82	81.4	13.01	86.4	14.22	97.3	16.88	107.9	18.08
	0	54.9	7.72	65.4	9.53	76.1	11.84	81.4	13.03	86.4	14.25	97.3	16.91	107.9	18.12
	4	54.9	7.75	65.4	9.56	76.1	11.88	81.4	13.08	86.4	14.30	97.3	16.97	107.9	18.18
	7	54.9	7.90	65.4	9.74	76.1	12.10	81.4	13.32	86.4	14.56	97.3	17.29	107.9	18.52
	10	54.9	9.19	65.4	11.00	76.1	12.95	81.4	13.95	86.6	14.93	97.3	17.06	107.9	19.81
	12	54.9	9.33	65.4	11.18	76.1	13.18	81.4	14.22	86.6	15.22	97.3	17.36	107.9	19.66
	14	54.9	9.51	65.4	11.41	76.1	13.40	81.4	14.45	86.6	15.50	97.3	17.66	107.9	20.10
	16	54.9	9.65	65.4	11.59	76.1	13.68	81.4	14.72	86.6	15.74	97.3	18.05	107.9	20.83
	18	54.9	9.83	65.4	11.82	76.1	13.98	81.4	15.03	86.6	16.04	97.3	18.46	107.9	22.27
	20	54.9	10.01	65.4	12.05	76.1	14.22	81.4	15.31	86.6	16.40	97.3	19.13	107.9	23.08
	21	54.9	10.10	65.4	12.14	76.1	14.35	81.4	15.49	86.6	16.77	97.3	19.82	107.9	24.71
	23	54.9	10.28	65.4	12.41	76.1	15.03	81.4	16.48	86.6	17.94	97.3	21.20	107.9	26.43
	25	54.9	10.60	65.4	13.18	76.1	16.08	81.4	17.62	86.6	19.14	97.3	22.70	107.9	28.21
	27	54.9	11.28	65.4	14.04	76.1	17.12	81.4	18.79	86.6	20.54	97.3	24.23	107.9	29.20
	29	54.9	12.00	65.4	14.94	76.1	18.25	81.4	20.02	86.3	21.90	97.3	25.86	107.9	30.26
	31	54.9	12.72	65.4	15.89	76.1	19.43	81.4	21.33	86.3	23.35	97.3	27.59	106.1	31.36
	33	54.9	13.54	65.4	17.71	76.1	20.69	81.4	22.72	86.3	24.86	97.3	29.45	104.6	32.50
	35	54.9	14.35	65.4	17.71	76.1	22.01	81.4	24.23	86.3	26.48	97.3	31.43	102.8	33.67
	37	54.9	15.22	65.4	19.06	76.1	23.41	79.9	25.80	86.3	28.20	97.3	33.47	101.3	34.92
	39	54.9	16.12	65.4	20.24	76.1	24.91	78.8	27.48	86.3	30.03	97.3	35.65	99.5	36.21
	41	51.9	18.09	62.1	22.31	72.3	27.73	77.3	28.10	82.1	30.72	92.6	36.46	98.0	39.06
	43	49.0	18.84	60.3	23.28	70.5	29.21	75.9	29.88	80.3	31.88	90.8	37.39	96.4	40.06
	44	48.3	19.67	58.8	24.26	68.9	30.81	74.0	31.74	78.8	33.10	89.1	38.34	94.6	41.08
	47	45.6	26.17	56.9	32.28	66.6	32.35	71.4	32.22	75.9	35.22	86.1	41.17	91.5	44.11
	50	41.7	25.69	51.0	31.69	59.5	34.11	63.7	34.88	67.7	37.60	76.9	44.00	82.2	46.13
	52	32.8	20.72	44.2	25.79	54.6	29.02	60.2	30.47	60.4	29.47	61.9	29.07	65.4	29.85

GMV X DC Inverter VRF Units

TC—Total capacity of outdoor unit; PI—Power input of outdoor unit															
Connection ratio	Outdoor air temp. (℃ DB)	Indoor air temp.													
		14.0℃ WB		17.0℃ WB		18.0℃ WB		19.0℃ WB		20.0℃ WB		22.0℃ WB		24.0℃ WB	
		20.0℃ DB		24.0℃ DB		26.0℃ DB		27.0℃ DB		28.0℃ DB		30.0℃ DB		32.0℃ DB	
		TC	PI	TC	PI	TC	PI	TC	PI	TC	PI	TC	PI	TC	PI
		kW	kW	kW	kW	kW	kW	kW	kW	kW	kW	kW	kW	kW	kW
70%	-5	48.1	6.57	57.2	8.12	66.6	9.85	71.2	10.80	75.9	11.77	85.0	13.86	94.4	16.12
	0	48.1	6.58	57.2	8.14	66.6	9.87	71.2	10.82	75.9	11.79	85.0	13.89	94.4	16.15
	4	48.1	6.60	57.2	8.17	66.6	9.90	71.2	10.86	75.9	11.84	85.0	13.94	94.4	16.21
	7	48.1	6.72	57.2	8.32	66.6	10.09	71.2	11.06	75.9	12.05	85.0	14.20	94.4	16.51
	10	48.1	8.11	57.2	9.60	66.6	11.18	71.2	12.05	75.8	12.91	85.1	14.67	94.4	16.48
	12	48.1	8.20	57.2	9.74	66.6	11.41	71.2	12.27	75.8	13.13	85.1	14.94	94.4	16.80
	14	48.1	8.33	57.2	9.92	66.6	11.59	71.2	12.45	75.8	13.36	85.1	15.22	94.4	17.12
	16	48.1	8.47	57.2	10.10	66.6	11.82	71.2	12.72	75.8	13.63	85.1	15.49	94.4	17.43
	18	48.1	8.60	57.2	10.28	66.6	12.05	71.2	12.95	75.8	13.86	85.1	15.80	94.4	17.80
	20	48.1	8.74	57.2	10.46	66.6	12.27	71.2	13.18	75.8	14.13	85.1	16.12	94.4	18.29
	21	48.1	8.83	57.2	10.55	66.6	12.36	71.2	13.31	75.8	14.26	85.1	16.30	94.4	18.93
	23	48.1	8.97	57.2	10.73	66.6	12.63	71.2	13.77	75.8	14.99	85.1	17.52	94.4	20.29
	25	48.1	9.15	57.2	11.18	66.6	13.45	71.2	14.72	75.8	15.98	85.1	18.75	94.4	21.69
	27	48.1	9.69	57.2	11.91	66.6	14.35	71.2	15.67	75.8	17.07	85.1	20.02	94.4	23.18
	29	48.1	10.28	57.2	12.63	66.6	15.26	71.2	16.71	75.8	18.16	85.1	21.33	94.4	24.77
	31	48.1	10.87	57.2	13.40	66.6	16.26	71.2	17.75	75.8	19.34	85.1	22.73	94.4	26.40
	33	48.1	11.55	57.2	14.26	66.6	17.30	71.2	18.88	75.8	20.60	85.1	24.23	94.4	28.17
	35	48.1	12.23	57.2	15.12	66.6	18.34	71.2	20.11	75.8	21.92	85.1	25.81	94.4	30.02
	37	48.1	12.91	57.2	16.03	66.6	19.52	69.9	21.37	75.8	23.32	85.1	27.49	94.4	31.97
	39	48.1	13.68	57.2	16.98	66.6	20.69	69.0	22.69	75.8	24.77	85.1	29.21	94.4	34.05
	41	45.4	15.41	54.3	19.06	63.3	23.11	67.7	23.32	72.1	25.42	81.1	29.94	90.0	34.83
	43	42.9	16.06	52.7	19.88	61.0	24.35	66.4	24.79	68.5	26.38	79.5	30.69	87.5	35.72
	44	42.3	16.75	51.5	20.72	60.3	25.68	64.8	26.34	69.2	27.40	78.0	31.49	86.9	36.63
	47	39.9	22.29	49.8	27.57	58.3	26.96	62.5	26.74	66.7	29.15	75.4	33.81	84.1	39.33
	50	36.5	21.89	44.6	27.07	52.0	28.43	55.7	28.95	59.5	31.12	67.3	36.14	75.6	41.13
	52	28.7	17.19	38.6	21.40	47.8	23.87	52.6	25.29	52.9	24.45	54.2	24.12	57.2	24.77
60%	-5	41.2	5.52	49.0	6.74	57.1	8.07	61.0	8.80	65.0	9.56	73.0	11.16	81.0	12.89
	0	41.2	5.53	49.0	6.75	57.1	8.09	61.0	8.82	65.0	9.57	73.0	11.18	81.0	12.91
	4	41.2	5.55	49.0	6.77	57.1	8.12	61.0	8.85	65.0	9.61	73.0	11.22	81.0	12.96
	7	41.2	5.65	49.0	6.90	57.1	8.27	61.0	9.02	65.0	9.79	73.0	11.43	81.0	13.20
	10	41.2	7.02	49.0	8.24	57.1	9.55	61.0	10.23	64.9	10.91	73.0	12.36	81.0	13.86
	12	41.2	7.15	49.0	8.38	57.1	9.74	61.0	10.42	64.9	11.09	73.0	12.59	81.0	14.08
	14	41.2	7.25	49.0	8.51	57.1	9.87	61.0	10.60	64.9	11.32	73.0	12.82	81.0	14.35
	16	41.2	7.34	49.0	8.65	57.1	10.05	61.0	10.78	64.9	11.50	73.0	13.04	81.0	14.63
	18	41.2	7.47	49.0	8.78	57.1	10.23	61.0	10.96	64.9	11.73	73.0	13.27	81.0	14.90
	20	41.2	7.56	49.0	8.97	57.1	10.42	61.0	11.18	64.9	11.95	73.0	13.54	81.0	15.22
	21	41.2	7.65	49.0	9.01	57.1	10.51	61.0	11.28	64.9	12.05	73.0	13.68	81.0	15.35
	23	41.2	7.74	49.0	9.19	57.1	10.69	61.0	11.50	64.9	12.27	73.0	14.22	81.0	16.35
	25	41.2	7.88	49.0	9.37	57.1	11.09	61.0	12.05	64.9	13.04	73.0	15.17	81.0	17.43
	27	41.2	8.20	49.0	9.92	57.1	11.82	61.0	12.86	64.9	13.90	73.0	16.17	81.0	18.61
	29	41.2	8.65	49.0	10.51	57.1	12.59	61.0	13.68	64.9	14.81	73.0	17.25	81.0	19.88
	31	41.2	9.19	49.0	11.18	57.1	13.36	61.0	14.54	64.9	15.76	73.0	18.34	81.0	21.15
	33	41.2	9.69	49.0	11.82	57.1	14.17	61.0	15.44	64.9	16.75	73.0	19.52	81.0	22.55
	35	41.2	10.28	49.0	12.54	57.1	15.03	61.0	16.39	64.9	17.80	73.0	20.78	81.0	24.00
	37	41.2	10.87	49.0	13.27	57.1	15.94	59.9	17.39	64.9	18.88	73.0	22.10	81.0	25.54
	39	41.2	11.46	49.0	14.04	57.1	16.89	59.1	18.43	64.9	20.06	73.0	23.46	81.0	27.17
	41	38.9	12.95	46.6	15.80	54.3	18.94	58.0	19.02	61.8	20.64	69.5	24.11	77.2	27.84
	43	36.8	13.51	44.3	16.47	52.7	19.96	56.9	20.20	59.9	21.43	68.7	24.72	75.6	28.56
	44	36.2	14.08	44.1	17.18	51.7	21.05	55.5	21.47	59.3	22.25	66.9	25.36	74.5	29.28
	47	34.2	18.74	42.7	22.87	50.0	22.10	53.6	21.80	57.1	23.67	64.6	27.23	72.1	31.44
	50	31.3	18.40	38.2	22.45	44.6	23.30	47.8	23.61	51.0	25.27	57.7	29.10	64.8	32.88
	52	24.6	14.02	33.1	17.45	41.0	19.64	45.1	20.62	45.3	19.94	46.4	19.67	49.0	20.20

TC—Total capacity of outdoor unit; PI—Power input of outdoor unit															
Connection ratio	Outdoor air temp. (℃ DB)	Indoor air temp.													
		14.0℃ WB		17.0℃ WB		18.0℃ WB		19.0℃ WB		20.0℃ WB		22.0℃ WB		24.0℃ WB	
		20.0℃ DB		24.0℃ DB		26.0℃ DB		27.0℃ DB		28.0℃ DB		30.0℃ DB		32.0℃ DB	
		TC	PI	TC	PI	TC	PI	TC	PI	TC	PI	TC	PI	TC	PI
		kW	kW	kW	kW	kW	kW	kW	kW	kW	kW	kW	kW	kW	kW
50%	-5	34.3	4.57	40.9	5.47	47.6	6.47	50.9	7.00	54.1	7.56	60.8	8.75	67.6	10.02
	0	34.3	4.58	40.9	5.48	47.6	6.48	50.9	7.02	54.1	7.58	60.8	8.77	67.6	10.04
	4	34.3	4.60	40.9	5.50	47.6	6.50	50.9	7.04	54.1	7.60	60.8	8.80	67.6	10.07
	7	34.3	4.68	40.9	5.60	47.6	6.62	50.9	7.17	54.1	7.75	60.8	8.97	67.6	10.26
	10	34.3	6.07	40.9	7.02	47.6	8.02	50.9	8.56	54.1	9.06	60.8	10.19	67.6	11.37
	12	34.3	6.11	40.9	7.11	47.6	8.15	50.9	8.65	54.1	9.24	60.8	10.37	67.6	11.55
	14	34.3	6.20	40.9	7.20	47.6	8.24	50.9	8.83	54.1	9.37	60.8	10.55	67.6	11.77
	16	34.3	6.29	40.9	7.29	47.6	8.38	50.9	8.97	54.1	9.51	60.8	10.73	67.6	11.95
	18	34.3	6.38	40.9	7.43	47.6	8.51	50.9	9.10	54.1	9.69	60.8	10.91	67.6	12.18
	20	34.3	6.48	40.9	7.52	47.6	8.65	50.9	9.28	54.1	9.87	60.8	11.14	67.6	12.41
	21	34.3	6.52	40.9	7.61	47.6	8.74	50.9	9.33	54.1	9.96	60.8	11.23	67.6	12.54
	23	34.3	6.61	40.9	7.70	47.6	8.88	50.9	9.51	54.1	10.14	60.8	11.41	67.6	12.82
	25	34.3	6.70	40.9	7.83	47.6	9.06	50.9	9.69	54.1	10.46	60.8	12.00	67.6	13.68
	27	34.3	6.84	40.9	8.15	47.6	9.55	50.9	10.32	54.1	11.09	60.8	12.77	67.6	14.58
	29	34.3	7.20	40.9	8.60	47.6	10.14	50.9	10.96	53.9	11.82	60.8	13.58	67.6	15.53
	31	34.3	7.61	40.9	9.10	47.6	10.82	50.9	11.64	53.9	12.54	60.8	14.45	67.6	16.53
	33	34.3	8.06	40.9	9.65	47.6	11.41	50.9	12.32	53.9	13.31	60.8	15.35	67.6	17.57
	35	34.3	8.51	40.9	10.19	47.6	12.05	50.9	13.04	53.9	14.08	60.8	16.30	67.6	18.66
	37	34.3	8.97	40.9	10.78	47.6	12.77	49.9	13.81	53.9	14.94	60.8	17.30	67.6	19.83
	39	34.3	9.46	40.9	11.37	47.6	13.49	49.3	14.63	53.9	15.85	60.8	18.34	67.6	21.06
	41	32.4	10.73	38.8	12.84	45.2	15.18	48.3	15.13	51.3	16.34	57.9	18.91	64.4	21.64
	43	30.7	11.20	36.9	13.47	44.0	15.99	47.4	16.21	50.5	16.97	56.3	19.40	62.8	22.20
	44	30.2	11.66	36.8	13.96	43.1	16.86	46.3	17.08	49.2	17.60	55.7	19.89	62.2	22.76
	47	28.5	15.52	35.6	18.57	41.6	17.71	44.6	17.35	47.5	18.73	53.8	21.36	60.1	24.44
	50	26.1	15.24	31.9	18.24	37.2	18.67	39.8	18.78	42.3	20.00	48.0	22.82	54.0	25.56
	52	20.5	11.15	27.6	13.88	34.1	15.62	37.6	16.40	37.8	15.86	38.7	15.65	40.9	16.07

➤ Rectification of heating capacity

GMV-224WM/B-X(P)

TC—Total capacity of outdoor unit; PI—Power input of outdoor unit														
Connection ratio	Outdoor air temp. (℃)		Indoor air temp. (℃ DB)											
			16		18		20		21		22		24	
			TC	PI	TC	PI	TC	PI	TC	PI	TC	PI	TC	PI
	℃ DB	℃ WB	kW	kW	kW	kW	kW	kW	kW	kW	kW	kW	kW	kW
135%	-19.8	-20.0	20.6	4.41	20.5	4.72	20.5	4.98	20.4	5.13	20.4	5.32	20.4	5.64
	-18.8	-19.0	20.8	4.48	20.7	4.79	20.7	5.03	20.7	5.21	20.6	5.35	20.6	5.68
	-16.7	-17.0	21.1	4.59	21.1	4.88	21.0	5.11	21.0	5.25	21.0	5.41	20.9	5.72
	-13.7	-15.0	21.5	4.68	21.4	4.96	21.4	5.17	21.4	5.32	21.3	5.48	21.3	5.75
	-11.8	-13.0	21.8	4.77	21.7	5.01	21.7	5.20	21.7	5.37	21.6	5.49	21.7	5.79
	-9.8	-11.0	22.2	4.84	22.1	5.08	22.0	5.25	22.1	5.39	22.1	5.52	22.0	5.78
	-9.5	-10.0	22.3	4.86	22.3	5.08	22.3	5.27	22.2	5.38	22.2	5.53	22.2	5.75
	-8.5	-9.1	22.5	4.89	22.5	5.11	22.5	5.26	22.4	5.39	22.4	5.50	22.4	5.76
	-7.0	-7.6	22.8	4.91	22.7	5.10	22.7	5.26	22.7	5.37	22.7	5.50	22.6	5.73
	-5.0	-5.6	24.6	5.23	24.5	5.32	24.5	5.58	24.5	5.69	24.4	5.80	24.4	6.00
	-3.0	-3.7	24.9	5.22	24.8	5.41	24.8	5.53	24.8	5.65	24.8	5.74	24.7	5.94
	0.0	-0.7	25.4	5.18	25.4	5.33	25.3	5.43	25.3	5.53	25.3	5.63	25.3	5.80
	3.0	2.2	26.9	5.30	27.8	5.64	27.8	5.73	27.8	5.82	27.7	5.90	27.7	6.07
	5.0	4.1	31.1	5.96	34.5	6.81	32.7	6.54	31.4	6.40	30.2	6.23	28.2	5.98
	7.0	6.0	33.9	6.34	35.1	6.74	32.7	6.35	31.5	5.54	30.2	6.04	28.5	5.71
	9.0	7.9	33.9	6.16	35.2	6.55	32.7	6.16	31.5	6.02	30.5	5.84	28.5	5.37
	11.0	9.8	33.9	5.98	35.2	6.34	32.7	5.95	31.5	5.70	30.5	5.48	28.5	5.06
	13.0	11.8	34.6	5.91	35.2	6.13	32.7	5.58	31.5	5.35	30.5	5.15	28.5	4.75
	15.0	13.7	36.3	6.01	35.2	5.78	32.7	5.26	31.5	5.04	30.5	4.85	28.5	4.48
	18.0	16.8	36.3	5.69	35.1	5.49	32.7	4.98	31.5	4.79	30.5	4.59	28.5	4.26
	20.0	18.5	36.3	5.41	35.1	5.24	32.7	4.76	31.5	4.58	30.5	4.36	28.5	4.07
	24.0	20.5	36.3	5.18	35.1	5.04	32.7	4.57	31.5	4.40	30.5	4.16	28.5	3.92
120%	-19.8	-20.0	20.5	4.84	20.5	5.13	20.4	5.36	20.4	5.50	20.4	5.66	20.3	5.98
	-18.8	-19.0	20.7	4.90	20.7	5.19	20.6	5.33	20.6	5.56	20.6	5.71	20.5	6.01
	-16.7	-17.0	21.1	4.98	21.0	5.26	20.9	5.43	21.0	5.61	20.9	5.74	20.9	6.05
	-13.7	-15.0	21.4	5.05	21.4	5.31	21.3	5.50	21.3	5.64	21.3	5.78	21.3	6.06
	-11.8	-13.0	21.7	5.12	21.7	5.34	21.7	5.51	21.6	5.64	21.7	5.80	21.6	6.03
	-9.8	-11.0	22.1	5.16	22.0	5.38	22.1	5.53	22.1	5.67	22.0	5.78	22.0	6.03
	-9.5	-10.0	22.3	5.16	22.2	5.38	22.2	5.53	22.2	5.65	22.2	5.72	22.1	5.99
	-8.5	-9.1	22.5	5.19	22.5	5.40	22.4	5.52	22.4	5.64	22.4	5.77	22.3	5.99
	-7.0	-7.6	22.7	5.19	22.7	5.38	22.7	5.51	22.6	5.60	22.6	5.74	22.6	5.92
	-5.0	-5.6	24.5	5.50	24.5	5.69	24.4	5.81	24.4	5.92	24.5	6.03	24.4	6.23
	-3.0	-3.7	24.8	5.48	24.8	5.63	24.7	5.73	24.8	5.84	24.8	5.96	24.7	6.13
	0.0	-0.7	25.4	5.40	25.3	5.54	25.3	5.70	25.3	5.72	25.3	5.83	25.3	5.98
	3.0	2.2	27.7	5.67	27.8	5.83	27.7	5.90	27.7	6.00	27.7	6.07	26.4	5.90
	5.0	4.1	34.5	6.86	32.4	6.62	30.1	6.22	29.0	6.08	28.3	6.00	26.4	5.54
	7.0	6.0	34.7	6.72	32.5	6.41	30.2	6.03	29.2	5.86	28.3	5.64	26.4	5.22
	9.0	7.9	34.8	6.53	32.5	6.23	30.2	5.74	29.2	5.51	28.3	5.30	26.4	4.91
	11.0	9.8	34.8	6.32	32.5	5.95	30.2	5.40	29.2	5.19	28.3	4.99	26.4	4.63
	13.0	11.8	34.8	6.04	32.5	5.58	30.2	5.06	29.2	4.88	28.3	4.69	26.4	4.35
	15.0	13.7	34.8	5.68	32.5	5.25	30.2	4.78	29.2	4.60	28.3	4.43	26.4	4.11
	18.0	16.8	34.8	5.37	32.5	4.97	30.2	4.55	29.2	4.36	28.3	4.19	26.4	3.90
	20.0	18.5	34.8	5.09	32.5	4.74	30.2	4.35	29.2	4.16	28.3	4.00	26.4	3.71
	24.0	20.5	34.8	4.84	32.5	4.55	30.2	4.19	29.2	3.98	28.3	3.84	26.4	3.56

TC—Total capacity of outdoor unit; PI—Power input of outdoor unit														
Connection ratio	Outdoor air temp.（℃）		Indoor air temp.（℃ DB）											
			16		18		20		21		22		24	
			TC	PI	TC	PI	TC	PI	TC	PI	TC	PI	TC	PI
	℃ DB	℃ WB	kW	kW	kW	kW	kW	kW	kW	kW	kW	kW	kW	kW
110%	-19.8	-20.0	20.5	5.27	20.4	5.54	20.4	5.73	20.4	5.88	20.3	6.01	20.3	6.34
	-18.8	-19.0	20.7	5.32	20.6	5.56	20.5	5.74	20.6	5.89	20.5	6.05	20.5	6.32
	-16.7	-17.0	21.0	5.38	20.9	5.63	20.9	5.77	20.9	5.94	20.9	6.08	20.9	6.36
	-13.7	-15.0	21.4	5.43	21.3	5.66	21.2	5.81	21.3	5.95	21.3	6.09	21.2	6.34
	-11.8	-13.0	21.7	5.47	21.7	5.68	21.6	5.82	21.6	5.93	21.6	6.08	21.5	6.30
	-9.8	-11.0	22.0	5.48	22.0	5.68	22.0	5.81	21.9	5.93	22.0	6.05	21.9	6.25
	-9.5	-10.0	22.2	5.47	22.2	5.69	22.2	5.81	22.1	5.90	22.1	6.02	22.1	6.23
	-8.5	-9.1	22.4	5.48	22.4	5.68	22.4	5.79	22.3	5.88	22.3	6.02	22.3	6.19
	-7.0	-7.6	22.6	5.48	22.6	5.63	22.6	5.75	22.6	5.84	22.6	5.88	22.5	6.14
	-5.0	-5.6	24.5	5.77	24.4	5.95	24.4	6.04	24.4	6.15	24.4	5.98	23.7	6.28
	-3.0	-3.7	24.8	5.73	24.7	5.87	24.7	5.96	24.7	6.05	24.7	5.70	23.7	6.08
	0.0	-0.7	25.3	5.62	25.3	5.76	25.3	5.84	25.2	5.90	26.0	5.91	24.0	5.78
	3.0	2.2	27.7	5.88	27.7	6.03	27.7	6.08	27.0	6.01	25.9	5.75	24.0	5.26
	5.0	4.1	31.9	6.57	29.8	6.26	27.7	5.83	26.6	5.58	26.0	5.41	24.0	4.95
	7.0	6.0	31.9	6.38	29.8	6.04	27.7	5.48	26.6	5.25	26.0	5.09	24.0	4.66
	9.0	7.9	31.9	6.17	29.8	5.68	27.8	5.17	26.7	4.95	26.0	4.79	24.0	4.39
	11.0	9.8	31.9	5.81	29.8	5.35	27.8	4.86	26.7	4.67	26.0	4.52	24.0	4.14
	13.0	11.8	31.9	5.45	29.8	5.02	27.8	4.57	26.7	4.39	26.0	4.25	24.0	3.90
	15.0	13.7	31.9	5.13	29.8	4.73	27.8	4.32	26.7	4.14	26.0	4.02	24.0	3.69
	18.0	16.8	31.9	4.85	29.8	4.49	27.8	3.95	26.7	3.93	26.0	3.83	24.0	3.52
	20.0	18.5	31.9	4.60	29.8	4.27	27.8	3.74	26.7	3.74	26.0	3.67	24.0	3.36
	24.0	20.5	31.9	4.39	29.8	4.07	27.8	3.57	26.7	3.58	26.0	3.54	24.0	3.24
100%	-19.8	-20.0	20.4	5.69	20.4	5.96	20.3	6.08	20.2	6.22	20.2	6.35	20.1	6.63
	-18.8	-19.0	20.5	5.72	20.5	5.93	20.5	6.11	20.4	6.22	20.4	6.38	20.3	6.61
	-16.7	-17.0	20.9	5.76	20.8	5.98	20.7	6.08	20.7	6.22	20.7	6.36	20.6	6.58
	-13.7	-15.0	21.2	5.78	21.2	5.99	21.2	6.11	21.1	6.24	21.0	6.33	20.9	6.57
	-11.8	-13.0	21.6	5.80	21.5	5.97	21.5	6.10	21.4	6.19	21.3	6.06	21.3	6.50
	-9.8	-11.0	21.9	5.78	21.8	5.97	21.8	6.05	21.8	6.15	21.6	6.24	21.3	6.32
	-9.5	-10.0	22.1	5.76	22.1	5.96	22.0	6.02	22.0	6.15	21.8	6.19	21.3	6.25
	-8.5	-9.1	22.2	5.75	22.2	5.90	22.2	6.00	22.1	6.09	21.9	6.17	21.3	6.15
	-7.0	-7.6	22.4	5.72	22.4	5.87	22.4	5.94	22.3	6.02	22.2	6.09	21.3	6.02
	-5.0	-5.6	24.0	5.96	24.0	6.11	24.0	6.18	23.9	6.28	23.5	6.26	22.1	6.03
	-3.0	-3.7	24.4	5.90	24.3	6.01	24.3	6.09	24.1	6.12	23.5	6.06	22.1	5.70
	0.0	-0.7	24.8	5.75	24.8	5.85	24.8	5.91	24.3	5.82	23.5	5.59	22.1	5.19
	3.0	2.2	27.1	5.98	26.9	6.05	25.0	5.47	24.3	5.29	23.5	5.09	22.1	4.72
	5.0	4.1	28.8	6.15	26.9	5.69	25.0	5.15	24.3	4.98	23.5	4.80	22.1	4.45
	7.0	6.0	28.8	5.81	26.9	5.35	25.0	4.78	24.3	4.69	23.5	4.52	22.1	4.20
	9.0	7.9	28.8	5.46	26.9	5.03	25.0	4.54	24.3	4.42	23.5	4.26	22.1	3.96
	11.0	9.8	28.8	5.14	26.9	4.74	25.0	4.29	24.3	4.17	23.5	4.02	22.1	3.75
	13.0	11.8	28.8	4.82	26.9	4.46	25.0	4.04	24.3	3.93	23.5	3.79	22.1	3.54
	15.0	13.7	28.8	4.55	26.9	4.21	25.0	3.82	24.3	3.72	23.5	3.59	22.1	3.35
	18.0	16.8	28.8	4.29	26.9	4.02	25.0	3.70	24.3	3.53	23.5	3.40	22.1	3.19
	20.0	18.5	28.8	4.05	26.9	3.85	25.0	3.55	24.3	3.37	23.5	3.24	22.1	3.06
	24.0	20.5	28.8	3.83	26.9	3.72	25.0	3.41	24.3	3.24	23.5	3.11	22.1	2.97

GMV X DC Inverter VRF Units

TC—Total capacity of outdoor unit; PI—Power input of outdoor unit														
Connection ratio	Outdoor air temp.（℃）		Indoor air temp.（℃ DB）											
			16		18		20		21		22		24	
			TC	PI	TC	PI	TC	PI	TC	PI	TC	PI	TC	PI
	℃ DB	℃ WB	kW	kW	kW	kW	kW	kW	kW	kW	kW	kW	kW	kW
90%	-19.8	-20.0	20.3	6.12	20.2	6.34	20.2	6.43	20.2	6.61	20.2	6.75	19.2	6.62
	-18.8	-19.0	20.5	6.15	20.4	6.35	20.4	6.46	20.4	6.60	20.4	6.73	19.2	6.58
	-16.7	-17.0	20.8	6.16	20.8	6.37	20.8	6.47	20.7	6.58	20.8	6.73	19.2	6.44
	-13.7	-15.0	21.2	6.16	21.1	6.36	21.1	6.44	21.1	6.51	21.0	6.67	19.3	6.29
	-11.8	-13.0	21.5	6.15	21.4	6.31	21.5	6.41	21.4	6.51	21.0	6.49	19.3	6.14
	-9.8	-11.0	21.9	6.12	21.9	6.27	21.8	6.34	21.9	6.46	21.1	6.33	19.3	5.97
	-9.5	-10.0	22.1	6.09	22.0	6.26	22.0	6.30	21.9	6.41	21.1	6.26	19.4	5.92
	-8.5	-9.1	22.2	6.06	22.1	6.19	22.1	6.28	21.9	6.31	21.1	6.15	19.7	5.89
	-7.0	-7.6	22.4	6.00	22.4	6.14	22.3	6.20	21.9	6.17	21.0	6.01	19.7	5.62
	-5.0	-5.6	24.0	6.24	23.9	6.38	22.6	6.06	21.8	5.92	21.0	5.72	19.7	5.29
	-3.0	-3.7	24.3	6.15	24.3	5.58	22.6	5.84	21.8	5.61	21.0	5.39	19.7	4.99
	0.0	-0.7	24.8	5.95	24.3	5.20	22.6	5.30	21.8	5.10	21.0	4.90	19.7	4.54
	3.0	2.2	26.0	5.78	24.3	5.32	22.6	4.84	21.8	4.66	21.0	4.48	19.7	4.15
	5.0	4.1	26.0	5.43	24.3	5.00	22.6	4.56	21.8	4.39	21.0	4.23	19.7	3.92
	7.0	6.0	26.0	5.11	24.3	4.72	22.6	4.30	21.8	4.14	21.0	3.99	19.7	3.70
	9.0	7.9	26.0	4.81	24.3	4.44	22.6	4.05	21.8	3.91	21.0	3.77	19.7	3.50
	11.0	9.8	26.0	4.53	24.3	4.19	22.6	3.83	21.8	3.70	21.0	3.56	19.7	3.31
	13.0	11.8	26.0	4.27	24.3	3.95	22.6	3.62	21.8	3.49	21.0	3.36	19.7	3.13
	15.0	13.7	26.0	4.03	24.3	3.73	22.6	3.43	21.8	3.29	21.0	3.19	19.7	2.97
	18.0	16.8	26.0	3.81	24.3	3.53	22.6	3.25	21.7	3.11	21.0	3.02	19.7	2.82
	20.0	18.5	26.0	3.60	24.2	3.33	22.6	3.09	21.7	2.93	21.0	2.87	19.7	2.70
	24.0	20.5	26.0	3.40	24.3	3.15	22.6	2.93	21.7	2.77	21.0	2.73	19.7	2.58
80%	-19.8	-20.0	20.2	6.56	20.2	6.76	20.1	6.81	19.4	6.67	18.7	6.57	17.5	6.34
	-18.8	-19.0	20.4	6.57	20.4	6.75	20.1	6.77	19.4	6.63	18.7	6.49	17.5	6.29
	-16.7	-17.0	20.8	6.56	20.7	6.75	20.2	6.63	19.4	6.49	18.7	6.35	17.6	6.19
	-13.7	-15.0	21.1	6.54	21.1	6.71	20.2	6.49	19.4	6.33	18.7	6.23	17.6	6.02
	-11.8	-13.0	21.4	6.50	21.4	6.64	20.2	6.34	19.4	6.18	18.7	6.05	17.6	5.74
	-9.8	-11.0	21.8	6.43	21.7	6.55	20.2	6.16	19.5	6.01	18.8	5.85	17.6	5.42
	-9.5	-10.0	22.0	6.38	21.7	6.48	20.2	6.06	19.5	5.91	18.8	5.68	17.6	5.26
	-8.5	-9.1	22.1	6.36	21.7	6.38	20.2	5.99	19.5	5.77	18.8	5.53	17.6	5.12
	-7.0	-7.6	22.3	6.28	21.7	6.23	20.2	5.74	19.4	5.50	18.7	5.28	17.6	4.92
	-5.0	-5.6	23.1	5.61	21.6	5.94	20.1	5.37	19.4	5.18	18.7	4.96	17.6	4.61
	-3.0	-3.7	23.1	5.42	21.6	5.59	20.1	5.06	19.4	4.90	18.7	4.68	17.6	4.36
	0.0	-0.7	23.1	5.52	21.6	5.07	20.1	4.61	19.4	4.45	18.7	4.27	17.6	3.98
	3.0	2.2	23.1	5.03	21.6	4.63	20.1	4.22	19.4	4.07	18.7	3.91	17.6	3.65
	5.0	4.1	23.1	4.73	21.6	4.36	20.1	3.98	19.4	3.84	18.7	3.70	17.6	3.45
	7.0	6.0	23.1	4.46	21.6	4.13	20.1	3.76	19.4	3.63	18.7	3.49	17.6	3.26
	9.0	7.9	23.1	4.21	21.6	3.89	20.1	3.57	19.4	3.43	18.7	3.31	17.6	3.09
	11.0	9.8	23.1	3.97	21.6	3.67	20.1	3.36	19.4	3.25	18.7	3.13	17.6	2.93
	13.0	11.8	23.1	3.75	21.6	3.47	20.1	3.18	19.4	3.07	18.7	2.96	17.6	2.77
	15.0	13.7	23.1	3.54	21.6	3.29	20.1	3.02	19.4	2.92	18.7	2.81	17.6	2.64
	18.0	16.8	23.2	3.39	21.6	3.13	20.1	2.87	19.4	2.77	18.7	2.66	17.6	2.52
	20.0	18.5	23.2	3.26	21.6	3.00	20.1	2.75	19.4	2.64	18.7	2.54	17.6	2.40
	24.0	20.5	23.2	3.16	21.6	2.90	20.1	2.63	19.4	2.53	18.7	2.42	17.6	2.30

TC—Total capacity of outdoor unit; PI—Power input of outdoor unit														
Connection ratio	Outdoor air temp.（℃）		Indoor air temp.（℃ DB）											
			16		18		20		21		22		24	
			TC	PI	TC	PI	TC	PI	TC	PI	TC	PI	TC	PI
	℃ DB	℃ WB	kW	kW	kW	kW	kW	kW	kW	kW	kW	kW	kW	kW
70%	-19.8	-20.0	20.1	6.97	18.9	6.74	17.7	6.33	17.0	6.17	16.4	6.04	15.5	5.82
	-18.8	-19.0	20.3	6.98	18.9	6.67	17.7	6.28	17.0	6.13	16.4	5.99	15.5	5.70
	-16.7	-17.0	20.3	6.83	19.0	6.52	17.7	6.13	17.0	5.98	16.4	5.83	15.5	5.44
	-13.7	-15.0	20.3	6.67	19.0	6.39	17.7	5.98	17.0	5.68	16.4	5.56	15.5	5.18
	-11.8	-13.0	20.3	6.52	19.0	6.21	17.7	5.71	17.0	5.49	16.4	5.27	15.5	4.91
	-9.8	-11.0	20.4	6.33	19.0	5.98	17.8	5.41	17.1	5.20	16.4	4.99	15.5	4.65
	-9.5	-10.0	20.4	6.23	19.0	5.81	17.8	5.25	17.1	5.05	16.4	4.85	15.5	4.52
	-8.5	-9.1	20.4	6.14	19.0	5.65	17.8	5.12	17.1	4.92	16.4	4.73	15.5	4.40
	-7.0	-7.6	20.3	5.85	19.0	5.39	17.7	4.89	17.0	4.71	16.4	4.52	15.5	4.22
	-5.0	-5.6	20.2	5.46	18.9	5.04	17.6	4.58	16.9	4.40	16.4	4.26	15.5	3.98
	-3.0	-3.7	20.2	5.15	18.9	4.75	17.6	4.32	16.9	4.16	16.4	4.02	15.5	3.76
	0.0	-0.7	20.2	4.68	18.9	4.35	17.6	3.95	16.9	3.80	16.4	3.68	15.5	3.45
	3.0	2.2	20.2	4.28	18.9	3.96	17.6	3.63	16.9	3.49	16.4	3.38	15.5	3.17
	5.0	4.1	20.2	4.04	18.9	3.74	17.6	3.43	16.9	3.30	16.4	3.20	15.5	3.00
	7.0	6.0	20.2	3.82	18.9	3.54	17.6	3.24	16.9	3.13	16.4	3.03	15.5	2.85
	9.0	7.9	20.2	3.61	18.9	3.35	17.6	3.07	16.9	2.96	16.4	2.88	15.5	2.70
	11.0	9.8	20.2	3.41	18.9	3.16	17.6	2.92	16.9	2.81	16.4	2.73	15.5	2.57
	13.0	11.8	20.2	3.22	18.9	3.00	17.6	2.76	16.9	2.67	16.4	2.58	15.5	2.44
	15.0	13.7	20.2	3.06	18.9	2.84	17.6	2.62	16.9	2.54	16.4	2.46	15.5	2.32
	18.0	16.8	20.2	2.90	18.9	2.70	17.6	2.49	16.9	2.41	16.4	2.34	15.5	2.22
	20.0	18.5	20.2	2.76	18.9	2.57	17.6	2.38	16.9	2.30	16.4	2.24	15.5	2.13
	24.0	20.5	20.2	2.64	18.9	2.46	17.6	2.29	16.9	2.21	16.4	2.16	15.5	2.05
60%	-19.8	-20.0	17.4	6.43	16.3	6.17	15.1	5.60	14.6	5.38	14.2	5.22	13.3	4.81
	-18.8	-19.0	17.4	6.38	16.3	6.09	15.1	5.48	14.6	5.27	14.2	5.11	13.3	4.71
	-16.7	-17.0	17.4	6.23	16.3	5.84	15.1	5.24	14.6	5.04	14.2	4.88	13.3	4.51
	-13.7	-15.0	17.5	6.03	16.4	5.56	15.2	5.00	14.6	4.81	14.2	4.65	13.3	4.29
	-11.8	-13.0	17.5	5.70	16.4	5.27	15.2	4.74	14.6	4.57	14.2	4.42	13.3	4.08
	-9.8	-11.0	17.5	5.40	16.4	4.99	15.2	4.50	14.7	4.33	14.2	4.18	13.3	3.87
	-9.5	-10.0	17.5	5.25	16.4	4.85	15.2	4.38	14.7	4.22	14.2	4.07	13.3	3.77
	-8.5	-9.1	17.5	5.11	16.4	4.73	15.2	4.27	14.7	4.11	14.2	3.97	13.3	3.68
	-7.0	-7.6	17.5	4.88	16.4	4.52	15.2	4.08	14.6	3.93	14.2	3.80	13.3	3.53
	-5.0	-5.6	17.4	4.57	16.3	4.23	15.1	3.83	14.6	3.69	14.2	3.60	13.3	3.34
	-3.0	-3.7	17.4	4.31	16.3	4.00	15.1	3.64	14.6	3.50	14.2	3.41	13.3	3.16
	0.0	-0.7	17.4	3.94	16.3	3.66	15.1	3.33	14.6	3.21	14.2	3.13	13.3	2.91
	3.0	2.2	17.4	3.61	16.3	3.36	15.1	3.07	14.6	2.95	14.2	2.89	13.3	2.68
	5.0	4.1	17.4	3.41	16.3	3.18	15.1	2.90	14.6	2.80	14.2	2.73	13.3	2.55
	7.0	6.0	17.4	3.23	16.3	3.01	15.1	2.75	14.6	2.66	14.2	2.60	13.3	2.42
	9.0	7.9	17.4	3.06	16.3	2.86	15.1	2.61	14.6	2.53	14.2	2.47	13.3	2.31
	11.0	9.8	17.4	2.90	16.3	2.71	15.1	2.49	14.6	2.40	14.2	2.34	13.3	2.20
	13.0	11.8	17.4	2.75	16.3	2.57	15.1	2.36	14.6	2.28	14.2	2.23	13.3	2.09
	15.0	13.7	17.4	2.62	16.3	2.44	15.1	2.25	14.6	2.18	14.2	2.13	13.3	1.99
	18.0	16.8	17.4	2.50	16.3	2.32	15.1	2.15	14.6	2.08	14.2	2.04	13.3	1.91
	20.0	18.5	17.3	2.39	16.3	2.22	15.1	2.06	14.6	2.00	14.2	1.96	13.3	1.84
	24.0	20.5	17.3	2.30	16.3	2.13	15.1	1.98	14.6	1.93	14.2	1.90	13.3	1.77

GMV X DC Inverter VRF Units

TC—Total capacity of outdoor unit; PI—Power input of outdoor unit														
Connection ratio	Outdoor air temp.（℃）		Indoor air temp.（℃ DB）											
			16		18		20		21		22		24	
			TC	PI	TC	PI	TC	PI	TC	PI	TC	PI	TC	PI
	℃ DB	℃ WB	kW	kW	kW	kW	kW	kW	kW	kW	kW	kW	kW	kW
50%	-19.8	-20.0	14.5	5.41	13.6	4.99	12.7	4.50	12.1	4.33	11.8	4.22	11.0	3.90
	-18.8	-19.0	14.6	5.30	13.6	4.89	12.7	4.42	12.1	4.24	11.8	4.13	11.0	3.83
	-16.7	-17.0	14.6	5.06	13.6	4.68	12.7	4.23	12.1	4.07	11.8	3.96	11.0	3.67
	-13.7	-15.0	14.6	4.83	13.7	4.46	12.7	4.04	12.2	3.89	11.8	3.77	11.0	3.50
	-11.8	-13.0	14.6	4.59	13.7	4.25	12.7	3.84	12.2	3.70	11.8	3.59	11.0	3.34
	-9.8	-11.0	14.6	4.35	13.7	4.03	12.7	3.66	12.2	3.52	11.9	3.44	11.0	3.17
	-9.5	-10.0	14.6	4.23	13.7	3.92	12.7	3.56	12.2	3.43	11.9	3.35	11.0	3.09
	-8.5	-9.1	14.6	4.13	13.7	3.83	12.7	3.48	12.2	3.35	11.9	3.27	11.0	3.02
	-7.0	-7.6	14.6	3.95	13.7	3.68	12.7	3.33	12.2	3.21	11.9	3.14	11.0	2.90
	-5.0	-5.6	14.5	3.70	13.6	3.44	12.6	3.14	12.1	3.02	11.9	2.98	11.0	2.75
	-3.0	-3.7	14.5	3.51	13.6	3.26	12.6	2.98	12.1	2.87	11.9	2.82	11.0	2.62
	0.0	-0.7	14.5	3.22	13.6	2.99	12.6	2.74	12.1	2.64	11.9	2.61	11.0	2.42
	3.0	2.2	14.5	2.96	13.6	2.76	12.6	2.53	12.1	2.44	11.9	2.41	11.0	2.24
	5.0	4.1	14.5	2.81	13.6	2.62	12.6	2.41	12.1	2.32	11.9	2.29	11.0	2.13
	7.0	6.0	14.5	2.67	13.6	2.49	12.6	2.29	12.1	2.21	11.9	2.18	11.0	2.03
	9.0	7.9	14.5	2.53	13.6	2.37	12.6	2.18	12.1	2.11	11.9	2.08	11.0	1.94
	11.0	9.8	14.5	2.41	13.6	2.25	12.6	2.08	12.1	2.01	11.9	1.98	11.0	1.85
	13.0	11.8	14.5	2.29	13.6	2.14	12.6	1.98	12.1	1.91	11.9	1.89	11.0	1.76
	15.0	13.7	14.5	2.18	13.6	2.04	12.6	1.89	12.1	1.83	11.9	1.80	11.0	1.68
	18.0	16.8	14.5	2.08	13.5	1.94	12.6	1.81	12.1	1.75	11.9	1.73	11.0	1.60
	20.0	18.5	14.5	1.97	13.5	1.85	12.6	1.74	12.1	1.69	11.9	1.66	11.0	1.53
	24.0	20.5	14.5	1.88	13.5	1.78	12.6	1.62	12.1	1.63	11.9	1.59	11.0	1.47

GMV-280WM/B-X(P)

TC—Total capacity of outdoor unit; PI—Power input of outdoor unit														
Connection ratio	Outdoor air temp.（℃）		Indoor air temp.（℃ DB）											
			16		18		20		21		22		24	
			TC	PI	TC	PI	TC	PI	TC	PI	TC	PI	TC	PI
	℃ DB	℃ WB	kW	kW	kW	kW	kW	kW	kW	kW	kW	kW	kW	kW
135%	-19.8	-20.0	26.0	5.90	25.9	6.33	25.8	6.68	25.7	6.88	25.7	6.79	25.7	7.56
	-18.8	-19.0	26.2	6.00	26.1	6.42	26.1	6.74	26.1	6.98	26.0	7.17	25.9	7.62
	-16.7	-17.0	26.6	6.14	26.5	6.54	26.5	6.85	26.5	7.03	26.4	7.25	26.3	7.67
	-13.7	-15.0	27.1	6.28	27.0	6.65	26.9	6.93	26.9	7.13	26.9	7.34	26.8	7.70
	-11.8	-13.0	27.5	6.40	27.4	6.72	27.3	6.97	27.3	7.19	27.3	7.36	27.3	7.75
	-9.8	-11.0	27.9	6.48	27.8	6.80	27.8	7.03	27.8	7.21	27.8	7.40	27.8	7.74
	-9.5	-10.0	28.1	6.51	28.1	6.81	28.1	7.05	28.0	7.21	28.0	7.41	28.0	7.70
	-8.5	-9.1	28.4	6.55	28.3	6.85	28.3	7.05	28.3	7.22	28.2	7.37	28.2	7.72
	-7.0	-7.6	28.7	6.58	28.6	6.84	28.6	7.05	28.6	7.19	28.6	7.37	28.5	7.68
	-5.0	-5.6	31.0	7.00	30.9	7.14	30.9	7.48	30.9	7.62	30.8	7.77	30.7	8.04
	-3.0	-3.7	31.4	7.00	31.3	7.26	31.3	7.40	31.3	7.57	31.2	7.69	31.1	7.95
	0.0	-0.7	32.0	6.95	32.0	7.15	31.9	7.28	31.9	7.41	31.9	7.54	31.9	7.78
	3.0	2.2	35.1	7.34	35.1	7.56	35.0	7.68	35.0	7.80	35.0	7.91	34.9	8.13
	5.0	4.1	43.5	8.88	43.4	9.12	41.2	8.76	39.6	8.57	38.0	8.35	35.5	8.01
	7.0	6.0	47.4	9.44	44.3	9.03	41.2	8.51	39.6	7.43	38.1	8.09	35.9	7.66
	9.0	7.9	47.5	9.18	44.3	8.78	41.2	8.25	39.7	8.06	38.4	7.82	35.9	7.20
	11.0	9.8	47.5	8.91	44.3	8.50	41.2	7.97	39.7	7.64	38.4	7.35	35.9	6.78
	13.0	11.8	47.5	8.62	44.3	8.22	41.2	7.47	39.7	7.16	38.4	6.90	35.9	6.36
	15.0	13.7	47.5	8.36	44.3	7.75	41.2	7.04	39.7	6.76	38.4	6.50	35.9	6.00
	18.0	16.8	47.4	7.90	44.2	7.35	41.2	6.67	39.7	6.42	38.4	6.15	35.9	5.71
	20.0	18.5	47.4	7.52	44.2	7.02	41.2	6.37	39.7	6.14	38.4	5.84	35.9	5.45
	24.0	20.5	47.4	7.19	44.2	6.76	41.2	6.13	39.7	5.90	38.4	5.58	35.9	5.25
120%	-19.8	-20.0	25.9	6.48	25.8	6.88	25.7	7.18	25.7	7.37	25.7	7.58	25.6	8.01
	-18.8	-19.0	26.1	6.56	26.0	6.95	26.0	7.13	26.0	7.45	25.9	7.64	25.8	8.06
	-16.7	-17.0	26.5	6.68	26.5	7.05	26.4	7.27	26.4	7.51	26.3	7.69	26.4	8.10
	-13.7	-15.0	27.0	6.77	26.9	7.11	26.9	7.37	26.9	7.55	26.9	7.75	26.8	8.12
	-11.8	-13.0	27.4	6.86	27.3	7.15	27.3	7.39	27.3	7.56	27.3	7.77	27.2	8.08
	-9.8	-11.0	27.8	6.91	27.8	7.21	27.8	7.40	27.8	7.60	27.8	7.75	27.7	8.08
	-9.5	-10.0	28.1	6.92	28.0	7.21	28.0	7.41	28.0	7.57	28.0	7.66	27.9	8.03
	-8.5	-9.1	28.3	6.95	28.3	7.24	28.3	7.40	28.2	7.56	28.2	7.73	28.1	8.03
	-7.0	-7.6	28.6	6.96	28.6	7.21	28.6	7.38	28.5	7.51	28.5	7.68	28.4	7.94
	-5.0	-5.6	30.9	7.37	30.8	7.62	30.8	7.78	30.8	7.93	30.8	8.08	30.7	8.35
	-3.0	-3.7	31.3	7.34	31.2	7.55	31.2	7.68	31.2	7.82	31.2	7.99	31.2	8.22
	0.0	-0.7	32.0	7.24	31.9	7.43	31.9	7.64	31.9	7.66	31.9	7.81	31.8	8.01
	3.0	2.2	35.0	7.61	35.0	7.82	34.9	7.90	34.9	8.03	34.9	8.14	33.3	7.91
	5.0	4.1	43.4	9.20	40.9	8.87	38.0	8.34	36.5	8.14	35.6	8.04	33.3	7.43
	7.0	6.0	43.8	9.00	40.9	8.59	38.0	8.08	36.8	7.86	35.6	7.55	33.3	6.99
	9.0	7.9	43.8	8.75	40.9	8.35	38.1	7.69	36.8	7.39	35.6	7.11	33.3	6.58
	11.0	9.8	43.8	8.47	40.9	7.97	38.1	7.23	36.8	6.96	35.6	6.69	33.3	6.20
	13.0	11.8	43.8	8.09	40.9	7.47	38.1	6.79	36.8	6.53	35.6	6.29	33.3	5.84
	15.0	13.7	43.8	7.62	40.9	7.04	38.1	6.41	36.8	6.16	35.6	5.93	33.3	5.51
	18.0	16.8	43.8	7.20	40.9	6.66	38.1	6.09	36.8	5.84	35.6	5.62	33.3	5.22
	20.0	18.5	43.8	6.82	40.9	6.36	38.1	5.83	36.8	5.57	35.6	5.36	33.3	4.97
	24.0	20.5	43.8	6.49	40.9	6.09	38.1	5.62	36.8	5.34	35.6	5.14	33.3	4.77

GMV X DC Inverter VRF Units

TC—Total capacity of outdoor unit; PI—Power input of outdoor unit														
Connection ratio	Outdoor air temp.（℃）		Indoor air temp.（℃ DB）											
			16		18		20		21		22		24	
			TC	PI	TC	PI	TC	PI	TC	PI	TC	PI	TC	PI
	℃ DB	℃ WB	kW	kW	kW	kW	kW	kW	kW	kW	kW	kW	kW	kW
110%	-19.8	-20.0	25.8	7.06	25.7	7.42	25.7	7.68	25.7	7.88	25.6	8.06	25.6	8.49
	-18.8	-19.0	26.0	7.13	26.0	7.45	25.9	7.69	25.9	7.89	25.8	8.11	25.8	8.47
	-16.7	-17.0	26.5	7.21	26.4	7.55	26.3	7.73	26.3	7.96	26.3	8.14	26.3	8.52
	-13.7	-15.0	26.9	7.27	26.8	7.59	26.8	7.79	26.8	7.97	26.8	8.16	26.7	8.50
	-11.8	-13.0	27.3	7.34	27.3	7.61	27.3	7.80	27.2	7.94	27.2	8.15	27.1	8.44
	-9.8	-11.0	27.8	7.34	27.7	7.62	27.7	7.78	27.7	7.95	27.7	8.10	27.6	8.37
	-9.5	-10.0	28.0	7.33	28.0	7.62	27.9	7.78	27.9	7.91	27.9	8.06	27.8	8.35
	-8.5	-9.1	28.2	7.35	28.2	7.61	28.2	7.75	28.1	7.87	28.1	8.06	28.1	8.30
	-7.0	-7.6	28.5	7.34	28.5	7.54	28.5	7.70	28.4	7.83	28.4	7.88	28.4	8.23
	-5.0	-5.6	30.8	7.74	30.8	7.98	30.7	8.09	30.7	8.24	30.7	8.01	29.9	8.42
	-3.0	-3.7	31.2	7.68	31.2	7.86	31.1	7.98	31.1	8.11	31.2	7.63	29.9	8.15
	0.0	-0.7	31.9	7.54	31.9	7.72	31.9	7.82	31.8	7.91	32.7	7.92	30.3	7.74
	3.0	2.2	34.9	7.89	34.9	8.09	34.8	8.14	34.0	8.05	32.7	7.71	30.3	7.05
	5.0	4.1	40.2	8.81	37.5	8.39	34.9	7.80	33.5	7.47	32.7	7.25	30.3	6.63
	7.0	6.0	40.2	8.55	37.5	8.09	34.9	7.34	33.6	7.04	32.7	6.82	30.3	6.24
	9.0	7.9	40.2	8.27	37.6	7.62	35.0	6.92	33.6	6.63	32.7	6.42	30.3	5.89
	11.0	9.8	40.2	7.78	37.6	7.17	35.0	6.52	33.6	6.25	32.7	6.05	30.3	5.55
	13.0	11.8	40.2	7.30	37.6	6.72	35.0	6.13	33.6	5.88	32.7	5.70	30.3	5.23
	15.0	13.7	40.2	6.88	37.6	6.34	35.0	5.79	33.6	5.55	32.7	5.39	30.3	4.95
	18.0	16.8	40.2	6.50	37.6	6.02	35.0	5.29	33.6	5.26	32.7	5.13	30.3	4.71
	20.0	18.5	40.2	6.17	37.6	5.72	35.0	5.02	33.6	5.01	32.7	4.92	30.3	4.51
	24.0	20.5	40.2	5.89	37.6	5.46	35.0	4.78	33.6	4.80	32.7	4.74	30.3	4.34
100%	-19.8	-20.0	25.7	7.62	25.7	7.99	25.6	8.15	25.5	8.34	25.5	8.51	25.4	8.88
	-18.8	-19.0	25.9	7.67	25.8	7.95	25.8	8.18	25.7	8.33	25.7	8.55	25.6	8.86
	-16.7	-17.0	26.3	7.72	26.2	8.02	26.1	8.15	26.1	8.33	26.1	8.52	26.0	8.82
	-13.7	-15.0	26.8	7.75	26.7	8.03	26.7	8.18	26.6	8.36	26.5	8.48	26.4	8.80
	-11.8	-13.0	27.2	7.78	27.1	8.00	27.1	8.17	27.0	8.30	26.9	8.12	26.8	8.71
	-9.8	-11.0	27.6	7.75	27.5	8.00	27.5	8.11	27.4	8.23	27.3	8.36	26.8	8.46
	-9.5	-10.0	27.8	7.73	27.8	7.99	27.7	8.07	27.7	8.25	27.5	8.30	26.8	8.38
	-8.5	-9.1	28.0	7.71	27.9	7.91	27.9	8.04	27.8	8.15	27.7	8.27	26.8	8.24
	-7.0	-7.6	28.3	7.66	28.3	7.87	28.2	7.96	28.1	8.07	28.0	8.16	26.8	8.07
	-5.0	-5.6	30.3	7.99	30.2	8.19	30.2	8.28	30.1	8.41	29.6	8.38	27.8	8.09
	-3.0	-3.7	30.7	7.90	30.6	8.06	30.6	8.16	30.3	8.20	29.6	8.12	27.8	7.64
	0.0	-0.7	31.3	7.71	31.2	7.84	31.2	7.92	30.6	7.79	29.6	7.49	27.8	6.95
	3.0	2.2	34.2	8.02	33.9	8.11	31.5	7.33	30.6	7.09	29.6	6.83	27.8	6.33
	5.0	4.1	36.3	8.25	33.9	7.62	31.5	6.90	30.6	6.68	29.6	6.43	27.8	5.97
	7.0	6.0	36.3	7.78	33.9	7.17	31.5	6.20	30.6	6.29	29.6	6.06	27.8	5.63
	9.0	7.9	36.3	7.31	33.9	6.74	31.5	6.08	30.6	5.93	29.6	5.71	27.8	5.31
	11.0	9.8	36.3	6.89	33.9	6.35	31.5	5.75	30.6	5.59	29.6	5.39	27.8	5.02
	13.0	11.8	36.3	6.47	33.9	5.98	31.5	5.42	30.6	5.27	29.6	5.09	27.8	4.74
	15.0	13.7	36.3	6.10	33.9	5.64	31.5	5.12	30.6	4.98	29.6	4.81	27.8	4.49
	18.0	16.8	36.3	5.75	33.9	5.38	31.5	4.95	30.6	4.73	29.6	4.55	27.8	4.28
	20.0	18.5	36.3	5.43	33.9	5.16	31.5	4.75	30.6	4.52	29.6	4.34	27.8	4.10
	24.0	20.5	36.3	5.13	33.9	4.99	31.5	4.57	30.6	4.35	29.6	4.17	27.8	3.97

TC—Total capacity of outdoor unit; PI—Power input of outdoor unit														
Connection ratio	Outdoor air temp.（℃）		Indoor air temp.（℃ DB）											
			16		18		20		21		22		24	
			TC	PI	TC	PI	TC	PI	TC	PI	TC	PI	TC	PI
	℃ DB	℃ WB	kW	kW	kW	kW	kW	kW	kW	kW	kW	kW	kW	kW
90%	-19.8	-20.0	25.6	8.20	25.5	8.50	25.4	8.62	25.5	8.85	25.5	9.04	24.2	8.87
	-18.8	-19.0	25.8	8.24	25.7	8.51	25.7	8.65	25.7	8.84	25.7	9.02	24.2	8.82
	-16.7	-17.0	26.2	8.26	26.2	8.54	26.2	8.66	26.1	8.81	26.2	9.02	24.2	8.63
	-13.7	-15.0	26.7	8.26	26.6	8.52	26.6	8.63	26.6	8.72	26.5	8.93	24.3	8.43
	-11.8	-13.0	27.1	8.25	27.0	8.45	27.0	8.59	27.0	8.72	26.5	8.70	24.3	8.23
	-9.8	-11.0	27.6	8.20	27.6	8.40	27.5	8.49	27.5	8.65	26.6	8.48	24.3	8.00
	-9.5	-10.0	27.8	8.16	27.8	8.39	27.7	8.44	27.7	8.59	26.6	8.38	24.5	7.93
	-8.5	-9.1	27.9	8.12	27.9	8.30	27.9	8.41	27.7	8.45	26.6	8.24	24.8	7.89
	-7.0	-7.6	28.2	8.04	28.2	8.23	28.2	8.31	27.6	8.26	26.5	8.05	24.8	7.54
	-5.0	-5.6	30.2	8.36	30.2	8.55	28.5	8.12	27.4	7.93	26.5	7.67	24.8	7.09
	-3.0	-3.7	30.6	8.24	30.6	7.48	28.5	7.82	27.4	7.52	26.5	7.23	24.8	6.68
	0.0	-0.7	31.2	7.98	30.6	6.98	28.5	7.10	27.4	6.83	26.5	6.57	24.8	6.08
	3.0	2.2	32.7	7.74	30.6	7.13	28.5	6.48	27.4	6.24	26.5	6.00	24.8	5.56
	5.0	4.1	32.7	7.28	30.6	6.71	28.5	6.11	27.4	5.88	26.5	5.66	24.8	5.25
	7.0	6.0	32.7	6.84	30.6	6.32	28.5	5.76	27.4	5.55	26.5	5.34	24.8	4.96
	9.0	7.9	32.7	6.45	30.6	5.95	28.5	5.43	27.4	5.24	26.5	5.05	24.8	4.69
	11.0	9.8	32.7	6.08	30.6	5.61	28.5	5.14	27.4	4.95	26.5	4.77	24.8	4.44
	13.0	11.8	32.7	5.72	30.6	5.29	28.5	4.84	27.4	4.68	26.5	4.51	24.8	4.19
	15.0	13.7	32.7	5.40	30.6	5.00	28.5	4.59	27.4	4.41	26.5	4.27	24.8	3.98
	18.0	16.8	32.7	5.10	30.6	4.73	28.5	4.36	27.4	4.16	26.5	4.05	24.8	3.78
	20.0	18.5	32.7	4.82	30.6	4.46	28.5	4.14	27.4	3.93	26.5	3.85	24.8	3.61
	24.0	20.5	32.7	4.55	30.6	4.22	28.5	3.93	27.4	3.71	26.5	3.65	24.8	3.45
80%	-19.8	-20.0	25.5	8.79	25.4	9.06	25.4	9.12	24.4	8.93	23.5	8.81	22.0	8.49
	-18.8	-19.0	25.7	8.81	25.7	9.04	25.4	9.07	24.4	8.88	23.5	8.70	22.0	8.43
	-16.7	-17.0	26.2	8.80	26.1	9.05	25.4	8.89	24.4	8.69	23.6	8.51	22.2	8.29
	-13.7	-15.0	26.6	8.76	26.5	8.99	25.5	8.69	24.5	8.48	23.6	8.34	22.2	8.07
	-11.8	-13.0	27.0	8.71	26.9	8.90	25.5	8.49	24.5	8.28	23.6	8.11	22.2	7.69
	-9.8	-11.0	27.5	8.62	27.4	8.79	25.5	8.25	24.5	8.05	23.6	7.83	22.2	7.26
	-9.5	-10.0	27.7	8.56	27.4	8.69	25.5	8.12	24.5	7.92	23.6	7.61	22.2	7.05
	-8.5	-9.1	27.9	8.52	27.4	8.55	25.5	8.02	24.5	7.73	23.6	7.41	22.2	6.86
	-7.0	-7.6	28.1	8.42	27.3	8.35	25.5	7.69	24.5	7.37	23.6	7.07	22.2	6.59
	-5.0	-5.6	29.2	7.52	27.2	7.96	25.3	7.19	24.5	6.93	23.6	6.65	22.2	6.18
	-3.0	-3.7	29.2	7.27	27.2	7.49	25.3	6.77	24.5	6.57	23.6	6.27	22.2	5.84
	0.0	-0.7	29.2	7.39	27.2	6.80	25.3	6.17	24.5	5.96	23.6	5.72	22.2	5.33
	3.0	2.2	29.2	6.74	27.2	6.20	25.3	5.65	24.5	5.45	23.6	5.24	22.2	4.89
	5.0	4.1	29.2	6.34	27.2	5.85	25.3	5.33	24.5	5.15	23.6	4.95	22.2	4.62
	7.0	6.0	29.2	5.98	27.2	5.53	25.3	5.04	24.5	4.87	23.6	4.68	22.2	4.37
	9.0	7.9	29.2	5.64	27.2	5.21	25.3	4.78	24.5	4.60	23.6	4.43	22.2	4.14
	11.0	9.8	29.2	5.33	27.2	4.92	25.3	4.51	24.5	4.35	23.6	4.19	22.2	3.93
	13.0	11.8	29.2	5.02	27.2	4.65	25.3	4.26	24.5	4.12	23.6	3.97	22.2	3.72
	15.0	13.7	29.2	4.75	27.2	4.41	25.3	4.04	24.5	3.91	23.6	3.76	22.2	3.54
	18.0	16.8	29.2	4.54	27.2	4.19	25.3	3.85	24.5	3.71	23.6	3.57	22.2	3.37
	20.0	18.5	29.2	4.36	27.2	4.02	25.3	3.68	24.5	3.54	23.6	3.40	22.2	3.22
	24.0	20.5	29.2	4.23	27.2	3.89	25.3	3.53	24.5	3.39	23.6	3.25	22.2	3.08

GMV X DC Inverter VRF Units

TC—Total capacity of outdoor unit; PI—Power input of outdoor unit														
Connection ratio	Outdoor air temp.（℃）		Indoor air temp.（℃ DB）											
			16		18		20		21		22		24	
			TC	PI	TC	PI	TC	PI	TC	PI	TC	PI	TC	PI
	℃ DB	℃ WB	kW	kW	kW	kW	kW	kW	kW	kW	kW	kW	kW	kW
70%	-19.8	-20.0	25.3	9.34	23.8	9.04	22.3	8.47	21.4	8.27	20.6	8.09	19.5	7.80
	-18.8	-19.0	25.6	9.36	23.9	8.94	22.3	8.41	21.4	8.21	20.6	8.03	19.5	7.64
	-16.7	-17.0	25.6	9.16	23.9	8.74	22.3	8.21	21.4	8.01	20.6	7.82	19.5	7.29
	-13.7	-15.0	25.6	8.95	23.9	8.57	22.3	8.01	21.5	7.76	20.7	7.45	19.5	6.93
	-11.8	-13.0	25.6	8.74	23.9	8.32	22.3	7.65	21.5	7.36	20.7	7.06	19.5	6.58
	-9.8	-11.0	25.7	8.48	24.0	8.01	22.4	7.24	21.5	6.97	20.7	6.69	19.5	6.23
	-9.5	-10.0	25.7	8.35	24.0	7.78	22.4	7.04	21.5	6.77	20.7	6.50	19.5	6.05
	-8.5	-9.1	25.7	8.23	24.0	7.57	22.4	6.85	21.5	6.59	20.7	6.34	19.5	5.90
	-7.0	-7.6	25.6	7.84	23.9	7.22	22.3	6.55	21.5	6.30	20.7	6.05	19.5	5.65
	-5.0	-5.6	25.5	7.32	23.8	6.75	22.2	6.14	21.3	5.90	20.7	5.70	19.5	5.34
	-3.0	-3.7	25.5	6.90	23.8	6.37	22.2	5.79	21.3	5.57	20.7	5.39	19.5	5.04
	0.0	-0.7	25.5	6.28	23.8	5.83	22.2	5.29	21.3	5.10	20.7	4.94	19.5	4.62
	3.0	2.2	25.5	5.74	23.8	5.01	22.2	4.86	21.3	4.68	20.7	4.53	19.5	4.25
	5.0	4.1	25.5	5.41	23.8	5.01	22.2	4.60	21.3	4.43	20.7	4.29	19.5	4.02
	7.0	6.0	25.5	5.12	23.8	4.74	22.2	4.35	21.3	4.19	20.7	4.07	19.5	3.82
	9.0	7.9	25.5	4.84	23.8	4.48	22.2	4.12	21.3	3.97	20.7	3.85	19.5	3.62
	11.0	9.8	25.5	4.58	23.8	4.24	22.2	3.91	21.3	3.77	20.7	3.66	19.5	3.44
	13.0	11.8	25.5	4.32	23.8	4.02	22.2	3.70	21.3	3.58	20.7	3.46	19.5	3.27
	15.0	13.7	25.5	4.10	23.8	3.81	22.2	3.51	21.3	3.40	20.7	3.29	19.5	3.11
	18.0	16.8	25.5	3.89	23.8	3.62	22.2	3.34	21.3	3.23	20.7	3.14	19.5	2.97
	20.0	18.5	25.5	3.71	23.8	3.45	22.2	3.19	21.3	3.09	20.7	3.01	19.5	2.85
	24.0	20.5	25.5	3.54	23.8	3.29	22.2	3.06	21.3	2.96	20.7	2.89	19.5	2.75
60%	-19.8	-20.0	21.9	8.62	20.5	8.27	19.1	7.49	18.4	7.21	17.9	7.00	16.7	6.45
	-18.8	-19.0	22.0	8.56	20.6	8.16	19.1	7.34	18.4	7.06	17.9	6.85	16.7	6.32
	-16.7	-17.0	22.0	8.35	20.6	7.83	19.1	7.02	18.4	6.76	17.9	6.54	16.7	6.04
	-13.7	-15.0	22.0	8.08	20.6	7.45	19.1	6.69	18.5	6.44	17.9	6.23	16.7	5.75
	-11.8	-13.0	22.0	7.65	20.6	7.06	19.1	6.35	18.5	6.12	17.9	5.92	16.7	5.47
	-9.8	-11.0	22.1	7.23	20.7	6.69	19.2	6.03	18.5	5.80	17.9	5.61	16.7	5.19
	-9.5	-10.0	22.1	7.03	20.7	6.51	19.2	5.86	18.5	5.65	17.9	5.45	16.7	5.05
	-8.5	-9.1	22.1	6.85	20.7	6.34	19.2	5.72	18.5	5.51	17.9	5.32	16.7	4.93
	-7.0	-7.6	22.0	6.54	20.6	6.06	19.1	5.47	18.5	5.27	17.9	5.10	16.7	4.73
	-5.0	-5.6	21.9	6.12	20.5	5.67	19.0	5.14	18.3	4.95	17.9	4.82	16.7	4.48
	-3.0	-3.7	21.9	5.78	20.5	5.36	19.0	4.88	18.3	4.69	17.9	4.56	16.7	4.24
	0.0	-0.7	21.9	5.28	20.5	4.91	19.0	4.46	18.3	4.30	17.9	4.19	16.7	3.89
	3.0	2.2	21.9	4.84	20.5	4.51	19.0	4.11	18.3	3.96	17.9	3.87	16.7	3.41
	5.0	4.1	21.9	4.58	20.5	4.26	19.0	3.89	18.3	3.76	17.9	3.66	16.7	3.42
	7.0	6.0	21.9	4.33	20.5	4.04	19.0	3.69	18.3	3.56	17.9	3.48	16.7	3.24
	9.0	7.9	21.9	4.10	20.5	3.83	19.0	3.50	18.3	3.39	17.9	3.30	16.7	3.09
	11.0	9.8	21.9	3.89	20.5	3.64	19.0	3.33	18.3	3.22	17.9	3.14	16.7	2.94
	13.0	11.8	21.9	3.68	20.5	3.45	19.0	3.17	18.3	3.06	17.9	2.99	16.7	2.80
	15.0	13.7	21.9	3.51	20.5	3.27	19.0	3.01	18.3	2.92	17.9	2.85	16.7	2.67
	18.0	16.8	21.9	3.35	20.5	3.12	19.0	2.88	18.3	2.79	17.9	2.73	16.7	2.56
	20.0	18.5	21.9	3.20	20.5	2.98	19.0	2.76	18.3	2.68	17.9	2.63	16.7	2.46
	24.0	20.5	21.9	3.08	20.5	2.85	19.0	2.66	18.3	2.59	17.9	2.54	16.7	2.38

TC—Total capacity of outdoor unit; PI—Power input of outdoor unit														
Connection ratio	Outdoor air temp.（℃）		Indoor air temp.（℃ DB）											
			16		18		20		21		22		24	
			TC	PI	TC	PI	TC	PI	TC	PI	TC	PI	TC	PI
	℃ DB	℃ WB	kW	kW	kW	kW	kW	kW	kW	kW	kW	kW	kW	kW
50%	-19.8	-20.0	18.3	7.25	17.1	6.69	15.9	6.02	15.3	5.80	14.9	5.65	13.9	5.23
	-18.8	-19.0	18.3	7.10	17.2	6.56	16.0	5.91	15.3	5.68	14.9	5.53	13.9	5.13
	-16.7	-17.0	18.4	6.79	17.2	6.27	16.0	5.66	15.3	5.45	14.9	5.30	13.9	4.92
	-13.7	-15.0	18.4	6.47	17.2	5.98	16.0	5.41	15.3	5.21	14.9	5.06	13.9	4.69
	-11.8	-13.0	18.4	6.15	17.2	5.69	16.0	5.15	15.3	4.96	14.9	4.81	13.9	4.47
	-9.8	-11.0	18.4	5.83	17.2	5.40	16.0	4.90	15.3	4.71	15.0	4.61	13.9	4.25
	-9.5	-10.0	18.4	5.67	17.2	5.25	16.0	4.77	15.4	4.60	15.0	4.49	13.9	4.14
	-8.5	-9.1	18.4	5.53	17.2	5.13	16.0	4.66	15.4	4.49	15.0	4.38	13.9	4.05
	-7.0	-7.6	18.4	5.29	17.2	4.93	16.0	4.46	15.3	4.30	15.0	4.21	13.9	3.89
	-5.0	-5.6	18.3	4.96	17.1	4.61	15.9	4.20	15.2	4.05	15.0	3.99	13.9	3.69
	-3.0	-3.7	18.3	4.70	17.1	4.37	15.9	3.99	15.2	3.84	15.0	3.78	13.9	3.51
	0.0	-0.7	18.3	4.31	17.1	4.01	15.9	3.68	15.2	3.54	15.0	3.49	13.9	3.24
	3.0	2.2	18.3	3.97	17.1	3.70	15.9	3.39	15.2	3.27	15.0	3.24	13.9	3.00
	5.0	4.1	18.3	3.77	17.1	3.51	15.9	3.22	15.2	3.11	15.0	3.07	13.9	2.85
	7.0	6.0	18.3	3.58	17.1	3.34	15.9	3.07	15.2	2.96	15.0	2.93	13.9	2.73
	9.0	7.9	18.3	3.39	17.1	3.17	15.9	2.92	15.2	2.83	15.0	2.79	13.9	2.60
	11.0	9.8	18.3	3.23	17.1	3.01	15.9	2.78	15.2	2.69	15.0	2.66	13.9	2.48
	13.0	11.8	18.3	3.07	17.1	2.87	15.9	2.65	15.2	2.57	15.0	2.53	13.9	2.36
	15.0	13.7	18.3	2.92	17.1	2.74	15.9	2.53	15.2	2.45	15.0	2.42	13.9	2.25
	18.0	16.8	18.3	2.78	17.0	2.60	15.9	2.43	15.2	2.35	15.0	2.31	13.9	2.15
	20.0	18.5	18.3	2.64	17.0	2.49	15.9	2.34	15.2	2.26	15.0	2.22	13.9	2.05
	24.0	20.5	18.3	2.52	17.0	2.38	15.9	2.17	15.2	2.19	15.0	2.13	13.9	1.97

GMV-335WM/B-X(P)

TC—Total capacity of outdoor unit; PI—Power input of outdoor unit														
Connection ratio	Outdoor air temp.（℃）		Indoor air temp.（℃ DB）											
			16		18		20		21		22		24	
			TC	PI	TC	PI	TC	PI	TC	PI	TC	PI	TC	PI
	℃ DB	℃ WB	kW	kW	kW	kW	kW	kW	kW	kW	kW	kW	kW	kW
135%	-19.8	-20.0	28.6	7.03	28.5	7.53	28.4	7.94	28.4	8.22	28.4	8.50	28.3	9.01
	-18.8	-19.0	28.9	7.16	28.8	7.66	28.7	8.02	28.7	8.30	28.7	8.56	28.6	9.10
	-16.7	-17.0	29.4	7.35	29.3	7.82	29.3	8.19	29.2	8.38	29.2	8.67	29.1	9.15
	-13.7	-15.0	30.0	7.52	29.9	7.97	29.7	8.27	29.8	8.51	29.7	8.77	29.6	9.21
	-11.8	-13.0	30.4	7.65	30.3	8.04	30.2	8.34	30.3	8.60	30.2	8.81	30.1	9.25
	-9.8	-11.0	30.9	7.77	30.9	8.16	30.8	8.43	30.8	8.65	30.8	8.84	30.7	9.25
	-9.5	-10.0	31.2	7.82	31.2	8.19	31.1	8.45	31.0	8.63	31.1	8.87	30.9	9.20
	-8.5	-9.1	31.5	7.87	31.4	8.22	31.4	8.44	31.3	8.65	31.3	8.85	31.3	9.24
	-7.0	-7.6	31.9	7.92	31.8	8.23	31.7	8.43	31.7	8.62	31.6	8.82	31.6	9.19
	-5.0	-5.6	33.2	8.12	33.1	8.26	32.9	8.62	32.9	8.79	32.8	8.96	32.8	9.29
	-3.0	-3.7	34.7	8.37	34.6	8.67	34.6	8.85	34.5	9.02	34.5	9.19	34.4	9.50
	0.0	-0.7	37.5	8.79	37.5	9.06	37.3	9.21	37.3	9.36	37.2	9.53	37.2	9.81
	3.0	2.2	40.4	9.14	40.3	9.40	40.2	9.54	40.2	9.68	40.2	9.83	40.1	10.10
	5.0	4.1	42.5	9.38	42.3	9.62	42.3	9.73	42.2	9.88	42.2	10.02	42.1	10.27
	7.0	6.0	44.6	9.59	44.5	9.81	44.5	9.93	44.4	8.98	44.4	10.20	42.6	9.82
	9.0	7.9	46.9	9.79	46.7	10.01	46.7	10.11	46.6	10.24	45.7	10.06	42.6	9.23
	11.0	9.8	49.2	9.99	49.1	10.18	48.9	10.21	47.2	9.83	45.7	9.45	42.6	8.69
	13.0	11.8	51.9	10.18	51.7	10.37	48.9	9.58	47.2	9.21	45.7	8.87	42.6	8.16
	15.0	13.7	54.4	10.35	52.0	9.82	48.9	9.02	47.2	8.69	45.7	8.36	42.6	7.70
	18.0	16.8	54.4	9.80	52.0	9.35	48.9	8.56	47.2	8.26	45.7	7.90	42.6	7.32
	20.0	18.5	54.4	9.33	52.0	8.93	48.9	8.17	47.2	7.89	45.7	7.51	42.6	6.99
	24.0	20.5	54.4	8.92	52.0	8.59	48.9	7.86	47.2	7.59	45.7	7.17	42.6	6.74
120%	-19.8	-20.0	28.5	7.71	28.4	8.18	28.4	8.56	28.4	8.79	28.3	9.03	28.2	9.54
	-18.8	-19.0	28.8	7.83	28.7	8.30	28.7	8.51	28.6	8.86	28.6	9.13	28.6	9.63
	-16.7	-17.0	29.3	7.98	29.3	8.43	29.2	8.70	29.1	8.95	29.2	9.20	29.1	9.67
	-13.7	-15.0	29.8	8.09	29.7	8.50	29.7	8.78	29.7	9.02	29.6	9.22	29.6	9.67
	-11.8	-13.0	30.3	8.21	30.2	8.56	30.2	8.82	30.2	9.04	30.1	9.27	30.1	9.64
	-9.8	-11.0	30.9	8.29	30.8	8.64	30.7	8.84	30.8	9.09	30.7	9.26	30.6	9.66
	-9.5	-10.0	31.2	8.32	31.1	8.66	31.0	8.88	31.0	9.05	31.0	9.18	30.9	9.63
	-8.5	-9.1	31.4	8.35	31.4	8.68	31.3	8.85	31.2	9.05	31.3	9.26	31.2	9.62
	-7.0	-7.6	31.7	8.35	31.7	8.63	31.6	8.82	31.6	9.01	31.6	9.19	31.5	9.50
	-5.0	-5.6	33.1	8.52	32.9	8.81	32.8	8.97	32.8	9.14	32.8	9.30	32.7	9.60
	-3.0	-3.7	34.6	8.77	34.6	9.05	34.5	9.19	34.5	9.34	34.4	9.51	34.4	9.80
	0.0	-0.7	37.3	9.15	37.3	9.40	37.2	9.64	37.2	9.67	37.1	9.82	37.1	10.10
	3.0	2.2	40.3	9.49	40.2	9.72	40.2	9.83	40.1	9.97	40.1	10.10	39.3	10.08
	5.0	4.1	42.3	9.69	42.2	9.91	42.2	10.01	42.1	10.15	42.1	10.28	39.3	9.47
	7.0	6.0	44.5	9.89	44.5	10.10	44.4	10.19	43.7	10.07	42.2	9.68	39.3	8.91
	9.0	7.9	46.7	10.09	46.6	10.28	45.1	9.84	43.7	9.47	42.2	9.11	39.3	8.39
	11.0	9.8	49.1	10.26	48.1	10.12	45.1	9.26	43.7	8.92	42.2	8.58	39.3	7.91
	13.0	11.8	50.9	10.16	48.1	9.49	45.1	8.68	43.7	8.38	42.2	8.07	39.3	7.44
	15.0	13.7	50.9	9.57	48.1	8.94	45.1	8.20	43.7	7.90	42.2	7.61	39.3	7.02
	18.0	16.8	50.9	9.04	48.1	8.47	45.1	7.79	43.7	7.49	42.2	7.21	39.3	6.66
	20.0	18.5	50.9	8.57	48.1	8.08	45.1	7.45	43.7	7.14	42.2	6.87	39.3	6.34
	24.0	20.5	50.9	8.15	48.1	7.75	45.1	7.18	43.7	6.85	42.2	6.60	39.3	6.08

TC—Total capacity of outdoor unit; PI—Power input of outdoor unit														
Connection ratio	Outdoor air temp.（℃）		Indoor air temp.（℃ DB）											
			16		18		20		21		22		24	
			TC	PI	TC	PI	TC	PI	TC	PI	TC	PI	TC	PI
	℃ DB	℃ WB	kW	kW	kW	kW	kW	kW	kW	kW	kW	kW	kW	kW
110%	-19.8	-20.0	28.4	8.41	28.3	8.84	28.3	9.14	28.3	9.39	28.2	9.60	28.2	10.08
	-18.8	-19.0	28.7	8.50	28.7	8.90	28.6	9.19	28.5	9.39	28.6	9.68	28.5	10.10
	-16.7	-17.0	29.2	8.59	29.1	9.00	29.0	9.22	29.1	9.49	29.1	9.73	29.0	10.17
	-13.7	-15.0	29.7	8.69	29.7	9.07	29.6	9.30	29.6	9.53	29.6	9.72	29.6	10.16
	-11.8	-13.0	30.2	8.78	30.2	9.09	30.1	9.30	30.1	9.51	30.1	9.72	30.0	10.08
	-9.8	-11.0	30.8	8.81	30.7	9.14	30.7	9.29	30.7	9.53	30.6	9.69	30.6	10.01
	-9.5	-10.0	31.0	8.79	30.9	9.10	30.9	9.29	30.9	9.48	30.9	9.66	30.9	10.01
	-8.5	-9.1	31.3	8.80	31.3	9.14	31.2	9.28	31.2	9.43	31.2	9.65	31.1	9.95
	-7.0	-7.6	31.7	8.81	31.6	9.05	31.5	9.21	31.6	9.39	31.5	9.42	31.4	9.85
	-5.0	-5.6	32.9	8.94	32.8	9.20	32.7	9.32	32.7	9.48	34.3	9.64	32.6	9.93
	-3.0	-3.7	34.5	9.17	34.5	9.41	34.4	9.53	34.4	9.68	37.1	9.83	34.3	10.10
	0.0	-0.7	37.2	9.51	37.2	9.74	37.1	9.84	37.1	9.97	38.7	10.12	36.0	9.95
	3.0	2.2	40.2	9.83	40.1	10.03	40.1	10.12	40.0	10.24	38.7	9.85	36.0	9.06
	5.0	4.1	42.2	10.01	42.2	10.22	41.4	10.00	40.0	9.62	38.7	9.27	36.0	8.53
	7.0	6.0	44.4	10.20	44.0	10.26	41.4	9.40	40.0	9.05	38.7	8.71	36.0	8.02
	9.0	7.9	47.2	10.49	44.0	9.65	41.4	8.85	40.0	8.52	38.7	8.20	36.0	7.57
	11.0	9.8	47.7	9.97	44.0	9.08	41.4	8.33	40.0	8.04	38.7	7.74	36.0	7.14
	13.0	11.8	47.7	9.35	44.5	8.61	41.4	7.84	40.0	7.56	38.7	7.28	36.0	6.73
	15.0	13.7	47.7	8.81	44.5	8.12	41.4	7.41	40.0	7.14	38.7	6.89	36.0	6.36
	18.0	16.8	47.7	8.34	44.5	7.70	41.4	6.76	40.0	6.77	38.7	6.56	36.0	6.06
	20.0	18.5	47.7	7.91	44.5	7.32	41.4	6.41	40.0	6.44	38.7	6.29	36.0	5.80
	24.0	20.5	47.7	7.55	44.5	6.99	41.4	6.11	40.0	6.17	38.7	6.06	36.0	5.58
100%	-19.8	-20.0	28.4	9.12	28.2	9.46	28.1	9.65	28.1	9.93	28.0	10.10	27.9	10.55
	-18.8	-19.0	28.5	9.13	28.4	9.47	28.4	9.72	28.3	9.92	28.3	10.17	28.2	10.55
	-16.7	-17.0	29.0	9.20	28.9	9.56	28.8	9.72	28.8	9.94	28.8	10.16	28.7	10.52
	-13.7	-15.0	29.6	9.26	29.5	9.60	29.4	9.74	29.4	9.99	29.2	10.10	29.2	10.52
	-11.8	-13.0	30.1	9.31	30.0	9.58	29.9	9.74	29.9	9.94	29.7	9.69	29.6	10.40
	-9.8	-11.0	30.6	9.30	30.5	9.59	30.4	9.69	30.5	9.88	30.2	9.99	30.1	10.28
	-9.5	-10.0	30.8	9.26	30.7	9.54	30.6	9.63	30.7	9.85	30.5	9.95	30.4	10.27
	-8.5	-9.1	31.0	9.24	30.9	9.48	30.9	9.63	30.9	9.77	30.7	9.91	30.6	10.17
	-7.0	-7.6	31.4	9.20	31.3	9.42	31.2	9.52	31.2	9.69	31.0	9.76	31.0	10.09
	-5.0	-5.6	32.8	9.36	32.7	9.59	32.7	9.69	32.6	9.83	32.6	9.97	32.6	10.24
	-3.0	-3.7	34.4	9.57	34.4	9.78	34.3	9.87	34.3	10.01	34.3	10.15	32.8	9.76
	0.0	-0.7	37.1	9.88	37.1	10.08	37.0	10.15	36.4	10.02	35.2	9.63	32.8	8.87
	3.0	2.2	40.1	10.16	40.0	10.34	37.6	9.45	36.4	9.11	35.2	8.78	32.8	8.08
	5.0	4.1	42.1	10.34	40.0	9.72	37.6	8.90	36.4	8.58	35.2	8.27	32.8	7.62
	7.0	6.0	42.3	9.82	40.0	9.13	37.5	8.19	36.4	8.09	35.2	7.79	32.8	7.18
	9.0	7.9	42.3	9.22	40.5	8.71	37.6	7.84	36.4	7.62	35.2	7.34	32.8	6.78
	11.0	9.8	43.4	8.90	40.5	8.21	37.6	7.41	36.4	7.19	35.2	6.93	32.8	6.41
	13.0	11.8	43.4	8.36	40.5	7.72	37.6	6.98	36.4	6.78	35.2	6.54	32.8	6.05
	15.0	13.7	43.4	7.88	40.5	7.28	37.6	6.60	36.4	6.41	35.2	6.18	32.8	5.73
	18.0	16.8	43.4	7.43	40.5	6.95	37.6	6.38	36.4	6.08	35.2	5.85	32.8	5.46
	20.0	18.5	43.4	7.02	40.5	6.67	37.6	6.13	36.4	5.81	35.2	5.58	32.8	5.24
	24.0	20.5	43.4	6.63	40.5	6.45	37.6	5.89	36.4	5.59	35.2	5.36	32.8	5.07

GMV X DC Inverter VRF Units

TC—Total capacity of outdoor unit; PI—Power input of outdoor unit														
Connection ratio	Outdoor air temp.（℃）		Indoor air temp.（℃ DB）											
			16		18		20		21		22		24	
			TC	PI	TC	PI	TC	PI	TC	PI	TC	PI	TC	PI
	℃ DB	℃ WB	kW	kW	kW	kW	kW	kW	kW	kW	kW	kW	kW	kW
90%	-19.8	-20.0	28.2	9.77	28.1	10.13	28.0	10.27	28.1	10.54	28.0	10.74	28.0	11.10
	-18.8	-19.0	28.4	9.81	28.3	10.13	28.3	10.30	28.3	10.52	28.4	10.74	28.2	11.12
	-16.7	-17.0	28.9	9.86	28.9	10.19	28.8	10.30	28.9	10.52	28.9	10.77	28.8	11.07
	-13.7	-15.0	29.5	9.87	29.4	10.19	29.4	10.28	29.4	10.43	29.3	10.69	28.9	10.86
	-11.8	-13.0	30.0	9.87	29.9	10.12	29.9	10.25	29.9	10.45	29.9	10.59	28.9	10.60
	-9.8	-11.0	30.5	9.79	30.5	10.05	30.4	10.16	30.5	10.35	30.4	10.49	29.0	10.31
	-9.5	-10.0	30.8	9.76	30.7	10.03	30.6	10.08	30.7	10.30	30.7	10.47	29.1	10.20
	-8.5	-9.1	31.0	9.73	30.9	9.95	30.8	10.04	30.9	10.20	30.9	10.37	29.5	10.14
	-7.0	-7.6	31.3	9.65	31.2	9.85	31.2	9.94	31.2	10.10	31.2	10.22	29.5	9.69
	-5.0	-5.6	32.7	9.78	32.6	9.98	32.6	10.04	32.6	10.18	31.6	9.90	29.5	9.11
	-3.0	-3.7	34.3	9.96	34.3	9.06	33.9	10.05	32.7	9.68	31.6	9.32	29.5	8.59
	0.0	-0.7	37.1	10.25	36.0	8.89	33.9	9.13	32.7	8.80	31.6	8.48	29.5	7.81
	3.0	2.2	38.2	9.76	36.0	9.09	33.9	8.33	32.7	8.04	31.6	7.74	29.5	7.15
	5.0	4.1	38.2	9.18	36.4	8.64	33.9	7.86	32.7	7.57	31.6	7.31	29.5	6.75
	7.0	6.0	39.0	8.81	36.4	8.14	33.9	7.41	32.7	7.15	31.6	6.89	29.5	6.37
	9.0	7.9	39.0	8.31	36.4	7.66	33.9	6.99	32.7	6.75	31.6	6.51	29.5	6.02
	11.0	9.8	39.0	7.83	36.4	7.23	33.9	6.61	32.7	6.38	31.6	6.15	29.5	5.71
	13.0	11.8	39.0	7.37	36.4	6.82	33.9	6.23	32.7	6.02	31.6	5.82	29.5	5.39
	15.0	13.7	39.0	6.96	36.4	6.44	33.9	5.91	32.7	5.69	31.6	5.51	29.5	5.12
	18.0	16.8	39.0	6.58	36.4	6.08	33.9	5.60	32.7	5.37	31.6	5.23	29.5	4.87
	20.0	18.5	39.0	6.22	36.4	5.75	33.9	5.32	32.7	5.07	31.6	4.97	29.5	4.65
	24.0	20.5	39.0	5.87	36.4	5.43	33.9	5.05	32.7	4.78	31.6	4.72	29.5	4.44
80%	-19.8	-20.0	28.0	10.44	28.0	10.80	28.0	10.87	28.0	11.09	27.9	11.31	25.6	10.69
	-18.8	-19.0	28.3	10.49	28.3	10.77	28.2	10.88	28.3	11.10	28.0	11.18	25.7	10.62
	-16.7	-17.0	28.9	10.50	28.8	10.80	28.7	10.86	28.8	11.06	28.0	10.93	25.7	10.36
	-13.7	-15.0	29.3	10.44	29.4	10.75	29.3	10.80	29.1	10.91	28.1	10.72	25.9	10.18
	-11.8	-13.0	29.8	10.40	29.9	10.66	29.8	10.73	29.1	10.65	28.1	10.42	26.3	9.83
	-9.8	-11.0	30.4	10.31	30.3	10.51	30.3	10.62	29.2	10.35	28.1	10.06	26.3	9.29
	-9.5	-10.0	30.7	10.26	30.6	10.50	30.4	10.44	29.2	10.19	28.1	9.78	26.3	9.02
	-8.5	-9.1	30.9	10.22	30.8	10.41	30.4	10.31	29.2	9.94	28.1	9.52	26.3	8.78
	-7.0	-7.6	31.1	10.08	31.2	10.29	30.3	9.89	29.1	9.47	28.2	9.12	26.3	8.43
	-5.0	-5.6	32.6	9.08	32.0	10.13	30.1	9.24	29.1	8.91	28.2	8.58	26.3	7.91
	-3.0	-3.7	33.9	9.14	32.3	9.62	30.1	8.70	29.1	8.44	28.2	8.09	26.3	7.47
	0.0	-0.7	33.9	9.29	32.3	8.74	30.1	7.93	29.1	7.66	28.2	7.38	26.3	6.82
	3.0	2.2	34.7	8.67	32.3	7.97	30.1	7.26	29.1	7.00	28.2	6.76	26.3	6.25
	5.0	4.1	34.7	8.16	32.3	7.51	30.1	6.85	29.1	6.62	28.2	6.39	26.3	5.91
	7.0	6.0	34.7	7.69	32.3	7.10	30.1	6.47	29.1	6.26	28.2	6.04	26.3	5.60
	9.0	7.9	34.7	7.26	32.3	6.69	30.1	6.15	29.1	5.91	28.2	5.72	26.3	5.30
	11.0	9.8	34.7	6.85	32.3	6.33	30.1	5.79	29.1	5.60	28.2	5.41	26.3	5.03
	13.0	11.8	34.7	6.46	32.3	5.97	30.1	5.48	29.1	5.29	28.2	5.12	26.3	4.76
	15.0	13.7	34.7	6.11	32.3	5.66	30.1	5.20	29.1	5.02	28.2	4.86	26.3	4.53
	18.0	16.8	34.7	5.83	32.3	5.38	30.1	4.95	29.1	4.77	28.2	4.61	26.3	4.32
	20.0	18.5	34.7	5.60	32.3	5.16	30.1	4.73	29.1	4.55	28.2	4.39	26.3	4.12
	24.0	20.5	34.7	5.43	32.3	4.99	30.1	4.54	29.1	4.36	28.2	4.19	26.3	3.95

TC—Total capacity of outdoor unit; PI—Power input of outdoor unit														
Connection ratio	Outdoor air temp.（℃）		Indoor air temp.（℃ DB）											
			16		18		20		21		22		24	
			TC	PI	TC	PI	TC	PI	TC	PI	TC	PI	TC	PI
	℃ DB	℃ WB	kW	kW	kW	kW	kW	kW	kW	kW	kW	kW	kW	kW
70%	-19.8	-20.0	27.9	11.14	27.9	11.42	26.5	10.89	25.4	10.62	24.4	10.37	22.9	9.93
	-18.8	-19.0	28.2	11.15	28.2	11.42	26.5	10.81	25.5	10.54	24.5	10.29	22.9	9.72
	-16.7	-17.0	28.7	11.11	28.5	11.29	26.5	10.56	25.5	10.29	24.6	10.07	22.9	9.28
	-13.7	-15.0	29.3	11.04	28.6	11.06	26.6	10.30	25.5	9.97	24.6	9.58	22.9	8.82
	-11.8	-13.0	29.8	10.97	28.6	10.74	26.6	9.83	25.5	9.45	24.6	9.08	22.9	8.36
	-9.8	-11.0	30.3	10.83	28.6	10.34	26.6	9.31	25.6	8.95	24.6	8.58	22.9	7.92
	-9.5	-10.0	30.5	10.73	28.6	10.04	26.6	9.05	25.6	8.70	24.6	8.35	22.9	7.70
	-8.5	-9.1	30.6	10.61	28.6	9.78	26.6	8.81	25.6	8.47	24.6	8.13	22.9	7.50
	-7.0	-7.6	30.6	10.11	28.6	9.32	26.6	8.42	25.5	8.10	24.6	7.79	22.9	7.19
	-5.0	-5.6	30.4	9.45	28.4	8.72	26.4	7.89	25.4	7.58	24.6	7.33	22.9	6.79
	-3.0	-3.7	30.4	8.89	28.4	8.22	26.4	7.45	25.4	7.16	24.6	6.93	22.9	6.42
	0.0	-0.7	30.4	8.10	28.4	7.53	26.4	6.81	25.4	6.55	24.6	6.34	22.9	5.88
	3.0	2.2	30.4	7.40	28.4	6.96	26.4	6.25	25.4	6.01	24.6	5.82	22.9	5.40
	5.0	4.1	30.4	6.98	28.4	6.47	26.4	5.91	25.4	5.69	24.6	5.52	22.9	5.12
	7.0	6.0	30.4	6.60	28.4	6.12	26.4	5.59	25.4	5.38	24.6	5.23	22.9	4.85
	9.0	7.9	30.4	6.24	28.4	5.79	26.4	5.30	25.4	5.10	24.6	4.95	22.9	4.60
	11.0	9.8	30.4	5.90	28.4	5.48	26.4	5.03	25.4	4.84	24.6	4.70	22.9	4.37
	13.0	11.8	30.4	5.57	28.4	5.19	26.4	4.76	25.4	4.59	24.6	4.45	22.9	4.15
	15.0	13.7	30.4	5.28	28.4	4.92	26.4	4.52	25.4	4.37	24.6	4.23	22.9	3.96
	18.0	16.8	30.4	5.01	28.4	4.67	26.4	4.30	25.4	4.16	24.6	4.04	22.9	3.78
	20.0	18.5	30.4	4.78	28.4	4.45	26.4	4.10	25.4	3.98	24.6	3.86	22.9	3.63
	24.0	20.5	30.4	4.56	28.4	4.25	26.4	3.94	25.4	3.82	24.6	3.72	22.9	3.50
60%	-19.8	-20.0	26.2	11.12	24.4	10.60	22.7	9.64	21.8	9.24	21.2	8.94	19.7	8.24
	-18.8	-19.0	26.2	11.03	24.4	10.47	22.7	9.45	21.8	9.06	21.2	8.75	19.7	8.07
	-16.7	-17.0	26.2	10.76	24.4	10.04	22.7	9.03	21.9	8.66	21.2	8.36	19.7	7.72
	-13.7	-15.0	26.3	10.41	24.5	9.56	22.8	8.61	21.9	8.26	21.2	7.96	19.7	7.35
	-11.8	-13.0	26.3	9.86	24.5	9.06	22.8	8.17	21.9	7.85	21.2	7.56	19.7	6.99
	-9.8	-11.0	26.3	9.33	24.5	8.58	22.8	7.76	21.9	7.44	21.2	7.16	19.7	6.63
	-9.5	-10.0	26.3	9.07	24.5	8.34	22.8	7.54	21.9	7.25	21.2	6.97	19.7	6.45
	-8.5	-9.1	26.3	8.83	24.5	8.13	22.8	7.36	21.9	7.06	21.2	6.79	19.7	6.29
	-7.0	-7.6	26.3	8.43	24.5	7.77	22.8	7.03	21.9	6.76	21.2	6.51	19.7	6.04
	-5.0	-5.6	26.1	7.89	24.3	7.27	22.6	6.61	21.9	6.38	21.2	6.16	19.7	5.72
	-3.0	-3.7	26.1	7.45	24.3	6.87	22.6	6.27	21.9	6.04	21.2	5.83	19.7	5.41
	0.0	-0.7	26.1	6.81	24.3	6.29	22.6	5.74	21.9	5.55	21.2	5.35	19.7	4.97
	3.0	2.2	26.1	6.24	24.3	5.78	22.6	5.28	21.9	5.10	21.2	4.94	19.7	4.59
	5.0	4.1	26.1	5.90	24.3	5.47	22.6	5.00	21.9	4.84	21.2	4.68	19.7	4.36
	7.0	6.0	26.1	5.59	24.3	5.18	22.6	4.74	21.9	4.59	21.2	4.45	19.7	4.14
	9.0	7.9	26.1	5.29	24.3	4.91	22.6	4.51	21.9	4.37	21.2	4.22	19.7	3.95
	11.0	9.8	26.1	5.02	24.3	4.67	22.6	4.29	21.9	4.15	21.2	4.01	19.7	3.76
	13.0	11.8	26.1	4.75	24.3	4.42	22.6	4.07	21.9	3.94	21.2	3.82	19.7	3.57
	15.0	13.7	26.1	4.52	24.3	4.20	22.6	3.88	21.9	3.76	21.2	3.64	19.7	3.41
	18.0	16.8	26.1	4.32	24.3	3.99	22.6	3.70	21.9	3.59	21.2	3.49	19.7	3.27
	20.0	18.5	26.1	4.14	24.3	3.81	22.6	3.55	21.9	3.45	21.2	3.36	19.7	3.15
	24.0	20.5	26.1	3.98	24.3	3.66	22.6	3.42	21.9	3.33	21.2	3.25	19.7	3.04

GMV X DC Inverter VRF Units

TC—Total capacity of outdoor unit; PI—Power input of outdoor unit														
Connection ratio	Outdoor air temp.（℃）		Indoor air temp.（℃ DB）											
			16		18		20		21		22		24	
			TC	PI	TC	PI	TC	PI	TC	PI	TC	PI	TC	PI
	℃ DB	℃ WB	kW	kW	kW	kW	kW	kW	kW	kW	kW	kW	kW	kW
50%	-19.8	-20.0	21.8	9.31	20.4	8.59	19.0	7.74	18.2	7.47	17.6	7.21	16.4	6.67
	-18.8	-19.0	21.8	9.11	20.4	8.42	19.0	7.60	18.2	7.32	17.6	7.06	16.4	6.54
	-16.7	-17.0	21.8	8.71	20.4	8.05	19.0	7.28	18.2	7.02	17.6	6.77	16.4	6.27
	-13.7	-15.0	21.8	8.30	20.4	7.68	19.0	6.95	18.3	6.71	17.6	6.45	16.4	5.99
	-11.8	-13.0	21.8	7.89	20.4	7.31	19.0	6.62	18.3	6.38	17.6	6.14	16.4	5.70
	-9.8	-11.0	21.9	7.48	20.5	6.93	19.1	6.30	18.3	6.07	17.6	5.84	16.4	5.42
	-9.5	-10.0	21.9	7.28	20.5	6.74	19.1	6.14	18.3	5.92	17.6	5.69	16.4	5.28
	-8.5	-9.1	21.9	7.10	20.5	6.59	19.1	5.99	18.3	5.78	17.6	5.56	16.4	5.16
	-7.0	-7.6	21.8	6.79	20.4	6.33	19.0	5.74	18.3	5.54	17.6	5.34	16.4	4.96
	-5.0	-5.6	21.7	6.37	20.3	5.92	18.9	5.40	18.2	5.22	17.6	5.06	16.4	4.70
	-3.0	-3.7	21.7	6.03	20.3	5.61	18.9	5.12	18.2	4.95	17.6	4.80	16.4	4.47
	0.0	-0.7	21.7	5.54	20.3	5.15	18.9	4.73	18.2	4.56	17.6	4.43	16.4	4.13
	3.0	2.2	21.7	5.10	20.3	4.75	18.9	4.36	18.2	4.22	17.6	4.10	16.4	3.83
	5.0	4.1	21.7	4.84	20.3	4.51	18.9	4.14	18.2	4.01	17.6	3.89	16.4	3.64
	7.0	6.0	21.7	4.59	20.3	4.28	18.9	3.95	18.2	3.82	17.6	3.71	16.4	3.48
	9.0	7.9	21.7	4.35	20.3	4.07	18.9	3.75	18.2	3.64	17.6	3.53	16.4	3.31
	11.0	9.8	21.7	4.14	20.3	3.87	18.9	3.58	18.2	3.47	17.6	3.37	16.4	3.16
	13.0	11.8	21.7	3.94	20.3	3.68	18.9	3.41	18.2	3.31	17.6	3.21	16.4	3.02
	15.0	13.7	21.7	3.75	20.3	3.51	18.9	3.26	18.2	3.15	17.6	3.07	16.4	2.87
	18.0	16.8	21.7	3.57	20.3	3.36	18.9	3.12	18.2	3.03	17.6	2.93	16.4	2.74
	20.0	18.5	21.7	3.40	20.3	3.21	18.9	3.00	18.2	2.92	17.6	2.81	16.4	2.62
	24.0	20.5	21.7	3.24	20.3	3.08	18.9	2.79	18.2	2.82	17.6	2.70	16.4	2.51

GMV-400WM/B-X(P)

TC—Total capacity of outdoor unit; PI—Power input of outdoor unit														
Connection ratio	Outdoor air temp.（℃）		Indoor air temp.（℃ DB）											
			16		18		20		21		22		24	
			TC	PI	TC	PI	TC	PI	TC	PI	TC	PI	TC	PI
	℃ DB	℃ WB	kW	kW	kW	kW	kW	kW	kW	kW	kW	kW	kW	kW
135%	-19.8	-20.0	37.4	9.28	37.2	9.93	37.1	10.48	37.2	10.84	37.1	11.23	37.1	11.91
	-18.8	-19.0	37.7	9.43	37.7	10.11	37.5	10.55	37.5	10.96	37.5	11.28	37.4	11.99
	-16.7	-17.0	38.4	9.67	38.3	10.30	38.1	10.76	38.2	11.05	38.1	11.41	38.0	12.09
	-13.7	-15.0	39.0	9.88	39.0	10.48	38.8	10.89	38.8	11.21	38.8	11.56	38.7	12.15
	-11.8	-13.0	39.6	10.08	39.6	10.60	39.4	10.96	39.5	11.32	39.4	11.60	39.3	12.19
	-9.8	-11.0	40.3	10.22	40.3	10.74	40.1	11.07	40.1	11.36	40.1	11.62	40.0	12.17
	-9.5	-10.0	40.6	10.26	40.6	10.75	40.4	11.07	40.4	11.35	40.4	11.64	40.3	12.12
	-8.5	-9.1	41.0	10.33	40.8	10.78	40.8	11.07	40.7	11.35	40.8	11.62	40.7	12.14
	-7.0	-7.6	41.4	10.37	41.3	10.79	41.3	11.09	41.2	11.32	41.2	11.58	41.1	12.08
	-5.0	-5.6	44.0	10.87	44.0	11.08	43.9	11.59	43.8	11.81	43.9	12.09	43.7	12.49
	-3.0	-3.7	44.6	10.87	44.6	11.28	44.5	11.48	44.5	11.73	44.4	11.94	44.3	12.36
	0.0	-0.7	45.6	10.80	45.6	11.12	45.5	11.32	45.5	11.50	45.4	11.73	45.3	12.07
	3.0	2.2	48.5	11.08	48.4	11.38	48.2	11.55	48.2	11.72	48.2	11.91	48.1	12.23
	5.0	4.1	51.0	11.36	50.8	11.65	50.8	11.79	50.7	11.96	50.7	12.14	50.5	12.45
	7.0	6.0	53.5	11.62	53.4	11.89	53.4	12.03	53.2	10.88	53.2	12.35	51.1	11.89
	9.0	7.9	56.2	11.86	56.1	12.13	56.1	12.24	56.0	12.40	54.8	12.18	51.1	11.18
	11.0	9.8	59.1	12.10	59.0	12.34	58.7	12.37	56.7	11.91	54.8	11.45	51.1	10.53
	13.0	11.8	62.2	12.33	62.1	12.57	58.7	11.60	56.7	11.16	54.8	10.75	51.1	9.88
	15.0	13.7	65.2	12.54	62.4	11.90	58.7	10.93	56.7	10.53	54.8	10.13	51.1	9.33
	18.0	16.8	65.2	11.87	62.4	11.33	58.7	10.37	56.7	10.01	54.8	9.57	51.1	8.86
	20.0	18.5	65.2	11.30	62.4	10.82	58.7	9.90	56.7	9.56	54.8	9.10	51.1	8.47
	24.0	20.5	65.2	10.81	62.4	10.41	58.7	9.52	56.7	9.19	54.8	8.69	51.1	8.16
120%	-19.8	-20.0	37.2	10.17	37.1	10.80	37.1	11.28	37.0	11.58	37.1	11.94	37.0	12.63
	-18.8	-19.0	37.5	10.30	37.5	10.93	37.4	11.21	37.4	11.68	37.4	12.04	37.3	12.71
	-16.7	-17.0	38.2	10.49	38.1	11.08	38.1	11.44	38.0	11.78	38.0	12.11	38.0	12.74
	-13.7	-15.0	38.9	10.65	38.8	11.20	38.7	11.57	38.8	11.89	38.7	12.17	38.7	12.76
	-11.8	-13.0	39.5	10.79	39.4	11.26	39.4	11.61	39.4	11.90	39.3	12.21	39.3	12.72
	-9.8	-11.0	40.2	10.88	40.1	11.35	40.0	11.62	40.1	11.95	40.0	12.18	40.0	12.73
	-9.5	-10.0	40.5	10.90	40.4	11.36	40.3	11.64	40.4	11.91	40.3	12.05	40.3	12.65
	-8.5	-9.1	40.8	10.95	40.8	11.39	40.7	11.62	40.7	11.89	40.7	12.16	40.6	12.65
	-7.0	-7.6	41.3	10.98	41.2	11.33	41.1	11.58	41.2	11.83	41.1	12.08	41.0	12.49
	-5.0	-5.6	44.0	11.44	43.9	11.85	43.8	12.09	43.8	12.30	43.8	12.54	43.7	12.94
	-3.0	-3.7	44.6	11.41	44.5	11.75	44.4	11.92	44.4	12.14	44.3	12.38	44.3	12.74
	0.0	-0.7	45.6	11.27	45.5	11.56	45.4	11.85	45.4	11.91	45.3	12.11	45.3	12.44
	3.0	2.2	48.4	11.49	48.2	11.77	48.2	11.90	48.1	12.07	48.1	12.24	47.1	12.21
	5.0	4.1	50.8	11.75	50.7	12.01	50.7	12.13	50.5	12.29	50.5	12.45	47.1	11.47
	7.0	6.0	53.4	11.98	53.4	12.23	53.2	12.34	52.4	12.20	50.7	11.73	47.1	10.79
	9.0	7.9	56.1	12.22	56.0	12.46	54.1	11.91	52.4	11.47	50.7	11.03	47.1	10.16
	11.0	9.8	59.0	12.44	57.5	12.22	54.1	11.21	52.4	10.80	50.7	10.39	47.1	9.58
	13.0	11.8	61.1	12.32	57.5	11.46	54.1	10.52	52.4	10.14	50.7	9.77	47.1	9.01
	15.0	13.7	61.1	11.60	57.5	10.80	54.1	9.93	52.4	9.57	50.7	9.22	47.1	8.50
	18.0	16.8	61.1	10.96	57.5	10.22	54.1	9.43	52.4	9.07	50.7	8.73	47.1	8.07
	20.0	18.5	61.1	10.38	57.5	9.76	54.1	9.03	52.4	8.65	50.7	8.32	47.1	7.68
	24.0	20.5	61.1	9.88	57.5	9.36	54.1	8.70	52.4	8.29	50.7	7.99	47.1	7.37

GMV X DC Inverter VRF Units

TC—Total capacity of outdoor unit; PI—Power input of outdoor unit														
Connection ratio	Outdoor air temp.（℃）		Indoor air temp.（℃ DB）											
			16		18		20		21		22		24	
			TC	PI	TC	PI	TC	PI	TC	PI	TC	PI	TC	PI
	℃ DB	℃ WB	kW	kW	kW	kW	kW	kW	kW	kW	kW	kW	kW	kW
110%	-19.8	-20.0	37.1	11.10	37.1	11.68	37.0	12.08	37.0	12.37	37.0	12.70	36.9	13.35
	-18.8	-19.0	37.5	11.20	37.4	11.73	37.4	12.11	37.3	12.39	37.3	12.78	37.3	13.34
	-16.7	-17.0	38.1	11.34	38.1	11.88	38.0	12.18	37.9	12.50	38.0	12.82	37.9	13.41
	-13.7	-15.0	38.8	11.44	38.7	11.96	38.7	12.27	38.6	12.53	38.7	12.83	38.6	13.38
	-11.8	-13.0	39.4	11.55	39.4	11.97	39.3	12.26	39.2	12.49	39.3	12.82	39.2	13.30
	-9.8	-11.0	40.1	11.57	40.0	12.02	40.0	12.22	39.9	12.51	40.0	12.76	39.9	13.19
	-9.5	-10.0	40.4	11.56	40.3	11.98	40.3	12.23	40.2	12.45	40.3	12.69	40.2	13.16
	-8.5	-9.1	40.8	11.59	40.7	12.01	40.7	12.19	40.6	12.40	40.6	12.70	40.6	13.09
	-7.0	-7.6	41.2	11.57	41.1	11.90	41.1	12.11	41.1	12.34	41.0	12.40	41.0	12.97
	-5.0	-5.6	43.9	12.03	43.8	12.41	43.7	12.57	43.7	12.79	43.7	12.41	42.7	13.13
	-3.0	-3.7	44.4	11.92	44.4	12.22	44.3	12.40	44.3	12.60	44.5	11.90	41.1	12.24
	0.0	-0.7	45.4	11.71	45.4	11.98	45.3	12.12	45.3	12.30	46.4	12.26	43.2	12.06
	3.0	2.2	48.2	11.91	48.1	12.16	48.1	12.25	48.0	12.40	46.4	11.93	43.2	10.97
	5.0	4.1	50.7	12.13	50.7	12.38	49.7	12.11	48.0	11.66	46.4	11.23	43.2	10.33
	7.0	6.0	53.2	12.36	52.8	12.43	49.7	11.38	48.0	10.96	46.4	10.55	43.2	9.72
	9.0	7.9	56.0	12.56	52.8	11.69	49.7	10.72	48.0	10.32	46.4	9.94	43.2	9.16
	11.0	9.8	56.0	11.81	52.8	11.00	49.7	10.09	48.0	9.73	46.4	9.37	43.2	8.65
	13.0	11.8	56.0	11.08	52.8	10.32	49.7	9.49	48.0	9.16	46.4	8.82	43.2	8.15
	15.0	13.7	56.0	10.44	52.8	9.73	49.7	8.97	48.0	8.64	46.4	8.34	43.2	7.71
	18.0	16.8	56.0	9.88	52.8	9.22	49.7	8.18	48.0	8.20	46.4	7.95	43.2	7.34
	20.0	18.5	56.0	9.37	52.8	8.77	49.7	7.76	48.0	7.80	46.4	7.62	43.2	7.02
	24.0	20.5	56.0	8.95	52.8	8.37	49.7	7.40	48.0	7.47	46.4	7.34	43.2	6.76
100%	-19.8	-20.0	36.9	11.96	36.9	12.51	36.8	12.76	36.7	13.10	36.7	13.37	36.6	13.98
	-18.8	-19.0	37.2	12.04	37.2	12.53	37.1	12.82	37.0	13.10	37.0	13.43	36.9	13.95
	-16.7	-17.0	37.9	12.12	37.9	12.64	37.8	12.85	37.7	13.10	37.6	13.40	37.5	13.89
	-13.7	-15.0	38.6	12.21	38.5	12.67	38.4	12.85	38.4	13.16	38.2	13.35	38.1	13.87
	-11.8	-13.0	39.2	12.26	39.1	12.62	39.0	12.84	39.0	13.07	38.8	12.79	38.2	13.56
	-9.8	-11.0	39.9	12.23	39.8	12.63	39.7	12.75	39.6	12.97	39.4	13.17	38.2	13.18
	-9.5	-10.0	40.2	12.19	40.1	12.57	40.0	12.70	40.0	12.95	39.7	13.08	38.2	13.04
	-8.5	-9.1	40.4	12.14	40.3	12.47	40.2	12.62	40.3	12.85	39.9	13.00	38.2	12.83
	-7.0	-7.6	40.8	12.08	40.7	12.38	40.6	12.52	40.6	12.71	40.4	12.85	38.2	12.56
	-5.0	-5.6	43.1	12.41	43.0	12.73	42.9	12.82	42.9	13.08	41.6	12.84	39.1	12.41
	-3.0	-3.7	43.7	12.28	43.6	12.53	43.5	12.65	43.3	12.78	41.6	12.44	39.4	11.81
	0.0	-0.7	44.6	11.99	44.5	12.20	44.4	12.29	43.7	12.13	42.2	11.66	39.4	10.75
	3.0	2.2	48.1	12.31	48.0	12.53	45.0	11.42	43.7	11.03	42.2	10.63	39.4	9.78
	5.0	4.1	50.5	12.53	48.0	11.77	45.0	10.75	43.7	10.39	42.2	10.01	39.4	9.23
	7.0	6.0	50.8	11.89	48.0	11.06	45.0	9.98	43.7	9.79	42.2	9.43	39.4	8.70
	9.0	7.9	50.8	11.17	48.0	10.41	45.0	9.48	43.7	9.23	42.2	8.89	39.4	8.21
	11.0	9.8	50.8	10.52	48.0	9.81	45.0	8.95	43.7	8.70	42.2	8.39	39.4	7.76
	13.0	11.8	50.8	9.88	48.0	9.23	45.0	8.43	43.7	8.21	42.2	7.92	39.4	7.32
	15.0	13.7	50.8	9.32	48.0	8.71	45.0	7.97	43.7	7.76	42.2	7.48	39.4	6.94
	18.0	16.8	50.8	8.79	48.0	8.31	45.0	7.71	43.7	7.36	42.2	7.09	39.4	6.61
	20.0	18.5	50.8	8.29	48.0	7.97	45.0	7.40	43.7	7.04	42.2	6.76	39.4	6.34
	24.0	20.5	50.8	7.84	48.0	7.71	45.0	7.12	43.7	6.77	42.2	6.49	39.4	6.15

TC—Total capacity of outdoor unit; PI—Power input of outdoor unit														
Connection ratio	Outdoor air temp.（℃）		Indoor air temp.（℃ DB）											
			16		18		20		21		22		24	
			TC	PI	TC	PI	TC	PI	TC	PI	TC	PI	TC	PI
	℃ DB	℃ WB	kW	kW	kW	kW	kW	kW	kW	kW	kW	kW	kW	kW
90%	-19.8	-20.0	36.8	12.89	36.7	13.37	36.7	13.55	36.8	13.92	36.7	14.19	34.5	13.83
	-18.8	-19.0	37.1	12.95	37.1	13.38	37.0	13.61	37.1	13.91	37.0	14.16	34.6	13.75
	-16.7	-17.0	37.8	12.99	37.7	13.44	37.7	13.59	37.7	13.88	37.8	14.21	34.6	13.45
	-13.7	-15.0	38.5	12.99	38.4	13.42	38.3	13.54	38.4	13.74	37.8	13.91	34.7	13.14
	-11.8	-13.0	39.1	12.98	39.0	13.32	38.9	13.48	39.0	13.74	37.8	13.55	34.7	12.84
	-9.8	-11.0	39.7	12.89	39.7	13.20	39.6	13.35	39.4	13.50	37.9	13.20	34.7	12.48
	-9.5	-10.0	40.1	12.83	40.0	13.19	39.9	13.26	39.4	13.35	37.9	13.05	35.0	12.35
	-8.5	-9.1	40.4	12.80	40.3	13.09	40.2	13.22	39.4	13.13	37.9	12.83	35.4	12.28
	-7.0	-7.6	40.7	12.66	40.7	12.96	40.7	13.08	39.3	12.84	37.8	12.53	35.4	11.73
	-5.0	-5.6	43.0	12.99	43.0	13.29	40.6	12.63	39.2	12.35	38.0	11.98	35.4	11.03
	-3.0	-3.7	43.5	12.79	43.6	11.64	40.6	12.16	39.2	11.71	38.0	11.29	35.4	10.40
	0.0	-0.7	44.4	12.39	43.7	10.88	40.6	11.05	39.2	10.65	38.0	10.27	35.4	9.46
	3.0	2.2	45.8	11.82	43.7	11.13	40.6	10.07	39.2	9.72	38.0	9.37	35.4	8.66
	5.0	4.1	46.7	11.35	43.7	10.47	40.6	9.50	39.2	9.16	38.0	8.85	35.4	8.17
	7.0	6.0	46.7	10.67	43.7	9.86	40.6	8.96	39.2	8.65	38.0	8.35	35.4	7.72
	9.0	7.9	46.7	10.06	43.7	9.28	40.6	8.45	39.2	8.17	38.0	7.89	35.4	7.30
	11.0	9.8	46.7	9.47	43.7	8.76	40.6	7.99	39.2	7.72	38.0	7.45	35.4	6.91
	13.0	11.8	46.7	8.91	43.7	8.26	40.6	7.53	39.2	7.29	38.0	7.05	35.4	6.53
	15.0	13.7	46.7	8.42	43.7	7.80	40.6	7.14	39.2	6.88	38.0	6.68	35.4	6.20
	18.0	16.8	46.7	7.95	43.7	7.37	40.6	6.77	39.2	6.50	38.0	6.33	35.4	5.89
	20.0	18.5	46.7	7.52	43.7	6.97	40.6	6.43	39.2	6.13	38.0	6.02	35.4	5.63
	24.0	20.5	46.7	7.10	43.7	6.58	40.6	6.10	39.2	5.79	38.0	5.71	35.4	5.38
80%	-19.8	-20.0	36.7	13.82	36.7	14.26	36.2	14.20	34.9	13.92	33.5	13.68	30.8	12.95
	-18.8	-19.0	37.1	13.86	37.0	14.24	36.3	14.12	34.9	13.84	33.5	13.52	30.8	12.87
	-16.7	-17.0	37.7	13.85	37.7	14.26	36.3	13.84	34.9	13.54	33.6	13.22	30.8	12.56
	-13.7	-15.0	38.4	13.80	38.3	14.18	36.4	13.53	35.0	13.22	33.6	12.96	31.1	12.33
	-11.8	-13.0	39.0	13.73	38.9	14.04	36.4	13.22	35.0	12.92	33.6	12.60	31.5	11.91
	-9.8	-11.0	39.7	13.59	39.2	13.73	36.4	12.85	35.1	12.55	33.8	12.22	31.5	11.25
	-9.5	-10.0	40.0	13.50	39.2	13.57	36.4	12.64	35.1	12.35	33.8	11.87	31.5	10.92
	-8.5	-9.1	40.2	13.42	39.2	13.36	36.4	12.49	35.1	12.05	33.8	11.55	31.5	10.63
	-7.0	-7.6	40.6	13.28	39.1	13.04	36.4	11.98	35.0	11.48	33.8	11.04	31.5	10.21
	-5.0	-5.6	41.6	11.70	38.9	12.44	36.1	11.20	35.0	10.79	33.8	10.39	31.5	9.58
	-3.0	-3.7	41.6	11.32	38.9	11.71	36.1	10.55	35.0	10.22	33.8	9.80	31.5	9.05
	0.0	-0.7	41.6	11.51	38.9	10.63	36.1	9.62	35.0	9.28	33.8	8.94	31.5	8.26
	3.0	2.2	41.6	10.49	38.9	9.69	36.1	8.80	35.0	8.48	33.8	8.19	31.5	7.57
	5.0	4.1	41.6	9.87	38.9	9.14	36.1	8.30	35.0	8.01	33.8	7.74	31.5	7.16
	7.0	6.0	41.6	9.30	38.9	8.64	36.1	7.85	35.0	7.58	33.8	7.32	31.5	6.78
	9.0	7.9	41.6	8.78	38.9	8.14	36.1	7.45	35.0	7.16	33.8	6.92	31.5	6.42
	11.0	9.8	41.6	8.29	38.9	7.69	36.1	7.02	35.0	6.78	33.8	6.55	31.5	6.09
	13.0	11.8	41.6	7.81	38.9	7.26	36.1	6.64	35.0	6.41	33.8	6.20	31.5	5.76
	15.0	13.7	41.6	7.39	38.9	6.88	36.1	6.30	35.0	6.08	33.8	5.88	31.5	5.48
	18.0	16.8	41.6	7.05	38.9	6.54	36.1	5.99	35.0	5.78	33.8	5.58	31.5	5.23
	20.0	18.5	41.6	6.78	38.9	6.27	36.1	5.73	35.0	5.52	33.8	5.31	31.5	4.99
	24.0	20.5	41.6	6.58	38.9	6.07	36.1	5.49	35.0	5.28	33.8	5.08	31.5	4.78

GMV X DC Inverter VRF Units

TC—Total capacity of outdoor unit; PI—Power input of outdoor unit														
Connection ratio	Outdoor air temp.（℃）		Indoor air temp.（℃ DB）											
			16		18		20		21		22		24	
			TC	PI	TC	PI	TC	PI	TC	PI	TC	PI	TC	PI
	℃ DB	℃ WB	kW	kW	kW	kW	kW	kW	kW	kW	kW	kW	kW	kW
70%	-19.8	-20.0	36.5	14.68	34.1	14.11	31.7	13.16	30.6	12.88	29.4	12.59	27.5	12.02
	-18.8	-19.0	36.5	14.60	34.1	13.96	31.8	13.06	30.6	12.78	29.4	12.49	27.5	11.77
	-16.7	-17.0	36.6	14.28	34.2	13.65	31.8	12.76	30.6	12.49	29.4	12.16	27.5	11.23
	-13.7	-15.0	36.6	13.95	34.2	13.38	31.8	12.45	30.7	12.10	29.5	11.58	27.5	10.68
	-11.8	-13.0	36.6	13.63	34.2	12.99	31.8	11.88	30.7	11.47	29.5	10.99	27.5	10.13
	-9.8	-11.0	36.7	13.23	34.3	12.51	31.9	11.25	30.7	10.86	29.6	10.40	27.5	9.59
	-9.5	-10.0	36.7	13.02	34.3	12.15	31.9	10.94	30.8	10.55	29.6	10.12	27.5	9.32
	-8.5	-9.1	36.7	12.83	34.3	11.82	31.9	10.65	30.8	10.28	29.6	9.86	27.5	9.09
	-7.0	-7.6	36.6	12.23	34.2	11.27	31.8	10.18	30.7	9.83	29.5	9.42	27.5	8.71
	-5.0	-5.6	36.4	11.42	34.0	10.54	31.7	9.53	30.5	9.20	29.5	8.88	27.5	8.22
	-3.0	-3.7	36.4	10.76	34.0	9.94	31.7	9.00	30.5	8.69	29.5	8.39	27.5	7.77
	0.0	-0.7	36.4	9.79	34.0	9.10	31.7	8.23	30.5	7.95	29.5	7.68	27.5	7.12
	3.0	2.2	36.4	8.95	34.0	8.30	31.7	7.55	30.5	7.29	29.5	7.05	27.5	6.54
	5.0	4.1	36.4	8.44	34.0	7.82	31.7	7.15	30.5	6.90	29.5	6.68	27.5	6.20
	7.0	6.0	36.4	7.98	34.0	7.40	31.7	6.76	30.5	6.53	29.5	6.33	27.5	5.88
	9.0	7.9	36.4	7.55	34.0	7.00	31.7	6.40	30.5	6.19	29.5	6.00	27.5	5.57
	11.0	9.8	36.4	7.14	34.0	6.62	31.7	6.08	30.5	5.88	29.5	5.69	27.5	5.30
	13.0	11.8	36.4	6.74	34.0	6.27	31.7	5.75	30.5	5.58	29.5	5.39	27.5	5.03
	15.0	13.7	36.4	6.39	34.0	5.95	31.7	5.46	30.5	5.30	29.5	5.13	27.5	4.79
	18.0	16.8	36.4	6.06	34.0	5.65	31.7	5.21	30.5	5.05	29.5	4.89	27.5	4.58
	20.0	18.5	36.4	5.77	34.0	5.38	31.7	4.97	30.5	4.82	29.5	4.68	27.5	4.39
	24.0	20.5	36.4	5.52	34.0	5.13	31.7	4.77	30.5	4.63	29.5	4.51	27.5	4.23
60%	-19.8	-20.0	31.4	13.47	29.3	12.87	27.2	11.67	26.3	11.22	25.4	10.82	23.7	9.98
	-18.8	-19.0	31.4	13.37	29.3	12.71	27.2	11.44	26.3	11.00	25.4	10.59	23.7	9.77
	-16.7	-17.0	31.4	13.04	29.4	12.19	27.3	10.93	26.3	10.52	25.4	10.12	23.7	9.35
	-13.7	-15.0	31.5	12.62	29.4	11.61	27.3	10.42	26.4	10.04	25.4	9.64	23.7	8.90
	-11.8	-13.0	31.5	11.94	29.4	10.99	27.3	9.89	26.4	9.53	25.4	9.15	23.7	8.46
	-9.8	-11.0	31.6	11.30	29.5	10.41	27.4	9.39	26.4	9.03	25.4	8.67	23.7	8.03
	-9.5	-10.0	31.6	10.99	29.5	10.13	27.4	9.13	26.4	8.80	25.4	8.44	23.7	7.81
	-8.5	-9.1	31.6	10.70	29.5	9.87	27.4	8.91	26.4	8.58	25.4	8.23	23.7	7.62
	-7.0	-7.6	31.5	10.21	29.4	9.43	27.3	8.52	26.4	8.21	25.4	7.89	23.7	7.32
	-5.0	-5.6	31.3	9.56	29.2	8.83	27.2	8.00	26.2	7.71	25.4	7.45	23.7	6.92
	-3.0	-3.7	31.3	9.03	29.2	8.34	27.2	7.60	26.2	7.30	25.4	7.06	23.7	6.55
	0.0	-0.7	31.3	8.25	29.2	7.64	27.2	6.95	26.2	6.70	25.4	6.48	23.7	6.02
	3.0	2.2	31.3	7.56	29.2	7.02	27.2	6.40	26.2	6.17	25.4	5.98	23.7	5.56
	5.0	4.1	31.3	7.15	29.2	6.64	27.2	6.06	26.2	5.86	25.4	5.67	23.7	5.28
	7.0	6.0	31.3	6.77	29.2	6.29	27.2	5.75	26.2	5.55	25.4	5.39	23.7	5.02
	9.0	7.9	31.3	6.41	29.2	5.96	27.2	5.46	26.2	5.28	25.4	5.11	23.7	4.78
	11.0	9.8	31.3	6.08	29.2	5.66	27.2	5.20	26.2	5.02	25.4	4.86	23.7	4.55
	13.0	11.8	31.3	5.75	29.2	5.37	27.2	4.93	26.2	4.77	25.4	4.62	23.7	4.33
	15.0	13.7	31.3	5.48	29.2	5.10	27.2	4.70	26.2	4.54	25.4	4.41	23.7	4.13
	18.0	16.8	31.3	5.23	29.2	4.84	27.2	4.49	26.2	4.34	25.4	4.23	23.7	3.96
	20.0	18.5	31.3	5.01	29.2	4.63	27.2	4.31	26.2	4.17	25.4	4.07	23.7	3.81
	24.0	20.5	31.3	4.82	29.2	4.44	27.2	4.15	26.2	4.03	25.4	3.94	23.7	3.68

TC—Total capacity of outdoor unit; PI—Power input of outdoor unit														
Connection ratio	Outdoor air temp.（℃）		Indoor air temp.（℃ DB）											
			16		18		20		21		22		24	
			TC	PI	TC	PI	TC	PI	TC	PI	TC	PI	TC	PI
	℃ DB	℃ WB	kW	kW	kW	kW	kW	kW	kW	kW	kW	kW	kW	kW
50%	-19.8	-20.0	26.2	11.31	24.4	10.39	22.7	9.35	21.8	9.05	21.1	8.72	19.7	8.08
	-18.8	-19.0	26.2	11.08	24.4	10.18	22.7	9.18	21.9	8.86	21.1	8.54	19.7	7.92
	-16.7	-17.0	26.2	10.58	24.4	9.74	22.7	8.79	21.9	8.49	21.1	8.19	19.7	7.59
	-13.7	-15.0	26.3	10.09	24.5	9.29	22.8	8.39	21.9	8.12	21.1	7.81	19.7	7.25
	-11.8	-13.0	26.3	9.58	24.5	8.85	22.8	7.99	21.9	7.73	21.1	7.43	19.7	6.91
	-9.8	-11.0	26.3	9.09	24.5	8.38	22.8	7.60	22.0	7.35	21.1	7.07	19.7	6.56
	-9.5	-10.0	26.3	8.85	24.5	8.16	22.8	7.41	22.0	7.17	21.1	6.88	19.7	6.39
	-8.5	-9.1	26.3	8.63	24.5	7.97	22.8	7.23	22.0	7.00	21.1	6.73	19.7	6.25
	-7.0	-7.6	26.3	8.25	24.5	7.65	22.8	6.93	21.9	6.71	21.1	6.46	19.7	6.01
	-5.0	-5.6	26.1	7.74	24.3	7.16	22.7	6.53	21.8	6.32	21.1	6.12	19.7	5.69
	-3.0	-3.7	26.1	7.33	24.3	6.79	22.7	6.19	21.8	5.99	21.1	5.81	19.7	5.41
	0.0	-0.7	26.1	6.73	24.3	6.23	22.7	5.71	21.8	5.52	21.1	5.36	19.7	5.00
	3.0	2.2	26.1	6.19	24.3	5.75	22.7	5.27	21.8	5.11	21.1	4.96	19.7	4.63
	5.0	4.1	26.1	5.88	24.3	5.45	22.7	5.00	21.8	4.86	21.1	4.71	19.7	4.41
	7.0	6.0	26.1	5.58	24.3	5.18	22.7	4.77	21.8	4.62	21.1	4.49	19.7	4.21
	9.0	7.9	26.1	5.29	24.3	4.93	22.7	4.53	21.8	4.41	21.1	4.28	19.7	4.01
	11.0	9.8	26.1	5.03	24.3	4.68	22.7	4.32	21.8	4.20	21.1	4.08	19.7	3.82
	13.0	11.8	26.1	4.79	24.3	4.45	22.7	4.12	21.8	4.00	21.1	3.88	19.7	3.65
	15.0	13.7	26.1	4.55	24.3	4.25	22.7	3.93	21.8	3.82	21.1	3.71	19.7	3.48
	18.0	16.8	26.1	4.33	24.3	4.05	22.7	3.78	21.8	3.66	21.1	3.55	19.7	3.32
	20.0	18.5	26.1	4.12	24.3	3.88	22.7	3.64	21.8	3.53	21.1	3.41	19.7	3.17
	24.0	20.5	26.1	3.93	24.3	3.72	22.7	3.39	21.8	3.41	21.1	3.27	19.7	3.04

GMV-450WM/B-X(P)

TC—Total capacity of outdoor unit; PI—Power input of outdoor unit														
Connection ratio	Outdoor air temp. (℃)		Indoor air temp. (℃ DB)											
			16		18		20		21		22		24	
			TC	PI	TC	PI	TC	PI	TC	PI	TC	PI	TC	PI
	℃ DB	℃ WB	kW	kW	kW	kW	kW	kW	kW	kW	kW	kW	kW	kW
135%	-19.8	-20.0	39.4	10.30	39.3	11.05	39.3	11.65	39.2	12.02	39.1	12.46	39.1	13.22
	-18.8	-19.0	39.9	10.51	39.8	11.24	39.7	11.76	39.6	12.19	39.6	12.54	39.5	13.34
	-16.7	-17.0	40.8	10.82	40.7	11.52	40.5	12.04	40.5	12.33	40.5	12.77	40.4	13.50
	-13.7	-15.0	41.6	11.10	41.6	11.77	41.5	12.26	41.5	12.59	41.4	12.99	41.3	13.65
	-11.8	-13.0	42.6	11.39	42.4	11.95	42.3	12.39	42.3	12.76	42.2	13.08	42.2	13.75
	-9.8	-11.0	43.4	11.59	43.4	12.18	43.2	12.56	43.2	12.86	43.2	13.18	43.1	13.79
	-9.5	-10.0	43.8	11.66	43.8	12.22	43.6	12.58	43.7	12.90	43.6	13.23	43.6	13.78
	-8.5	-9.1	44.3	11.77	44.2	12.28	44.1	12.60	44.1	12.93	44.1	13.23	43.9	13.80
	-7.0	-7.6	44.9	11.85	44.9	12.33	44.7	12.64	44.8	12.93	44.7	13.24	44.7	13.81
	-5.0	-5.6	45.6	11.87	45.6	12.10	45.4	12.62	45.5	12.89	45.4	13.16	45.4	13.63
	-3.0	-3.7	46.5	11.91	46.4	12.36	46.2	12.55	46.3	12.86	46.2	13.08	46.2	13.55
	0.0	-0.7	49.9	12.45	49.9	12.83	49.8	13.03	49.8	13.25	49.6	13.49	49.6	13.90
	3.0	2.2	66.7	16.03	66.6	16.51	66.1	16.65	63.6	16.27	61.1	15.89	56.1	15.02
	5.0	4.1	75.2	17.64	70.2	16.95	65.3	15.93	62.8	15.60	60.4	15.22	56.1	14.55
	7.0	6.0	75.2	17.20	70.3	16.48	65.3	15.49	62.9	13.52	60.4	14.75	56.8	13.91
	9.0	7.9	75.3	16.72	70.4	16.01	65.4	15.02	62.9	14.68	60.9	14.24	56.8	13.07
	11.0	9.8	75.3	16.24	70.4	15.50	65.4	14.50	62.9	13.92	60.9	13.38	56.8	12.31
	13.0	11.8	75.3	15.70	70.4	14.99	65.4	13.60	62.9	13.04	60.9	12.57	56.8	11.56
	15.0	13.7	75.3	15.24	70.4	14.13	65.4	12.82	62.9	12.31	60.9	11.84	56.8	10.91
	18.0	16.8	75.3	14.43	70.4	13.45	65.4	12.16	62.9	11.69	60.9	11.20	56.8	10.37
	20.0	18.5	75.3	13.73	70.4	12.85	65.4	11.61	62.9	11.17	60.9	10.64	56.8	9.90
	24.0	20.5	75.3	13.14	70.4	12.36	65.4	11.16	62.9	10.74	60.9	10.16	56.8	9.54
120%	-19.8	-20.0	39.3	11.32	39.3	12.02	39.1	12.51	39.1	12.88	39.1	13.24	39.0	14.01
	-18.8	-19.0	39.8	11.49	39.7	12.19	39.5	12.46	39.6	13.02	39.5	13.38	39.5	14.13
	-16.7	-17.0	40.6	11.74	40.5	12.41	40.5	12.79	40.4	13.19	40.5	13.56	40.3	14.23
	-13.7	-15.0	41.6	12.00	41.4	12.59	41.4	13.00	41.4	13.36	41.3	13.68	41.3	14.35
	-11.8	-13.0	42.4	12.20	42.3	12.74	42.2	13.09	42.2	13.42	42.2	13.77	42.1	14.35
	-9.8	-11.0	43.3	12.35	43.2	12.89	43.2	13.19	43.1	13.52	43.2	13.82	43.0	14.41
	-9.5	-10.0	43.7	12.39	43.6	12.92	43.6	13.23	43.5	13.51	43.6	13.70	43.4	14.35
	-8.5	-9.1	44.2	12.47	44.1	12.98	44.1	13.23	44.0	13.54	43.9	13.82	43.9	14.38
	-7.0	-7.6	44.8	12.52	44.7	12.95	44.7	13.24	44.6	13.49	44.7	13.81	44.5	14.25
	-5.0	-5.6	45.6	12.49	45.4	12.91	45.4	13.16	45.3	13.39	45.4	13.65	45.2	14.10
	-3.0	-3.7	46.3	12.48	46.2	12.85	46.2	13.06	46.1	13.27	46.2	13.57	46.0	13.94
	0.0	-0.7	49.8	12.96	49.8	13.32	49.6	13.64	49.6	13.69	49.5	13.90	49.5	14.30
	3.0	2.2	66.6	16.67	65.7	16.88	61.1	15.85	58.8	15.53	56.5	15.13	52.3	14.27
	5.0	4.1	69.4	16.89	64.9	16.18	60.3	15.18	58.0	14.86	56.1	14.56	52.3	13.41
	7.0	6.0	69.5	16.42	64.9	15.67	60.4	14.72	58.1	14.24	56.3	13.71	52.3	12.62
	9.0	7.9	69.5	15.95	65.0	15.24	60.4	14.00	58.2	13.40	56.3	12.90	52.3	11.88
	11.0	9.8	69.5	15.45	65.0	14.53	60.4	13.17	58.2	12.62	56.3	12.15	52.3	11.20
	13.0	11.8	69.5	14.76	65.0	13.63	60.4	12.36	58.2	11.85	56.3	11.42	52.3	10.53
	15.0	13.7	69.5	13.90	65.0	12.84	60.4	11.67	58.2	11.18	56.3	10.78	52.3	9.95
	18.0	16.8	69.5	13.13	65.0	12.16	60.4	11.09	58.2	10.60	56.3	10.21	52.3	9.43
	20.0	18.5	69.5	12.44	65.0	11.60	60.4	10.61	58.2	10.11	56.3	9.73	52.3	8.99
	24.0	20.5	69.5	11.84	65.0	11.13	60.4	10.23	58.2	9.69	56.3	9.34	52.3	8.61

TC—Total capacity of outdoor unit; PI—Power input of outdoor unit														
Connection ratio	Outdoor air temp.（℃）		Indoor air temp.（℃ DB）											
			16		18		20		21		22		24	
			TC	PI	TC	PI	TC	PI	TC	PI	TC	PI	TC	PI
	℃ DB	℃ WB	kW	kW	kW	kW	kW	kW	kW	kW	kW	kW	kW	kW
110%	-19.8	-20.0	39.2	12.32	39.1	12.96	39.0	13.40	39.0	13.73	39.0	14.09	38.9	14.82
	-18.8	-19.0	39.6	12.46	39.5	13.04	39.5	13.46	39.5	13.81	39.5	14.21	39.4	14.84
	-16.7	-17.0	40.5	12.69	40.5	13.31	40.3	13.60	40.4	14.00	40.3	14.32	40.2	14.98
	-13.7	-15.0	41.4	12.86	41.4	13.45	41.3	13.79	41.2	14.08	41.3	14.42	41.1	15.01
	-11.8	-13.0	42.2	13.03	42.2	13.51	42.1	13.82	42.2	14.13	42.1	14.47	42.0	15.01
	-9.8	-11.0	43.2	13.14	43.2	13.64	43.0	13.83	43.1	14.19	43.0	14.45	42.9	14.95
	-9.5	-10.0	43.6	13.15	43.6	13.63	43.5	13.90	43.5	14.15	43.4	14.40	43.3	14.94
	-8.5	-9.1	44.1	13.20	44.0	13.65	43.9	13.85	43.9	14.12	43.9	14.43	43.8	14.88
	-7.0	-7.6	44.7	13.23	44.7	13.60	44.6	13.84	44.6	14.08	44.5	14.14	44.4	14.80
	-5.0	-5.6	45.4	13.11	45.4	13.52	45.3	13.71	45.3	13.93	45.7	13.65	45.1	14.61
	-3.0	-3.7	46.2	13.07	46.2	13.39	46.1	13.58	46.1	13.77	49.5	13.92	46.0	14.40
	0.0	-0.7	49.6	13.48	49.6	13.80	49.5	13.92	49.5	14.12	51.5	14.34	48.0	14.10
	3.0	2.2	64.6	16.78	60.3	16.04	56.0	15.02	54.0	14.68	51.9	14.04	48.0	12.83
	5.0	4.1	63.8	16.07	59.5	15.31	55.3	14.19	53.3	13.63	51.5	13.12	48.0	12.08
	7.0	6.0	63.8	15.60	59.6	14.76	55.4	13.36	53.3	12.83	51.5	12.34	48.0	11.37
	9.0	7.9	63.9	15.09	59.6	13.89	55.4	12.59	53.4	12.09	51.5	11.62	48.0	10.72
	11.0	9.8	63.9	14.20	59.6	13.07	55.4	11.85	53.4	11.40	51.5	10.96	48.0	10.11
	13.0	11.8	63.9	13.32	59.6	12.26	55.4	11.15	53.4	10.72	51.5	10.31	48.0	9.53
	15.0	13.7	63.9	12.55	59.6	11.56	55.4	10.54	53.4	10.13	51.5	9.76	48.0	9.02
	18.0	16.8	63.9	11.87	59.6	10.96	55.4	9.61	53.4	9.60	51.5	9.29	48.0	8.58
	20.0	18.5	63.9	11.27	59.6	10.42	55.4	9.12	53.4	9.14	51.5	8.91	48.0	8.21
	24.0	20.5	63.9	10.75	59.6	9.95	55.4	8.69	53.4	8.75	51.5	8.58	48.0	7.90
100%	-19.8	-20.0	39.0	13.31	38.9	13.89	38.8	14.16	38.7	14.54	38.7	14.84	38.5	15.48
	-18.8	-19.0	39.4	13.43	39.3	13.94	39.2	14.25	39.2	14.56	39.1	14.94	39.0	15.52
	-16.7	-17.0	40.3	13.57	40.2	14.12	40.1	14.34	40.1	14.66	39.9	14.97	39.8	15.52
	-13.7	-15.0	41.2	13.72	41.0	14.21	40.9	14.40	41.0	14.79	40.7	14.97	40.6	15.56
	-11.8	-13.0	42.1	13.84	42.0	14.25	41.8	14.48	41.8	14.74	41.6	14.43	41.5	15.51
	-9.8	-11.0	42.9	13.85	42.8	14.30	42.7	14.44	42.8	14.73	42.4	14.91	42.3	15.36
	-9.5	-10.0	43.3	13.83	43.2	14.27	43.1	14.40	43.2	14.72	42.8	14.84	42.4	15.24
	-8.5	-9.1	43.7	13.84	43.6	14.21	43.5	14.38	43.5	14.61	43.2	14.82	42.4	14.99
	-7.0	-7.6	44.3	13.79	44.2	14.13	44.1	14.28	44.1	14.54	43.8	14.66	42.4	14.68
	-5.0	-5.6	44.6	13.52	44.5	13.87	44.4	13.96	44.4	14.24	44.4	14.43	43.4	14.51
	-3.0	-3.7	45.8	13.56	45.8	13.86	45.7	13.97	45.7	14.17	45.7	14.37	43.8	13.81
	0.0	-0.7	49.5	14.01	49.5	14.28	49.3	14.36	48.5	14.18	46.9	13.64	43.8	12.57
	3.0	2.2	57.7	15.54	53.8	14.80	50.0	13.35	48.5	12.90	46.9	12.43	43.8	11.44
	5.0	4.1	57.7	15.07	53.8	13.90	50.0	12.57	48.5	12.15	46.9	11.70	43.8	10.79
	7.0	6.0	57.7	14.22	53.8	13.07	50.0	11.24	48.5	11.45	46.9	11.03	43.8	10.17
	9.0	7.9	57.7	13.36	53.8	12.30	50.0	11.08	48.5	10.79	46.9	10.40	43.8	9.60
	11.0	9.8	57.7	12.58	53.8	11.59	50.0	10.46	48.5	10.18	46.9	9.81	43.8	9.08
	13.0	11.8	57.7	11.81	53.8	10.90	50.0	9.86	48.5	9.59	46.9	9.26	43.8	8.56
	15.0	13.7	57.7	11.14	53.8	10.28	50.0	9.32	48.5	9.07	46.9	8.75	43.8	8.12
	18.0	16.8	57.7	10.51	53.8	9.81	50.0	9.02	48.5	8.61	46.9	8.29	43.8	7.73
	20.0	18.5	57.7	9.92	53.8	9.42	50.0	8.65	48.5	8.23	46.9	7.90	43.8	7.42
	24.0	20.5	57.7	9.37	53.8	9.10	50.0	8.32	48.5	7.92	46.9	7.59	43.8	7.19

GMV X DC Inverter VRF Units

TC—Total capacity of outdoor unit; PI—Power input of outdoor unit														
Connection ratio	Outdoor air temp.（℃）		Indoor air temp.（℃ DB）											
			16		18		20		21		22		24	
			TC	PI	TC	PI	TC	PI	TC	PI	TC	PI	TC	PI
	℃ DB	℃ WB	kW	kW	kW	kW	kW	kW	kW	kW	kW	kW	kW	kW
90%	-19.8	-20.0	38.8	14.31	38.8	14.85	38.7	15.04	38.8	15.45	38.7	15.75	38.4	16.16
	-18.8	-19.0	39.3	14.41	39.2	14.89	39.1	15.13	39.2	15.47	39.1	15.75	38.4	16.07
	-16.7	-17.0	40.2	14.55	40.1	15.06	40.1	15.21	40.1	15.50	40.1	15.87	38.4	15.72
	-13.7	-15.0	41.1	14.61	41.0	15.09	41.0	15.22	41.0	15.45	41.0	15.85	38.5	15.37
	-11.8	-13.0	41.9	14.65	41.8	15.04	41.8	15.21	41.9	15.51	41.8	15.74	38.5	15.01
	-9.8	-11.0	42.9	14.64	42.8	15.00	42.7	15.15	42.7	15.40	42.1	15.41	38.6	14.59
	-9.5	-10.0	43.3	14.60	43.2	15.01	43.2	15.08	43.2	15.38	42.1	15.24	38.8	14.44
	-8.5	-9.1	43.6	14.56	43.6	14.92	43.6	15.05	43.6	15.27	42.1	14.99	39.3	14.36
	-7.0	-7.6	44.2	14.49	44.2	14.80	44.1	14.92	43.8	15.03	42.0	14.63	39.3	13.71
	-5.0	-5.6	44.5	14.16	44.5	14.49	44.4	14.53	43.5	14.43	42.2	14.01	39.3	12.90
	-3.0	-3.7	45.7	14.12	45.7	12.83	45.1	14.21	43.5	13.68	42.2	13.20	39.3	12.16
	0.0	-0.7	49.5	14.52	48.0	12.60	45.1	12.91	43.5	12.44	42.2	12.00	39.3	11.07
	3.0	2.2	52.0	14.12	48.6	13.03	45.1	11.78	43.5	11.36	42.2	10.96	39.3	10.12
	5.0	4.1	52.0	13.28	48.6	12.26	45.1	11.11	43.5	10.70	42.2	10.35	39.3	9.55
	7.0	6.0	52.0	12.48	48.6	11.55	45.1	10.47	43.5	10.10	42.2	9.76	39.3	9.03
	9.0	7.9	52.0	11.77	48.6	10.87	45.1	9.88	43.5	9.54	42.2	9.22	39.3	8.53
	11.0	9.8	52.0	11.08	48.6	10.26	45.1	9.34	43.5	9.02	42.2	8.72	39.3	8.08
	13.0	11.8	52.0	10.43	48.6	9.67	45.1	8.81	43.5	8.51	42.2	8.24	39.3	7.63
	15.0	13.7	52.0	9.86	48.6	9.14	45.1	8.35	43.5	8.04	42.2	7.81	39.3	7.25
	18.0	16.8	52.0	9.32	48.6	8.63	45.1	7.92	43.5	7.59	42.2	7.40	39.3	6.89
	20.0	18.5	52.0	8.81	48.6	8.16	45.1	7.53	43.5	7.16	42.2	7.03	39.3	6.58
	24.0	20.5	52.0	8.31	48.6	7.70	45.1	7.14	43.5	6.76	42.2	6.68	39.3	6.29
80%	-19.8	-20.0	38.8	15.35	38.7	15.84	38.6	15.93	38.6	16.21	37.2	16.00	34.1	15.11
	-18.8	-19.0	39.2	15.43	39.1	15.85	39.1	16.00	38.8	16.20	37.3	15.81	34.1	15.01
	-16.7	-17.0	40.0	15.48	40.0	15.93	39.9	16.01	38.9	15.85	37.3	15.47	34.2	14.65
	-13.7	-15.0	40.9	15.48	40.9	15.91	40.4	15.81	39.0	15.48	37.4	15.16	34.5	14.41
	-11.8	-13.0	41.8	15.51	41.8	15.85	40.4	15.44	39.0	15.12	37.4	14.74	35.0	13.92
	-9.8	-11.0	42.7	15.40	42.6	15.72	40.5	15.02	39.0	14.69	37.6	14.28	35.0	13.15
	-9.5	-10.0	43.1	15.33	43.1	15.69	40.5	14.78	39.0	14.46	37.6	13.87	35.0	12.77
	-8.5	-9.1	43.5	15.30	43.5	15.59	40.5	14.59	39.0	14.11	37.6	13.51	35.0	12.43
	-7.0	-7.6	44.0	15.16	43.5	15.25	40.4	14.00	39.0	13.44	37.6	12.91	35.0	11.94
	-5.0	-5.6	44.4	13.15	43.2	14.54	40.2	13.09	38.7	12.58	37.6	12.15	35.0	11.20
	-3.0	-3.7	45.2	12.95	43.2	13.69	40.2	12.33	38.7	11.91	37.6	11.46	35.0	10.58
	0.0	-0.7	46.3	13.49	43.2	12.43	40.2	11.24	38.7	10.82	37.6	10.45	35.0	9.66
	3.0	2.2	46.3	12.29	43.2	11.34	40.2	10.29	38.7	9.89	37.6	9.57	35.0	8.85
	5.0	4.1	46.3	11.57	43.2	10.69	40.2	9.71	38.7	9.34	37.6	9.05	35.0	8.38
	7.0	6.0	46.3	10.90	43.2	10.11	40.2	9.17	38.7	8.84	37.6	8.56	35.0	7.93
	9.0	7.9	46.3	10.29	43.2	9.52	40.2	8.72	38.7	8.35	37.6	8.09	35.0	7.51
	11.0	9.8	46.3	9.72	43.2	9.00	40.2	8.21	38.7	7.90	37.6	7.66	35.0	7.12
	13.0	11.8	46.3	9.16	43.2	8.49	40.2	7.77	38.7	7.48	37.6	7.25	35.0	6.74
	15.0	13.7	46.3	8.66	43.2	8.05	40.2	7.37	38.7	7.09	37.6	6.88	35.0	6.41
	18.0	16.8	46.3	8.27	43.2	7.66	40.2	7.02	38.7	6.74	37.6	6.52	35.0	6.12
	20.0	18.5	46.3	7.95	43.2	7.34	40.2	6.71	38.7	6.43	37.6	6.21	35.0	5.84
	24.0	20.5	46.3	7.71	43.2	7.10	40.2	6.43	38.7	6.16	37.6	5.93	35.0	5.59

TC—Total capacity of outdoor unit; PI—Power input of outdoor unit														
Connection ratio	Outdoor air temp.（℃）		Indoor air temp.（℃ DB）											
			16		18		20		21		22		24	
			TC	PI	TC	PI	TC	PI	TC	PI	TC	PI	TC	PI
	℃ DB	℃ WB	kW	kW	kW	kW	kW	kW	kW	kW	kW	kW	kW	kW
70%	-19.8	-20.0	38.6	16.36	37.9	16.52	35.2	15.38	34.0	15.07	32.6	14.70	30.6	14.05
	-18.8	-19.0	39.0	16.43	38.0	16.34	35.3	15.27	34.0	14.96	32.7	14.59	30.6	13.76
	-16.7	-17.0	39.9	16.40	38.0	15.98	35.3	14.91	34.1	14.61	32.7	14.20	30.6	13.13
	-13.7	-15.0	40.8	16.35	38.1	15.66	35.4	14.55	34.1	14.15	32.8	13.53	30.6	12.48
	-11.8	-13.0	40.8	15.97	38.1	15.20	35.4	13.89	34.1	13.42	32.8	12.83	30.6	11.84
	-9.8	-11.0	40.8	15.50	38.1	14.65	35.4	13.15	34.2	12.71	32.8	12.15	30.6	11.21
	-9.5	-10.0	40.8	15.26	38.2	14.22	35.5	12.78	34.2	12.35	32.8	11.82	30.6	10.90
	-8.5	-9.1	40.8	15.04	38.2	13.84	35.5	12.45	34.2	12.03	32.8	11.51	30.6	10.62
	-7.0	-7.6	40.8	14.33	38.1	13.20	35.4	11.89	34.1	11.50	32.8	11.00	30.6	10.18
	-5.0	-5.6	40.5	13.39	37.9	12.35	35.2	11.14	33.9	10.76	32.8	10.38	30.6	9.61
	-3.0	-3.7	40.5	12.61	37.9	11.64	35.2	10.53	33.9	10.17	32.8	9.81	30.6	9.08
	0.0	-0.7	40.5	11.47	37.9	10.66	35.2	9.62	33.9	9.30	32.8	8.98	30.6	8.33
	3.0	2.2	40.5	10.48	37.9	9.71	35.2	8.83	33.9	8.54	32.8	8.24	30.6	7.65
	5.0	4.1	40.5	9.89	37.9	9.16	35.2	8.36	33.9	8.08	32.8	7.81	30.6	7.24
	7.0	6.0	40.5	9.35	37.9	8.67	35.2	7.90	33.9	7.65	32.8	7.40	30.6	6.87
	9.0	7.9	40.5	8.84	37.9	8.20	35.2	7.49	33.9	7.25	32.8	7.01	30.6	6.52
	11.0	9.8	40.5	8.36	37.9	7.75	35.2	7.11	33.9	6.88	32.8	6.66	30.6	6.19
	13.0	11.8	40.5	7.90	37.9	7.34	35.2	6.72	33.9	6.53	32.8	6.30	30.6	5.88
	15.0	13.7	40.5	7.49	37.9	6.97	35.2	6.39	33.9	6.20	32.8	5.99	30.6	5.60
	18.0	16.8	40.5	7.10	37.9	6.62	35.2	6.08	33.9	5.91	32.8	5.72	30.6	5.35
	20.0	18.5	40.5	6.77	37.9	6.30	35.2	5.80	33.9	5.65	32.8	5.47	30.6	5.14
	24.0	20.5	40.5	6.46	37.9	6.02	35.2	5.57	33.9	5.42	32.8	5.27	30.6	4.95
60%	-19.8	-20.0	34.8	15.73	32.5	15.04	30.2	13.63	29.1	13.08	28.2	12.65	26.3	11.66
	-18.8	-19.0	34.8	15.61	32.6	14.85	30.3	13.36	29.1	12.82	28.2	12.37	26.3	11.41
	-16.7	-17.0	34.9	15.22	32.6	14.25	30.3	12.78	29.1	12.26	28.2	11.83	26.3	10.92
	-13.7	-15.0	34.9	14.73	32.7	13.56	30.4	12.18	29.2	11.69	28.2	11.26	26.3	10.40
	-11.8	-13.0	34.9	13.94	32.7	12.85	30.4	11.56	29.2	11.10	28.2	10.70	26.3	9.89
	-9.8	-11.0	35.0	13.19	32.7	12.17	30.4	10.97	29.2	10.53	28.2	10.13	26.3	9.39
	-9.5	-10.0	35.0	12.83	32.7	11.84	30.4	10.68	29.3	10.26	28.2	9.86	26.3	9.12
	-8.5	-9.1	35.0	12.49	32.7	11.53	30.4	10.42	29.3	10.00	28.2	9.61	26.3	8.91
	-7.0	-7.6	34.9	11.92	32.7	11.02	30.4	9.96	29.2	9.57	28.2	9.22	26.3	8.55
	-5.0	-5.6	34.7	11.16	32.5	10.32	30.2	9.35	29.0	8.98	28.2	8.71	26.3	8.09
	-3.0	-3.7	34.7	10.54	32.5	9.75	30.2	8.88	29.0	8.51	28.2	8.25	26.3	7.66
	0.0	-0.7	34.7	9.63	32.5	8.93	30.2	8.12	29.0	7.82	28.2	7.58	26.3	7.04
	3.0	2.2	34.7	8.83	32.5	8.20	30.2	7.48	29.0	7.19	28.2	6.99	26.3	6.50
	5.0	4.1	34.7	8.35	32.5	7.76	30.2	7.09	29.0	6.83	28.2	6.62	26.3	6.18
	7.0	6.0	34.7	7.90	32.5	7.35	30.2	6.72	29.0	6.47	28.2	6.30	26.3	5.87
	9.0	7.9	34.7	7.49	32.5	6.97	30.2	6.38	29.0	6.15	28.2	5.98	26.3	5.59
	11.0	9.8	34.7	7.10	32.5	6.62	30.2	6.08	29.0	5.85	28.2	5.68	26.3	5.32
	13.0	11.8	34.7	6.72	32.5	6.27	30.2	5.77	29.0	5.56	28.2	5.41	26.3	5.06
	15.0	13.7	34.7	6.40	32.5	5.95	30.2	5.49	29.0	5.30	28.2	5.16	26.3	4.83
	18.0	16.8	34.7	6.11	32.5	5.67	30.2	5.25	29.0	5.07	28.2	4.94	26.3	4.63
	20.0	18.5	34.7	5.85	32.5	5.42	30.2	5.03	29.0	4.87	28.2	4.76	26.3	4.45
	24.0	20.5	34.7	5.63	32.5	5.19	30.2	4.85	29.0	4.70	28.2	4.60	26.3	4.30

GMV X DC Inverter VRF Units

TC—Total capacity of outdoor unit; PI—Power input of outdoor unit														
Connection ratio	Outdoor air temp.（℃）		Indoor air temp.（℃ DB）											
			16		18		20		21		22		24	
			TC	PI	TC	PI	TC	PI	TC	PI	TC	PI	TC	PI
	℃ DB	℃ WB	kW	kW	kW	kW	kW	kW	kW	kW	kW	kW	kW	kW
50%	-19.8	-20.0	29.0	13.19	27.1	12.16	25.2	10.92	24.3	10.57	23.4	10.17	21.8	9.44
	-18.8	-19.0	29.0	12.92	27.1	11.92	25.3	10.73	24.3	10.36	23.4	9.97	21.8	9.26
	-16.7	-17.0	29.1	12.34	27.2	11.39	25.3	10.27	24.3	9.93	23.4	9.57	21.8	8.87
	-13.7	-15.0	29.1	11.77	27.2	10.88	25.3	9.81	24.4	9.49	23.5	9.14	21.8	8.47
	-11.8	-13.0	29.1	11.18	27.2	10.35	25.3	9.34	24.4	9.04	23.5	8.70	21.8	8.07
	-9.8	-11.0	29.2	10.60	27.3	9.81	25.4	8.89	24.4	8.59	23.5	8.28	21.8	7.67
	-9.5	-10.0	29.2	10.32	27.3	9.55	25.4	8.66	24.4	8.38	23.5	8.07	21.8	7.47
	-8.5	-9.1	29.2	10.06	27.3	9.33	25.4	8.45	24.4	8.18	23.5	7.89	21.8	7.30
	-7.0	-7.6	29.1	9.62	27.2	8.96	25.3	8.10	24.4	7.85	23.5	7.57	21.8	7.02
	-5.0	-5.6	28.9	9.02	27.1	8.38	25.2	7.63	24.2	7.39	23.4	7.15	21.8	6.65
	-3.0	-3.7	28.9	8.55	27.1	7.94	25.2	7.23	24.2	7.01	23.4	6.79	21.8	6.33
	0.0	-0.7	28.9	7.85	27.1	7.30	25.2	6.67	24.2	6.46	23.4	6.26	21.8	5.85
	3.0	2.2	28.9	7.22	27.1	6.73	25.2	6.16	24.2	5.97	23.4	5.80	21.8	5.42
	5.0	4.1	28.9	6.86	27.1	6.38	25.2	5.85	24.2	5.68	23.4	5.51	21.8	5.15
	7.0	6.0	28.9	6.51	27.1	6.06	25.2	5.58	24.2	5.40	23.4	5.25	21.8	4.92
	9.0	7.9	28.9	6.17	27.1	5.76	25.2	5.30	24.2	5.16	23.4	5.00	21.8	4.69
	11.0	9.8	28.9	5.87	27.1	5.48	25.2	5.06	24.2	4.91	23.4	4.77	21.8	4.47
	13.0	11.8	28.9	5.58	27.1	5.21	25.2	4.81	24.2	4.68	23.4	4.54	21.8	4.27
	15.0	13.7	28.9	5.31	27.1	4.98	25.2	4.60	24.2	4.47	23.4	4.34	21.8	4.07
	18.0	16.8	28.9	5.06	27.1	4.75	25.2	4.41	24.2	4.28	23.4	4.15	21.8	3.88
	20.0	18.5	28.9	4.82	27.1	4.55	25.2	4.24	24.2	4.13	23.4	3.98	21.8	3.71
	24.0	20.5	28.9	4.59	27.1	4.36	25.2	3.95	24.2	3.99	23.4	3.83	21.8	3.55

GMV-504WM/B-X(P)

TC—Total capacity of outdoor unit; PI—Power input of outdoor unit														
Connection ratio	Outdoor air temp.（℃）		Indoor air temp.（℃ DB）											
			16		18		20		21		22		24	
			TC	PI	TC	PI	TC	PI	TC	PI	TC	PI	TC	PI
	℃ DB	℃ WB	kW	kW	kW	kW	kW	kW	kW	kW	kW	kW	kW	kW
135%	-19.8	-20.0	46.6	12.61	45.5	13.25	44.6	13.71	44.1	14.02	43.8	14.43	42.9	15.03
	-18.8	-19.0	47.0	12.83	46.0	13.46	45.0	13.82	44.6	14.19	44.2	14.51	43.3	15.15
	-16.7	-17.0	47.8	13.13	46.8	13.73	45.9	14.11	45.4	14.33	45.1	14.70	44.2	15.31
	-13.7	-15.0	48.7	13.44	47.6	13.96	46.8	14.31	46.3	14.56	46.0	14.93	45.1	15.42
	-11.8	-13.0	49.4	13.69	48.4	14.14	47.6	14.42	47.1	14.73	46.8	15.01	46.0	15.54
	-9.8	-11.0	50.3	13.90	49.3	14.34	48.5	14.59	48.0	14.81	47.7	15.06	46.9	15.55
	-9.5	-10.0	50.7	13.96	49.7	14.38	48.9	14.60	48.4	14.81	48.1	15.10	47.3	15.50
	-8.5	-9.1	51.1	14.04	50.2	14.46	49.3	14.58	48.9	14.86	48.6	15.09	47.8	15.55
	-7.0	-7.6	51.7	14.12	50.9	14.47	50.0	14.63	49.5	14.82	49.2	15.08	48.4	15.50
	-5.0	-5.6	56.2	15.12	55.3	15.20	54.6	15.69	54.2	15.91	53.8	16.16	53.2	16.56
	-3.0	-3.7	56.9	15.10	56.1	15.48	55.4	15.56	55.0	15.83	54.7	16.02	54.0	16.41
	0.0	-0.7	58.3	15.04	57.4	15.28	56.7	15.37	56.4	15.56	56.1	15.79	56.1	16.26
	3.0	2.2	69.0	17.18	68.4	17.54	67.7	17.67	67.5	17.87	67.3	18.10	63.4	17.59
	5.0	4.1	85.0	20.65	79.3	19.83	73.8	18.66	71.0	18.26	68.2	17.81	63.4	17.03
	7.0	6.0	85.1	20.13	79.4	19.28	73.9	18.14	71.0	15.82	68.3	17.26	64.1	16.27
	9.0	7.9	85.1	19.58	79.5	18.73	73.9	17.59	71.1	17.18	68.8	16.66	64.1	15.29
	11.0	9.8	85.1	19.01	79.5	18.14	73.9	16.99	71.1	16.28	68.8	15.66	64.1	14.41
	13.0	11.8	85.1	18.38	79.5	17.53	73.9	15.93	71.1	15.26	68.8	14.70	64.1	13.52
	15.0	13.7	85.1	17.84	79.5	16.53	73.9	15.01	71.1	14.40	68.8	13.86	64.1	12.76
	18.0	16.8	85.1	16.89	79.5	15.73	73.9	14.24	71.1	13.68	68.8	13.10	64.1	12.13
	20.0	18.5	85.1	16.08	79.5	15.03	73.9	13.59	71.1	13.07	68.8	12.45	64.1	11.58
	24.0	20.5	85.1	15.38	79.5	14.46	73.9	13.07	71.1	12.57	68.8	11.89	64.1	11.17
120%	-19.8	-20.0	45.4	13.54	44.5	14.10	43.7	14.49	43.4	14.78	43.0	15.09	42.2	15.71
	-18.8	-19.0	45.9	13.72	44.9	14.28	44.2	14.42	43.8	14.93	43.4	15.24	42.7	15.83
	-16.7	-17.0	46.6	13.96	45.8	14.50	45.0	14.74	44.7	15.09	44.3	15.37	43.5	15.91
	-13.7	-15.0	47.5	14.19	46.7	14.68	45.9	14.95	45.6	15.22	45.2	15.48	44.5	16.02
	-11.8	-13.0	48.3	14.40	47.5	14.79	46.7	15.02	46.4	15.27	46.0	15.56	45.3	16.00
	-9.8	-11.0	49.2	14.54	48.4	14.93	47.6	15.07	47.3	15.35	47.0	15.59	46.3	16.09
	-9.5	-10.0	49.6	14.57	48.8	14.95	48.0	15.10	47.7	15.33	47.4	15.44	46.7	16.01
	-8.5	-9.1	50.0	14.62	49.3	15.00	48.5	15.09	48.2	15.35	47.9	15.60	47.2	16.03
	-7.0	-7.6	50.7	14.66	49.9	14.96	49.1	15.08	48.8	15.27	48.5	15.54	47.9	15.87
	-5.0	-5.6	55.2	15.66	54.5	16.02	53.8	16.17	53.5	16.39	53.2	16.58	52.6	17.00
	-3.0	-3.7	56.0	15.63	55.3	15.90	54.6	16.00	54.4	16.20	54.1	16.47	53.4	16.76
	0.0	-0.7	57.3	15.46	56.7	15.70	56.0	15.95	56.1	16.02	55.9	16.27	55.9	16.73
	3.0	2.2	68.3	17.68	67.7	18.01	67.2	18.06	66.4	18.18	60.4	16.74	59.1	16.70
	5.0	4.1	78.4	19.76	73.3	18.93	68.1	17.77	65.6	17.39	63.4	17.03	59.1	15.69
	7.0	6.0	78.5	19.21	73.4	18.33	68.2	17.23	65.7	16.67	63.6	16.05	59.1	14.76
	9.0	7.9	78.6	18.67	73.4	17.83	68.3	16.39	65.7	15.68	63.6	15.09	59.1	13.90
	11.0	9.8	78.6	18.07	73.4	17.00	68.3	15.42	65.7	14.77	63.6	14.21	59.1	13.10
	13.0	11.8	78.6	17.27	73.4	15.95	68.3	14.47	65.7	13.87	63.6	13.36	59.1	12.32
	15.0	13.7	78.6	16.26	73.4	15.02	68.3	13.66	65.7	13.08	63.6	12.61	59.1	11.63
	18.0	16.8	78.6	15.36	73.4	14.22	68.3	12.98	65.7	12.40	63.6	11.94	59.1	11.04
	20.0	18.5	78.6	14.56	73.4	13.58	68.3	12.42	65.7	11.82	63.6	11.38	59.1	10.51
	24.0	20.5	78.6	13.85	73.4	13.02	68.3	11.97	65.7	11.34	63.6	10.93	59.1	10.08

GMV X DC Inverter VRF Units

TC—Total capacity of outdoor unit; PI—Power input of outdoor unit														
Connection ratio	Outdoor air temp.（℃）		Indoor air temp.（℃ DB）											
			16		18		20		21		22		24	
			TC	PI	TC	PI	TC	PI	TC	PI	TC	PI	TC	PI
	℃ DB	℃ WB	kW	kW	kW	kW	kW	kW	kW	kW	kW	kW	kW	kW
110%	-19.8	-20.0	44.3	14.42	43.5	14.94	42.9	15.24	42.5	15.50	42.2	15.80	41.6	16.38
	-18.8	-19.0	44.7	14.57	44.0	15.02	43.3	15.29	43.0	15.59	42.7	15.92	42.1	16.44
	-16.7	-17.0	45.6	14.77	44.8	15.25	44.2	15.42	43.9	15.77	43.5	16.02	43.0	16.56
	-13.7	-15.0	46.5	14.94	45.8	15.42	45.0	15.57	44.8	15.84	44.5	16.11	44.0	16.61
	-11.8	-13.0	47.3	15.10	46.6	15.46	46.0	15.62	45.6	15.83	45.3	16.14	44.8	16.56
	-9.8	-11.0	48.2	15.16	47.5	15.55	46.9	15.61	46.6	15.91	46.3	16.13	45.8	16.50
	-9.5	-10.0	48.6	15.15	47.9	15.51	47.3	15.64	47.0	15.85	46.7	16.07	46.2	16.48
	-8.5	-9.1	49.1	15.20	48.4	15.56	47.8	15.60	47.5	15.81	47.2	16.09	46.7	16.41
	-7.0	-7.6	49.7	15.21	49.0	15.46	48.4	15.54	48.1	15.74	47.9	15.75	47.3	16.31
	-5.0	-5.6	54.2	16.20	53.7	16.57	53.1	16.66	52.9	16.86	52.6	16.30	52.2	17.49
	-3.0	-3.7	55.1	16.11	54.5	16.37	53.9	16.45	53.7	16.63	55.9	16.28	53.0	17.20
	0.0	-0.7	56.5	15.88	56.1	16.14	55.9	16.30	55.9	16.52	58.2	16.77	54.3	16.49
	3.0	2.2	67.5	18.17	67.1	18.48	63.4	17.59	61.0	17.19	58.6	16.43	54.3	15.01
	5.0	4.1	72.0	18.79	67.2	17.91	62.6	16.63	60.2	15.95	58.2	15.35	54.3	14.13
	7.0	6.0	72.1	18.23	67.3	17.27	62.6	15.64	60.3	15.02	58.2	14.44	54.3	13.30
	9.0	7.9	72.1	17.64	67.4	16.25	62.7	14.75	60.3	14.15	58.2	13.59	54.3	12.54
	11.0	9.8	72.1	16.59	67.4	15.29	62.7	13.88	60.3	13.35	58.2	12.82	54.3	11.83
	13.0	11.8	72.1	15.57	67.4	14.34	62.7	13.06	60.3	12.56	58.2	12.06	54.3	11.14
	15.0	13.7	72.1	14.67	67.4	13.53	62.7	12.34	60.3	11.85	58.2	11.41	54.3	10.55
	18.0	16.8	72.1	13.88	67.4	12.83	62.7	11.26	60.3	11.24	58.2	10.87	54.3	10.04
	20.0	18.5	72.1	13.17	67.4	12.20	62.7	10.68	60.3	10.70	58.2	10.42	54.3	9.60
	24.0	20.5	72.1	12.57	67.4	11.64	62.7	10.18	60.3	10.25	58.2	10.04	54.3	9.24
100%	-19.8	-20.0	43.2	15.27	42.5	15.71	41.9	15.84	41.6	16.19	41.3	16.41	40.7	16.95
	-18.8	-19.0	43.6	15.39	42.9	15.76	42.3	15.94	42.1	16.21	41.7	16.51	41.2	16.98
	-16.7	-17.0	44.5	15.52	43.8	15.94	43.2	16.01	42.9	16.26	42.6	16.55	42.0	16.96
	-13.7	-15.0	45.4	15.63	44.8	16.04	44.2	16.10	43.9	16.41	43.4	16.53	42.9	17.03
	-11.8	-13.0	46.2	15.73	45.6	16.02	45.0	16.12	44.7	16.34	44.3	15.92	43.7	16.92
	-9.8	-11.0	47.1	15.72	46.4	16.06	45.9	16.09	45.7	16.30	45.1	16.43	44.6	16.77
	-9.5	-10.0	47.5	15.69	46.9	16.01	46.4	16.03	46.1	16.28	45.5	16.34	45.0	16.75
	-8.5	-9.1	47.9	15.68	47.3	15.93	46.8	16.00	46.5	16.19	45.9	16.31	45.4	16.62
	-7.0	-7.6	48.4	15.60	47.9	15.86	47.3	15.87	47.0	16.06	46.6	16.16	46.6	16.68
	-5.0	-5.6	52.7	16.54	52.1	16.81	51.6	16.80	51.5	17.08	51.2	17.24	49.1	16.97
	-3.0	-3.7	53.5	16.39	52.9	16.57	52.4	16.61	52.3	16.80	52.1	16.98	49.4	16.16
	0.0	-0.7	55.9	16.38	55.9	16.70	55.7	16.81	54.8	16.59	53.0	15.95	49.4	14.70
	3.0	2.2	65.2	18.18	60.8	17.31	56.5	15.63	54.8	15.09	53.0	14.54	49.4	13.38
	5.0	4.1	65.2	17.63	60.8	16.27	56.5	14.71	54.8	14.22	53.0	13.69	49.4	12.62
	7.0	6.0	65.2	16.63	60.8	15.29	56.5	13.55	54.8	13.39	53.0	12.90	49.4	11.90
	9.0	7.9	65.2	15.63	60.8	14.39	56.5	12.97	54.8	12.62	53.0	12.16	49.4	11.23
	11.0	9.8	65.2	14.71	60.8	13.56	56.5	12.25	54.8	11.91	53.0	11.48	49.4	10.62
	13.0	11.8	65.2	13.82	60.8	12.75	56.5	11.54	54.8	11.22	53.0	10.83	49.4	10.02
	15.0	13.7	65.2	13.04	60.8	12.03	56.5	10.91	54.8	10.61	53.0	10.24	49.4	9.49
	18.0	16.8	65.2	12.29	60.8	11.48	56.5	10.55	54.8	10.07	53.0	9.69	49.4	9.04
	20.0	18.5	65.2	11.60	60.8	11.02	56.5	10.13	54.8	9.62	53.0	9.24	49.4	8.68
	24.0	20.5	65.2	10.97	60.8	10.65	56.5	9.74	54.8	9.26	53.0	8.88	49.4	8.41

TC—Total capacity of outdoor unit; PI—Power input of outdoor unit														
Connection ratio	Outdoor air temp.（℃）		Indoor air temp.（℃ DB）											
			16		18		20		21		22		24	
			TC	PI	TC	PI	TC	PI	TC	PI	TC	PI	TC	PI
	℃ DB	℃ WB	kW	kW	kW	kW	kW	kW	kW	kW	kW	kW	kW	kW
90%	-19.8	-20.0	42.2	16.12	41.7	16.53	41.2	16.59	41.1	16.96	40.8	17.20	40.4	17.62
	-18.8	-19.0	42.7	16.21	42.2	16.60	41.6	16.69	41.5	16.97	41.4	17.24	40.8	17.69
	-16.7	-17.0	43.5	16.31	43.1	16.73	42.6	16.74	42.4	16.98	42.2	17.31	41.8	17.69
	-13.7	-15.0	44.5	16.39	43.9	16.74	43.5	16.74	43.4	16.91	43.2	17.31	42.7	17.63
	-11.8	-13.0	45.3	16.41	44.9	16.69	44.4	16.75	44.3	17.00	44.0	17.17	43.5	17.54
	-9.8	-11.0	46.2	16.33	45.7	16.59	45.4	16.66	45.2	16.86	45.0	17.07	43.5	17.05
	-9.5	-10.0	46.7	16.31	46.3	16.63	45.8	16.57	45.7	16.86	45.4	17.03	43.9	16.89
	-8.5	-9.1	47.0	16.26	46.6	16.49	46.2	16.54	46.0	16.70	45.8	16.91	44.4	16.80
	-7.0	-7.6	47.6	16.16	47.2	16.37	46.7	16.38	46.6	16.58	46.5	16.76	44.4	16.04
	-5.0	-5.6	52.0	17.09	51.5	17.36	51.1	17.29	49.1	16.88	47.6	16.39	44.4	15.09
	-3.0	-3.7	52.8	16.89	52.3	15.22	51.1	16.65	49.1	16.00	47.6	15.44	44.4	14.22
	0.0	-0.7	55.9	16.98	54.3	14.74	51.1	15.13	49.1	14.55	47.6	14.04	44.4	12.94
	3.0	2.2	58.8	16.53	54.9	15.24	51.1	13.80	49.1	13.28	47.6	12.82	44.4	11.84
	5.0	4.1	58.8	15.55	54.9	14.34	51.1	13.02	49.1	12.52	47.6	12.10	44.4	11.17
	7.0	6.0	58.8	14.62	54.9	13.51	51.1	12.27	49.1	11.82	47.6	11.42	44.4	10.56
	9.0	7.9	58.8	13.78	54.9	12.72	51.1	11.57	49.1	11.16	47.6	10.79	44.4	9.98
	11.0	9.8	58.8	12.98	54.9	12.00	51.1	10.95	49.1	10.55	47.6	10.20	44.4	9.46
	13.0	11.8	58.8	12.21	54.9	11.31	51.1	10.32	49.1	9.96	47.6	9.64	44.4	8.93
	15.0	13.7	58.8	11.54	54.9	10.69	51.1	9.78	49.1	9.40	47.6	9.13	44.4	8.48
	18.0	16.8	58.8	10.91	54.9	10.10	51.1	9.28	49.1	8.88	47.6	8.66	44.4	8.06
	20.0	18.5	58.8	10.31	54.9	9.54	51.1	8.82	49.1	8.38	47.6	8.23	44.4	7.70
	24.0	20.5	58.8	9.73	54.9	9.01	51.1	8.37	49.1	7.91	47.6	7.81	44.4	7.35
80%	-19.8	-20.0	41.4	16.96	40.9	17.33	40.5	17.32	40.4	17.58	40.3	17.92	38.5	17.68
	-18.8	-19.0	41.8	17.04	41.4	17.38	41.1	17.44	41.0	17.70	40.8	17.93	38.6	17.57
	-16.7	-17.0	42.8	17.11	42.3	17.45	41.9	17.42	41.8	17.66	41.7	17.88	38.6	17.14
	-13.7	-15.0	43.6	17.09	43.3	17.45	42.9	17.40	42.8	17.62	42.2	17.75	39.0	16.86
	-11.8	-13.0	44.6	17.10	44.1	17.33	43.7	17.32	43.7	17.57	42.2	17.25	39.6	16.29
	-9.8	-11.0	45.4	16.96	45.1	17.20	44.7	17.20	44.1	17.19	42.4	16.71	39.6	15.39
	-9.5	-10.0	45.9	16.87	45.5	17.16	45.1	17.07	44.1	16.92	42.4	16.23	39.6	14.94
	-8.5	-9.1	46.3	16.83	45.9	17.05	45.5	17.01	44.1	16.51	42.4	15.80	39.6	14.54
	-7.0	-7.6	46.9	16.70	46.5	16.89	45.7	16.39	44.0	15.73	42.4	15.10	39.6	13.97
	-5.0	-5.6	51.2	15.71	48.8	17.01	45.4	15.32	43.8	14.72	42.4	14.21	39.6	13.10
	-3.0	-3.7	52.1	15.46	48.8	16.02	45.4	14.44	43.8	13.94	42.4	13.40	39.6	12.38
	0.0	-0.7	52.3	15.78	48.8	14.54	45.4	13.16	43.8	12.66	42.4	12.22	39.6	11.30
	3.0	2.2	52.3	14.38	48.8	13.26	45.4	12.04	43.8	11.57	42.4	11.20	39.6	10.36
	5.0	4.1	52.3	13.54	48.8	12.51	45.4	11.36	43.8	10.93	42.4	10.59	39.6	9.80
	7.0	6.0	52.3	12.75	48.8	11.82	45.4	10.74	43.8	10.34	42.4	10.01	39.6	9.27
	9.0	7.9	52.3	12.04	48.8	11.14	45.4	10.20	43.8	9.77	42.4	9.47	39.6	8.78
	11.0	9.8	52.3	11.37	48.8	10.53	45.4	9.61	43.8	9.25	42.4	8.96	39.6	8.33
	13.0	11.8	52.3	10.72	48.8	9.94	45.4	9.09	43.8	8.75	42.4	8.48	39.6	7.88
	15.0	13.7	52.3	10.14	48.8	9.42	45.4	8.62	43.8	8.30	42.4	8.04	39.6	7.50
	18.0	16.8	52.3	9.67	48.8	8.96	45.4	8.21	43.8	7.89	42.4	7.63	39.6	7.15
	20.0	18.5	52.3	9.29	48.8	8.59	45.4	7.85	43.8	7.53	42.4	7.27	39.6	6.83
	24.0	20.5	52.3	9.01	48.8	8.31	45.4	7.53	43.8	7.20	42.4	6.94	39.6	6.54

GMV X DC Inverter VRF Units

TC—Total capacity of outdoor unit; PI—Power input of outdoor unit														
Connection ratio	Outdoor air temp.（℃）		Indoor air temp.（℃ DB）											
			16		18		20		21		22		24	
			TC	PI	TC	PI	TC	PI	TC	PI	TC	PI	TC	PI
	℃ DB	℃ WB	kW	kW	kW	kW	kW	kW	kW	kW	kW	kW	kW	kW
70%	-19.8	-20.0	40.6	17.81	40.2	18.15	39.9	18.03	38.3	17.60	36.9	17.21	34.5	16.43
	-18.8	-19.0	41.0	17.89	40.8	18.17	39.9	17.90	38.4	17.47	36.9	17.08	34.5	16.09
	-16.7	-17.0	42.0	17.88	41.6	18.13	40.0	17.48	38.4	17.06	36.9	16.62	34.5	15.36
	-13.7	-15.0	42.9	17.81	42.6	18.15	40.0	17.06	38.5	16.53	37.0	15.84	34.5	14.60
	-11.8	-13.0	43.8	17.76	43.0	17.79	40.0	16.28	38.5	15.67	37.0	15.02	34.5	13.85
	-9.8	-11.0	44.8	17.60	43.1	17.13	40.1	15.42	38.6	14.84	37.1	14.22	34.5	13.11
	-9.5	-10.0	45.2	17.48	43.1	16.64	40.1	14.98	38.6	14.42	37.1	13.83	34.5	12.75
	-8.5	-9.1	45.6	17.38	43.1	16.19	40.1	14.59	38.6	14.05	37.1	13.47	34.5	12.43
	-7.0	-7.6	46.0	16.75	43.0	15.44	40.0	13.94	38.5	13.43	37.0	12.88	34.5	11.90
	-5.0	-5.6	45.7	15.64	42.8	14.44	39.8	13.06	38.3	12.57	37.1	12.14	34.5	11.24
	-3.0	-3.7	45.7	14.73	42.8	13.61	39.8	12.34	38.3	11.88	37.1	11.48	34.5	10.62
	0.0	-0.7	45.7	13.41	42.8	12.47	39.8	11.27	38.3	10.86	37.1	10.51	34.5	9.74
	3.0	2.2	45.7	12.25	42.8	11.36	39.8	10.35	38.3	9.97	37.1	9.64	34.5	8.94
	5.0	4.1	45.7	11.56	42.8	10.71	39.8	9.79	38.3	9.43	37.1	9.14	34.5	8.47
	7.0	6.0	45.7	10.93	42.8	10.14	39.8	9.26	38.3	8.93	37.1	8.65	34.5	8.04
	9.0	7.9	45.7	10.33	42.8	9.59	39.8	8.77	38.3	8.46	37.1	8.20	34.5	7.62
	11.0	9.8	45.7	9.77	42.8	9.07	39.8	8.33	38.3	8.03	37.1	7.79	34.5	7.24
	13.0	11.8	45.7	9.23	42.8	8.59	39.8	7.88	38.3	7.62	37.1	7.37	34.5	6.88
	15.0	13.7	45.7	8.75	42.8	8.15	39.8	7.48	38.3	7.24	37.1	7.01	34.5	6.55
	18.0	16.8	45.7	8.30	42.8	7.74	39.8	7.12	38.3	6.90	37.1	6.69	34.5	6.26
	20.0	18.5	45.7	7.91	42.8	7.37	39.8	6.80	38.3	6.60	37.1	6.40	34.5	6.01
	24.0	20.5	45.7	7.55	42.8	7.04	39.8	6.53	38.3	6.33	37.1	6.16	34.5	5.79
60%	-19.8	-20.0	39.3	18.40	36.8	17.59	34.2	15.96	32.9	15.33	31.8	14.80	29.7	13.64
	-18.8	-19.0	39.4	18.26	36.8	17.37	34.2	15.65	33.0	15.03	31.8	14.48	29.7	13.35
	-16.7	-17.0	39.4	17.81	36.8	16.67	34.2	14.96	33.0	14.38	31.8	13.84	29.7	12.78
	-13.7	-15.0	39.5	17.24	36.9	15.87	34.3	14.26	33.1	13.71	31.8	13.18	29.7	12.17
	-11.8	-13.0	39.5	16.31	36.9	15.03	34.3	13.54	33.1	13.02	31.8	12.52	29.7	11.57
	-9.8	-11.0	39.5	15.44	37.0	14.23	34.4	12.85	33.1	12.35	31.8	11.86	29.7	10.98
	-9.5	-10.0	39.6	15.01	37.0	13.85	34.4	12.50	33.1	12.03	31.8	11.53	29.7	10.67
	-8.5	-9.1	39.6	14.61	37.0	13.49	34.4	12.19	33.1	11.73	31.8	11.25	29.7	10.42
	-7.0	-7.6	39.5	13.95	36.9	12.89	34.3	11.65	33.1	11.22	31.8	10.78	29.7	10.01
	-5.0	-5.6	39.3	13.06	36.7	12.07	34.1	10.95	32.9	10.53	31.8	10.19	29.7	9.46
	-3.0	-3.7	39.3	12.33	36.7	11.41	34.1	10.40	32.9	9.98	31.8	9.65	29.7	8.96
	0.0	-0.7	39.3	11.26	36.7	10.45	34.1	9.51	32.9	9.16	31.8	8.86	29.7	8.24
	3.0	2.2	39.3	10.33	36.7	9.60	34.1	8.76	32.9	8.43	31.8	8.18	29.7	7.61
	5.0	4.1	39.3	9.77	36.7	9.08	34.1	8.29	32.9	8.00	31.8	7.75	29.7	7.22
	7.0	6.0	39.3	9.24	36.7	8.60	34.1	7.86	32.9	7.59	31.8	7.37	29.7	6.86
	9.0	7.9	39.3	8.76	36.7	8.15	34.1	7.47	32.9	7.21	31.8	6.99	29.7	6.53
	11.0	9.8	39.3	8.31	36.7	7.74	34.1	7.11	32.9	6.86	31.8	6.65	29.7	6.23
	13.0	11.8	39.3	7.86	36.7	7.34	34.1	6.75	32.9	6.51	31.8	6.32	29.7	5.92
	15.0	13.7	39.3	7.49	36.7	6.97	34.1	6.43	32.9	6.21	31.8	6.03	29.7	5.65
	18.0	16.8	39.3	7.15	36.7	6.63	34.1	6.14	32.9	5.94	31.8	5.78	29.7	5.41
	20.0	18.5	39.3	6.85	36.7	6.34	34.1	5.89	32.9	5.71	31.8	5.56	29.7	5.21
	24.0	20.5	39.3	6.59	36.7	6.08	34.1	5.67	32.9	5.51	31.8	5.38	29.7	5.03

TC—Total capacity of outdoor unit; PI—Power input of outdoor unit														
Connection ratio	Outdoor air temp.（℃）		Indoor air temp.（℃ DB）											
			16		18		20		21		22		24	
			TC	PI	TC	PI	TC	PI	TC	PI	TC	PI	TC	PI
	℃ DB	℃ WB	kW	kW	kW	kW	kW	kW	kW	kW	kW	kW	kW	kW
50%	-19.8	-20.0	32.8	15.46	30.6	14.23	28.6	12.81	27.5	12.41	26.4	11.90	24.7	11.04
	-18.8	-19.0	32.9	15.14	30.7	13.95	28.6	12.58	27.5	12.16	26.4	11.66	24.7	10.83
	-16.7	-17.0	32.9	14.46	30.7	13.33	28.6	12.05	27.6	11.66	26.5	11.19	24.7	10.38
	-13.7	-15.0	33.0	13.79	30.8	12.73	28.7	11.50	27.6	11.15	26.5	10.70	24.7	9.91
	-11.8	-13.0	33.0	13.10	30.8	12.11	28.7	10.96	27.6	10.61	26.5	10.18	24.7	9.44
	-9.8	-11.0	33.0	12.42	30.8	11.48	28.7	10.42	27.6	10.09	26.6	9.69	24.7	8.97
	-9.5	-10.0	33.0	12.09	30.8	11.17	28.7	10.16	27.7	9.84	26.6	9.45	24.7	8.74
	-8.5	-9.1	33.0	11.79	30.8	10.91	28.7	9.91	27.7	9.61	26.6	9.23	24.7	8.54
	-7.0	-7.6	33.0	11.28	30.8	10.48	28.7	9.50	27.6	9.21	26.5	8.85	24.7	8.21
	-5.0	-5.6	32.8	10.58	30.6	9.81	28.5	8.94	27.4	8.67	26.5	8.37	24.7	7.78
	-3.0	-3.7	32.8	10.02	30.6	9.29	28.5	8.48	27.4	8.23	26.5	7.94	24.7	7.40
	0.0	-0.7	32.8	9.19	30.6	8.54	28.5	7.82	27.4	7.58	26.5	7.33	24.7	6.84
	3.0	2.2	32.8	8.47	30.6	7.87	28.5	7.22	27.4	7.01	26.5	6.79	24.7	6.33
	5.0	4.1	32.8	8.04	30.6	7.46	28.5	6.86	27.4	6.67	26.5	6.45	24.7	6.03
	7.0	6.0	32.8	7.62	30.6	7.10	28.5	6.54	27.4	6.34	26.5	6.14	24.7	5.75
	9.0	7.9	32.8	7.23	30.6	6.74	28.5	6.22	27.4	6.05	26.5	5.85	24.7	5.48
	11.0	9.8	32.8	6.88	30.6	6.41	28.5	5.93	27.4	5.77	26.5	5.58	24.7	5.23
	13.0	11.8	32.8	6.54	30.6	6.10	28.5	5.64	27.4	5.49	26.5	5.31	24.7	4.99
	15.0	13.7	32.8	6.22	30.6	5.82	28.5	5.39	27.4	5.24	26.5	5.07	24.7	4.76
	18.0	16.8	32.8	5.92	30.6	5.56	28.5	5.17	27.4	5.02	26.5	4.86	24.7	4.54
	20.0	18.5	32.8	5.64	30.6	5.32	28.5	4.98	27.4	4.84	26.5	4.66	24.7	4.34
	24.0	20.5	32.8	5.38	30.6	5.10	28.5	4.63	27.4	4.68	26.5	4.48	24.7	4.16

GMV-560WM/B-X(P)

TC—Total capacity of outdoor unit; PI—Power input of outdoor unit														
Connection ratio	Outdoor air temp. (℃)		Indoor air temp. (℃ DB)											
			16		18		20		21		22		24	
			TC	PI	TC	PI	TC	PI	TC	PI	TC	PI	TC	PI
	℃ DB	℃ WB	kW	kW	kW	kW	kW	kW	kW	kW	kW	kW	kW	kW
135%	-19.8	-20.0	48.3	13.68	48.1	14.66	48.0	15.43	47.9	15.93	47.9	16.51	47.7	17.49
	-18.8	-19.0	48.7	13.91	48.6	14.88	48.4	15.54	48.4	16.11	48.3	16.59	48.3	17.65
	-16.7	-17.0	49.6	14.26	49.5	15.19	49.4	15.88	49.3	16.28	49.3	16.82	49.1	17.80
	-13.7	-15.0	50.6	14.61	50.5	15.47	50.3	16.09	50.2	16.52	50.2	17.06	50.1	17.93
	-11.8	-13.0	51.4	14.91	51.4	15.68	51.2	16.23	51.2	16.72	51.1	17.15	51.0	18.00
	-9.8	-11.0	52.4	15.15	52.3	15.90	52.1	16.40	52.1	16.79	52.0	17.19	52.0	18.02
	-9.5	-10.0	52.8	15.22	52.7	15.93	52.6	16.42	52.6	16.81	52.5	17.25	52.4	17.95
	-8.5	-9.1	53.3	15.33	53.2	16.01	53.0	16.40	53.0	16.83	53.0	17.23	52.9	17.99
	-7.0	-7.6	53.9	15.41	53.8	16.01	53.7	16.44	53.7	16.80	53.6	17.20	53.5	17.91
	-5.0	-5.6	56.1	15.79	55.9	16.08	55.8	16.77	55.8	17.13	55.8	17.51	55.6	18.11
	-3.0	-3.7	58.3	16.20	58.1	16.76	58.1	17.08	57.9	17.42	57.9	17.74	57.7	18.34
	0.0	-0.7	62.9	16.98	62.9	17.51	62.7	17.78	62.7	18.08	62.5	18.40	62.5	18.96
	3.0	2.2	67.9	17.68	67.7	18.17	67.5	18.41	67.5	18.69	67.5	19.00	67.3	19.51
	5.0	4.1	71.3	18.13	71.1	18.59	71.1	18.80	70.9	19.08	70.9	19.36	70.7	19.85
	7.0	6.0	74.9	18.55	74.7	18.97	74.7	19.18	74.5	17.35	74.5	19.70	71.5	18.97
	9.0	7.9	78.7	18.93	78.5	19.35	78.5	19.52	78.3	19.78	76.7	19.43	71.5	17.83
	11.0	9.8	82.7	19.32	82.5	19.69	82.1	19.72	79.3	18.99	76.7	18.26	71.5	16.80
	13.0	11.8	87.3	19.73	86.9	20.05	82.4	18.56	79.3	17.80	76.7	17.14	71.5	15.77
	15.0	13.7	92.8	20.34	88.6	19.28	82.4	17.49	79.3	16.80	76.7	16.16	71.5	14.88
	18.0	16.8	92.8	19.26	88.6	18.36	82.4	16.60	79.3	15.96	76.7	15.27	71.5	14.14
	20.0	18.5	92.8	18.33	88.6	17.54	82.4	15.84	79.3	15.25	76.7	14.52	71.5	13.51
	24.0	20.5	92.8	17.54	88.6	16.87	82.4	15.23	79.3	14.66	76.7	13.87	71.5	13.02
120%	-19.8	-20.0	48.0	14.98	48.0	15.92	47.8	16.58	47.8	17.03	47.8	17.56	47.7	18.55
	-18.8	-19.0	48.6	15.21	48.4	16.11	48.3	16.48	48.3	17.23	48.3	17.71	48.1	18.68
	-16.7	-17.0	49.4	15.49	49.4	16.37	49.2	16.85	49.2	17.38	49.1	17.83	49.1	18.77
	-13.7	-15.0	50.5	15.76	50.3	16.55	50.1	17.07	50.2	17.54	50.1	17.96	50.0	18.82
	-11.8	-13.0	51.3	15.98	51.2	16.69	51.1	17.16	51.0	17.56	51.0	18.03	50.9	18.79
	-9.8	-11.0	52.3	16.15	52.1	16.83	52.0	17.19	52.0	17.67	52.0	18.03	51.8	18.81
	-9.5	-10.0	52.7	16.18	52.5	16.84	52.5	17.25	52.4	17.62	52.4	17.84	52.2	18.70
	-8.5	-9.1	53.2	16.26	53.0	16.89	53.0	17.23	52.9	17.64	52.9	18.01	52.7	18.71
	-7.0	-7.6	53.8	16.29	53.7	16.86	53.6	17.19	53.5	17.53	53.5	17.92	53.4	18.54
	-5.0	-5.6	55.9	16.60	55.8	17.17	55.7	17.51	55.7	17.82	55.6	18.14	55.5	18.75
	-3.0	-3.7	58.1	16.96	58.1	17.49	57.9	17.74	57.9	18.04	57.7	18.37	57.7	18.93
	0.0	-0.7	62.7	17.68	62.7	18.17	62.5	18.60	62.5	18.68	62.3	18.96	62.3	19.51
	3.0	2.2	67.7	18.34	67.5	18.78	67.5	18.97	67.3	19.25	67.3	19.52	65.9	19.47
	5.0	4.1	71.1	18.74	70.9	19.16	70.9	19.34	70.7	19.60	70.7	19.86	65.9	18.29
	7.0	6.0	74.7	19.13	74.7	19.52	74.5	19.68	73.3	19.46	70.9	18.71	65.9	17.22
	9.0	7.9	78.5	19.51	78.3	19.89	75.7	19.00	73.3	18.29	70.9	17.60	65.9	16.21
	11.0	9.8	82.5	19.85	81.3	19.69	76.1	17.98	73.3	17.22	70.9	16.57	65.9	15.28
	13.0	11.8	87.2	20.05	81.9	18.61	76.1	16.87	73.3	16.18	70.9	15.58	65.9	14.37
	15.0	13.7	87.6	18.97	81.9	17.53	76.1	15.93	73.3	15.26	70.9	14.70	65.9	13.57
	18.0	16.8	87.6	17.92	81.9	16.60	76.1	15.13	73.3	14.46	70.9	13.92	65.9	12.87
	20.0	18.5	87.6	16.99	81.9	15.84	76.1	14.48	73.3	13.79	70.9	13.27	65.9	12.26
	24.0	20.5	87.6	16.16	81.9	15.19	76.1	13.95	73.3	13.22	70.9	12.74	65.9	11.75

TC—Total capacity of outdoor unit; PI—Power input of outdoor unit														
Connection ratio	Outdoor air temp.（℃）		Indoor air temp.（℃ DB）											
			16		18		20		21		22		24	
			TC	PI	TC	PI	TC	PI	TC	PI	TC	PI	TC	PI
	℃ DB	℃ WB	kW	kW	kW	kW	kW	kW	kW	kW	kW	kW	kW	kW
110%	-19.8	-20.0	47.9	16.32	47.8	17.18	47.7	17.73	47.7	18.21	47.7	18.65	47.5	19.58
	-18.8	-19.0	48.4	16.51	48.3	17.26	48.2	17.81	48.2	18.24	48.1	18.78	48.1	19.62
	-16.7	-17.0	49.3	16.71	49.2	17.53	49.1	17.92	49.0	18.41	49.1	18.89	48.9	19.72
	-13.7	-15.0	50.3	16.92	50.1	17.66	50.1	18.11	50.0	18.50	50.0	18.91	49.9	19.74
	-11.8	-13.0	51.1	17.08	51.1	17.72	50.9	18.09	50.9	18.45	50.9	18.94	50.8	19.63
	-9.8	-11.0	52.1	17.16	52.0	17.79	51.9	18.08	51.9	18.52	51.8	18.86	51.8	19.52
	-9.5	-10.0	52.5	17.14	52.4	17.74	52.3	18.10	52.3	18.43	52.2	18.77	52.2	19.47
	-8.5	-9.1	53.0	17.19	52.9	17.78	52.8	18.04	52.8	18.37	52.7	18.77	52.7	19.37
	-7.0	-7.6	53.6	17.18	53.6	17.68	53.4	17.95	53.4	18.27	53.4	18.40	53.3	19.23
	-5.0	-5.6	55.8	17.43	55.6	17.95	55.6	18.21	55.5	18.51	57.5	18.62	55.4	19.44
	-3.0	-3.7	57.9	17.73	57.9	18.19	57.7	18.39	57.7	18.68	62.3	18.98	57.5	19.52
	0.0	-0.7	62.5	18.38	62.5	18.83	62.3	18.99	62.3	19.26	64.9	19.56	60.5	19.23
	3.0	2.2	67.5	19.00	67.3	19.40	67.3	19.53	67.1	19.77	64.9	19.03	60.5	17.51
	5.0	4.1	70.9	19.36	70.9	19.76	69.5	19.31	67.1	18.59	64.9	17.90	60.5	16.47
	7.0	6.0	74.5	19.72	73.9	19.84	69.8	18.22	67.1	17.49	64.9	16.83	60.5	15.51
	9.0	7.9	78.3	20.04	75.1	18.96	69.9	17.18	67.2	16.49	64.9	15.85	60.5	14.62
	11.0	9.8	80.5	19.37	75.1	17.84	69.9	16.18	67.2	15.54	64.9	14.95	60.5	13.80
	13.0	11.8	80.5	18.17	75.1	16.74	69.9	15.21	67.2	14.62	64.9	14.06	60.5	13.00
	15.0	13.7	80.5	17.12	75.1	15.79	69.9	14.38	67.2	13.81	64.9	13.31	60.5	12.30
	18.0	16.8	80.5	16.20	75.1	14.96	69.9	13.12	67.2	13.09	64.9	12.68	60.5	11.71
	20.0	18.5	80.5	15.37	75.1	14.23	69.9	12.45	67.2	12.46	64.9	12.15	60.5	11.20
	24.0	20.5	80.5	14.67	75.1	13.58	69.9	11.86	67.2	11.94	64.9	11.71	60.5	10.78
100%	-19.8	-20.0	47.6	17.60	47.5	18.38	47.4	18.73	47.3	19.25	47.2	19.61	47.1	20.52
	-18.8	-19.0	48.1	17.77	47.9	18.41	47.8	18.83	47.8	19.25	47.7	19.75	47.5	20.48
	-16.7	-17.0	49.0	17.89	48.9	18.62	48.7	18.88	48.7	19.30	48.5	19.71	48.4	20.44
	-13.7	-15.0	50.0	18.02	49.8	18.67	49.7	18.93	49.6	19.40	49.4	19.68	49.2	20.43
	-11.8	-13.0	50.8	18.11	50.7	18.65	50.5	18.92	50.6	19.31	50.2	18.86	50.2	20.29
	-9.8	-11.0	51.8	18.10	51.6	18.67	51.5	18.84	51.4	19.18	51.1	19.48	51.0	20.03
	-9.5	-10.0	52.2	18.05	52.1	18.62	51.9	18.76	52.0	19.19	51.5	19.35	51.4	19.97
	-8.5	-9.1	52.6	18.03	52.4	18.48	52.3	18.71	52.3	19.02	51.9	19.29	51.8	19.80
	-7.0	-7.6	53.1	17.92	53.0	18.37	52.8	18.54	52.9	18.87	52.5	19.04	52.5	19.65
	-5.0	-5.6	55.1	18.09	54.9	18.53	54.9	18.69	54.7	18.98	54.7	19.26	54.7	19.79
	-3.0	-3.7	57.7	18.49	57.7	18.91	57.5	19.05	57.5	19.32	57.5	19.60	55.1	18.84
	0.0	-0.7	62.3	19.11	62.3	19.48	62.1	19.59	61.1	19.34	59.1	18.60	55.1	17.14
	3.0	2.2	67.3	19.64	67.1	19.99	63.1	18.25	61.1	17.59	59.1	16.95	55.1	15.61
	5.0	4.1	70.7	20.00	67.1	18.78	63.0	17.15	61.1	16.57	59.1	15.97	55.1	14.72
	7.0	6.0	71.1	18.98	67.1	17.66	63.0	15.25	61.1	15.61	59.1	15.04	55.1	13.88
	9.0	7.9	72.7	18.23	67.8	16.79	63.0	15.11	61.1	14.72	59.1	14.18	55.1	13.10
	11.0	9.8	72.7	17.17	67.8	15.82	63.0	14.27	61.1	13.88	59.1	13.39	55.1	12.38
	13.0	11.8	72.7	16.12	67.8	14.88	63.0	13.45	61.1	13.09	59.1	12.63	55.1	11.68
	15.0	13.7	72.7	15.21	67.8	14.04	63.0	12.71	61.1	12.37	59.1	11.94	55.1	11.07
	18.0	16.8	72.7	14.34	67.8	13.39	63.0	12.30	61.1	11.75	59.1	11.30	55.1	10.54
	20.0	18.5	72.7	13.53	67.8	12.86	63.0	11.81	61.1	11.22	59.1	10.78	55.1	10.12
	24.0	20.5	72.7	12.79	67.8	12.43	63.0	11.35	61.1	10.80	59.1	10.36	55.1	9.80

GMV X DC Inverter VRF Units

TC—Total capacity of outdoor unit; PI—Power input of outdoor unit														
Connection ratio	Outdoor air temp.（℃）		Indoor air temp.（℃ DB）											
			16		18		20		21		22		24	
			TC	PI	TC	PI	TC	PI	TC	PI	TC	PI	TC	PI
	℃ DB	℃ WB	kW	kW	kW	kW	kW	kW	kW	kW	kW	kW	kW	kW
90%	-19.8	-20.0	47.4	18.94	47.4	19.67	47.3	19.92	47.3	20.42	47.4	20.88	47.1	21.51
	-18.8	-19.0	48.0	19.08	47.8	19.69	47.8	20.01	47.9	20.45	47.8	20.83	47.7	21.61
	-16.7	-17.0	48.8	19.15	48.8	19.83	48.7	20.02	48.7	20.42	48.7	20.87	48.4	21.46
	-13.7	-15.0	49.8	19.20	49.7	19.80	49.6	19.97	49.6	20.22	49.5	20.73	48.5	20.97
	-11.8	-13.0	50.7	19.19	50.7	19.74	50.6	19.93	50.6	20.28	50.5	20.60	48.5	20.48
	-9.8	-11.0	51.6	19.10	51.5	19.54	51.4	19.74	51.5	20.12	51.5	20.43	48.6	19.91
	-9.5	-10.0	52.1	19.02	52.0	19.56	51.9	19.62	52.0	20.05	51.9	20.36	48.9	19.69
	-8.5	-9.1	52.5	18.98	52.3	19.39	52.3	19.56	52.4	19.88	52.3	20.18	49.5	19.59
	-7.0	-7.6	53.0	18.80	52.9	19.21	52.9	19.38	52.9	19.66	52.8	19.93	49.5	18.71
	-5.0	-5.6	54.9	18.90	54.6	19.26	54.7	19.37	54.6	19.60	53.1	19.11	49.5	17.59
	-3.0	-3.7	57.5	19.26	57.5	17.51	56.9	19.40	54.8	18.65	53.1	18.00	49.5	16.59
	0.0	-0.7	62.3	19.81	60.5	17.19	56.9	17.63	54.8	16.95	53.1	16.37	49.5	15.09
	3.0	2.2	64.1	18.87	60.5	17.57	56.9	16.08	54.8	15.48	53.1	14.95	49.5	13.81
	5.0	4.1	64.6	17.87	61.2	16.73	56.9	15.16	54.8	14.59	53.1	14.11	49.5	13.03
	7.0	6.0	65.5	17.04	61.2	15.76	56.9	14.29	54.8	13.77	53.1	13.32	49.5	12.31
	9.0	7.9	65.5	16.06	61.2	14.83	56.9	13.48	54.8	13.00	53.1	12.58	49.5	11.64
	11.0	9.8	65.5	15.13	61.2	14.00	56.9	12.75	54.8	12.30	53.1	11.89	49.5	11.03
	13.0	11.8	65.5	14.24	61.2	13.20	56.9	12.02	54.8	11.61	53.1	11.24	49.5	10.41
	15.0	13.7	65.5	13.45	61.2	12.47	56.9	11.40	54.8	10.96	53.1	10.65	49.5	9.89
	18.0	16.8	65.5	12.72	61.2	11.78	56.9	10.81	54.8	10.35	53.1	10.10	49.5	9.40
	20.0	18.5	65.5	12.02	61.2	11.13	56.9	10.27	54.8	9.77	53.1	9.59	49.5	8.98
	24.0	20.5	65.5	11.35	61.2	10.51	56.9	9.75	54.8	9.22	53.1	9.11	49.5	8.58
80%	-19.8	-20.0	47.3	20.29	47.2	20.94	47.2	21.07	47.3	21.50	46.9	21.84	43.0	20.62
	-18.8	-19.0	47.8	20.40	47.7	20.92	47.6	21.13	47.7	21.55	47.0	21.57	43.0	20.49
	-16.7	-17.0	48.7	20.39	48.6	21.00	48.6	21.10	48.6	21.45	47.0	21.11	43.1	19.99
	-13.7	-15.0	49.7	20.36	49.5	20.89	49.5	20.97	49.1	21.12	47.1	20.69	43.5	19.65
	-11.8	-13.0	50.5	20.28	50.5	20.74	50.4	20.86	49.1	20.63	47.1	20.11	44.1	18.99
	-9.8	-11.0	51.5	20.11	51.3	20.50	51.0	20.50	49.2	20.04	47.3	19.48	44.1	17.94
	-9.5	-10.0	51.9	19.98	51.9	20.47	51.0	20.16	49.2	19.73	47.3	18.92	44.1	17.42
	-8.5	-9.1	52.3	19.91	52.3	20.31	51.0	19.91	49.2	19.25	47.3	18.42	44.1	16.95
	-7.0	-7.6	52.8	19.69	52.8	20.05	50.9	19.10	49.1	18.34	47.3	17.61	44.1	16.28
	-5.0	-5.6	54.7	17.56	54.5	19.85	50.6	17.86	48.8	17.16	47.3	16.57	44.1	15.27
	-3.0	-3.7	56.9	17.66	54.5	18.69	50.6	16.83	48.8	16.25	47.3	15.63	44.1	14.43
	0.0	-0.7	56.9	17.96	54.5	16.96	50.6	15.34	48.8	14.76	47.3	14.25	44.1	13.17
	3.0	2.2	58.3	16.77	54.5	15.47	50.6	14.04	48.8	13.49	47.3	13.05	44.1	12.08
	5.0	4.1	58.3	15.79	54.5	14.59	50.6	13.25	48.8	12.74	47.3	12.34	44.1	11.42
	7.0	6.0	58.3	14.88	54.5	13.79	50.6	12.52	48.8	12.06	47.3	11.67	44.1	10.81
	9.0	7.9	58.3	14.05	54.5	12.99	50.6	11.89	48.8	11.39	47.3	11.04	44.1	10.24
	11.0	9.8	58.3	13.26	54.5	12.28	50.6	11.21	48.8	10.78	47.3	10.45	44.1	9.71
	13.0	11.8	58.3	12.50	54.5	11.59	50.6	10.60	48.8	10.20	47.3	9.89	44.1	9.19
	15.0	13.7	58.3	11.82	54.5	10.99	50.6	10.06	48.8	9.68	47.3	9.38	44.1	8.74
	18.0	16.8	58.3	11.28	54.5	10.45	50.6	9.58	48.8	9.20	47.3	8.90	44.1	8.34
	20.0	18.5	58.3	10.84	54.5	10.02	50.6	9.16	48.8	8.78	47.3	8.47	44.1	7.96
	24.0	20.5	58.3	10.52	54.5	9.69	50.6	8.78	48.8	8.40	47.3	8.10	44.1	7.62

TC—Total capacity of outdoor unit; PI—Power input of outdoor unit														
Connection ratio	Outdoor air temp.（℃）		Indoor air temp.（℃ DB）											
			16		18		20		21		22		24	
			TC	PI	TC	PI	TC	PI	TC	PI	TC	PI	TC	PI
	℃ DB	℃ WB	kW	kW	kW	kW	kW	kW	kW	kW	kW	kW	kW	kW
70%	-19.8	-20.0	47.1	21.64	47.1	22.22	44.4	20.98	42.8	20.53	41.1	20.06	38.5	19.16
	-18.8	-19.0	47.7	21.74	47.6	22.21	44.5	20.83	42.8	20.38	41.1	19.91	38.5	18.76
	-16.7	-17.0	48.5	21.63	47.9	21.81	44.5	20.35	42.9	19.90	41.2	19.38	38.5	17.90
	-13.7	-15.0	49.5	21.53	48.0	21.38	44.6	19.85	43.0	19.28	41.3	18.46	38.5	17.02
	-11.8	-13.0	50.3	21.36	48.0	20.75	44.6	18.95	43.0	18.28	41.3	17.51	38.5	16.14
	-9.8	-11.0	51.3	21.12	48.0	19.99	44.7	17.95	43.0	17.31	41.3	16.58	38.5	15.29
	-9.5	-10.0	51.5	20.83	48.1	19.41	44.7	17.44	43.0	16.82	41.4	16.13	38.5	14.87
	-8.5	-9.1	51.5	20.52	48.1	18.89	44.7	16.98	43.0	16.39	41.4	15.71	38.5	14.49
	-7.0	-7.6	51.4	19.56	48.0	18.01	44.6	16.23	43.0	15.67	41.3	15.01	38.5	13.88
	-5.0	-5.6	51.1	18.27	47.7	16.85	44.3	15.21	42.7	14.66	41.3	14.15	38.5	13.10
	-3.0	-3.7	51.1	17.20	47.7	15.88	44.3	14.36	42.7	13.86	41.3	13.38	38.5	12.39
	0.0	-0.7	51.1	15.66	47.7	14.55	44.3	13.12	42.7	12.67	41.3	12.25	38.5	11.36
	3.0	2.2	51.1	14.31	47.7	13.26	44.3	12.05	42.7	11.63	41.3	11.24	38.5	10.43
	5.0	4.1	51.1	13.50	47.7	12.50	44.3	11.40	42.7	11.01	41.3	10.66	38.5	9.88
	7.0	6.0	51.1	12.76	47.7	11.83	44.3	10.78	42.7	10.42	41.3	10.09	38.5	9.37
	9.0	7.9	51.1	12.07	47.7	11.19	44.3	10.22	42.7	9.88	41.3	9.56	38.5	8.89
	11.0	9.8	51.1	11.41	47.7	10.58	44.3	9.70	42.7	9.38	41.3	9.08	38.5	8.44
	13.0	11.8	51.1	10.78	47.7	10.02	44.3	9.17	42.7	8.89	41.3	8.60	38.5	8.02
	15.0	13.7	51.1	10.22	47.7	9.51	44.3	8.72	42.7	8.45	41.3	8.18	38.5	7.64
	18.0	16.8	51.1	9.69	47.7	9.03	44.3	8.30	42.7	8.06	41.3	7.80	38.5	7.30
	20.0	18.5	51.1	9.24	47.7	8.60	44.3	7.92	42.7	7.70	41.3	7.46	38.5	7.01
	24.0	20.5	51.1	8.82	47.7	8.21	44.3	7.61	42.7	7.38	41.3	7.19	38.5	6.75
60%	-19.8	-20.0	43.9	21.47	41.0	20.53	38.1	18.60	36.7	17.85	35.5	17.24	33.1	15.90
	-18.8	-19.0	43.9	21.30	41.0	20.27	38.1	18.23	36.7	17.50	35.5	16.87	33.1	15.56
	-16.7	-17.0	43.9	20.78	41.1	19.45	38.2	17.43	36.7	16.73	35.5	16.12	33.1	14.89
	-13.7	-15.0	44.0	20.11	41.1	18.51	38.3	16.62	36.8	15.96	35.5	15.36	33.1	14.18
	-11.8	-13.0	44.0	19.03	41.1	17.54	38.3	15.78	36.8	15.16	35.5	14.59	33.1	13.49
	-9.8	-11.0	44.1	18.01	41.2	16.61	38.3	14.97	36.9	14.37	35.5	13.82	33.1	12.80
	-9.5	-10.0	44.1	17.51	41.2	16.16	38.3	14.57	36.9	14.00	35.5	13.44	33.1	12.44
	-8.5	-9.1	44.1	17.05	41.2	15.74	38.3	14.21	36.9	13.65	35.5	13.11	33.1	12.15
	-7.0	-7.6	44.0	16.27	41.1	15.04	38.3	13.58	36.8	13.06	35.5	12.57	33.1	11.66
	-5.0	-5.6	43.8	15.24	40.9	14.09	38.0	12.76	36.6	12.26	35.5	11.88	33.1	11.03
	-3.0	-3.7	43.8	14.39	40.9	13.31	38.0	12.12	36.6	11.62	35.5	11.25	33.1	10.44
	0.0	-0.7	43.8	13.14	40.9	12.19	38.0	11.08	36.6	10.67	35.5	10.33	33.1	9.60
	3.0	2.2	43.8	12.05	40.9	11.19	38.0	10.21	36.6	9.82	35.5	9.54	33.1	8.86
	5.0	4.1	43.8	11.40	40.9	10.59	38.0	9.67	36.6	9.32	35.5	9.03	33.1	8.42
	7.0	6.0	43.8	10.79	40.9	10.03	38.0	9.17	36.6	8.84	35.5	8.59	33.1	8.00
	9.0	7.9	43.8	10.22	40.9	9.51	38.0	8.71	36.6	8.40	35.5	8.15	33.1	7.62
	11.0	9.8	43.8	9.69	40.9	9.03	38.0	8.29	36.6	7.98	35.5	7.75	33.1	7.26
	13.0	11.8	43.8	9.17	40.9	8.56	38.0	7.87	36.6	7.59	35.5	7.37	33.1	6.90
	15.0	13.7	43.8	8.73	40.9	8.13	38.0	7.49	36.6	7.23	35.5	7.03	33.1	6.58
	18.0	16.8	43.8	8.34	40.9	7.74	38.0	7.16	36.6	6.92	35.5	6.74	33.1	6.31
	20.0	18.5	43.8	7.99	40.9	7.39	38.0	6.87	36.6	6.65	35.5	6.49	33.1	6.08
	24.0	20.5	43.8	7.69	40.9	7.09	38.0	6.61	36.6	6.41	35.5	6.28	33.1	5.86

GMV X DC Inverter VRF Units

TC—Total capacity of outdoor unit; PI—Power input of outdoor unit														
Connection ratio	Outdoor air temp.（℃）		Indoor air temp.（℃ DB）											
			16		18		20		21		22		24	
			TC	PI	TC	PI	TC	PI	TC	PI	TC	PI	TC	PI
	℃ DB	℃ WB	kW	kW	kW	kW	kW	kW	kW	kW	kW	kW	kW	kW
50%	-19.8	-20.0	36.6	18.01	34.2	16.60	31.8	14.90	30.6	14.46	29.4	13.87	27.5	12.87
	-18.8	-19.0	36.6	17.64	34.2	16.27	31.8	14.63	30.7	14.16	29.5	13.60	27.5	12.62
	-16.7	-17.0	36.6	16.85	34.2	15.55	31.8	14.01	30.7	13.57	29.5	13.05	27.5	12.09
	-13.7	-15.0	36.7	16.07	34.3	14.85	31.9	13.38	30.8	12.98	29.6	12.47	27.5	11.55
	-11.8	-13.0	36.7	15.26	34.3	14.13	31.9	12.75	30.8	12.35	29.6	11.87	27.5	11.00
	-9.8	-11.0	36.8	14.47	34.4	13.40	32.0	12.12	30.8	11.75	29.6	11.30	27.5	10.46
	-9.5	-10.0	36.8	14.09	34.4	13.03	32.0	11.82	30.8	11.46	29.6	11.01	27.5	10.19
	-8.5	-9.1	36.8	13.73	34.4	12.73	32.0	11.53	30.8	11.19	29.6	10.76	27.5	9.95
	-7.0	-7.6	36.7	13.14	34.3	12.23	31.9	11.05	30.8	10.73	29.6	10.32	27.5	9.58
	-5.0	-5.6	36.5	12.32	34.1	11.44	31.7	10.41	30.6	10.10	29.5	9.76	27.5	9.07
	-3.0	-3.7	36.5	11.67	34.1	10.84	31.7	9.87	30.6	9.58	29.5	9.25	27.5	8.63
	0.0	-0.7	36.5	10.71	34.1	9.96	31.7	9.11	30.6	8.83	29.5	8.54	27.5	7.97
	3.0	2.2	36.5	9.86	34.1	9.18	31.7	8.40	30.6	8.16	29.5	7.91	27.5	7.38
	5.0	4.1	36.5	9.36	34.1	8.71	31.7	7.98	30.6	7.77	29.5	7.51	27.5	7.03
	7.0	6.0	36.5	8.88	34.1	8.28	31.7	7.61	30.6	7.39	29.5	7.16	27.5	6.71
	9.0	7.9	36.5	8.43	34.1	7.87	31.7	7.23	30.6	7.05	29.5	6.82	27.5	6.39
	11.0	9.8	36.5	8.01	34.1	7.48	31.7	6.90	30.6	6.72	29.5	6.50	27.5	6.10
	13.0	11.8	36.5	7.62	34.1	7.12	31.7	6.57	30.6	6.40	29.5	6.19	27.5	5.82
	15.0	13.7	36.5	7.25	34.1	6.79	31.7	6.27	30.6	6.11	29.5	5.91	27.5	5.55
	18.0	16.8	36.5	6.90	34.1	6.49	31.7	6.02	30.6	5.85	29.5	5.66	27.5	5.29
	20.0	18.5	36.5	6.58	34.1	6.21	31.7	5.79	30.6	5.64	29.5	5.43	27.5	5.06
	24.0	20.5	36.5	6.27	34.1	5.95	31.7	5.39	30.6	5.45	29.5	5.22	27.5	4.85

GMV-615WM/B-X(P)

TC—Total capacity of outdoor unit; PI—Power input of outdoor unit														
Connection ratio	Outdoor air temp.（℃）		Indoor air temp.（℃ DB）											
			16		18		20		21		22		24	
			TC	PI	TC	PI	TC	PI	TC	PI	TC	PI	TC	PI
	℃ DB	℃ WB	kW	kW	kW	kW	kW	kW	kW	kW	kW	kW	kW	kW
135%	-19.8	-20.0	48.5	15.07	48.4	16.18	48.3	17.02	48.2	17.57	48.2	18.22	48.0	19.30
	-18.8	-19.0	48.9	15.32	48.8	16.39	48.6	17.11	48.6	17.74	48.5	18.27	48.4	19.40
	-16.7	-17.0	49.7	15.68	49.5	16.67	49.5	17.45	49.4	17.89	49.4	18.48	49.2	19.57
	-13.7	-15.0	50.6	16.03	50.6	17.01	50.4	17.67	50.3	18.15	50.3	18.75	50.1	19.67
	-11.8	-13.0	51.5	16.39	51.5	17.24	51.3	17.83	51.3	18.38	51.2	18.85	51.1	19.78
	-9.8	-11.0	53.5	16.98	53.3	17.80	53.1	18.32	53.1	18.78	53.1	19.25	52.9	20.12
	-9.5	-10.0	54.9	17.34	54.6	18.13	54.4	18.63	54.4	19.09	54.2	19.53	54.2	20.38
	-8.5	-9.1	56.0	17.65	55.7	18.41	55.7	18.91	55.5	19.34	55.5	19.78	55.3	20.63
	-7.0	-7.6	57.9	18.16	57.9	18.92	57.7	19.36	57.7	19.80	57.5	20.21	57.3	21.04
	-5.0	-5.6	61.0	18.85	60.8	19.17	60.6	19.97	60.6	20.38	60.3	20.77	60.3	21.55
	-3.0	-3.7	63.8	19.46	63.7	20.17	63.6	20.50	63.4	20.92	63.4	21.31	63.2	22.03
	0.0	-0.7	68.9	20.40	68.9	21.04	68.7	21.35	68.7	21.71	68.4	22.10	68.4	22.78
	3.0	2.2	75.1	21.46	74.8	22.02	74.1	22.17	74.0	22.47	73.9	22.81	73.7	23.44
	5.0	4.1	78.8	21.98	78.5	22.52	78.2	22.67	77.8	22.96	77.7	23.27	77.4	23.85
	7.0	6.0	82.7	22.47	82.3	22.93	81.9	23.06	81.7	20.87	81.7	23.70	78.3	22.79
	9.0	7.9	86.7	22.89	86.0	23.26	86.0	23.46	85.9	23.80	84.0	23.34	78.3	21.42
	11.0	9.8	90.7	23.24	90.5	23.70	90.2	23.77	86.9	22.83	84.0	21.93	78.3	20.18
	13.0	11.8	95.5	23.67	95.3	24.13	90.2	22.29	86.9	21.40	84.0	20.60	78.3	18.94
	15.0	13.7	100.1	24.08	95.7	22.84	90.2	21.01	86.9	20.19	84.0	19.41	78.3	17.88
	18.0	16.8	100.1	22.80	95.7	21.74	90.2	19.94	86.9	19.18	84.0	18.35	78.3	16.99
	20.0	18.5	100.1	21.70	95.7	20.77	90.2	19.03	86.9	18.33	84.0	17.44	78.3	16.23
	24.0	20.5	100.1	20.75	95.7	19.98	90.2	18.30	86.9	17.62	84.0	16.66	78.3	15.64
120%	-19.8	-20.0	48.3	16.54	48.3	17.57	48.1	18.29	48.1	18.80	48.0	19.34	47.9	20.44
	-18.8	-19.0	48.8	16.76	48.6	17.75	48.5	18.15	48.4	18.93	48.4	19.47	48.3	20.57
	-16.7	-17.0	49.5	17.03	49.4	17.97	49.3	18.52	49.3	19.10	49.2	19.60	49.1	20.59
	-13.7	-15.0	50.5	17.30	50.4	18.20	50.2	18.75	50.2	19.23	50.1	19.70	50.0	20.64
	-11.8	-13.0	51.4	17.57	51.3	18.34	51.2	18.85	51.1	19.30	51.1	19.81	50.9	20.62
	-9.8	-11.0	53.3	18.08	53.1	18.82	53.1	19.26	52.9	19.70	52.9	20.12	52.7	20.98
	-9.5	-10.0	54.6	18.41	54.4	19.15	54.2	19.54	54.2	19.98	54.2	20.25	54.0	21.21
	-8.5	-9.1	55.7	18.69	55.5	19.40	55.5	19.80	55.3	20.21	55.3	20.66	55.1	21.44
	-7.0	-7.6	57.7	19.18	57.7	19.86	57.5	20.23	57.5	20.64	57.3	21.04	57.3	21.80
	-5.0	-5.6	60.8	19.79	60.6	20.45	60.3	20.79	60.3	21.18	60.3	21.58	60.1	22.28
	-3.0	-3.7	63.6	20.38	63.6	21.01	63.4	21.30	63.4	21.66	63.2	22.06	63.2	22.74
	0.0	-0.7	68.7	21.25	68.7	21.83	68.4	22.34	68.4	22.43	68.2	22.78	68.2	23.43
	3.0	2.2	74.7	22.20	74.5	22.74	73.9	22.78	73.7	23.12	73.7	23.44	72.2	23.39
	5.0	4.1	78.6	22.73	78.4	23.25	77.6	23.22	77.4	23.54	77.4	23.86	72.2	21.97
	7.0	6.0	82.5	23.18	81.9	23.49	81.6	23.63	80.2	23.34	77.6	22.47	72.2	20.68
	9.0	7.9	86.5	23.58	85.8	23.91	83.4	22.95	80.2	21.96	77.6	21.14	72.2	19.47
	11.0	9.8	90.5	23.89	88.2	23.44	83.4	21.59	80.2	20.68	77.6	19.91	72.2	18.35
	13.0	11.8	93.7	23.63	88.2	21.99	83.4	20.26	80.2	19.43	77.6	18.72	72.2	17.26
	15.0	13.7	93.7	22.25	88.2	20.71	83.4	19.13	80.2	18.32	77.6	17.66	72.2	16.30
	18.0	16.8	93.7	21.03	88.2	19.61	83.4	18.17	80.2	17.37	77.6	16.73	72.2	15.46
	20.0	18.5	93.7	19.93	88.2	18.72	83.4	17.39	80.2	16.56	77.6	15.94	72.2	14.73
	24.0	20.5	93.7	18.95	88.2	17.95	83.4	16.76	80.2	15.88	77.6	15.31	72.2	14.12

GMV X DC Inverter VRF Units

TC—Total capacity of outdoor unit; PI—Power input of outdoor unit														
Connection ratio	Outdoor air temp.（℃）		Indoor air temp.（℃ DB）											
			16		18		20		21		22		24	
			TC	PI	TC	PI	TC	PI	TC	PI	TC	PI	TC	PI
	℃ DB	℃ WB	kW	kW	kW	kW	kW	kW	kW	kW	kW	kW	kW	kW
110%	-19.8	-20.0	48.2	18.04	48.0	18.93	48.0	19.56	47.9	20.05	47.9	20.54	47.8	21.62
	-18.8	-19.0	48.6	18.19	48.5	19.01	48.3	19.56	48.4	20.09	48.3	20.68	48.2	21.57
	-16.7	-17.0	49.4	18.38	49.2	19.24	49.2	19.69	49.1	20.23	49.1	20.72	49.0	21.68
	-13.7	-15.0	50.3	18.56	50.2	19.41	50.1	19.85	50.0	20.29	50.0	20.74	49.9	21.65
	-11.8	-13.0	51.2	18.78	51.1	19.44	51.0	19.87	51.0	20.28	50.9	20.78	50.9	21.58
	-9.8	-11.0	53.1	19.18	52.9	19.86	52.9	20.20	52.7	20.62	52.7	21.02	52.7	21.79
	-9.5	-10.0	54.4	19.49	54.2	20.15	54.0	20.48	54.0	20.88	54.0	21.28	53.8	22.01
	-8.5	-9.1	55.5	19.74	55.3	20.40	55.3	20.71	55.3	21.11	55.1	21.51	55.1	22.22
	-7.0	-7.6	57.5	20.20	57.5	20.81	57.3	21.09	57.3	21.49	57.9	21.87	57.1	22.58
	-5.0	-5.6	60.6	20.76	60.3	21.37	60.1	21.60	60.1	21.97	63.0	22.36	59.9	23.04
	-3.0	-3.7	63.4	21.30	63.4	21.85	63.2	22.09	63.2	22.44	68.2	22.80	63.0	23.45
	0.0	-0.7	68.4	22.09	68.4	22.62	68.2	22.81	68.2	23.13	71.1	23.49	66.3	23.10
	3.0	2.2	74.8	23.10	74.2	23.47	74.0	23.55	73.8	23.85	71.1	22.86	66.3	21.03
	5.0	4.1	78.5	23.52	78.2	23.91	76.4	23.26	73.5	22.33	71.1	21.50	66.3	19.79
	7.0	6.0	82.2	23.87	81.6	24.04	76.4	21.89	73.6	21.03	71.1	20.22	66.3	18.63
	9.0	7.9	86.3	24.23	81.6	22.60	76.5	20.63	73.7	19.82	71.1	19.04	66.3	17.56
	11.0	9.8	86.3	22.79	81.6	21.26	76.5	19.43	73.7	18.69	71.1	17.95	66.3	16.58
	13.0	11.8	86.3	21.38	81.6	19.95	76.5	18.28	73.7	17.58	71.1	16.90	66.3	15.61
	15.0	13.7	86.3	20.14	81.6	18.81	76.5	17.27	73.7	16.60	71.1	15.99	66.3	14.78
	18.0	16.8	86.3	19.06	81.6	17.83	76.5	15.76	73.7	15.74	71.1	15.23	66.3	14.06
	20.0	18.5	86.3	18.09	81.6	16.96	76.5	14.95	73.7	14.98	71.1	14.60	66.3	13.46
	24.0	20.5	86.3	17.26	81.6	16.19	76.5	14.24	73.7	14.35	71.1	14.07	66.3	12.95
100%	-19.8	-20.0	47.9	19.44	47.7	20.25	47.6	20.63	47.5	21.20	47.5	21.64	47.3	22.60
	-18.8	-19.0	48.2	19.54	48.1	20.29	47.9	20.69	48.0	21.19	47.8	21.70	47.7	22.56
	-16.7	-17.0	49.1	19.67	48.9	20.43	48.8	20.74	48.7	21.17	48.5	21.61	48.4	22.42
	-13.7	-15.0	50.0	19.77	49.8	20.49	49.7	20.76	49.6	21.27	49.4	21.58	49.2	22.41
	-11.8	-13.0	50.9	19.91	50.7	20.47	50.6	20.79	50.6	21.18	50.3	20.73	50.2	22.25
	-9.8	-11.0	52.9	20.28	52.7	20.91	52.7	21.14	52.7	21.54	52.5	21.92	52.5	22.62
	-9.5	-10.0	54.2	20.56	54.0	21.17	54.0	21.39	53.8	21.77	53.8	22.15	53.5	22.85
	-8.5	-9.1	55.3	20.79	55.3	21.40	55.1	21.60	55.1	21.97	54.9	22.36	54.9	23.02
	-7.0	-7.6	57.3	21.20	57.3	21.78	57.1	21.95	57.1	22.33	57.1	22.69	56.8	23.36
	-5.0	-5.6	60.3	21.73	60.1	22.26	60.1	22.44	59.9	22.79	59.9	23.13	59.9	23.77
	-3.0	-3.7	63.2	22.22	63.2	22.72	63.0	22.88	63.0	23.21	63.0	23.54	60.3	22.63
	0.0	-0.7	68.2	22.96	68.2	23.41	68.0	23.52	66.9	23.22	64.7	22.34	60.3	20.59
	3.0	2.2	74.1	23.72	73.9	24.16	69.1	21.92	66.9	21.13	64.7	20.36	60.3	18.75
	5.0	4.1	78.2	24.27	74.3	22.82	69.0	20.60	66.9	19.90	64.7	19.18	60.3	17.68
	7.0	6.0	79.6	23.31	74.3	21.45	69.0	17.75	66.9	18.75	64.7	18.07	60.3	16.67
	9.0	7.9	79.6	21.90	74.3	20.18	69.0	18.15	66.9	17.68	64.7	17.04	60.3	15.73
	11.0	9.8	79.6	20.62	74.3	19.02	69.0	17.14	66.9	16.67	64.7	16.08	60.3	14.87
	13.0	11.8	79.6	19.37	74.3	17.89	69.0	16.16	66.9	15.72	64.7	15.17	60.3	14.04
	15.0	13.7	79.6	18.27	74.3	16.88	69.0	15.27	66.9	14.86	64.7	14.34	60.3	13.30
	18.0	16.8	79.6	17.22	74.3	16.10	69.0	14.77	66.9	14.11	64.7	13.58	60.3	12.67
	20.0	18.5	79.6	16.26	74.3	15.46	69.0	14.18	66.9	13.48	64.7	12.95	60.3	12.16
	24.0	20.5	79.6	15.37	74.3	14.94	69.0	13.64	66.9	12.98	64.7	12.44	60.3	11.78

TC—Total capacity of outdoor unit; PI—Power input of outdoor unit														
Connection ratio	Outdoor air temp.（℃）		Indoor air temp.（℃ DB）											
			16		18		20		21		22		24	
			TC	PI	TC	PI	TC	PI	TC	PI	TC	PI	TC	PI
	℃ DB	℃ WB	kW	kW	kW	kW	kW	kW	kW	kW	kW	kW	kW	kW
90%	-19.8	-20.0	47.7	20.92	47.6	21.67	47.5	21.93	47.5	22.48	47.6	22.99	47.3	23.69
	-18.8	-19.0	48.1	20.98	48.0	21.69	48.0	22.03	48.0	22.47	47.9	22.90	47.8	23.75
	-16.7	-17.0	48.9	21.05	48.8	21.76	48.7	21.95	48.7	22.39	48.8	22.93	48.5	23.58
	-13.7	-15.0	49.8	21.07	49.7	21.72	49.6	21.89	49.6	22.18	49.7	22.82	49.5	23.48
	-11.8	-13.0	50.8	21.10	50.7	21.66	50.6	21.85	50.6	22.24	50.6	22.64	50.4	23.35
	-9.8	-11.0	52.7	21.38	52.7	21.93	52.5	22.07	52.5	22.46	52.5	22.82	52.2	23.47
	-9.5	-10.0	54.0	21.63	53.8	22.19	53.8	22.30	53.5	22.66	53.5	23.03	53.5	23.65
	-8.5	-9.1	55.1	21.86	55.1	22.39	54.9	22.50	54.9	22.84	54.9	23.21	54.2	23.53
	-7.0	-7.6	57.1	22.22	57.1	22.72	56.8	22.84	56.8	23.17	56.8	23.52	54.2	22.47
	-5.0	-5.6	60.1	22.71	59.9	23.18	59.9	23.25	59.9	23.59	58.1	22.95	54.2	21.13
	-3.0	-3.7	63.0	23.14	63.0	21.04	62.3	23.29	60.1	22.45	58.1	21.62	54.2	19.92
	0.0	-0.7	68.2	23.80	66.3	20.65	62.3	21.17	60.1	20.41	58.1	19.66	54.2	18.13
	3.0	2.2	71.8	23.19	67.0	21.36	62.3	19.30	60.1	18.63	58.1	17.96	54.2	16.59
	5.0	4.1	71.8	21.80	67.0	20.10	62.3	18.21	60.1	17.56	58.1	16.95	54.2	15.65
	7.0	6.0	71.8	20.49	67.0	18.93	62.3	17.16	60.1	16.58	58.1	15.99	54.2	14.79
	9.0	7.9	71.8	19.32	67.0	17.82	62.3	16.19	60.1	15.66	58.1	15.11	54.2	13.98
	11.0	9.8	71.8	18.20	67.0	16.81	62.3	15.32	60.1	14.80	58.1	14.28	54.2	13.25
	13.0	11.8	71.8	17.12	67.0	15.86	62.3	14.44	60.1	13.97	58.1	13.50	54.2	12.51
	15.0	13.7	71.8	16.18	67.0	14.98	62.3	13.69	60.1	13.19	58.1	12.79	54.2	11.88
	18.0	16.8	71.8	15.29	67.0	14.15	62.3	12.99	60.1	12.46	58.1	12.13	54.2	11.29
	20.0	18.5	71.8	14.46	67.0	13.37	62.3	12.34	60.1	11.76	58.1	11.53	54.2	10.78
	24.0	20.5	71.8	13.65	67.0	12.63	62.3	11.71	60.1	11.10	58.1	10.94	54.2	10.30
80%	-19.8	-20.0	47.6	22.40	47.4	23.07	47.4	23.19	47.5	23.67	47.4	24.20	47.1	24.80
	-18.8	-19.0	47.9	22.42	47.9	23.05	47.8	23.26	47.8	23.68	47.8	24.07	47.2	24.64
	-16.7	-17.0	48.7	22.37	48.6	23.04	48.6	23.13	48.6	23.52	48.6	23.94	47.2	24.04
	-13.7	-15.0	49.7	22.34	49.5	22.92	49.5	22.99	49.6	23.39	49.5	23.86	47.6	23.61
	-11.8	-13.0	50.6	22.29	50.5	22.76	50.4	22.87	50.5	23.27	50.4	23.62	48.3	22.80
	-9.8	-11.0	52.5	22.48	52.5	22.98	52.2	23.02	52.2	23.34	51.8	23.39	48.3	21.55
	-9.5	-10.0	53.8	22.71	53.5	23.18	53.5	23.21	53.5	23.55	51.8	22.72	48.3	20.92
	-8.5	-9.1	54.9	22.91	54.9	23.39	54.6	23.39	53.5	22.98	51.8	22.12	48.3	20.36
	-7.0	-7.6	56.8	23.24	56.8	23.69	55.3	22.75	53.5	21.94	51.8	21.15	48.3	19.56
	-5.0	-5.6	59.9	21.10	58.8	23.51	55.4	21.45	53.5	20.65	51.8	19.90	48.3	18.35
	-3.0	-3.7	62.3	21.22	58.8	22.14	55.4	20.21	53.5	19.56	51.8	18.77	48.3	17.34
	0.0	-0.7	62.3	21.58	58.8	20.09	55.4	18.42	53.5	17.76	51.8	17.11	48.3	15.82
	3.0	2.2	63.8	20.14	59.6	18.57	55.4	16.86	53.5	16.24	51.8	15.68	48.3	14.51
	5.0	4.1	63.8	18.96	59.6	17.51	55.4	15.91	53.5	15.34	51.8	14.82	48.3	13.72
	7.0	6.0	63.8	17.86	59.6	16.55	55.4	15.04	53.5	14.51	51.8	14.02	48.3	12.99
	9.0	7.9	63.8	16.87	59.6	15.59	55.4	14.29	53.5	13.71	51.8	13.26	48.3	12.30
	11.0	9.8	63.8	15.93	59.6	14.74	55.4	13.46	53.5	12.98	51.8	12.56	48.3	11.67
	13.0	11.8	63.8	15.01	59.6	13.91	55.4	12.73	53.5	12.28	51.8	11.87	48.3	11.04
	15.0	13.7	63.8	14.20	59.6	13.19	55.4	12.08	53.5	11.65	51.8	11.27	48.3	10.50
	18.0	16.8	63.8	13.54	59.6	12.54	55.4	11.50	53.5	11.07	51.8	10.69	48.3	10.02
	20.0	18.5	63.8	13.02	59.6	12.02	55.4	11.00	53.5	10.57	51.8	10.18	48.3	9.56
	24.0	20.5	63.8	12.63	59.6	11.63	55.4	10.55	53.5	10.11	51.8	9.72	48.3	9.16

GMV X DC Inverter VRF Units

TC—Total capacity of outdoor unit; PI—Power input of outdoor unit														
Connection ratio	Outdoor air temp.（℃）		Indoor air temp.（℃ DB）											
			16		18		20		21		22		24	
			TC	PI	TC	PI	TC	PI	TC	PI	TC	PI	TC	PI
	℃ DB	℃ WB	kW	kW	kW	kW	kW	kW	kW	kW	kW	kW	kW	kW
70%	-19.8	-20.0	47.3	23.84	47.3	24.48	47.2	24.46	46.8	24.63	45.0	24.10	42.2	23.01
	-18.8	-19.0	47.8	23.90	47.7	24.42	47.7	24.49	46.9	24.45	45.1	23.92	42.2	22.53
	-16.7	-17.0	48.5	23.73	48.5	24.23	48.4	24.28	46.9	23.88	45.1	23.28	42.2	21.50
	-13.7	-15.0	49.6	23.65	49.4	24.15	48.8	23.83	47.0	22.52	45.2	22.19	42.2	20.45
	-11.8	-13.0	50.3	23.44	50.3	23.87	48.8	22.75	47.0	21.94	45.2	21.04	42.2	19.39
	-9.8	-11.0	52.2	23.58	51.6	23.54	48.9	21.55	47.1	20.78	45.3	19.92	42.2	18.36
	-9.5	-10.0	53.5	23.78	51.9	23.00	48.9	20.94	47.1	20.19	45.3	19.38	42.2	17.85
	-8.5	-9.1	54.6	23.91	52.4	22.60	48.9	20.39	47.1	19.66	45.3	18.88	42.2	17.40
	-7.0	-7.6	54.6	22.84	52.5	21.63	48.8	19.49	47.0	18.80	45.2	18.04	42.2	16.67
	-5.0	-5.6	55.9	21.94	52.2	20.24	48.5	18.26	46.7	17.60	45.2	16.99	42.2	15.74
	-3.0	-3.7	55.9	20.66	52.2	19.07	48.5	17.25	46.7	16.63	45.2	16.07	42.2	14.88
	0.0	-0.7	55.9	18.80	52.2	17.47	48.5	15.76	46.7	15.21	45.2	14.71	42.2	13.64
	3.0	2.2	55.9	17.18	52.2	15.92	48.5	14.47	46.7	13.96	45.2	13.50	42.2	12.53
	5.0	4.1	55.9	16.21	52.2	15.01	48.5	13.70	46.7	13.21	45.2	12.80	42.2	11.87
	7.0	6.0	55.9	15.32	52.2	14.21	48.5	12.95	46.7	12.51	45.2	12.12	42.2	11.26
	9.0	7.9	55.9	14.49	52.2	13.44	48.5	12.27	46.7	11.86	45.2	11.49	42.2	10.68
	11.0	9.8	55.9	13.70	52.2	12.71	48.5	11.65	46.7	11.25	45.2	10.91	42.2	10.14
	13.0	11.8	55.9	12.95	52.2	12.04	48.5	11.02	46.7	10.68	45.2	10.33	42.2	9.64
	15.0	13.7	55.9	12.27	52.2	11.42	48.5	10.47	46.7	10.15	45.2	9.82	42.2	9.18
	18.0	16.8	55.9	11.64	52.2	10.85	48.5	9.97	46.7	9.67	45.2	9.37	42.2	8.77
	20.0	18.5	55.9	11.09	52.2	10.33	48.5	9.52	46.7	9.24	45.2	8.96	42.2	8.42
	24.0	20.5	55.9	10.59	52.2	9.87	48.5	9.14	46.7	8.86	45.2	8.63	42.2	8.11
60%	-19.8	-20.0	47.2	25.33	44.9	24.68	41.7	22.33	40.2	21.45	38.9	20.70	36.2	19.09
	-18.8	-19.0	47.6	25.36	45.0	24.37	41.8	21.89	40.2	21.03	38.9	20.26	36.2	18.69
	-16.7	-17.0	48.2	24.99	45.0	23.38	41.8	20.93	40.3	20.12	38.9	19.36	36.2	17.89
	-13.7	-15.0	48.3	24.19	45.1	22.26	41.9	19.96	40.4	19.19	38.9	18.44	36.2	17.03
	-11.8	-13.0	48.3	22.90	45.1	21.08	41.9	18.94	40.4	18.22	38.9	17.52	36.2	16.20
	-9.8	-11.0	48.3	21.66	45.2	19.96	42.0	17.98	40.4	17.28	38.9	16.59	36.2	15.37
	-9.5	-10.0	48.4	21.06	45.2	19.43	42.0	17.49	40.4	16.84	38.9	16.14	36.2	14.94
	-8.5	-9.1	48.4	20.51	45.2	18.93	42.0	17.07	40.4	16.41	38.9	15.74	36.2	14.59
	-7.0	-7.6	48.3	19.57	45.1	18.08	41.9	16.31	40.4	15.71	38.9	15.09	36.2	14.01
	-5.0	-5.6	48.0	18.33	44.8	16.94	41.6	15.32	40.1	14.75	38.9	14.27	36.2	13.25
	-3.0	-3.7	48.0	17.30	44.8	16.00	41.6	14.55	40.1	13.97	38.9	13.51	36.2	12.54
	0.0	-0.7	48.0	15.81	44.8	14.65	41.6	13.31	40.1	12.83	38.9	12.41	36.2	11.53
	3.0	2.2	48.0	14.50	44.8	13.46	41.6	12.26	40.1	11.80	38.9	11.45	36.2	10.64
	5.0	4.1	48.0	13.71	44.8	12.73	41.6	11.61	40.1	11.20	38.9	10.85	36.2	10.12
	7.0	6.0	48.0	12.97	44.8	12.06	41.6	11.01	40.1	10.63	38.9	10.32	36.2	9.61
	9.0	7.9	48.0	12.29	44.8	11.43	41.6	10.46	40.1	10.10	38.9	9.79	36.2	9.15
	11.0	9.8	48.0	11.66	44.8	10.86	41.6	9.96	40.1	9.60	38.9	9.31	36.2	8.72
	13.0	11.8	48.0	11.03	44.8	10.29	41.6	9.46	40.1	9.12	38.9	8.85	36.2	8.29
	15.0	13.7	48.0	10.51	44.8	9.77	41.6	9.00	40.1	8.70	38.9	8.45	36.2	7.91
	18.0	16.8	48.0	10.03	44.8	9.30	41.6	8.60	40.1	8.32	38.9	8.10	36.2	7.58
	20.0	18.5	48.0	9.61	44.8	8.89	41.6	8.25	40.1	7.99	38.9	7.79	36.2	7.30
	24.0	20.5	48.0	9.25	44.8	8.53	41.6	7.94	40.1	7.71	38.9	7.54	36.2	7.04

TC—Total capacity of outdoor unit; PI—Power input of outdoor unit														
Connection ratio	Outdoor air temp.（℃）		Indoor air temp.（℃ DB）											
			16		18		20		21		22		24	
			TC	PI	TC	PI	TC	PI	TC	PI	TC	PI	TC	PI
	℃ DB	℃ WB	kW	kW	kW	kW	kW	kW	kW	kW	kW	kW	kW	kW
50%	-19.8	-20.0	40.1	21.67	37.5	19.99	34.8	17.89	33.6	17.37	32.2	16.62	30.1	15.46
	-18.8	-19.0	40.1	21.22	37.5	19.59	34.8	17.57	33.6	17.01	32.2	16.29	30.1	15.15
	-16.7	-17.0	40.2	20.27	37.6	18.73	34.9	16.82	33.6	16.31	32.2	15.64	30.1	14.52
	-13.7	-15.0	40.2	19.33	37.6	17.88	34.9	16.07	33.7	15.59	32.3	14.95	30.1	13.87
	-11.8	-13.0	40.2	18.36	37.6	17.02	34.9	15.30	33.7	14.84	32.3	14.22	30.1	13.22
	-9.8	-11.0	40.3	17.41	37.7	16.13	35.0	14.56	33.7	14.11	32.4	13.54	30.1	12.56
	-9.5	-10.0	40.3	16.94	37.7	15.69	35.0	14.19	33.8	13.77	32.4	13.20	30.1	12.23
	-8.5	-9.1	40.3	16.52	37.7	15.33	35.0	13.84	33.8	13.44	32.4	12.90	30.1	11.95
	-7.0	-7.6	40.2	15.81	37.6	14.72	34.9	13.27	33.7	12.89	32.3	12.37	30.1	11.50
	-5.0	-5.6	40.0	14.82	37.4	13.78	34.7	12.50	33.5	12.14	32.3	11.71	30.1	10.89
	-3.0	-3.7	40.0	14.04	37.4	13.05	34.7	11.85	33.5	11.51	32.3	11.11	30.1	10.36
	0.0	-0.7	40.0	12.89	37.4	11.99	34.7	10.94	33.5	10.61	32.3	10.26	30.1	9.58
	3.0	2.2	40.0	11.86	37.4	11.06	34.7	10.09	33.5	9.81	32.3	9.50	30.1	8.87
	5.0	4.1	40.0	11.26	37.4	10.49	34.7	9.59	33.5	9.33	32.3	9.02	30.1	8.44
	7.0	6.0	40.0	10.69	37.4	9.97	34.7	9.14	33.5	8.88	32.3	8.59	30.1	8.06
	9.0	7.9	40.0	10.14	37.4	9.47	34.7	8.69	33.5	8.48	32.3	8.19	30.1	7.68
	11.0	9.8	40.0	9.64	37.4	9.01	34.7	8.29	33.5	8.07	32.3	7.81	30.1	7.32
	13.0	11.8	40.0	9.17	37.4	8.57	34.7	7.89	33.5	7.69	32.3	7.43	30.1	6.99
	15.0	13.7	40.0	8.72	37.4	8.18	34.7	7.54	33.5	7.34	32.3	7.10	30.1	6.66
	18.0	16.8	40.0	8.30	37.4	7.81	34.7	7.24	33.5	7.04	32.3	6.80	30.1	6.36
	20.0	18.5	40.0	7.91	37.4	7.48	34.7	6.96	33.5	6.78	32.3	6.52	30.1	6.08
	24.0	20.5	40.0	7.54	37.4	7.17	34.7	6.48	33.5	6.56	32.3	6.27	30.1	5.82

GMV-680WM/B-X(P)

TC—Total capacity of outdoor unit; PI—Power input of outdoor unit														
Connection ratio	Outdoor air temp.（℃）		Indoor air temp.（℃ DB）											
			16		18		20		21		22		24	
			TC	PI	TC	PI	TC	PI	TC	PI	TC	PI	TC	PI
	℃ DB	℃ WB	kW	kW	kW	kW	kW	kW	kW	kW	kW	kW	kW	kW
135%	-19.8	-20.0	48.4	16.78	48.3	18.00	48.1	18.91	48.1	19.52	48.0	20.22	47.9	21.44
	-18.8	-19.0	48.9	17.05	48.8	18.26	48.6	19.04	48.4	19.69	48.3	20.26	48.2	21.57
	-16.7	-17.0	49.7	17.50	49.6	18.60	49.4	19.40	49.2	19.83	49.2	20.51	49.0	21.71
	-13.7	-15.0	50.6	17.88	50.5	18.95	50.3	19.67	50.2	20.16	50.1	20.80	50.0	21.85
	-11.8	-13.0	51.4	18.23	51.3	19.16	51.1	19.79	51.1	20.40	51.0	20.92	50.8	21.95
	-9.8	-11.0	54.2	19.18	54.1	20.12	53.7	20.66	53.4	21.06	53.2	21.47	52.8	22.37
	-9.5	-10.0	55.5	19.57	55.1	20.39	54.7	20.88	54.4	21.28	54.2	21.78	54.0	22.65
	-8.5	-9.1	56.9	20.02	56.2	20.70	55.8	21.10	55.4	21.52	55.2	21.93	55.0	22.89
	-7.0	-7.6	57.8	20.20	57.6	20.98	57.5	21.48	57.4	21.95	57.2	22.42	57.0	23.35
	-5.0	-5.6	61.8	21.30	61.4	21.59	60.8	22.34	60.6	22.73	60.3	23.14	60.1	23.93
	-3.0	-3.7	64.5	21.91	63.8	22.51	63.6	22.83	63.4	23.30	63.2	23.67	63.0	24.48
	0.0	-0.7	69.4	22.93	68.5	23.32	68.4	23.68	68.4	24.08	68.1	24.49	68.1	25.24
	3.0	2.2	75.7	24.11	75.3	24.72	73.9	24.65	73.6	24.92	73.6	25.33	73.4	26.03
	5.0	4.1	78.6	24.44	78.3	25.04	77.9	25.16	77.6	25.52	77.4	25.83	77.1	26.47
	7.0	6.0	82.5	24.98	82.3	25.56	81.8	25.66	81.4	23.17	81.4	26.30	78.7	25.53
	9.0	7.9	86.4	25.44	86.1	25.98	85.8	26.09	85.6	26.45	83.9	26.00	78.7	24.00
	11.0	9.8	90.4	25.83	90.2	26.34	89.9	26.39	86.9	25.45	84.0	24.46	78.7	22.61
	13.0	11.8	95.2	26.30	95.0	26.81	90.2	24.84	86.9	23.85	84.0	22.97	78.7	21.22
	15.0	13.7	99.7	26.75	95.9	25.51	90.2	23.41	86.9	22.51	84.0	21.65	78.7	20.03
	18.0	16.8	99.7	26.68	95.9	25.44	90.2	23.35	86.9	22.45	84.0	21.59	78.7	19.97
	20.0	18.5	99.7	26.57	95.9	25.35	90.2	23.26	86.9	22.37	84.0	21.51	78.7	19.90
	24.0	20.5	99.7	26.45	95.9	25.23	90.2	23.16	86.9	22.26	84.0	21.41	78.7	19.81
120%	-19.8	-20.0	48.3	18.43	48.2	19.56	48.0	20.34	47.8	20.84	47.8	21.44	47.7	22.70
	-18.8	-19.0	48.7	18.66	48.7	19.79	48.5	20.22	48.3	21.02	48.1	21.58	48.1	22.82
	-16.7	-17.0	49.6	18.99	49.5	20.06	49.3	20.61	49.1	21.19	49.1	21.78	48.9	22.84
	-13.7	-15.0	50.4	19.28	50.3	20.26	50.2	20.85	50.0	21.33	50.0	21.89	49.9	22.95
	-11.8	-13.0	51.2	19.53	51.2	20.40	51.0	20.94	50.9	21.40	50.8	21.99	50.7	22.90
	-9.8	-11.0	54.1	20.46	54.0	21.32	53.5	21.64	53.4	22.19	53.2	22.54	52.7	23.38
	-9.5	-10.0	55.3	20.79	54.9	21.55	54.5	21.91	54.2	22.28	53.9	22.46	53.9	23.62
	-8.5	-9.1	56.5	21.14	56.0	21.83	55.7	22.14	55.3	22.54	55.1	22.96	54.9	23.83
	-7.0	-7.6	57.7	21.38	57.5	22.07	57.2	22.43	57.2	22.88	57.1	23.39	56.9	24.15
	-5.0	-5.6	61.7	22.41	61.3	23.08	60.8	23.34	60.6	23.70	60.3	24.03	60.0	24.79
	-3.0	-3.7	63.8	22.78	63.5	23.37	63.1	23.61	63.0	23.98	62.9	24.47	62.8	25.19
	0.0	-0.7	69.3	23.92	68.4	24.24	68.1	24.75	68.1	24.86	68.0	25.29	67.9	25.98
	3.0	2.2	75.4	24.99	75.0	25.53	73.8	25.35	73.6	25.74	73.4	26.03	72.7	26.27
	5.0	4.1	78.4	25.28	78.1	25.82	77.8	25.92	77.6	26.28	77.4	26.58	72.5	24.61
	7.0	6.0	82.3	25.76	81.7	26.11	81.6	26.33	81.0	26.27	77.2	24.90	72.1	23.04
	9.0	7.9	86.2	26.21	85.7	26.63	83.3	25.54	81.3	24.79	77.2	23.43	72.1	21.69
	11.0	9.8	90.2	26.55	87.9	26.06	84.3	24.34	81.5	23.40	77.2	22.06	72.1	20.45
	13.0	11.8	93.4	26.26	87.9	24.44	84.3	22.84	81.5	21.98	77.2	20.75	72.1	19.23
	15.0	13.7	93.4	24.73	87.9	23.02	84.3	21.56	81.5	20.73	77.2	19.57	72.1	18.16
	18.0	16.8	93.4	24.66	87.9	22.96	84.3	21.51	81.5	20.68	77.2	19.52	72.1	18.11
	20.0	18.5	93.4	24.57	87.9	22.87	84.3	21.43	81.5	20.60	77.2	19.45	72.1	18.05
	24.0	20.5	93.4	24.45	87.9	22.76	84.3	21.33	81.5	20.51	77.2	19.36	72.1	17.97

TC—Total capacity of outdoor unit; PI—Power input of outdoor unit														
Connection ratio	Outdoor air temp.（℃）		Indoor air temp.（℃ DB）											
			16		18		20		21		22		24	
			TC	PI	TC	PI	TC	PI	TC	PI	TC	PI	TC	PI
	℃ DB	℃ WB	kW	kW	kW	kW	kW	kW	kW	kW	kW	kW	kW	kW
110%	-19.8	-20.0	48.1	20.11	48.1	21.14	47.9	21.77	47.9	22.32	47.8	22.85	47.7	24.02
	-18.8	-19.0	48.6	20.29	48.5	21.22	48.4	21.81	48.2	22.28	48.0	22.88	47.9	23.92
	-16.7	-17.0	49.5	20.52	49.4	21.50	49.2	21.94	49.0	22.48	48.9	23.02	48.8	24.04
	-13.7	-15.0	50.3	20.71	50.2	21.64	50.1	22.10	49.9	22.52	49.8	23.04	49.8	24.07
	-11.8	-13.0	51.1	20.90	51.0	21.65	50.8	22.06	50.7	22.48	50.7	23.05	50.6	23.92
	-9.8	-11.0	53.9	21.72	53.8	22.52	53.7	22.85	53.7	23.42	53.1	23.63	53.0	24.44
	-9.5	-10.0	55.0	21.97	56.2	23.29	56.1	23.72	56.1	24.18	55.5	24.39	54.1	24.68
	-8.5	-9.1	56.4	22.37	56.7	23.34	56.6	23.61	56.5	24.05	55.9	24.31	55.2	24.80
	-7.0	-7.6	57.5	22.53	57.4	23.17	57.2	23.49	57.2	23.92	56.5	23.78	56.2	24.79
	-5.0	-5.6	61.6	23.56	61.5	24.27	61.3	24.54	61.3	24.95	60.4	23.90	60.3	25.85
	-3.0	-3.7	63.7	23.85	66.0	25.34	65.9	25.65	65.8	26.05	64.9	24.18	63.9	26.50
	0.0	-0.7	69.1	24.88	68.3	25.15	67.9	25.27	70.4	26.58	69.2	25.50	67.4	26.19
	3.0	2.2	75.3	25.93	76.3	26.90	76.1	26.99	75.3	27.13	72.8	26.10	67.4	23.85
	5.0	4.1	78.1	26.08	83.5	28.48	78.3	26.59	77.2	26.12	73.5	24.78	67.4	22.44
	7.0	6.0	82.1	26.57	83.5	27.44	80.6	25.72	77.6	24.72	73.5	23.30	67.4	21.12
	9.0	7.9	85.9	26.90	83.5	25.79	80.8	24.28	77.7	23.30	73.5	21.94	67.4	19.92
	11.0	9.8	85.9	25.31	83.5	24.27	80.8	22.86	77.7	21.97	73.5	20.69	67.4	18.80
	13.0	11.8	85.9	23.74	83.5	22.77	80.8	21.51	77.7	20.67	73.5	19.47	67.4	17.70
	15.0	13.7	85.9	22.36	83.5	21.47	80.8	20.32	77.7	19.52	73.5	18.42	67.4	16.76
	18.0	16.8	85.9	22.30	83.5	21.42	80.8	20.27	77.7	19.46	73.5	18.37	67.4	16.71
	20.0	18.5	85.9	22.22	83.5	21.34	80.8	20.20	77.7	19.40	73.5	18.31	67.4	16.65
	24.0	20.5	85.9	22.12	83.5	21.24	80.8	20.11	77.7	19.31	73.5	18.23	67.4	16.58
100%	-19.8	-20.0	47.9	21.67	47.8	22.62	47.7	23.02	47.5	23.59	47.4	24.07	47.2	25.11
	-18.8	-19.0	48.3	21.82	48.2	22.65	48.1	23.13	47.9	23.58	47.8	24.17	47.6	25.05
	-16.7	-17.0	49.1	21.95	49.1	22.88	48.9	23.17	48.7	23.58	48.5	24.11	48.3	24.94
	-13.7	-15.0	50.0	22.05	50.0	22.92	49.8	23.17	49.6	23.68	49.4	24.04	49.1	24.90
	-11.8	-13.0	50.8	22.17	50.8	22.84	50.6	23.15	50.4	23.51	50.1	23.03	50.1	24.76
	-9.8	-11.0	53.6	22.94	53.5	23.68	53.3	23.84	53.4	24.32	53.0	24.67	52.6	25.28
	-9.5	-10.0	56.1	23.73	55.9	24.45	55.9	24.66	55.8	25.19	55.4	25.42	53.5	25.44
	-8.5	-9.1	56.4	23.66	56.4	24.31	56.2	24.54	56.2	24.97	55.7	25.29	54.8	25.63
	-7.0	-7.6	57.0	23.52	57.0	24.18	56.9	24.40	56.8	24.79	56.8	25.19	56.7	25.99
	-5.0	-5.6	60.5	24.31	60.4	24.92	60.3	25.07	60.1	25.49	59.7	25.70	59.7	26.41
	-3.0	-3.7	65.0	25.50	64.9	26.01	64.7	26.19	64.4	26.45	63.3	26.35	61.9	25.88
	0.0	-0.7	67.9	25.46	67.9	25.96	67.9	26.15	67.3	26.04	64.7	24.88	61.9	23.54
	3.0	2.2	74.9	26.75	74.6	27.18	72.2	25.52	69.5	24.47	66.8	23.41	61.9	21.43
	5.0	4.1	79.7	27.59	77.3	26.48	73.0	24.27	70.3	23.29	66.8	22.05	61.9	20.22
	7.0	6.0	79.7	26.03	77.3	24.90	76.0	21.11	70.3	21.95	66.8	20.78	61.9	19.06
	9.0	7.9	79.7	24.46	77.3	23.43	76.0	22.27	70.3	20.69	66.8	19.59	61.9	17.99
	11.0	9.8	79.7	23.03	77.3	22.08	76.0	21.03	70.3	19.51	66.8	18.49	61.9	17.01
	13.0	11.8	79.7	21.63	77.3	20.76	76.0	19.83	70.3	18.40	66.8	17.44	61.9	16.05
	15.0	13.7	79.7	20.40	77.3	19.59	76.0	18.74	70.3	17.40	66.8	16.49	61.9	15.21
	18.0	16.8	79.7	20.35	77.3	19.54	76.0	18.69	70.3	17.35	66.8	16.44	61.9	15.17
	20.0	18.5	79.7	20.28	77.3	19.47	76.0	18.62	70.3	17.29	66.8	16.39	61.9	15.12
	24.0	20.5	79.7	20.18	77.3	19.38	76.0	18.54	70.3	17.22	66.8	16.32	61.9	15.05

GMV X DC Inverter VRF Units

TC—Total capacity of outdoor unit; PI—Power input of outdoor unit														
Connection ratio	Outdoor air temp.（℃）		Indoor air temp.（℃ DB）											
			16		18		20		21		22		24	
			TC	PI	TC	PI	TC	PI	TC	PI	TC	PI	TC	PI
	℃ DB	℃ WB	kW	kW	kW	kW	kW	kW	kW	kW	kW	kW	kW	kW
90%	-19.8	-20.0	47.8	23.34	47.7	24.20	47.6	24.45	47.4	24.97	47.3	25.46	47.2	26.32
	-18.8	-19.0	62.5	30.42	62.4	31.41	62.4	31.89	62.4	32.55	62.3	33.19	58.4	32.34
	-16.7	-17.0	63.6	30.50	63.5	31.55	63.4	31.83	63.5	32.47	63.4	33.22	58.4	31.65
	-13.7	-15.0	64.7	30.50	64.7	31.53	64.6	31.71	64.6	32.16	63.9	32.72	58.6	30.93
	-11.8	-13.0	65.7	30.46	65.7	31.29	65.6	31.57	65.6	32.15	63.9	31.88	58.6	30.21
	-9.8	-11.0	66.8	30.24	66.8	31.01	66.7	31.24	66.5	31.72	64.0	31.05	58.6	29.37
	-9.5	-10.0	67.4	30.10	67.3	30.98	67.2	31.05	66.6	31.41	64.1	30.70	58.7	28.88
	-8.5	-9.1	67.9	30.03	67.7	30.70	67.7	30.94	66.6	30.91	64.1	30.20	58.7	28.38
	-7.0	-7.6	68.5	29.76	68.4	30.37	68.4	30.61	66.5	30.21	63.9	29.48	58.6	27.05
	-5.0	-5.6	72.8	30.65	72.7	31.35	68.7	29.69	66.1	29.00	63.6	27.95	58.2	25.30
	-3.0	-3.7	73.7	30.19	73.7	27.44	68.7	28.60	66.1	27.50	63.6	26.34	58.2	23.85
	0.0	-0.7	75.2	29.24	73.8	25.64	68.7	25.99	66.1	25.00	63.6	23.96	58.2	21.70
	3.0	2.2	77.4	27.87	73.8	26.21	68.7	23.71	66.1	22.83	63.6	21.88	58.2	19.86
	5.0	4.1	79.0	26.74	73.8	24.65	68.7	22.36	66.1	21.51	63.6	20.65	58.2	18.74
	7.0	6.0	79.0	25.14	73.8	23.23	68.7	21.08	66.1	20.32	63.6	19.49	58.2	17.71
	9.0	7.9	79.0	23.70	73.8	21.86	68.7	19.89	66.1	19.18	63.6	18.41	58.2	16.74
	11.0	9.8	79.0	22.32	73.8	20.63	68.7	18.81	66.1	18.14	63.6	17.40	58.2	15.86
	13.0	11.8	79.0	21.00	73.8	19.45	68.7	17.74	66.1	17.12	63.6	16.45	58.2	14.98
	15.0	13.7	79.0	19.85	73.8	18.38	68.7	16.82	66.1	16.17	63.6	15.58	58.2	14.22
	18.0	16.8	79.0	19.80	73.8	18.33	68.7	16.78	66.1	16.13	63.6	15.54	58.2	14.18
	20.0	18.5	79.0	19.73	73.8	18.26	68.7	16.72	66.1	16.07	63.6	15.49	58.2	14.13
	24.0	20.5	79.0	19.64	73.8	18.18	68.7	16.65	66.1	16.00	63.6	15.42	58.2	14.07
80%	-19.8	-20.0	47.6	24.98	47.6	25.80	47.4	25.84	47.3	26.27	47.2	26.84	47.0	27.56
	-18.8	-19.0	62.3	32.49	62.3	33.42	61.2	33.16	58.9	32.52	56.7	31.82	52.0	30.26
	-16.7	-17.0	63.4	32.45	63.3	33.44	61.3	32.50	59.0	31.82	56.7	31.13	52.0	29.52
	-13.7	-15.0	64.6	32.38	64.5	33.25	61.4	31.77	59.1	31.07	56.9	30.52	52.1	28.79
	-11.8	-13.0	65.6	32.22	65.5	32.92	61.4	31.04	59.1	30.35	56.9	29.67	52.1	27.44
	-9.8	-11.0	66.7	31.87	66.2	32.31	61.5	30.20	59.2	29.48	56.9	28.66	52.2	25.96
	-9.5	-10.0	67.2	31.66	66.2	31.95	61.5	29.71	59.2	29.03	57.0	27.85	52.2	25.22
	-8.5	-9.1	67.6	31.49	66.2	31.46	61.5	29.34	59.2	28.33	57.0	27.11	52.2	24.55
	-7.0	-7.6	68.3	31.14	66.1	30.70	61.4	28.15	59.1	26.99	56.9	25.87	52.1	23.53
	-5.0	-5.6	70.3	27.59	65.7	29.27	61.0	26.32	58.8	25.25	56.5	24.20	51.8	21.95
	-3.0	-3.7	70.3	26.69	65.7	27.56	61.0	24.80	58.8	23.92	56.5	22.83	51.8	20.74
	0.0	-0.7	70.3	27.14	65.7	25.01	61.0	22.61	58.8	21.72	56.5	20.81	51.8	18.93
	3.0	2.2	70.3	24.73	65.7	22.82	61.0	20.69	58.8	19.86	56.5	19.07	51.8	17.35
	5.0	4.1	70.3	23.28	65.7	21.52	61.0	19.53	58.8	18.76	56.5	18.03	51.8	16.41
	7.0	6.0	70.3	21.93	65.7	20.34	61.0	18.46	58.8	17.75	56.5	17.05	51.8	15.54
	9.0	7.9	70.3	20.71	65.7	19.16	61.0	17.54	58.8	16.77	56.5	16.13	51.8	14.72
	11.0	9.8	70.3	19.55	65.7	18.11	61.0	16.52	58.8	15.88	56.5	15.27	51.8	13.96
	13.0	11.8	70.3	18.43	65.7	17.10	61.0	15.63	58.8	15.02	56.5	14.44	51.8	13.20
	15.0	13.7	70.3	17.43	65.7	16.20	61.0	14.83	58.8	14.25	56.5	13.71	51.8	12.56
	18.0	16.8	70.3	17.39	65.7	16.16	61.0	14.79	58.8	14.21	56.5	13.67	51.8	12.53
	20.0	18.5	70.3	17.33	65.7	16.11	61.0	14.74	58.8	14.16	56.5	13.62	51.8	12.49
	24.0	20.5	70.3	17.25	65.7	16.04	61.0	14.68	58.8	14.10	56.5	13.57	51.8	12.44

TC—Total capacity of outdoor unit; PI—Power input of outdoor unit														
Connection ratio	Outdoor air temp.（℃）		Indoor air temp.（℃ DB）											
			16		18		20		21		22		24	
			TC	PI	TC	PI	TC	PI	TC	PI	TC	PI	TC	PI
	℃ DB	℃ WB	kW	kW	kW	kW	kW	kW	kW	kW	kW	kW	kW	kW
70%	-19.8	-20.0	47.4	26.62	47.3	27.30	47.1	27.16	46.8	27.42	46.2	27.54	44.8	27.25
	-18.8	-19.0	61.8	34.45	57.7	32.92	53.7	30.71	51.7	30.04	49.6	29.33	45.5	27.10
	-16.7	-17.0	61.8	33.70	57.8	32.20	53.7	30.00	51.7	29.34	49.7	28.55	45.5	25.89
	-13.7	-15.0	61.9	32.93	57.9	31.56	53.8	29.27	51.8	3.21	49.8	27.20	45.6	24.67
	-11.8	-13.0	61.9	32.15	57.9	30.63	53.8	27.94	51.8	26.95	49.8	25.80	45.6	23.39
	-9.8	-11.0	62.0	31.22	58.0	29.51	53.9	26.46	51.9	25.53	49.8	24.43	45.7	22.18
	-9.5	-10.0	62.1	30.73	58.0	28.66	53.9	25.72	51.9	24.80	49.9	23.77	45.7	21.58
	-8.5	-9.1	62.1	30.28	58.0	27.89	53.9	25.05	51.9	24.16	49.9	23.15	45.7	21.04
	-7.0	-7.6	61.9	28.86	57.9	26.59	53.8	23.94	51.8	23.10	49.8	22.13	45.6	20.11
	-5.0	-5.6	61.6	26.96	57.6	24.87	53.5	22.43	51.5	21.62	49.5	20.72	45.4	18.87
	-3.0	-3.7	61.6	25.38	57.6	23.44	53.5	21.19	51.5	20.43	49.5	19.59	45.4	17.85
	0.0	-0.7	61.6	23.10	57.6	21.47	53.5	19.36	51.5	18.69	49.5	17.93	45.4	16.36
	3.0	2.2	61.6	21.11	57.6	19.58	53.5	17.77	51.5	17.15	49.5	16.46	45.4	15.02
	5.0	4.1	61.6	19.92	57.6	18.45	53.5	16.83	51.5	16.23	49.5	15.60	45.4	14.24
	7.0	6.0	61.6	18.83	57.6	17.47	53.5	15.91	51.5	15.37	49.5	14.77	45.4	13.51
	9.0	7.9	61.6	17.80	57.6	16.51	53.5	15.08	51.5	14.57	49.5	14.01	45.4	12.81
	11.0	9.8	61.6	16.84	57.6	15.62	53.5	14.31	51.5	13.83	49.5	13.30	45.4	12.17
	13.0	11.8	61.6	15.91	57.6	14.80	53.5	13.54	51.5	13.12	49.5	12.59	45.4	11.56
	15.0	13.7	61.6	15.07	57.6	14.03	53.5	12.86	51.5	12.47	49.5	11.97	45.4	11.01
	18.0	16.8	61.6	15.04	57.6	14.00	53.5	12.83	51.5	12.44	49.5	11.94	45.4	10.98
	20.0	18.5	61.6	14.98	57.6	13.95	53.5	12.79	51.5	12.40	49.5	11.90	45.4	10.95
	24.0	20.5	61.6	14.92	57.6	13.89	53.5	12.73	51.5	12.34	49.5	11.85	45.4	10.90
60%	-19.8	-20.0	47.9	28.67	45.6	27.94	42.8	25.52	41.5	24.69	39.8	23.64	36.6	21.47
	-18.8	-19.0	53.0	31.47	49.5	29.89	46.0	26.85	44.3	25.79	42.6	24.75	39.0	22.42
	-16.7	-17.0	53.1	30.69	49.5	28.69	46.1	25.67	44.3	24.67	42.7	23.68	39.0	21.48
	-13.7	-15.0	53.2	29.71	49.6	27.31	46.1	24.49	44.4	23.53	42.8	22.60	39.1	20.49
	-11.8	-13.0	53.2	28.12	49.6	25.87	46.1	23.24	44.4	22.35	42.8	21.47	39.1	19.49
	-9.8	-11.0	53.3	26.60	49.7	24.49	46.2	22.06	44.5	21.19	42.8	20.37	39.2	18.52
	-9.5	-10.0	53.3	25.87	49.7	23.83	46.2	21.46	44.5	20.65	42.8	19.83	39.2	18.02
	-8.5	-9.1	53.3	25.19	49.7	23.22	46.2	20.94	44.5	20.13	42.8	19.34	39.2	17.59
	-7.0	-7.6	53.2	24.04	49.6	22.18	46.1	20.02	44.4	19.27	42.8	18.50	39.1	16.86
	-5.0	-5.6	52.9	22.51	49.3	20.78	45.9	18.81	44.2	18.09	42.5	17.39	38.9	15.85
	-3.0	-3.7	52.9	21.25	49.3	19.63	45.9	17.86	44.2	17.14	42.5	16.47	38.9	15.01
	0.0	-0.7	52.9	19.41	49.3	17.98	45.9	16.34	44.2	15.74	42.5	15.12	38.9	13.80
	3.0	2.2	52.9	17.80	49.3	16.51	45.9	15.05	44.2	14.48	42.5	13.96	38.9	12.74
	5.0	4.1	52.9	16.84	49.3	15.62	45.9	14.25	44.2	13.75	42.5	13.22	38.9	12.10
	7.0	6.0	52.9	15.93	49.3	14.79	45.9	13.52	44.2	13.04	42.5	12.58	38.9	11.49
	9.0	7.9	52.9	15.09	49.3	14.03	45.9	12.84	44.2	12.39	42.5	11.93	38.9	10.95
	11.0	9.8	52.9	14.32	49.3	13.33	45.9	12.22	44.2	11.78	42.5	11.35	38.9	10.43
	13.0	11.8	52.9	13.55	49.3	12.63	45.9	11.61	44.2	11.19	42.5	10.79	38.9	9.92
	15.0	13.7	52.9	12.90	49.3	11.99	45.9	11.05	44.2	10.67	42.5	10.30	38.9	9.46
	18.0	16.8	52.9	12.87	49.3	11.96	45.9	11.02	44.2	10.64	42.5	10.27	38.9	9.44
	20.0	18.5	52.9	12.83	49.3	11.92	45.9	10.99	44.2	10.61	42.5	10.24	38.9	9.40
	24.0	20.5	52.9	12.77	49.3	11.87	45.9	10.94	44.2	10.56	42.5	10.19	38.9	9.36

GMV X DC Inverter VRF Units

TC—Total capacity of outdoor unit; PI—Power input of outdoor unit														
Connection ratio	Outdoor air temp.（℃）		Indoor air temp.（℃ DB）											
			16		18		20		21		22		24	
			TC	PI	TC	PI	TC	PI	TC	PI	TC	PI	TC	PI
	℃ DB	℃ WB	kW	kW	kW	kW	kW	kW	kW	kW	kW	kW	kW	kW
50%	-19.8	-20.0	40.7	24.55	38.3	22.79	35.5	20.31	34.4	19.81	32.9	18.93	31.0	17.73
	-18.8	-19.0	44.2	26.04	41.3	24.03	38.4	21.58	37.0	20.87	35.5	20.02	32.6	18.29
	-16.7	-17.0	44.2	24.87	41.3	22.97	38.5	20.67	37.0	20.01	35.6	19.22	32.6	17.55
	-13.7	-15.0	44.3	23.73	41.4	21.93	38.5	19.74	37.1	19.13	35.6	18.37	32.7	16.79
	-11.8	-13.0	44.3	22.53	41.4	20.87	38.5	18.80	37.1	18.21	35.6	17.48	32.7	16.00
	-9.8	-11.0	44.4	21.37	41.5	19.78	38.6	17.89	37.2	17.32	35.7	16.64	32.8	15.23
	-9.5	-10.0	44.4	20.80	41.5	19.25	38.6	17.44	37.2	16.90	35.7	16.22	32.8	14.84
	-8.5	-9.1	44.4	20.28	41.5	18.80	38.6	17.01	37.2	16.50	35.7	15.85	32.8	14.50
	-7.0	-7.6	44.3	19.40	41.4	18.06	38.5	16.31	37.1	15.82	35.6	15.20	32.7	13.92
	-5.0	-5.6	44.0	18.19	41.2	16.90	38.3	15.36	36.9	14.90	35.4	14.32	32.5	13.11
	-3.0	-3.7	44.0	17.23	41.2	16.01	38.3	14.57	36.9	14.13	35.4	13.58	32.5	12.47
	0.0	-0.7	44.0	15.81	41.2	14.71	38.3	13.44	36.9	13.02	35.4	12.54	32.5	11.53
	3.0	2.2	44.0	14.56	41.2	13.56	38.3	12.40	36.9	12.04	35.4	11.61	32.5	10.67
	5.0	4.1	44.0	13.82	41.2	12.86	38.3	11.79	36.9	11.45	35.4	11.03	32.5	10.16
	7.0	6.0	44.0	13.12	41.2	12.23	38.3	11.23	36.9	10.90	35.4	10.51	32.5	9.70
	9.0	7.9	44.0	12.44	41.2	11.62	38.3	10.68	36.9	10.40	35.4	10.01	32.5	9.24
	11.0	9.8	44.0	11.83	41.2	11.05	38.3	10.19	36.9	9.91	35.4	9.55	32.5	8.81
	13.0	11.8	44.0	11.25	41.2	10.51	38.3	9.70	36.9	9.44	35.4	9.09	32.5	8.41
	15.0	13.7	44.0	10.71	41.2	10.03	38.3	9.26	36.9	9.01	35.4	8.68	32.5	8.02
	18.0	16.8	44.0	10.68	41.2	10.01	38.3	9.24	36.9	8.99	35.4	8.66	32.5	8.00
	20.0	18.5	44.0	10.64	41.2	9.97	38.3	9.21	36.9	8.95	35.4	8.63	32.5	7.97
	24.0	20.5	44.0	10.60	41.2	9.93	38.3	9.17	36.9	8.92	35.4	8.59	32.5	7.93

GMV-730WM/B-X(P)

TC—Total capacity of outdoor unit; PI—Power input of outdoor unit														
Connection ratio	Outdoor air temp.（℃）		Indoor air temp.（℃ DB）											
			16		18		20		21		22		24	
			TC	PI	TC	PI	TC	PI	TC	PI	TC	PI	TC	PI
	℃ DB	℃ WB	kW	kW	kW	kW	kW	kW	kW	kW	kW	kW	kW	kW
135%	-19.8	-20.0	52.6	17.33	52.5	18.58	52.3	19.53	52.2	20.16	52.1	20.89	52.0	22.14
	-18.8	-19.0	53.0	17.61	52.9	18.86	52.7	19.66	52.5	20.33	52.4	20.92	52.4	22.27
	-16.7	-17.0	54.0	18.07	53.8	19.20	53.6	20.04	53.4	20.48	53.4	21.18	53.2	22.42
	-13.7	-15.0	54.9	18.47	54.8	19.57	54.6	20.31	54.5	20.82	54.4	21.48	54.2	22.56
	-11.8	-13.0	55.8	18.82	55.7	19.78	55.5	20.44	55.4	21.07	55.4	21.61	55.2	22.67
	-9.8	-11.0	58.9	19.81	58.7	20.78	58.3	21.34	58.0	21.75	57.7	22.17	57.3	23.10
	-9.5	-10.0	60.3	20.21	59.9	21.06	59.4	21.56	59.1	21.97	58.9	22.49	58.7	23.39
	-8.5	-9.1	61.8	20.67	61.0	21.38	60.6	21.79	60.2	22.22	60.0	22.65	59.7	23.64
	-7.0	-7.6	62.7	20.86	62.6	21.67	62.4	22.18	62.3	22.67	62.1	23.16	61.9	24.11
	-5.0	-5.6	67.1	22.00	66.6	22.30	66.0	23.07	65.8	23.47	65.5	23.90	65.2	24.71
	-3.0	-3.7	70.0	22.63	69.2	23.25	69.0	23.58	68.8	24.06	68.6	24.44	68.4	25.28
	0.0	-0.7	75.4	23.68	74.4	24.08	74.2	24.45	74.2	24.87	73.9	25.29	73.9	26.07
	3.0	2.2	82.2	24.90	81.7	25.52	80.3	25.45	79.9	25.73	79.9	26.15	79.7	26.88
	5.0	4.1	85.3	25.24	85.0	25.86	84.5	25.99	84.2	26.35	84.0	26.68	83.7	27.34
	7.0	6.0	89.5	25.80	89.3	26.39	88.8	26.50	88.3	23.92	88.3	27.16	85.4	26.36
	9.0	7.9	93.8	26.27	93.5	26.83	93.2	26.94	93.0	27.31	91.1	26.85	85.4	24.78
	11.0	9.8	98.1	26.67	97.9	27.20	97.6	27.26	94.4	26.28	91.2	25.26	85.4	23.35
	13.0	11.8	103.3	27.16	103.1	27.69	97.9	25.65	94.4	24.63	91.2	23.72	85.4	21.91
	15.0	13.7	108.3	27.62	104.1	26.35	97.9	24.18	94.4	23.24	91.2	22.36	85.4	20.68
	18.0	16.8	108.3	27.55	104.1	26.27	97.9	24.11	94.4	23.18	91.2	22.30	85.4	20.63
	20.0	18.5	108.3	27.44	104.1	26.17	97.9	24.02	94.4	23.10	91.2	22.22	85.4	20.55
	24.0	20.5	108.3	27.31	104.1	26.05	97.9	23.91	94.4	22.99	91.2	22.11	85.4	20.46
120%	-19.8	-20.0	52.4	19.03	52.3	20.20	52.2	21.00	51.9	21.52	51.9	22.14	51.8	23.44
	-18.8	-19.0	52.9	19.27	52.8	20.44	52.6	20.88	52.4	21.71	52.3	22.29	52.2	23.56
	-16.7	-17.0	53.8	19.61	53.7	20.72	53.5	21.28	53.3	21.89	53.3	22.49	53.0	23.59
	-13.7	-15.0	54.8	19.91	54.6	20.92	54.5	21.54	54.2	22.03	54.3	22.60	54.2	23.70
	-11.8	-13.0	55.6	20.17	55.6	21.07	55.4	21.63	55.2	22.10	55.2	22.71	55.1	23.65
	-9.8	-11.0	58.8	21.13	58.6	22.02	58.1	22.35	58.0	22.91	57.7	23.27	57.2	24.14
	-9.5	-10.0	60.1	21.47	59.6	22.26	59.2	22.62	58.9	23.01	58.6	23.20	58.6	24.39
	-8.5	-9.1	61.4	21.83	60.8	22.55	60.5	22.87	60.1	23.27	59.9	23.71	59.6	24.61
	-7.0	-7.6	62.6	22.07	62.4	22.79	62.1	23.17	62.1	23.63	62.0	24.15	61.8	24.94
	-5.0	-5.6	67.0	23.14	66.5	23.83	66.0	24.10	65.8	24.48	65.5	24.82	65.1	25.60
	-3.0	-3.7	69.2	23.52	68.9	24.14	68.5	24.38	68.4	24.77	68.3	25.27	68.2	26.01
	0.0	-0.7	75.3	24.70	74.2	25.03	73.9	25.56	73.9	25.67	73.8	26.11	73.7	26.83
	3.0	2.2	81.9	25.81	81.4	26.36	80.1	26.18	79.9	26.58	79.7	26.88	78.9	27.13
	5.0	4.1	85.1	26.10	84.8	26.66	84.4	26.77	84.2	27.14	84.0	27.45	78.7	25.42
	7.0	6.0	89.3	26.61	88.6	26.96	88.5	27.19	87.9	27.13	83.8	25.72	78.3	23.79
	9.0	7.9	93.6	27.07	93.1	27.51	90.4	26.38	88.2	25.60	83.8	24.19	78.3	22.40
	11.0	9.8	97.9	27.41	95.4	26.91	91.5	25.13	88.4	24.17	83.8	22.78	78.3	21.12
	13.0	11.8	101.4	27.12	95.4	25.24	91.5	23.58	88.4	22.70	83.8	21.42	78.3	19.86
	15.0	13.7	101.4	25.54	95.4	23.77	91.5	22.27	88.4	21.41	83.8	20.21	78.3	18.75
	18.0	16.8	101.4	25.47	95.4	23.71	91.5	22.21	88.4	21.35	83.8	20.16	78.3	18.71
	20.0	18.5	101.4	25.37	95.4	23.62	91.5	22.13	88.4	21.28	83.8	20.09	78.3	18.64
	24.0	20.5	101.4	25.25	95.4	23.51	91.5	22.03	88.4	21.18	83.8	19.99	78.3	18.56

GMV X DC Inverter VRF Units

TC—Total capacity of outdoor unit; PI—Power input of outdoor unit														
Connection ratio	Outdoor air temp.（℃）		Indoor air temp.（℃ DB）											
			16		18		20		21		22		24	
			TC	PI	TC	PI	TC	PI	TC	PI	TC	PI	TC	PI
	℃ DB	℃ WB	kW	kW	kW	kW	kW	kW	kW	kW	kW	kW	kW	kW
110%	-19.8	-20.0	52.3	20.76	52.2	21.83	52.0	22.48	52.0	23.05	51.9	23.59	51.8	24.81
	-18.8	-19.0	52.8	20.95	52.7	21.91	52.5	22.52	52.3	23.01	52.1	23.62	52.0	24.70
	-16.7	-17.0	53.7	21.19	53.6	22.20	53.4	22.66	53.2	23.21	53.1	23.77	53.0	24.83
	-13.7	-15.0	54.6	21.39	54.5	22.35	54.3	22.82	54.1	23.26	54.1	23.79	54.1	24.86
	-11.8	-13.0	55.5	21.58	55.4	22.36	55.2	22.78	55.0	23.22	55.0	23.81	54.9	24.70
	-9.8	-11.0	58.6	22.43	58.4	23.26	58.3	23.60	58.3	24.18	57.7	24.40	57.5	25.24
	-9.5	-10.0	59.7	22.69	61.0	24.05	60.9	24.50	60.9	24.97	60.3	25.19	58.7	25.49
	-8.5	-9.1	61.3	23.10	61.6	24.10	61.4	24.38	61.4	24.84	60.6	25.10	59.9	25.61
	-7.0	-7.6	62.4	23.26	62.3	23.92	62.1	24.26	62.1	24.70	61.3	24.55	61.0	25.60
	-5.0	-5.6	66.9	24.33	66.7	25.06	66.5	25.34	66.5	25.77	65.6	24.69	65.5	26.70
	-3.0	-3.7	69.1	24.63	71.6	26.17	71.5	26.49	71.5	26.90	70.5	24.97	69.3	27.37
	0.0	-0.7	75.0	25.69	74.1	25.98	73.7	26.10	76.4	27.45	75.2	26.34	73.2	27.05
	3.0	2.2	81.7	26.78	82.8	27.78	82.6	27.87	81.8	28.01	79.0	26.96	73.2	24.63
	5.0	4.1	84.8	26.94	90.7	29.41	85.0	27.46	83.8	26.98	79.8	25.59	73.2	23.18
	7.0	6.0	89.1	27.44	90.7	28.34	87.5	26.57	84.3	25.53	79.8	24.06	73.2	21.81
	9.0	7.9	93.3	27.78	90.7	26.64	87.7	25.07	84.3	24.06	79.8	22.66	73.2	20.57
	11.0	9.8	93.3	26.13	90.7	25.06	87.7	23.61	84.3	22.69	79.8	21.37	73.2	19.41
	13.0	11.8	93.3	24.51	90.7	23.51	87.7	22.21	84.3	21.35	79.8	20.11	73.2	18.28
	15.0	13.7	93.3	23.10	90.7	22.18	87.7	20.99	84.3	20.15	79.8	19.03	73.2	17.30
	18.0	16.8	93.3	23.03	90.7	22.12	87.7	20.93	84.3	20.10	79.8	18.98	73.2	17.26
	20.0	18.5	93.3	22.95	90.7	22.04	87.7	20.86	84.3	20.03	79.8	18.91	73.2	17.20
	24.0	20.5	93.3	22.84	90.7	21.94	87.7	20.76	84.3	19.94	79.8	18.82	73.2	17.12
100%	-19.8	-20.0	52.0	22.37	51.9	23.36	51.8	23.78	51.5	24.36	51.4	24.85	51.2	25.93
	-18.8	-19.0	52.4	22.53	52.3	23.39	52.2	23.89	52.0	24.35	51.9	24.96	51.6	25.87
	-16.7	-17.0	53.3	22.67	53.3	23.63	53.1	23.93	52.9	24.35	52.7	24.89	52.5	25.75
	-13.7	-15.0	54.3	22.77	54.3	23.67	54.1	23.93	53.8	24.45	53.6	24.83	53.3	25.71
	-11.8	-13.0	55.2	22.90	55.1	23.59	54.9	23.91	54.7	24.28	54.4	23.78	54.4	25.57
	-9.8	-11.0	58.2	23.68	58.1	24.45	57.9	24.62	57.9	25.12	57.5	25.47	57.1	26.11
	-9.5	-10.0	60.9	24.50	60.7	25.25	60.6	25.46	60.6	26.01	60.1	26.25	58.1	26.28
	-8.5	-9.1	61.3	24.43	61.2	25.10	61.0	25.35	61.0	25.78	60.5	26.12	59.5	26.47
	-7.0	-7.6	61.9	24.29	61.9	24.97	61.8	25.20	61.7	25.60	61.7	26.01	61.6	26.84
	-5.0	-5.6	65.7	25.10	65.5	25.73	65.4	25.89	65.2	26.32	64.8	26.54	64.8	27.27
	-3.0	-3.7	70.6	26.33	70.4	26.86	70.2	27.05	69.9	27.32	68.7	27.21	67.2	26.72
	0.0	-0.7	73.7	26.29	73.7	26.81	73.7	27.01	73.1	26.90	70.2	25.69	67.2	24.31
	3.0	2.2	81.3	27.62	80.9	28.06	78.4	26.35	75.5	25.27	72.5	24.17	67.2	22.13
	5.0	4.1	86.6	28.49	84.0	27.35	79.2	25.06	76.3	24.06	72.5	22.77	67.2	20.88
	7.0	6.0	86.6	26.88	84.0	25.71	82.5	21.80	76.3	22.67	72.5	21.46	67.2	19.68
	9.0	7.9	86.6	25.26	84.0	24.19	82.5	23.00	76.3	21.36	72.5	20.23	67.2	18.58
	11.0	9.8	86.6	23.78	84.0	22.80	82.5	21.72	76.3	20.15	72.5	19.09	67.2	17.56
	13.0	11.8	86.6	22.34	84.0	21.44	82.5	20.47	76.3	19.00	72.5	18.01	67.2	16.57
	15.0	13.7	86.6	21.07	84.0	20.23	82.5	19.35	76.3	17.97	72.5	17.03	67.2	15.71
	18.0	16.8	86.6	21.01	84.0	20.18	82.5	19.30	76.3	17.92	72.5	16.98	67.2	15.67
	20.0	18.5	86.6	20.94	84.0	20.10	82.5	19.23	76.3	17.86	72.5	16.92	67.2	15.61
	24.0	20.5	86.6	20.84	84.0	20.01	82.5	19.15	76.3	17.78	72.5	16.85	67.2	15.54

TC—Total capacity of outdoor unit; PI—Power input of outdoor unit														
Connection ratio	Outdoor air temp.（℃）		Indoor air temp.（℃ DB）											
			16		18		20		21		22		24	
			TC	PI	TC	PI	TC	PI	TC	PI	TC	PI	TC	PI
	℃ DB	℃ WB	kW	kW	kW	kW	kW	kW	kW	kW	kW	kW	kW	kW
90%	-19.8	-20.0	51.9	24.10	51.8	24.99	51.6	25.25	51.4	25.79	51.3	26.30	51.2	27.18
	-18.8	-19.0	67.9	31.41	67.7	32.44	67.7	32.93	67.7	33.62	67.7	34.28	63.4	33.40
	-16.7	-17.0	69.0	31.50	68.9	32.58	68.9	32.87	68.9	33.54	68.8	34.30	63.4	32.68
	-13.7	-15.0	70.3	31.50	70.2	32.56	70.1	32.75	70.1	33.21	69.4	33.79	63.6	31.94
	-11.8	-13.0	71.3	31.46	71.3	32.31	71.2	32.60	71.2	33.20	69.4	32.92	63.6	31.19
	-9.8	-11.0	72.5	31.23	72.5	32.02	72.4	32.27	72.2	32.75	69.5	32.06	63.7	30.33
	-9.5	-10.0	73.1	31.08	73.1	31.99	72.9	32.06	72.3	32.44	69.5	31.71	63.7	29.83
	-8.5	-9.1	73.7	31.01	73.5	31.70	73.5	31.95	72.3	31.92	69.5	31.19	63.7	29.31
	-7.0	-7.6	74.4	30.73	74.2	31.36	74.2	31.61	72.2	31.20	69.4	30.45	63.6	27.94
	-5.0	-5.6	79.0	31.65	78.9	32.38	74.5	30.66	71.7	29.95	69.0	28.87	63.2	26.12
	-3.0	-3.7	80.0	31.18	80.0	28.33	74.5	29.53	71.7	28.40	69.0	27.20	63.2	24.63
	0.0	-0.7	81.6	30.20	80.1	26.47	74.5	26.84	71.7	25.82	69.0	24.74	63.2	22.41
	3.0	2.2	84.0	28.78	80.1	27.06	74.5	24.48	71.7	23.58	69.0	22.59	63.2	20.51
	5.0	4.1	85.7	27.61	80.1	25.46	74.5	23.09	71.7	22.22	69.0	21.33	63.2	19.35
	7.0	6.0	85.7	25.96	80.1	23.99	74.5	21.77	71.7	20.98	69.0	20.12	63.2	18.28
	9.0	7.9	85.7	24.47	80.1	22.58	74.5	20.54	71.7	19.81	69.0	19.01	63.2	17.28
	11.0	9.8	85.7	23.05	80.1	21.30	74.5	19.43	71.7	18.73	69.0	17.97	63.2	16.37
	13.0	11.8	85.7	21.69	80.1	20.09	74.5	18.32	71.7	17.68	69.0	16.98	63.2	15.47
	15.0	13.7	85.7	20.50	80.1	18.98	74.5	17.37	71.7	16.70	69.0	16.09	63.2	14.68
	18.0	16.8	85.7	20.45	80.1	18.93	74.5	17.32	71.7	16.65	69.0	16.05	63.2	14.64
	20.0	18.5	85.7	20.37	80.1	18.86	74.5	17.26	71.7	16.60	69.0	16.00	63.2	14.59
	24.0	20.5	85.7	20.28	80.1	18.78	74.5	17.19	71.7	16.52	69.0	15.93	63.2	14.53
80%	-19.8	-20.0	51.7	25.80	51.6	26.64	51.4	26.68	51.3	27.13	51.2	27.71	51.0	28.46
	-18.8	-19.0	67.6	33.55	67.6	34.51	66.5	34.24	64.0	33.58	61.5	32.86	56.4	31.25
	-16.7	-17.0	68.8	33.51	68.7	34.53	66.5	33.56	64.0	32.86	61.6	32.15	56.5	30.49
	-13.7	-15.0	70.1	33.43	70.0	34.33	66.7	32.81	64.2	32.08	61.7	31.52	56.6	29.73
	-11.8	-13.0	71.2	33.27	71.1	33.99	66.7	32.06	64.2	31.34	61.7	30.64	56.6	28.33
	-9.8	-11.0	72.4	32.91	71.8	33.37	66.8	31.19	64.3	30.45	61.8	29.60	56.7	26.81
	-9.5	-10.0	73.0	32.69	71.9	32.99	66.8	30.68	64.3	29.98	61.8	28.76	56.7	26.04
	-8.5	-9.1	73.4	32.52	71.9	32.49	66.8	30.30	64.3	29.25	61.8	28.00	56.7	25.35
	-7.0	-7.6	74.1	32.16	71.7	31.71	66.7	29.07	64.2	27.87	61.7	26.72	56.6	24.30
	-5.0	-5.6	76.3	28.50	71.3	30.23	66.3	27.18	63.8	26.08	61.4	24.99	56.3	22.66
	-3.0	-3.7	76.3	27.56	71.3	28.46	66.3	25.61	63.8	24.70	61.4	23.57	56.3	21.42
	0.0	-0.7	76.3	28.02	71.3	25.83	66.3	23.35	63.8	22.43	61.4	21.49	56.3	19.54
	3.0	2.2	76.3	25.54	71.3	23.57	66.3	21.37	63.8	20.51	61.4	19.69	56.3	17.92
	5.0	4.1	76.3	24.04	71.3	22.22	66.3	20.17	63.8	19.37	61.4	18.62	56.3	16.95
	7.0	6.0	76.3	22.65	71.3	21.01	66.3	19.06	63.8	18.33	61.4	17.61	56.3	16.04
	9.0	7.9	76.3	21.39	71.3	19.79	66.3	18.11	63.8	17.32	61.4	16.66	56.3	15.20
	11.0	9.8	76.3	20.19	71.3	18.71	66.3	17.06	63.8	16.40	61.4	15.77	56.3	14.42
	13.0	11.8	76.3	19.03	71.3	17.65	66.3	16.14	63.8	15.51	61.4	14.92	56.3	13.63
	15.0	13.7	76.3	18.00	71.3	16.73	66.3	15.31	63.8	14.71	61.4	14.15	56.3	12.97
	18.0	16.8	76.3	17.95	71.3	16.69	66.3	15.28	63.8	14.68	61.4	14.12	56.3	12.94
	20.0	18.5	76.3	17.89	71.3	16.63	66.3	15.22	63.8	14.63	61.4	14.07	56.3	12.90
	24.0	20.5	76.3	17.81	71.3	16.56	66.3	15.16	63.8	14.56	61.4	14.01	56.3	12.84

GMV X DC Inverter VRF Units

TC—Total capacity of outdoor unit; PI—Power input of outdoor unit														
Connection ratio	Outdoor air temp.（℃）		Indoor air temp.（℃ DB）											
			16		18		20		21		22		24	
			TC	PI	TC	PI	TC	PI	TC	PI	TC	PI	TC	PI
	℃ DB	℃ WB	kW	kW	kW	kW	kW	kW	kW	kW	kW	kW	kW	kW
70%	-19.8	-20.0	51.5	27.49	51.3	28.19	51.1	28.05	50.8	28.32	50.1	28.44	48.6	28.14
	-18.8	-19.0	67.0	35.57	62.7	34.00	58.3	31.71	56.1	31.02	53.9	30.29	49.4	27.99
	-16.7	-17.0	67.1	34.80	62.7	33.25	58.3	30.98	56.2	30.29	53.9	29.48	49.4	26.73
	-13.7	-15.0	67.2	34.00	62.8	32.59	58.4	30.23	56.3	3.31	54.0	28.09	49.5	25.47
	-11.8	-13.0	67.2	33.20	62.8	31.63	58.4	28.85	56.3	27.83	54.0	26.64	49.5	24.16
	-9.8	-11.0	67.3	32.24	62.9	30.47	58.5	27.33	56.3	26.36	54.1	25.23	49.6	22.91
	-9.5	-10.0	67.4	31.74	63.0	29.59	58.6	26.56	56.4	25.61	54.1	24.55	49.6	22.29
	-8.5	-9.1	67.4	31.27	63.0	28.80	58.6	25.87	56.4	24.95	54.1	23.91	49.6	21.72
	-7.0	-7.6	67.2	29.81	62.8	27.46	58.4	24.72	56.3	23.86	54.0	22.85	49.5	20.77
	-5.0	-5.6	66.8	27.84	62.5	25.69	58.1	23.16	55.9	22.33	53.7	21.39	49.2	19.49
	-3.0	-3.7	66.8	26.21	62.5	24.21	58.1	21.88	55.9	21.10	53.7	20.23	49.2	18.43
	0.0	-0.7	66.8	23.86	62.5	22.17	58.1	19.99	55.9	19.30	53.7	18.52	49.2	16.89
	3.0	2.2	66.8	21.80	62.5	20.22	58.1	18.35	55.9	17.71	53.7	17.00	49.2	15.52
	5.0	4.1	66.8	20.58	62.5	19.06	58.1	17.38	55.9	16.76	53.7	16.11	49.2	14.70
	7.0	6.0	66.8	19.45	62.5	18.04	58.1	16.43	55.9	15.87	53.7	15.26	49.2	13.95
	9.0	7.9	66.8	18.39	62.5	17.05	58.1	15.57	55.9	15.05	53.7	14.46	49.2	13.23
	11.0	9.8	66.8	17.39	62.5	16.13	58.1	14.78	55.9	14.28	53.7	13.73	49.2	12.57
	13.0	11.8	66.8	16.43	62.5	15.28	58.1	13.98	55.9	13.55	53.7	13.00	49.2	11.94
	15.0	13.7	66.8	15.57	62.5	14.49	58.1	13.28	55.9	12.88	53.7	12.37	49.2	11.37
	18.0	16.8	66.8	15.53	62.5	14.46	58.1	13.25	55.9	12.85	53.7	12.33	49.2	11.34
	20.0	18.5	66.8	15.47	62.5	14.41	58.1	13.21	55.9	12.80	53.7	12.29	49.2	11.30
	24.0	20.5	66.8	15.41	62.5	14.34	58.1	13.15	55.9	12.75	53.7	12.24	49.2	11.25
60%	-19.8	-20.0	52.0	29.60	49.5	28.85	46.5	26.35	45.1	25.50	43.2	24.42	39.7	22.17
	-18.8	-19.0	57.6	32.50	53.7	30.87	49.9	27.73	48.1	26.64	46.3	25.56	42.3	23.16
	-16.7	-17.0	57.6	31.69	53.8	29.63	50.0	26.51	48.1	25.48	46.3	24.46	42.4	22.18
	-13.7	-15.0	57.7	30.68	53.9	28.20	50.1	25.29	48.2	24.30	46.4	23.34	42.5	21.16
	-11.8	-13.0	57.7	29.04	53.9	26.71	50.1	24.00	48.2	23.08	46.4	22.17	42.5	20.13
	-9.8	-11.0	57.8	27.47	53.9	25.29	50.2	22.78	48.3	21.88	46.5	21.04	42.5	19.13
	-9.5	-10.0	57.8	26.71	54.0	24.61	50.2	22.16	48.3	21.33	46.5	20.48	42.6	18.60
	-8.5	-9.1	57.8	26.01	54.0	23.98	50.2	21.63	48.3	20.79	46.5	19.97	42.6	18.16
	-7.0	-7.6	57.7	24.82	53.9	22.91	50.1	20.67	48.2	19.90	46.4	19.11	42.5	17.41
	-5.0	-5.6	57.4	23.24	53.5	21.46	49.8	19.42	47.9	18.68	46.1	17.95	42.2	16.37
	-3.0	-3.7	57.4	21.95	53.5	20.27	49.8	18.45	47.9	17.70	46.1	17.01	42.2	15.50
	0.0	-0.7	57.4	20.05	53.5	18.56	49.8	16.87	47.9	16.25	46.1	15.62	42.2	14.25
	3.0	2.2	57.4	18.38	53.5	17.05	49.8	15.54	47.9	14.95	46.1	14.41	42.2	13.15
	5.0	4.1	57.4	17.39	53.5	16.13	49.8	14.72	47.9	14.19	46.1	13.65	42.2	12.50
	7.0	6.0	57.4	16.45	53.5	15.28	49.8	13.96	47.9	13.47	46.1	12.99	42.2	11.87
	9.0	7.9	57.4	15.59	53.5	14.49	49.8	13.26	47.9	12.80	46.1	12.32	42.2	11.31
	11.0	9.8	57.4	14.79	53.5	13.76	49.8	12.62	47.9	12.16	46.1	11.72	42.2	10.77
	13.0	11.8	57.4	13.99	53.5	13.04	49.8	11.99	47.9	11.56	46.1	11.14	42.2	10.24
	15.0	13.7	57.4	13.32	53.5	12.38	49.8	11.41	47.9	11.02	46.1	10.63	42.2	9.77
	18.0	16.8	57.4	13.29	53.5	12.35	49.8	11.38	47.9	10.99	46.1	10.61	42.2	9.74
	20.0	18.5	57.4	13.24	53.5	12.31	49.8	11.35	47.9	10.95	46.1	10.57	42.2	9.71
	24.0	20.5	57.4	13.19	53.5	12.25	49.8	11.30	47.9	10.91	46.1	10.53	42.2	9.67

TC—Total capacity of outdoor unit; PI—Power input of outdoor unit														
Connection ratio	Outdoor air temp.（℃）		Indoor air temp.（℃ DB）											
			16		18		20		21		22		24	
			TC	PI	TC	PI	TC	PI	TC	PI	TC	PI	TC	PI
	℃ DB	℃ WB	kW	kW	kW	kW	kW	kW	kW	kW	kW	kW	kW	kW
50%	-19.8	-20.0	44.2	25.35	41.6	23.53	38.5	20.97	37.3	20.46	35.7	19.55	33.6	18.31
	-18.8	-19.0	47.9	26.89	44.8	24.82	41.7	22.29	40.2	21.55	38.6	20.68	35.4	18.89
	-16.7	-17.0	48.0	25.68	44.9	23.72	41.8	21.35	40.2	20.66	38.6	19.85	35.4	18.12
	-13.7	-15.0	48.1	24.50	45.0	22.65	41.8	20.39	40.3	19.76	38.7	18.97	35.5	17.34
	-11.8	-13.0	48.1	23.27	45.0	21.56	41.8	19.42	40.3	18.81	38.7	18.05	35.5	16.52
	-9.8	-11.0	48.2	22.07	45.0	20.43	41.9	18.47	40.3	17.88	38.7	17.19	35.6	15.73
	-9.5	-10.0	48.2	21.48	45.1	19.88	41.9	18.01	40.4	17.45	38.8	16.75	35.6	15.32
	-8.5	-9.1	48.2	20.94	45.1	19.41	41.9	17.57	40.4	17.03	38.8	16.37	35.6	14.97
	-7.0	-7.6	48.1	20.03	45.0	18.65	41.8	16.84	40.3	16.33	38.7	15.70	35.5	14.38
	-5.0	-5.6	47.8	18.79	44.7	17.46	41.6	15.86	40.0	15.38	38.4	14.79	35.3	13.54
	-3.0	-3.7	47.8	17.79	44.7	16.54	41.6	15.04	40.0	14.59	38.4	14.03	35.3	12.88
	0.0	-0.7	47.8	16.33	44.7	15.19	41.6	13.88	40.0	13.45	38.4	12.95	35.3	11.90
	3.0	2.2	47.8	15.04	44.7	14.01	41.6	12.80	40.0	12.43	38.4	11.99	35.3	11.02
	5.0	4.1	47.8	14.27	44.7	13.28	41.6	12.17	40.0	11.83	38.4	11.39	35.3	10.49
	7.0	6.0	47.8	13.54	44.7	12.63	41.6	11.60	40.0	11.25	38.4	10.85	35.3	10.01
	9.0	7.9	47.8	12.85	44.7	12.00	41.6	11.03	40.0	10.74	38.4	10.34	35.3	9.54
	11.0	9.8	47.8	12.22	44.7	11.41	41.6	10.52	40.0	10.23	38.4	9.86	35.3	9.10
	13.0	11.8	47.8	11.62	44.7	10.85	41.6	10.01	40.0	9.75	38.4	9.38	35.3	8.69
	15.0	13.7	47.8	11.06	44.7	10.36	41.6	9.57	40.0	9.30	38.4	8.97	35.3	8.28
	18.0	16.8	47.8	11.03	44.7	10.33	41.6	9.54	40.0	9.28	38.4	8.94	35.3	8.26
	20.0	18.5	47.8	10.99	44.7	10.30	41.6	9.51	40.0	9.25	38.4	8.91	35.3	8.23
	24.0	20.5	47.8	10.94	44.7	10.25	41.6	9.47	40.0	9.21	38.4	8.87	35.3	8.19

GMV-785WM/B-X(P)

TC—Total capacity of outdoor unit; PI—Power input of outdoor unit														
Connection ratio	Outdoor air temp.（℃）		Indoor air temp.（℃ DB）											
			16		18		20		21		22		24	
			TC	PI	TC	PI	TC	PI	TC	PI	TC	PI	TC	PI
	℃ DB	℃ WB	kW	kW	kW	kW	kW	kW	kW	kW	kW	kW	kW	kW
135%	-19.8	-20.0	55.7	19.31	55.6	20.71	55.4	21.77	55.4	22.47	55.2	23.28	55.1	24.68
	-18.8	-19.0	56.2	19.63	56.1	21.02	55.9	21.92	55.7	22.66	55.6	23.32	55.5	24.83
	-16.7	-17.0	57.3	20.14	57.1	21.41	56.9	22.34	56.6	22.83	56.6	23.61	56.4	24.99
	-13.7	-15.0	58.3	20.58	58.2	21.81	58.0	22.64	57.8	23.20	57.6	23.94	57.5	25.15
	-11.8	-13.0	59.2	20.98	59.1	22.05	58.8	22.78	58.8	23.48	58.7	24.08	58.5	25.26
	-9.8	-11.0	62.4	22.08	62.3	23.16	61.9	23.78	61.5	24.25	61.2	24.71	60.7	25.75
	-9.5	-10.0	63.9	22.53	63.5	23.47	63.0	24.03	62.7	24.49	62.5	25.07	62.2	26.07
	-8.5	-9.1	65.5	23.04	64.7	23.83	64.3	24.29	63.8	24.77	63.6	25.25	63.4	26.35
	-7.0	-7.6	66.5	23.25	66.4	24.15	66.2	24.73	66.1	25.27	65.9	25.81	65.7	26.88
	-5.0	-5.6	71.2	24.52	70.7	24.86	70.0	25.72	69.8	26.17	69.4	26.64	69.2	27.54
	-3.0	-3.7	74.2	25.22	73.4	25.91	73.2	26.28	73.0	26.82	72.7	27.24	72.5	28.18
	0.0	-0.7	80.0	26.40	78.9	26.85	78.7	27.25	78.7	27.72	78.3	28.19	78.3	29.06
	3.0	2.2	87.2	27.76	86.7	28.45	85.1	28.37	84.8	28.68	84.8	29.15	84.5	29.96
	5.0	4.1	90.5	28.13	90.1	28.82	89.7	28.97	89.3	29.37	89.1	29.74	88.8	30.47
	7.0	6.0	94.9	28.76	94.7	29.42	94.1	29.53	93.7	26.67	93.7	30.28	90.6	29.39
	9.0	7.9	99.5	29.28	99.2	29.90	98.8	30.03	98.6	30.44	96.7	29.93	90.6	27.62
	11.0	9.8	104.1	29.73	103.9	30.32	103.5	30.38	100.1	29.29	96.8	28.16	90.6	26.02
	13.0	11.8	109.6	30.28	109.3	30.86	103.9	28.59	100.1	27.46	96.8	26.44	90.6	24.42
	15.0	13.7	114.8	30.79	110.4	29.37	103.9	26.95	100.1	25.91	96.8	24.92	90.6	23.05
	18.0	16.8	114.8	30.71	110.4	29.29	103.9	26.88	100.1	25.84	96.8	24.85	90.6	22.99
	20.0	18.5	114.8	30.59	110.4	29.18	103.9	26.78	100.1	25.75	96.8	24.76	90.6	22.91
	24.0	20.5	114.8	30.44	110.4	29.04	103.9	26.66	100.1	25.63	96.8	24.65	90.6	22.80
120%	-19.8	-20.0	55.6	21.22	55.5	22.52	55.3	23.41	55.1	23.99	55.0	24.68	54.9	26.12
	-18.8	-19.0	56.1	21.48	56.0	22.78	55.8	23.27	55.6	24.20	55.4	24.84	55.4	26.26
	-16.7	-17.0	57.1	21.86	57.0	23.09	56.8	23.73	56.5	24.40	56.5	25.07	56.3	26.29
	-13.7	-15.0	58.1	22.19	58.0	23.32	57.8	24.01	57.5	24.55	57.6	25.19	57.4	26.42
	-11.8	-13.0	59.0	22.48	58.9	23.49	58.7	24.11	58.6	24.64	58.5	25.31	58.4	26.36
	-9.8	-11.0	62.3	23.56	62.1	24.54	61.7	24.91	61.5	25.54	61.2	25.94	60.6	26.91
	-9.5	-10.0	63.7	23.93	63.3	24.81	62.8	25.22	62.5	25.65	62.1	25.86	62.1	27.19
	-8.5	-9.1	65.1	24.33	64.5	25.13	64.2	25.49	63.7	25.94	63.5	26.42	63.3	27.43
	-7.0	-7.6	66.4	24.61	66.2	25.41	65.9	25.82	65.8	26.34	65.8	26.92	65.5	27.80
	-5.0	-5.6	71.1	25.80	70.6	26.57	70.0	26.86	69.8	27.29	69.4	27.66	69.1	28.53
	-3.0	-3.7	73.4	26.22	73.1	26.90	72.6	27.18	72.5	27.61	72.4	28.17	72.3	28.99
	0.0	-0.7	79.8	27.53	78.7	27.90	78.3	28.49	78.3	28.61	78.2	29.11	78.1	29.90
	3.0	2.2	86.8	28.76	86.4	29.39	85.0	29.19	84.8	29.63	84.5	29.96	83.7	30.24
	5.0	4.1	90.2	29.10	89.9	29.72	89.6	29.84	89.3	30.26	89.1	30.59	83.5	28.33
	7.0	6.0	94.7	29.66	94.0	30.06	93.9	30.31	93.2	30.24	88.9	28.67	83.0	26.52
	9.0	7.9	99.3	30.18	98.7	30.66	95.9	29.40	93.6	28.53	88.9	26.97	83.0	24.97
	11.0	9.8	103.9	30.56	101.2	29.99	97.1	28.01	93.8	26.94	88.9	25.39	83.0	23.54
	13.0	11.8	107.5	30.23	101.2	28.13	97.1	26.29	93.8	25.31	88.9	23.88	83.0	22.14
	15.0	13.7	107.5	28.46	101.2	26.50	97.1	24.82	93.8	23.87	88.9	22.53	83.0	20.90
	18.0	16.8	107.5	28.39	101.2	26.42	97.1	24.76	93.8	23.80	88.9	22.47	83.0	20.85
	20.0	18.5	107.5	28.28	101.2	26.33	97.1	24.67	93.8	23.72	88.9	22.39	83.0	20.78
	24.0	20.5	107.5	28.15	101.2	26.20	97.1	24.55	93.8	23.61	88.9	22.29	83.0	20.68

TC—Total capacity of outdoor unit; PI—Power input of outdoor unit														
Connection ratio	Outdoor air temp.（℃）		Indoor air temp.（℃ DB）											
			16		18		20		21		22		24	
			TC	PI	TC	PI	TC	PI	TC	PI	TC	PI	TC	PI
	℃ DB	℃ WB	kW	kW	kW	kW	kW	kW	kW	kW	kW	kW	kW	kW
110%	-19.8	-20.0	55.4	23.14	55.4	24.33	55.2	25.06	55.1	25.69	55.0	26.30	54.9	27.65
	-18.8	-19.0	56.0	23.35	55.9	24.43	55.7	25.11	55.5	25.65	55.2	26.33	55.2	27.53
	-16.7	-17.0	56.9	23.62	56.8	24.75	56.6	25.25	56.4	25.87	56.3	26.50	56.2	27.67
	-13.7	-15.0	57.9	23.84	57.8	24.91	57.6	25.44	57.4	25.93	57.4	26.52	57.3	27.71
	-11.8	-13.0	58.8	24.05	58.7	24.92	58.5	25.40	58.4	25.88	58.4	26.54	58.2	27.54
	-9.8	-11.0	62.1	25.00	61.9	25.92	61.8	26.30	61.8	26.95	61.2	27.20	61.0	28.13
	-9.5	-10.0	63.4	25.29	64.7	26.81	64.6	27.31	64.6	27.83	63.9	28.08	62.3	28.41
	-8.5	-9.1	65.0	25.75	65.3	26.86	65.1	27.17	65.1	27.68	64.3	27.98	63.5	28.55
	-7.0	-7.6	66.2	25.93	66.1	26.67	65.9	27.04	65.9	27.54	65.1	27.37	64.7	28.53
	-5.0	-5.6	70.9	27.12	70.8	27.93	70.6	28.24	70.5	28.72	69.5	27.52	69.4	29.76
	-3.0	-3.7	73.3	27.45	75.9	29.17	75.8	29.53	75.8	29.99	74.7	27.83	73.5	30.51
	0.0	-0.7	79.6	28.63	78.6	28.96	78.1	29.09	81.0	30.60	79.7	29.36	77.6	30.15
	3.0	2.2	86.7	29.85	87.9	30.97	87.6	31.07	86.7	31.23	83.8	30.05	77.6	27.45
	5.0	4.1	89.9	30.03	96.2	32.78	90.2	30.61	88.8	30.07	84.6	28.52	77.6	25.83
	7.0	6.0	94.5	30.59	96.2	31.59	92.8	29.61	89.4	28.46	84.6	26.82	77.6	24.31
	9.0	7.9	98.9	30.97	96.2	29.69	93.0	27.95	89.5	26.82	84.6	25.25	77.6	22.93
	11.0	9.8	98.9	29.13	96.2	27.93	93.0	26.32	89.5	25.29	84.6	23.82	77.6	21.64
	13.0	11.8	98.9	27.32	96.2	26.21	93.0	24.76	89.5	23.79	84.6	22.41	77.6	20.38
	15.0	13.7	98.9	25.74	96.2	24.72	93.0	23.39	89.5	22.46	84.6	21.21	77.6	19.29
	18.0	16.8	98.9	25.67	96.2	24.65	93.0	23.33	89.5	22.41	84.6	21.15	77.6	19.24
	20.0	18.5	98.9	25.58	96.2	24.56	93.0	23.25	89.5	22.33	84.6	21.08	77.6	19.17
	24.0	20.5	98.9	25.46	96.2	24.45	93.0	23.15	89.5	22.23	84.6	20.98	77.6	19.09
100%	-19.8	-20.0	55.1	24.94	55.0	26.04	54.9	26.50	54.7	27.15	54.6	27.70	54.3	28.90
	-18.8	-19.0	55.6	25.11	55.5	26.07	55.4	26.63	55.2	27.14	55.0	27.83	54.8	28.84
	-16.7	-17.0	56.6	25.27	56.5	26.34	56.3	26.67	56.1	27.14	55.9	27.75	55.6	28.70
	-13.7	-15.0	57.6	25.38	57.5	26.39	57.3	26.68	57.1	27.26	56.9	27.68	56.5	28.66
	-11.8	-13.0	58.5	25.53	58.4	26.29	58.2	26.65	58.0	27.06	57.7	26.51	57.6	28.51
	-9.8	-11.0	61.8	26.40	61.6	27.25	61.4	27.44	61.5	28.00	61.0	28.39	60.6	29.10
	-9.5	-10.0	64.6	27.31	64.4	28.15	64.3	28.38	64.3	28.99	63.7	29.26	61.6	29.29
	-8.5	-9.1	65.0	27.23	64.9	27.98	64.7	28.25	64.7	28.74	64.1	29.11	63.1	29.51
	-7.0	-7.6	65.6	27.07	65.7	27.83	65.5	28.09	65.4	28.53	65.4	28.99	65.3	29.92
	-5.0	-5.6	69.7	27.98	69.5	28.69	69.4	28.86	69.2	29.34	68.8	29.59	68.7	30.40
	-3.0	-3.7	74.9	29.35	74.7	29.94	74.5	30.15	74.2	30.45	72.8	30.33	71.3	29.79
	0.0	-0.7	78.1	29.31	78.1	29.88	78.1	30.10	77.5	29.98	74.4	28.63	71.3	27.10
	3.0	2.2	86.3	30.79	85.8	31.28	83.1	29.37	80.1	28.17	76.9	26.94	71.3	24.67
	5.0	4.1	91.8	31.76	89.1	30.49	84.0	27.94	80.9	26.81	76.9	25.38	71.3	23.27
	7.0	6.0	91.8	29.97	89.1	28.66	87.5	24.30	80.9	25.26	76.9	23.92	71.3	21.94
	9.0	7.9	91.8	28.15	89.1	26.97	87.5	25.63	80.9	23.81	76.9	22.55	71.3	20.71
	11.0	9.8	91.8	26.51	89.1	25.41	87.5	24.21	80.9	22.46	76.9	21.28	71.3	19.58
	13.0	11.8	91.8	24.90	89.1	23.90	87.5	22.82	80.9	21.18	76.9	20.08	71.3	18.47
	15.0	13.7	91.8	23.49	89.1	22.55	87.5	21.57	80.9	20.03	76.9	18.98	71.3	17.51
	18.0	16.8	91.8	23.42	89.1	22.49	87.5	21.51	80.9	19.98	76.9	18.93	71.3	17.46
	20.0	18.5	91.8	23.34	89.1	22.41	87.5	21.44	80.9	19.91	76.9	18.86	71.3	17.40
	24.0	20.5	91.8	23.23	89.1	22.31	87.5	21.34	80.9	19.82	76.9	18.78	71.3	17.32

GMV X DC Inverter VRF Units

TC—Total capacity of outdoor unit; PI—Power input of outdoor unit														
Connection ratio	Outdoor air temp.（℃）		Indoor air temp.（℃ DB）											
			16		18		20		21		22		24	
			TC	PI	TC	PI	TC	PI	TC	PI	TC	PI	TC	PI
	℃ DB	℃ WB	kW	kW	kW	kW	kW	kW	kW	kW	kW	kW	kW	kW
90%	-19.8	-20.0	55.0	26.86	54.9	27.86	54.8	28.15	54.6	28.75	54.4	29.31	54.3	30.30
	-18.8	-19.0	72.0	35.01	71.8	36.16	71.8	36.71	71.8	37.47	71.8	38.21	67.2	37.23
	-16.7	-17.0	73.2	35.11	73.1	36.32	73.0	36.64	73.1	37.38	73.0	38.24	67.3	36.43
	-13.7	-15.0	74.5	35.11	74.5	36.29	74.3	36.51	74.4	37.02	73.6	37.67	67.4	35.60
	-11.8	-13.0	75.7	35.07	75.6	36.02	75.5	36.34	75.5	37.01	73.6	36.69	67.4	34.77
	-9.8	-11.0	76.9	34.81	76.9	35.69	76.7	35.97	76.5	36.51	73.7	35.74	67.5	33.81
	-9.5	-10.0	77.6	34.64	77.5	35.66	77.4	35.74	76.7	36.16	73.8	35.34	67.5	33.25
	-8.5	-9.1	78.1	34.57	78.0	35.34	77.9	35.61	76.7	35.58	73.8	34.77	67.5	32.67
	-7.0	-7.6	78.9	34.25	78.7	34.96	78.7	35.23	76.6	34.78	73.6	33.94	67.4	31.14
	-5.0	-5.6	83.8	35.28	83.7	36.09	79.0	34.18	76.1	33.39	73.2	32.18	67.0	29.12
	-3.0	-3.7	84.8	34.75	84.8	31.58	79.0	32.92	76.1	31.66	73.2	30.32	67.0	27.45
	0.0	-0.7	86.6	33.66	84.9	29.51	79.0	29.91	76.1	28.78	73.2	27.58	67.0	24.98
	3.0	2.2	89.1	32.08	84.9	30.17	79.0	27.29	76.1	26.28	73.2	25.18	67.0	22.86
	5.0	4.1	90.9	30.78	84.9	28.38	79.0	25.74	76.1	24.77	73.2	23.77	67.0	21.57
	7.0	6.0	90.9	28.94	84.9	26.74	79.0	24.27	76.1	23.39	73.2	22.43	67.0	20.38
	9.0	7.9	90.9	27.28	84.9	25.17	79.0	22.89	76.1	22.08	73.2	21.19	67.0	19.26
	11.0	9.8	90.9	25.69	84.9	23.74	79.0	21.66	76.1	20.88	73.2	20.03	67.0	18.25
	13.0	11.8	90.9	24.18	84.9	22.39	79.0	20.42	76.1	19.71	73.2	18.93	67.0	17.24
	15.0	13.7	90.9	22.85	84.9	21.15	79.0	19.36	76.1	18.61	73.2	17.94	67.0	16.36
	18.0	16.8	90.9	22.79	84.9	21.10	79.0	19.31	76.1	18.56	73.2	17.89	67.0	16.32
	20.0	18.5	90.9	22.71	84.9	21.02	79.0	19.24	76.1	18.50	73.2	17.83	67.0	16.27
	24.0	20.5	90.9	22.61	84.9	20.93	79.0	19.16	76.1	18.42	73.2	17.75	67.0	16.20
80%	-19.8	-20.0	54.8	28.75	54.8	29.70	54.6	29.74	54.4	30.24	54.3	30.89	54.1	31.72
	-18.8	-19.0	71.7	37.40	71.7	38.47	70.5	38.17	67.9	37.43	65.3	36.63	59.8	34.84
	-16.7	-17.0	73.0	37.36	72.9	38.49	70.6	37.41	67.9	36.63	65.3	35.84	59.9	33.98
	-13.7	-15.0	74.4	37.27	74.2	38.27	70.7	36.57	68.1	35.76	65.5	35.14	60.0	33.14
	-11.8	-13.0	75.5	37.08	75.4	37.89	70.7	35.74	68.1	34.93	65.5	34.16	60.0	31.58
	-9.8	-11.0	76.8	36.68	76.2	37.20	70.8	34.76	68.2	33.94	65.6	32.99	60.1	29.89
	-9.5	-10.0	77.4	36.44	76.2	36.78	70.8	34.20	68.2	33.41	65.6	32.06	60.1	29.03
	-8.5	-9.1	77.9	36.25	76.2	36.21	70.8	33.77	68.2	32.61	65.6	31.21	60.1	28.26
	-7.0	-7.6	78.6	35.85	76.1	35.34	70.7	32.40	68.1	31.07	65.5	29.78	60.0	27.09
	-5.0	-5.6	80.9	31.76	75.6	33.70	70.3	30.30	67.7	29.07	65.1	27.85	59.7	25.26
	-3.0	-3.7	80.9	30.72	75.6	31.72	70.3	28.55	67.7	27.53	65.1	26.28	59.7	23.87
	0.0	-0.7	80.9	31.24	75.6	28.79	70.3	26.03	67.7	25.01	65.1	23.96	59.7	21.79
	3.0	2.2	80.9	28.46	75.6	26.27	70.3	23.82	67.7	22.86	65.1	21.95	59.7	19.98
	5.0	4.1	80.9	26.80	75.6	24.77	70.3	22.48	67.7	21.60	65.1	20.76	59.7	18.90
	7.0	6.0	80.9	25.25	75.6	23.41	70.3	21.24	67.7	20.43	65.1	19.63	59.7	17.88
	9.0	7.9	80.9	23.84	75.6	22.06	70.3	20.19	67.7	19.30	65.1	18.57	59.7	16.94
	11.0	9.8	80.9	22.51	75.6	20.85	70.3	19.02	67.7	18.28	65.1	17.58	59.7	16.07
	13.0	11.8	80.9	21.21	75.6	19.68	70.3	17.99	67.7	17.29	65.1	16.63	59.7	15.20
	15.0	13.7	80.9	20.07	75.6	18.65	70.3	17.07	67.7	16.40	65.1	15.78	59.7	14.46
	18.0	16.8	80.9	20.01	75.6	18.61	70.3	17.03	67.7	16.36	65.1	15.74	59.7	14.43
	20.0	18.5	80.9	19.94	75.6	18.54	70.3	16.97	67.7	16.31	65.1	15.68	59.7	14.38
	24.0	20.5	80.9	19.86	75.6	18.46	70.3	16.90	67.7	16.23	65.1	15.62	59.7	14.31

TC—Total capacity of outdoor unit; PI—Power input of outdoor unit														
Connection ratio	Outdoor air temp.（℃）		Indoor air temp.（℃ DB）											
			16		18		20		21		22		24	
			TC	PI	TC	PI	TC	PI	TC	PI	TC	PI	TC	PI
	℃ DB	℃ WB	kW	kW	kW	kW	kW	kW	kW	kW	kW	kW	kW	kW
70%	-19.8	-20.0	54.6	30.65	54.4	31.42	54.2	31.27	53.9	31.57	53.2	31.70	51.6	31.37
	-18.8	-19.0	71.1	39.65	66.5	37.90	61.8	35.35	59.5	34.57	57.1	33.77	52.4	31.20
	-16.7	-17.0	71.2	38.79	66.5	37.06	61.9	34.53	59.6	33.77	57.2	32.86	52.4	29.80
	-13.7	-15.0	71.3	37.90	66.7	36.32	62.0	33.69	59.7	3.69	57.3	31.32	52.5	28.40
	-11.8	-13.0	71.3	37.01	66.7	35.26	62.0	32.16	59.7	31.02	57.3	29.70	52.5	26.93
	-9.8	-11.0	71.4	35.94	66.8	33.96	62.1	30.46	59.8	29.38	57.4	28.12	52.6	25.53
	-9.5	-10.0	71.5	35.38	66.8	32.99	62.1	29.60	59.8	28.55	57.4	27.36	52.6	24.85
	-8.5	-9.1	71.5	34.85	66.8	32.10	62.1	28.83	59.8	27.81	57.4	26.65	52.6	24.21
	-7.0	-7.6	71.3	33.22	66.7	30.60	62.0	27.55	59.7	26.59	57.3	25.47	52.5	23.15
	-5.0	-5.6	70.9	31.03	66.3	28.63	61.6	25.82	59.3	24.89	57.0	23.85	52.2	21.73
	-3.0	-3.7	70.9	29.22	66.3	26.98	61.6	24.39	59.3	23.52	57.0	22.55	52.2	20.54
	0.0	-0.7	70.9	26.60	66.3	24.72	61.6	22.29	59.3	21.51	57.0	20.64	52.2	18.83
	3.0	2.2	70.9	24.30	66.3	22.53	61.6	20.46	59.3	19.75	57.0	18.95	52.2	17.30
	5.0	4.1	70.9	22.94	66.3	21.24	61.6	19.37	59.3	18.69	57.0	17.96	52.2	16.39
	7.0	6.0	70.9	21.68	66.3	20.11	61.6	18.31	59.3	17.69	57.0	17.01	52.2	15.55
	9.0	7.9	70.9	20.50	66.3	19.01	61.6	17.36	59.3	16.77	57.0	16.12	52.2	14.74
	11.0	9.8	70.9	19.39	66.3	17.98	61.6	16.47	59.3	15.92	57.0	15.31	52.2	14.01
	13.0	11.8	70.9	18.31	66.3	17.03	61.6	15.59	59.3	15.10	57.0	14.49	52.2	13.31
	15.0	13.7	70.9	17.35	66.3	16.15	61.6	14.81	59.3	14.36	57.0	13.78	52.2	12.68
	18.0	16.8	70.9	17.31	66.3	16.11	61.6	14.77	59.3	14.32	57.0	13.75	52.2	12.64
	20.0	18.5	70.9	17.25	66.3	16.06	61.6	14.72	59.3	14.27	57.0	13.70	52.2	12.60
	24.0	20.5	70.9	17.17	66.3	15.99	61.6	14.66	59.3	14.21	57.0	13.64	52.2	12.55
60%	-19.8	-20.0	55.1	33.00	52.5	32.16	49.3	29.38	47.8	28.42	45.9	27.22	42.1	24.71
	-18.8	-19.0	61.0	36.23	57.0	34.41	53.0	30.91	51.0	29.69	49.1	28.49	44.9	25.81
	-16.7	-17.0	61.1	35.33	57.0	33.02	53.0	29.55	51.0	28.40	49.1	27.26	45.0	24.73
	-13.7	-15.0	61.2	34.20	57.1	31.43	53.1	28.19	51.1	27.09	49.2	26.02	45.0	23.59
	-11.8	-13.0	61.2	32.37	57.1	29.77	53.1	26.76	51.1	25.73	49.2	24.72	45.0	22.44
	-9.8	-11.0	61.3	30.62	57.2	28.19	53.2	25.40	51.2	24.39	49.3	23.45	45.1	21.32
	-9.5	-10.0	61.3	29.78	57.2	27.43	53.2	24.71	51.2	23.77	49.3	22.82	45.1	20.74
	-8.5	-9.1	61.3	28.99	57.2	26.73	53.2	24.11	51.2	23.17	49.3	22.26	45.1	20.25
	-7.0	-7.6	61.2	27.67	57.1	25.54	53.1	23.04	51.1	22.18	49.2	21.30	45.0	19.40
	-5.0	-5.6	60.9	25.91	56.8	23.92	52.8	21.65	50.8	20.82	48.9	20.01	44.8	18.25
	-3.0	-3.7	60.9	24.46	56.8	22.60	52.8	20.56	50.8	19.73	48.9	18.96	44.8	17.27
	0.0	-0.7	60.9	22.35	56.8	20.69	52.8	18.80	50.8	18.11	48.9	17.41	44.8	15.88
	3.0	2.2	60.9	20.49	56.8	19.01	52.8	17.32	50.8	16.67	48.9	16.07	44.8	14.66
	5.0	4.1	60.9	19.38	56.8	17.98	52.8	16.41	50.8	15.82	48.9	15.22	44.8	13.93
	7.0	6.0	60.9	18.34	56.8	17.03	52.8	15.56	50.8	15.01	48.9	14.48	44.8	13.23
	9.0	7.9	60.9	17.38	56.8	16.15	52.8	14.78	50.8	14.27	48.9	13.73	44.8	12.60
	11.0	9.8	60.9	16.48	56.8	15.34	52.8	14.07	50.8	13.56	48.9	13.06	44.8	12.01
	13.0	11.8	60.9	15.59	56.8	14.53	52.8	13.36	50.8	12.89	48.9	12.42	44.8	11.41
	15.0	13.7	60.9	14.85	56.8	13.80	52.8	12.72	50.8	12.28	48.9	11.85	44.8	10.89
	18.0	16.8	60.9	14.81	56.8	13.77	52.8	12.69	50.8	12.25	48.9	11.82	44.8	10.86
	20.0	18.5	60.9	14.76	56.8	13.72	52.8	12.65	50.8	12.21	48.9	11.78	44.8	10.82
	24.0	20.5	60.9	14.70	56.8	13.66	52.8	12.59	50.8	12.16	48.9	11.73	44.8	10.78

GMV X DC Inverter VRF Units

TC—Total capacity of outdoor unit; PI—Power input of outdoor unit														
Connection ratio	Outdoor air temp.（℃）		Indoor air temp.（℃ DB）											
			16		18		20		21		22		24	
			TC	PI	TC	PI	TC	PI	TC	PI	TC	PI	TC	PI
	℃ DB	℃ WB	kW	kW	kW	kW	kW	kW	kW	kW	kW	kW	kW	kW
50%	-19.8	-20.0	46.9	28.26	44.2	26.23	40.8	23.38	39.6	22.81	37.9	21.79	35.7	20.41
	-18.8	-19.0	50.8	29.97	47.5	27.66	44.2	24.84	42.6	24.02	40.9	23.05	37.5	21.05
	-16.7	-17.0	50.9	28.63	47.6	26.44	44.3	23.79	42.6	23.03	40.9	22.12	37.6	20.20
	-13.7	-15.0	51.0	27.31	47.7	25.24	44.4	22.73	42.7	22.02	41.0	21.14	37.7	19.33
	-11.8	-13.0	51.0	25.94	47.7	24.03	44.4	21.64	42.7	20.96	41.0	20.12	37.7	18.42
	-9.8	-11.0	51.1	24.60	47.8	22.77	44.4	20.59	42.8	19.94	41.1	19.16	37.7	17.53
	-9.5	-10.0	51.1	23.94	47.8	22.16	44.5	20.07	42.8	19.45	41.1	18.67	37.7	17.08
	-8.5	-9.1	51.1	23.34	47.8	21.64	44.5	19.58	42.8	18.99	41.1	18.25	37.7	16.69
	-7.0	-7.6	51.0	22.33	47.7	20.79	44.4	18.77	42.7	18.21	41.0	17.50	37.7	16.03
	-5.0	-5.6	50.7	20.94	47.4	19.46	44.1	17.68	42.5	17.15	40.8	16.48	37.4	15.09
	-3.0	-3.7	50.7	19.83	47.4	18.43	44.1	16.77	42.5	16.27	40.8	15.63	37.4	14.36
	0.0	-0.7	50.7	18.20	47.4	16.93	44.1	15.47	42.5	14.99	40.8	14.43	37.4	13.27
	3.0	2.2	50.7	16.76	47.4	15.61	44.1	14.27	42.5	13.86	40.8	13.37	37.4	12.29
	5.0	4.1	50.7	15.91	47.4	14.81	44.1	13.57	42.5	13.18	40.8	12.70	37.4	11.69
	7.0	6.0	50.7	15.10	47.4	14.08	44.1	12.93	42.5	12.54	40.8	12.09	37.4	11.16
	9.0	7.9	50.7	14.32	47.4	13.38	44.1	12.29	42.5	11.97	40.8	11.52	37.4	10.64
	11.0	9.8	50.7	13.62	47.4	12.72	44.1	11.73	42.5	11.40	40.8	10.99	37.4	10.14
	13.0	11.8	50.7	12.95	47.4	12.10	44.1	11.16	42.5	10.87	40.8	10.46	37.4	9.69
	15.0	13.7	50.7	12.32	47.4	11.55	44.1	10.66	42.5	10.37	40.8	10.00	37.4	9.23
	18.0	16.8	50.7	12.29	47.4	11.52	44.1	10.64	42.5	10.34	40.8	9.97	37.4	9.21
	20.0	18.5	50.7	12.25	47.4	11.48	44.1	10.60	42.5	10.31	40.8	9.94	37.4	9.17
	24.0	20.5	50.7	12.20	47.4	11.43	44.1	10.55	42.5	10.26	40.8	9.89	37.4	9.13

GMV-850WM/B-X(P)

TC—Total capacity of outdoor unit; PI—Power input of outdoor unit														
Connection ratio	Outdoor air temp.（℃）		Indoor air temp.（℃ DB）											
			16		18		20		21		22		24	
			TC	PI	TC	PI	TC	PI	TC	PI	TC	PI	TC	PI
	℃ DB	℃ WB	kW	kW	kW	kW	kW	kW	kW	kW	kW	kW	kW	kW
135%	-19.8	-20.0	60.5	21.46	60.4	23.02	60.2	24.18	60.1	24.97	60.0	25.87	59.8	27.42
	-18.8	-19.0	61.1	21.81	60.9	23.36	60.7	24.35	60.5	25.18	60.4	25.91	60.3	27.58
	-16.7	-17.0	62.2	22.38	62.0	23.78	61.7	24.82	61.5	25.36	61.5	26.23	61.3	27.77
	-13.7	-15.0	63.3	22.87	63.2	24.24	62.9	25.16	62.7	25.78	62.6	26.60	62.5	27.94
	-11.8	-13.0	64.2	23.31	64.1	24.50	63.9	25.31	63.8	26.09	63.7	26.76	63.5	28.07
	-9.8	-11.0	67.8	24.53	67.6	25.73	67.2	26.43	66.8	26.94	66.4	27.46	65.9	28.61
	-9.5	-10.0	69.4	25.03	68.9	26.08	68.4	26.70	68.1	27.21	67.8	27.85	67.6	28.96
	-8.5	-9.1	71.2	25.60	70.3	26.48	69.8	26.99	69.3	27.52	69.0	28.05	68.8	29.27
	-7.0	-7.6	72.2	25.83	72.0	26.84	71.8	27.48	71.8	28.08	71.5	28.68	71.3	29.86
	-5.0	-5.6	77.3	27.24	76.7	27.62	76.0	28.57	75.8	29.07	75.4	29.60	75.1	30.60
	-3.0	-3.7	80.6	28.02	79.7	28.79	79.5	29.20	79.2	29.80	79.0	30.27	78.7	31.31
	0.0	-0.7	86.8	29.33	85.6	29.83	85.4	30.28	85.4	30.80	85.1	31.32	85.1	32.28
	3.0	2.2	94.6	30.84	94.1	31.61	92.4	31.52	92.0	31.87	92.0	32.39	91.8	33.29
	5.0	4.1	98.2	31.26	97.9	32.02	97.4	32.18	97.0	32.64	96.7	33.04	96.4	33.86
	7.0	6.0	103.1	31.95	102.8	32.69	102.2	32.82	101.7	29.63	101.7	33.64	98.4	32.65
	9.0	7.9	108.0	32.53	107.7	33.23	107.3	33.37	107.0	33.82	104.9	33.25	98.4	30.69
	11.0	9.8	113.0	33.04	112.8	33.69	112.4	33.76	108.7	32.55	105.1	31.28	98.4	28.92
	13.0	11.8	119.0	33.64	118.7	34.29	112.8	31.77	108.7	30.51	105.1	29.38	98.4	27.14
	15.0	13.7	124.7	34.21	119.8	32.63	112.8	29.94	108.7	28.79	105.1	27.69	98.4	25.61
	18.0	16.8	124.7	34.12	119.8	32.54	112.8	29.86	108.7	28.71	105.1	27.61	98.4	25.55
	20.0	18.5	124.7	33.99	119.8	32.42	112.8	29.75	108.7	28.61	105.1	27.51	98.4	25.45
	24.0	20.5	124.7	33.83	119.8	32.27	112.8	29.62	108.7	28.48	105.1	27.39	98.4	25.34
120%	-19.8	-20.0	60.4	23.57	60.3	25.02	60.1	26.01	59.8	26.65	59.7	27.42	59.6	29.03
	-18.8	-19.0	60.9	23.87	60.8	25.31	60.6	25.86	60.3	26.89	60.2	27.60	60.1	29.18
	-16.7	-17.0	62.0	24.29	61.8	25.66	61.6	26.36	61.4	27.11	61.4	27.85	61.1	29.21
	-13.7	-15.0	63.0	24.66	62.9	25.92	62.7	26.67	62.4	27.28	62.5	27.99	62.4	29.36
	-11.8	-13.0	64.0	24.98	64.0	26.10	63.8	26.79	63.6	27.38	63.6	28.12	63.4	29.29
	-9.8	-11.0	67.7	26.17	67.5	27.27	66.9	27.68	66.8	28.38	66.4	28.83	65.8	29.90
	-9.5	-10.0	69.2	26.59	68.7	27.56	68.2	28.02	67.8	28.50	67.4	28.73	67.4	30.21
	-8.5	-9.1	70.7	27.04	70.0	27.92	69.7	28.32	69.2	28.82	68.9	29.36	68.7	30.48
	-7.0	-7.6	72.1	27.34	71.9	28.23	71.5	28.69	71.5	29.27	71.4	29.91	71.2	30.88
	-5.0	-5.6	77.2	28.67	76.6	29.52	76.0	29.85	75.8	30.32	75.4	30.74	75.0	31.70
	-3.0	-3.7	79.7	29.13	79.4	29.89	78.9	30.20	78.7	30.67	78.6	31.30	78.5	32.22
	0.0	-0.7	86.7	30.59	85.5	31.00	85.1	31.65	85.1	31.79	84.9	32.34	84.8	33.22
	3.0	2.2	94.3	31.96	93.8	32.65	92.3	32.43	92.0	32.92	91.8	33.29	90.9	33.60
	5.0	4.1	98.0	32.33	97.6	33.02	97.2	33.16	97.0	33.62	96.7	33.99	90.7	31.48
	7.0	6.0	102.8	32.95	102.1	33.39	102.0	33.67	101.2	33.60	96.5	31.85	90.2	29.47
	9.0	7.9	107.8	33.53	107.2	34.07	104.1	32.67	101.6	31.70	96.5	29.96	90.2	27.74
	11.0	9.8	112.8	33.95	109.9	33.33	105.4	31.13	101.8	29.93	96.5	28.21	90.2	26.15
	13.0	11.8	116.7	33.59	109.9	31.26	105.4	29.21	101.8	28.12	96.5	26.53	90.2	24.60
	15.0	13.7	116.7	31.63	109.9	29.44	105.4	27.58	101.8	26.52	96.5	25.03	90.2	23.23
	18.0	16.8	116.7	31.54	109.9	29.36	105.4	27.51	101.8	26.45	96.5	24.97	90.2	23.17
	20.0	18.5	116.7	31.42	109.9	29.25	105.4	27.41	101.8	26.35	96.5	24.88	90.2	23.08
	24.0	20.5	116.7	31.27	109.9	29.12	105.4	27.28	101.8	26.23	96.5	24.76	90.2	22.98

GMV X DC Inverter VRF Units

TC—Total capacity of outdoor unit; PI—Power input of outdoor unit														
Connection ratio	Outdoor air temp.（℃）		Indoor air temp.（℃ DB）											
			16		18		20		21		22		24	
			TC	PI	TC	PI	TC	PI	TC	PI	TC	PI	TC	PI
	℃ DB	℃ WB	kW	kW	kW	kW	kW	kW	kW	kW	kW	kW	kW	kW
110%	-19.8	-20.0	60.2	25.72	60.1	27.04	59.9	27.84	59.9	28.54	59.7	29.22	59.6	30.72
	-18.8	-19.0	60.8	25.95	60.7	27.14	60.5	27.90	60.2	28.50	60.0	29.26	59.9	30.59
	-16.7	-17.0	61.8	26.24	61.7	27.50	61.5	28.06	61.2	28.75	61.2	29.44	61.0	30.75
	-13.7	-15.0	62.9	26.49	62.8	27.68	62.6	28.27	62.3	28.81	62.3	29.47	62.3	30.79
	-11.8	-13.0	63.9	26.73	63.8	27.69	63.5	28.22	63.4	28.75	63.4	29.49	63.2	30.59
	-9.8	-11.0	67.4	27.78	67.2	28.80	67.1	29.23	67.1	29.95	66.4	30.22	66.3	31.26
	-9.5	-10.0	68.8	28.10	70.3	29.79	70.2	30.34	70.1	30.92	69.4	31.19	67.6	31.56
	-8.5	-9.1	70.5	28.61	70.9	29.85	70.7	30.19	70.7	30.76	69.8	31.09	68.9	31.72
	-7.0	-7.6	71.9	28.81	71.8	29.63	71.6	30.04	71.5	30.60	70.6	30.41	70.3	31.71
	-5.0	-5.6	77.0	30.13	76.8	31.04	76.6	31.38	76.6	31.92	75.5	30.57	75.4	33.06
	-3.0	-3.7	79.6	30.50	82.4	32.42	82.3	32.81	82.3	33.32	81.1	30.93	79.8	33.90
	0.0	-0.7	86.4	31.82	85.3	32.17	84.8	32.33	88.0	34.00	86.5	32.62	84.2	33.50
	3.0	2.2	94.1	33.16	95.4	34.41	95.1	34.52	94.2	34.70	91.0	33.39	84.2	30.50
	5.0	4.1	97.6	33.36	104.4	36.42	97.9	34.01	96.4	33.41	91.8	31.69	84.2	28.70
	7.0	6.0	102.6	33.99	104.4	35.10	100.8	32.90	97.0	31.62	91.8	29.80	84.2	27.02
	9.0	7.9	107.4	34.41	104.4	32.99	101.0	31.05	97.1	29.80	91.8	28.06	84.2	25.47
	11.0	9.8	107.4	32.37	104.4	31.04	101.0	29.24	97.1	28.10	91.8	26.46	84.2	24.04
	13.0	11.8	107.4	30.36	104.4	29.12	101.0	27.51	97.1	26.44	91.8	24.90	84.2	22.64
	15.0	13.7	107.4	28.60	104.4	27.46	101.0	25.99	97.1	24.96	91.8	23.56	84.2	21.43
	18.0	16.8	107.4	28.53	104.4	27.39	101.0	25.93	97.1	24.90	91.8	23.50	84.2	21.38
	20.0	18.5	107.4	28.42	104.4	27.29	101.0	25.83	97.1	24.81	91.8	23.42	84.2	21.30
	24.0	20.5	107.4	28.29	104.4	27.17	101.0	25.72	97.1	24.70	91.8	23.31	84.2	21.21
100%	-19.8	-20.0	59.9	27.71	59.7	28.93	59.6	29.45	59.4	30.17	59.2	30.78	59.0	32.11
	-18.8	-19.0	60.4	27.90	60.3	28.97	60.1	29.59	59.9	30.16	59.7	30.92	59.5	32.05
	-16.7	-17.0	61.4	28.07	61.4	29.27	61.2	29.64	60.9	30.16	60.7	30.83	60.4	31.89
	-13.7	-15.0	62.5	28.20	62.5	29.32	62.3	29.64	62.0	30.28	61.7	30.75	61.4	31.84
	-11.8	-13.0	63.6	28.36	63.4	29.21	63.2	29.61	63.0	30.07	62.7	29.46	62.6	31.67
	-9.8	-11.0	67.1	29.33	66.9	30.28	66.7	30.49	66.7	31.11	66.2	31.55	65.8	32.34
	-9.5	-10.0	70.1	30.35	69.9	31.27	69.8	31.54	69.8	32.21	69.2	32.51	66.9	32.54
	-8.5	-9.1	70.5	30.26	70.4	31.09	70.2	31.39	70.2	31.93	69.6	32.35	68.5	32.79
	-7.0	-7.6	71.2	30.08	71.3	30.92	71.2	31.21	71.0	31.70	71.0	32.22	70.9	33.24
	-5.0	-5.6	75.7	31.09	75.4	31.87	75.3	32.06	75.1	32.60	74.7	32.88	74.6	33.77
	-3.0	-3.7	81.3	32.62	81.1	33.26	80.9	33.50	80.5	33.83	79.1	33.70	77.4	33.10
	0.0	-0.7	84.8	32.56	84.8	33.20	84.8	33.45	84.2	33.31	80.8	31.82	77.4	30.11
	3.0	2.2	93.7	34.21	93.2	34.76	90.2	32.64	86.9	31.30	83.5	29.94	77.4	27.41
	5.0	4.1	99.7	35.29	96.7	33.87	91.2	31.04	87.8	29.79	83.5	28.20	77.4	25.86
	7.0	6.0	99.7	33.30	96.7	31.84	95.0	27.00	87.8	28.07	83.5	26.57	77.4	24.38
	9.0	7.9	99.7	31.28	96.7	29.96	95.0	28.48	87.8	26.46	83.5	25.06	77.4	23.01
	11.0	9.8	99.7	29.45	96.7	28.24	95.0	26.90	87.8	24.96	83.5	23.65	77.4	21.75
	13.0	11.8	99.7	27.66	96.7	26.55	95.0	25.36	87.8	23.53	83.5	22.31	77.4	20.53
	15.0	13.7	99.7	26.10	96.7	25.06	95.0	23.97	87.8	22.25	83.5	21.09	77.4	19.45
	18.0	16.8	99.7	26.03	96.7	24.99	95.0	23.90	87.8	22.19	83.5	21.03	77.4	19.40
	20.0	18.5	99.7	25.93	96.7	24.90	95.0	23.82	87.8	22.12	83.5	20.96	77.4	19.33
	24.0	20.5	99.7	25.81	96.7	24.79	95.0	23.72	87.8	22.02	83.5	20.87	77.4	19.25

TC—Total capacity of outdoor unit; PI—Power input of outdoor unit														
Connection ratio	Outdoor air temp.（℃）		Indoor air temp.（℃ DB）											
			16		18		20		21		22		24	
			TC	PI	TC	PI	TC	PI	TC	PI	TC	PI	TC	PI
	℃ DB	℃ WB	kW	kW	kW	kW	kW	kW	kW	kW	kW	kW	kW	kW
90%	-19.8	-20.0	59.7	29.85	59.6	30.96	59.5	31.27	59.2	31.94	59.1	32.57	59.0	33.67
	-18.8	-19.0	78.2	38.90	78.0	40.18	78.0	40.79	78.0	41.63	77.9	42.45	73.0	41.37
	-16.7	-17.0	79.5	39.01	79.3	40.35	79.3	40.71	79.3	41.54	79.3	42.49	73.1	40.48
	-13.7	-15.0	80.9	39.01	80.9	40.33	80.7	40.56	80.7	41.13	79.9	41.86	73.2	39.56
	-11.8	-13.0	82.2	38.96	82.1	40.02	81.9	40.38	82.0	41.13	79.9	40.77	73.2	38.64
	-9.8	-11.0	83.5	38.68	83.5	39.66	83.3	39.96	83.1	40.56	80.0	39.71	73.3	37.56
	-9.5	-10.0	84.2	38.49	84.2	39.62	84.0	39.71	83.3	40.18	80.1	39.27	73.3	36.94
	-8.5	-9.1	84.8	38.41	84.7	39.26	84.6	39.57	83.3	39.53	80.1	38.63	73.3	36.30
	-7.0	-7.6	85.7	38.06	85.5	38.84	85.5	39.15	83.1	38.64	79.9	37.71	73.2	34.60
	-5.0	-5.6	91.0	39.20	90.8	40.10	85.8	37.98	82.6	37.10	79.5	35.75	72.8	32.35
	-3.0	-3.7	92.1	38.61	92.1	35.09	85.8	36.57	82.6	35.17	79.5	33.69	72.8	30.50
	0.0	-0.7	94.0	37.40	92.2	32.79	85.8	33.24	82.6	31.98	79.5	30.64	72.8	27.76
	3.0	2.2	96.7	35.64	92.2	33.52	85.8	30.32	82.6	29.20	79.5	27.98	72.8	25.40
	5.0	4.1	98.7	34.20	92.2	31.53	85.8	28.60	82.6	27.52	79.5	26.41	72.8	23.96
	7.0	6.0	98.7	32.15	92.2	29.71	85.8	26.96	82.6	25.99	79.5	24.92	72.8	22.65
	9.0	7.9	98.7	30.31	92.2	27.96	85.8	25.44	82.6	24.53	79.5	23.55	72.8	21.41
	11.0	9.8	98.7	28.55	92.2	26.38	85.8	24.06	82.6	23.20	79.5	22.25	72.8	20.28
	13.0	11.8	98.7	26.86	92.2	24.88	85.8	22.69	82.6	21.90	79.5	21.03	72.8	19.15
	15.0	13.7	98.7	25.39	92.2	23.50	85.8	21.51	82.6	20.68	79.5	19.93	72.8	18.18
	18.0	16.8	98.7	25.32	92.2	23.44	85.8	21.46	82.6	20.63	79.5	19.88	72.8	18.14
	20.0	18.5	98.7	25.23	92.2	23.36	85.8	21.38	82.6	20.55	79.5	19.81	72.8	18.07
	24.0	20.5	98.7	25.12	92.2	23.26	85.8	21.29	82.6	20.46	79.5	19.73	72.8	18.00
80%	-19.8	-20.0	59.5	31.95	59.5	33.00	59.2	33.05	59.1	33.60	59.0	34.33	58.7	35.25
	-18.8	-19.0	77.9	41.56	77.8	42.74	76.5	42.41	73.7	41.59	70.9	40.70	65.0	38.71
	-16.7	-17.0	79.2	41.51	79.2	42.77	76.6	41.56	73.7	40.70	70.9	39.82	65.0	37.76
	-13.7	-15.0	80.7	41.41	80.6	42.52	76.8	40.64	73.9	39.74	71.1	39.04	65.2	36.83
	-11.8	-13.0	82.0	41.20	81.8	42.10	76.8	39.71	73.9	38.82	71.1	37.95	65.2	35.09
	-9.8	-11.0	83.4	40.76	82.7	41.33	76.9	38.63	74.0	37.71	71.2	36.66	65.3	33.21
	-9.5	-10.0	84.0	40.49	82.7	40.86	76.9	38.00	74.0	37.13	71.2	35.62	65.3	32.25
	-8.5	-9.1	84.5	40.27	82.7	40.24	76.9	37.52	74.0	36.23	71.2	34.68	65.3	31.40
	-7.0	-7.6	85.4	39.83	82.6	39.27	76.8	36.00	73.9	34.52	71.1	33.09	65.2	30.10
	-5.0	-5.6	87.8	35.29	82.1	37.44	76.3	33.66	73.5	32.30	70.7	30.95	64.8	28.07
	-3.0	-3.7	87.8	34.13	82.1	35.25	76.3	31.72	73.5	30.59	70.7	29.19	64.8	26.52
	0.0	-0.7	87.8	34.71	82.1	31.99	76.3	28.92	73.5	27.79	70.7	26.62	64.8	24.21
	3.0	2.2	87.8	31.63	82.1	29.19	76.3	26.46	73.5	25.40	70.7	24.39	64.8	22.19
	5.0	4.1	87.8	29.78	82.1	27.52	76.3	24.98	73.5	24.00	70.7	23.06	64.8	20.99
	7.0	6.0	87.8	28.05	82.1	26.02	76.3	23.61	73.5	22.70	70.7	21.81	64.8	19.87
	9.0	7.9	87.8	26.49	82.1	24.51	76.3	22.43	73.5	21.45	70.7	20.63	64.8	18.82
	11.0	9.8	87.8	25.01	82.1	23.17	76.3	21.13	73.5	20.31	70.7	19.53	64.8	17.85
	13.0	11.8	87.8	23.57	82.1	21.87	76.3	19.99	73.5	19.21	70.7	18.47	64.8	16.88
	15.0	13.7	87.8	22.29	82.1	20.73	76.3	18.97	73.5	18.22	70.7	17.53	64.8	16.07
	18.0	16.8	87.8	22.24	82.1	20.67	76.3	18.92	73.5	18.18	70.7	17.49	64.8	16.03
	20.0	18.5	87.8	22.16	82.1	20.60	76.3	18.85	73.5	18.12	70.7	17.43	64.8	15.97
	24.0	20.5	87.8	22.06	82.1	20.51	76.3	18.77	73.5	18.04	70.7	17.35	64.8	15.90

TC—Total capacity of outdoor unit; PI—Power input of outdoor unit														
Connection ratio	Outdoor air temp.（℃）		Indoor air temp.（℃ DB）											
			16		18		20		21		22		24	
			TC	PI	TC	PI	TC	PI	TC	PI	TC	PI	TC	PI
	℃ DB	℃ WB	kW	kW	kW	kW	kW	kW	kW	kW	kW	kW	kW	kW
70%	-19.8	-20.0	59.3	34.05	59.1	34.92	58.9	34.74	58.5	35.08	57.7	35.23	56.0	34.85
	-18.8	-19.0	77.2	44.06	72.2	42.11	67.1	39.27	64.6	38.42	62.0	37.52	56.9	34.66
	-16.7	-17.0	77.3	43.10	72.2	41.18	67.2	38.37	64.7	37.52	62.1	36.52	56.9	33.11
	-13.7	-15.0	77.4	42.11	72.4	40.36	67.3	37.44	64.8	4.10	62.2	34.80	57.0	31.55
	-11.8	-13.0	77.4	41.12	72.4	39.18	67.3	35.73	64.8	34.47	62.2	33.00	57.0	29.92
	-9.8	-11.0	77.6	39.93	72.5	37.74	67.4	33.85	64.9	32.65	62.3	31.25	57.1	28.37
	-9.5	-10.0	77.6	39.31	72.5	36.65	67.4	32.89	64.9	31.72	62.3	30.40	57.2	27.61
	-8.5	-9.1	77.6	38.73	72.5	35.67	67.4	32.04	64.9	30.90	62.3	29.62	57.2	26.91
	-7.0	-7.6	77.4	36.92	72.4	34.00	67.3	30.61	64.8	29.55	62.2	28.30	57.0	25.72
	-5.0	-5.6	77.0	34.48	71.9	31.81	66.9	28.69	64.4	27.66	61.8	26.50	56.7	24.14
	-3.0	-3.7	77.0	32.47	71.9	29.98	66.9	27.10	64.4	26.13	61.8	25.05	56.7	22.82
	0.0	-0.7	77.0	29.55	71.9	27.46	66.9	24.76	64.4	23.90	61.8	22.94	56.7	20.92
	3.0	2.2	77.0	27.00	71.9	25.04	66.9	22.73	64.4	21.94	61.8	21.06	56.7	19.22
	5.0	4.1	77.0	25.48	71.9	23.60	66.9	21.52	64.4	20.76	61.8	19.96	56.7	18.21
	7.0	6.0	77.0	24.09	71.9	22.34	66.9	20.34	64.4	19.66	61.8	18.90	56.7	17.27
	9.0	7.9	77.0	22.77	71.9	21.12	66.9	19.29	64.4	18.64	61.8	17.91	56.7	16.38
	11.0	9.8	77.0	21.54	71.9	19.98	66.9	18.30	64.4	17.69	61.8	17.01	56.7	15.56
	13.0	11.8	77.0	20.35	71.9	18.93	66.9	17.32	64.4	16.78	61.8	16.10	56.7	14.78
	15.0	13.7	77.0	19.28	71.9	17.95	66.9	16.45	64.4	15.95	61.8	15.32	56.7	14.08
	18.0	16.8	77.0	19.23	71.9	17.90	66.9	16.41	64.4	15.91	61.8	15.28	56.7	14.05
	20.0	18.5	77.0	19.16	71.9	17.84	66.9	16.36	64.4	15.86	61.8	15.22	56.7	14.00
	24.0	20.5	77.0	19.08	71.9	17.76	66.9	16.29	64.4	15.79	61.8	15.16	56.7	13.94
60%	-19.8	-20.0	59.9	36.66	57.0	35.73	53.5	32.64	51.9	31.58	49.8	30.24	45.7	27.46
	-18.8	-19.0	66.3	40.25	61.8	38.23	57.5	34.34	55.4	32.99	53.3	31.66	48.8	28.68
	-16.7	-17.0	66.3	39.25	61.9	36.69	57.6	32.84	55.4	31.55	53.3	30.29	48.8	27.47
	-13.7	-15.0	66.5	37.99	62.0	34.92	57.7	31.32	55.5	30.10	53.4	28.91	48.9	26.21
	-11.8	-13.0	66.5	35.96	62.0	33.08	57.7	29.73	55.5	28.58	53.4	27.46	48.9	24.93
	-9.8	-11.0	66.6	34.03	62.1	31.33	57.8	28.22	55.6	27.10	53.5	26.05	49.0	23.69
	-9.5	-10.0	66.6	33.09	62.1	30.48	57.8	27.45	55.6	26.41	53.5	25.36	49.0	23.04
	-8.5	-9.1	66.6	32.21	62.1	29.70	57.8	26.79	55.6	25.75	53.5	24.73	49.0	22.50
	-7.0	-7.6	66.5	30.74	62.0	28.37	57.7	25.60	55.5	24.64	53.4	23.66	48.9	21.56
	-5.0	-5.6	66.1	28.79	61.7	26.58	57.3	24.05	55.2	23.13	53.1	22.24	48.6	20.27
	-3.0	-3.7	66.1	27.18	61.7	25.11	57.3	22.85	55.2	21.92	53.1	21.06	48.6	19.19
	0.0	-0.7	66.1	24.83	61.7	22.99	57.3	20.89	55.2	20.13	53.1	19.34	48.6	17.64
	3.0	2.2	66.1	22.77	61.7	21.12	57.3	19.25	55.2	18.52	53.1	17.85	48.6	16.29
	5.0	4.1	66.1	21.53	61.7	19.98	57.3	18.23	55.2	17.58	53.1	16.91	48.6	15.48
	7.0	6.0	66.1	20.38	61.7	18.92	57.3	17.29	55.2	16.68	53.1	16.08	48.6	14.70
	9.0	7.9	66.1	19.31	61.7	17.94	57.3	16.42	55.2	15.85	53.1	15.26	48.6	14.00
	11.0	9.8	66.1	18.32	61.7	17.05	57.3	15.63	55.2	15.07	53.1	14.51	48.6	13.34
	13.0	11.8	66.1	17.33	61.7	16.15	57.3	14.85	55.2	14.32	53.1	13.80	48.6	12.68
	15.0	13.7	66.1	16.50	61.7	15.33	57.3	14.14	55.2	13.65	53.1	13.17	48.6	12.10
	18.0	16.8	66.1	16.46	61.7	15.29	57.3	14.10	55.2	13.61	53.1	13.14	48.6	12.07
	20.0	18.5	66.1	16.40	61.7	15.24	57.3	14.05	55.2	13.57	53.1	13.09	48.6	12.03
	24.0	20.5	66.1	16.33	61.7	15.18	57.3	13.99	55.2	13.51	53.1	13.04	48.6	11.98

TC—Total capacity of outdoor unit; PI—Power input of outdoor unit														
Connection ratio	Outdoor air temp.（℃）		Indoor air temp.（℃ DB）											
			16		18		20		21		22		24	
			TC	PI	TC	PI	TC	PI	TC	PI	TC	PI	TC	PI
	℃ DB	℃ WB	kW	kW	kW	kW	kW	kW	kW	kW	kW	kW	kW	kW
50%	-19.8	-20.0	50.9	31.40	47.9	29.14	44.3	25.97	43.0	25.34	41.1	24.21	38.7	22.68
	-18.8	-19.0	55.2	33.30	51.6	30.74	48.0	27.60	46.2	26.69	44.4	25.61	40.8	23.39
	-16.7	-17.0	55.3	31.81	51.7	29.38	48.1	26.44	46.3	25.59	44.5	24.58	40.8	22.44
	-13.7	-15.0	55.4	30.35	51.8	28.05	48.2	25.25	46.4	24.47	44.5	23.49	40.9	21.48
	-11.8	-13.0	55.4	28.82	51.8	26.70	48.2	24.05	46.4	23.29	44.5	22.36	40.9	20.46
	-9.8	-11.0	55.4	27.33	51.9	25.30	48.3	22.88	46.5	22.15	44.6	21.29	40.9	19.48
	-9.5	-10.0	55.5	26.60	51.9	24.62	48.3	22.30	46.5	21.61	44.6	20.75	41.0	18.98
	-8.5	-9.1	55.5	25.94	51.9	24.05	48.3	21.76	46.5	21.10	44.6	20.27	41.0	18.55
	-7.0	-7.6	55.4	24.81	51.8	23.10	48.2	20.86	46.4	20.23	44.5	19.45	40.9	17.81
	-5.0	-5.6	55.0	23.27	51.5	21.62	47.9	19.65	46.1	19.05	44.3	18.31	40.6	16.77
	-3.0	-3.7	55.0	22.03	51.5	20.48	47.9	18.63	46.1	18.07	44.3	17.37	40.6	15.95
	0.0	-0.7	55.0	20.23	51.5	18.81	47.9	17.19	46.1	16.66	44.3	16.03	40.6	14.74
	3.0	2.2	55.0	18.62	51.5	17.35	47.9	15.86	46.1	15.40	44.3	14.85	40.6	13.65
	5.0	4.1	55.0	17.68	51.5	16.45	47.9	15.07	46.1	14.65	44.3	14.11	40.6	12.99
	7.0	6.0	55.0	16.77	51.5	15.64	47.9	14.37	46.1	13.94	44.3	13.44	40.6	12.40
	9.0	7.9	55.0	15.91	51.5	14.87	47.9	13.66	46.1	13.30	44.3	12.80	40.6	11.82
	11.0	9.8	55.0	15.13	51.5	14.13	47.9	13.03	46.1	12.67	44.3	12.21	40.6	11.27
	13.0	11.8	55.0	14.39	51.5	13.44	47.9	12.40	46.1	12.08	44.3	11.62	40.6	10.76
	15.0	13.7	55.0	13.69	51.5	12.83	47.9	11.85	46.1	11.52	44.3	11.11	40.6	10.25
	18.0	16.8	55.0	13.66	51.5	12.80	47.9	11.82	46.1	11.49	44.3	11.08	40.6	10.23
	20.0	18.5	55.0	13.61	51.5	12.75	47.9	11.78	46.1	11.45	44.3	11.04	40.6	10.19
	24.0	20.5	55.0	13.55	51.5	12.70	47.9	11.73	46.1	11.40	44.3	10.99	40.6	10.15

GMV-900WM/B-X(P)

TC—Total capacity of outdoor unit; PI—Power input of outdoor unit														
Connection ratio	Outdoor air temp. (℃)		Indoor air temp. (℃ DB)											
			16		18		20		21		22		24	
			TC	PI	TC	PI	TC	PI	TC	PI	TC	PI	TC	PI
	℃ DB	℃ WB	kW	kW	kW	kW	kW	kW	kW	kW	kW	kW	kW	kW
135%	-19.8	-20.0	63.7	23.45	63.6	25.15	63.4	26.42	63.3	27.28	63.1	28.26	63.0	29.96
	-18.8	-19.0	64.3	23.83	64.2	25.52	63.9	26.61	63.7	27.51	63.5	28.31	63.5	30.14
	-16.7	-17.0	65.5	24.45	65.2	25.99	65.0	27.12	64.7	27.71	64.7	28.66	64.5	30.34
	-13.7	-15.0	66.6	24.99	66.5	26.48	66.2	27.49	66.0	28.17	65.9	29.07	65.8	30.53
	-11.8	-13.0	67.6	25.47	67.5	26.77	67.3	27.66	67.2	28.51	67.1	29.24	66.9	30.67
	-9.8	-11.0	71.4	26.80	71.2	28.11	70.7	28.87	70.3	29.44	69.9	30.00	69.4	31.26
	-9.5	-10.0	73.1	27.35	72.5	28.50	72.0	29.17	71.6	29.73	71.4	30.43	71.1	31.65
	-8.5	-9.1	74.9	27.97	74.0	28.93	73.5	29.49	72.9	30.07	72.7	30.65	72.4	31.98
	-7.0	-7.6	76.0	28.23	75.8	29.32	75.6	30.02	75.6	30.68	75.3	31.34	75.0	32.63
	-5.0	-5.6	81.4	29.77	80.8	30.18	80.0	31.22	79.7	31.76	79.3	32.34	79.1	33.44
	-3.0	-3.7	84.8	30.62	83.9	31.46	83.7	31.91	83.4	32.56	83.1	33.07	82.9	34.21
	0.0	-0.7	91.4	32.05	90.1	32.59	89.9	33.09	89.9	33.65	89.5	34.23	89.5	35.27
	3.0	2.2	99.6	33.70	99.1	34.54	97.3	34.44	96.9	34.82	96.9	35.39	96.6	36.37
	5.0	4.1	103.4	34.15	103.0	34.99	102.5	35.16	102.1	35.66	101.8	36.10	101.4	36.99
	7.0	6.0	108.5	34.91	108.2	35.71	107.6	35.85	107.1	32.37	107.1	36.76	103.5	35.67
	9.0	7.9	113.7	35.55	113.3	36.30	112.9	36.46	112.7	36.96	110.5	36.33	103.5	33.53
	11.0	9.8	119.0	36.10	118.7	36.81	118.3	36.88	114.4	35.56	110.6	34.18	103.5	31.59
	13.0	11.8	125.2	36.75	125.0	37.47	118.7	34.71	114.4	33.33	110.6	32.10	103.5	29.65
	15.0	13.7	131.2	37.38	126.1	35.65	118.7	32.72	114.4	31.46	110.6	30.25	103.5	27.98
	18.0	16.8	131.2	37.28	126.1	35.55	118.7	32.63	114.4	31.37	110.6	30.17	103.5	27.91
	20.0	18.5	131.2	37.14	126.1	35.42	118.7	32.51	114.4	31.26	110.6	30.06	103.5	27.81
	24.0	20.5	131.2	36.96	126.1	35.25	118.7	32.36	114.4	31.11	110.6	29.92	103.5	27.68
120%	-19.8	-20.0	63.6	25.76	63.4	27.34	63.2	28.42	62.9	29.12	62.9	29.96	62.8	31.72
	-18.8	-19.0	64.1	26.08	64.0	27.65	63.8	28.25	63.5	29.37	63.3	30.16	63.3	31.88
	-16.7	-17.0	65.2	26.54	65.1	28.03	64.9	28.80	64.6	29.62	64.6	30.43	64.3	31.92
	-13.7	-15.0	66.4	26.94	66.2	28.32	66.0	29.14	65.7	29.81	65.8	30.59	65.6	32.08
	-11.8	-13.0	67.4	27.29	67.4	28.51	67.1	29.27	66.9	29.91	66.9	30.73	66.8	32.01
	-9.8	-11.0	71.2	28.60	71.0	29.79	70.5	30.24	70.3	31.01	69.9	31.50	69.3	32.67
	-9.5	-10.0	72.8	29.05	72.3	30.12	71.8	30.62	71.4	31.14	71.0	31.39	71.0	33.01
	-8.5	-9.1	74.4	29.54	73.7	30.51	73.3	30.94	72.8	31.49	72.5	32.08	72.3	33.31
	-7.0	-7.6	75.9	29.87	75.7	30.85	75.3	31.35	75.2	31.98	75.2	32.68	74.9	33.74
	-5.0	-5.6	81.2	31.32	80.7	32.25	80.0	32.61	79.7	33.12	79.3	33.58	79.0	34.64
	-3.0	-3.7	83.9	31.83	83.5	32.66	83.0	32.99	82.9	33.51	82.7	34.20	82.6	35.20
	0.0	-0.7	91.2	33.43	90.0	33.87	89.5	34.58	89.5	34.73	89.4	35.34	89.3	36.30
	3.0	2.2	99.2	34.92	98.7	35.68	97.1	35.43	96.9	35.97	96.6	36.38	95.7	36.71
	5.0	4.1	103.1	35.32	102.7	36.08	102.4	36.23	102.1	36.73	101.8	37.14	95.4	34.40
	7.0	6.0	108.2	36.00	107.5	36.49	107.3	36.79	106.5	36.71	101.6	34.80	94.9	32.20
	9.0	7.9	113.5	36.63	112.8	37.22	109.6	35.70	106.9	34.64	101.6	32.74	94.9	30.31
	11.0	9.8	118.7	37.10	115.7	36.41	111.0	34.01	107.2	32.70	101.6	30.82	94.9	28.57
	13.0	11.8	122.9	36.70	115.7	34.15	111.0	31.91	107.2	30.72	101.6	28.99	94.9	26.88
	15.0	13.7	122.9	34.56	115.7	32.17	111.0	30.13	107.2	28.97	101.6	27.35	94.9	25.38
	18.0	16.8	122.9	34.46	115.7	32.08	111.0	30.05	107.2	28.90	101.6	27.28	94.9	25.31
	20.0	18.5	122.9	34.33	115.7	31.96	111.0	29.94	107.2	28.79	101.6	27.18	94.9	25.22
	24.0	20.5	122.9	34.17	115.7	31.81	111.0	29.81	107.2	28.66	101.6	27.06	94.9	25.11

TC—Total capacity of outdoor unit; PI—Power input of outdoor unit														
Connection ratio	Outdoor air temp.（℃）		Indoor air temp.（℃ DB）											
			16		18		20		21		22		24	
			TC	PI	TC	PI	TC	PI	TC	PI	TC	PI	TC	PI
	℃ DB	℃ WB	kW	kW	kW	kW	kW	kW	kW	kW	kW	kW	kW	kW
110%	-19.8	-20.0	63.3	28.10	63.3	29.54	63.1	30.42	63.0	31.19	62.9	31.93	62.7	33.57
	-18.8	-19.0	64.0	28.35	63.9	29.65	63.6	30.48	63.4	31.14	63.1	31.97	63.1	33.43
	-16.7	-17.0	65.1	28.67	65.0	30.05	64.7	30.66	64.5	31.41	64.4	32.17	64.2	33.60
	-13.7	-15.0	66.2	28.94	66.1	30.24	65.9	30.88	65.6	31.48	65.6	32.20	65.5	33.64
	-11.8	-13.0	67.2	29.20	67.1	30.26	66.9	30.83	66.7	31.42	66.7	32.22	66.6	33.43
	-9.8	-11.0	71.0	30.35	70.8	31.47	70.7	31.93	70.6	32.72	69.9	33.02	69.8	34.15
	-9.5	-10.0	72.4	30.70	74.0	32.55	73.9	33.15	73.8	33.78	73.1	34.08	71.2	34.49
	-8.5	-9.1	74.2	31.26	74.7	32.61	74.4	32.99	74.4	33.61	73.5	33.97	72.6	34.65
	-7.0	-7.6	75.7	31.48	75.5	32.37	75.3	32.82	75.3	33.43	74.4	33.23	73.9	34.64
	-5.0	-5.6	81.1	32.92	80.9	33.91	80.6	34.29	80.6	34.87	79.5	33.41	79.3	36.12
	-3.0	-3.7	83.8	33.33	86.8	35.42	86.7	35.85	86.6	36.41	85.4	33.79	84.0	37.04
	0.0	-0.7	91.0	34.76	89.8	35.15	89.3	35.32	92.6	37.15	91.1	35.64	88.7	36.60
	3.0	2.2	99.1	36.23	100.4	37.60	100.2	37.71	99.1	37.91	95.8	36.48	88.7	33.32
	5.0	4.1	102.7	36.45	109.9	39.80	103.1	37.16	101.5	36.51	96.7	34.63	88.7	31.36
	7.0	6.0	108.0	37.13	109.9	38.35	106.1	35.95	102.1	34.54	96.7	32.56	88.7	29.52
	9.0	7.9	113.1	37.60	109.9	36.05	106.3	33.93	102.2	32.56	96.7	30.66	88.7	27.83
	11.0	9.8	113.1	35.36	109.9	33.91	106.3	31.95	102.2	30.70	96.7	28.91	88.7	26.27
	13.0	11.8	113.1	33.17	109.9	31.82	106.3	30.05	102.2	28.88	96.7	27.21	88.7	24.74
	15.0	13.7	113.1	31.25	109.9	30.01	106.3	28.40	102.2	27.27	96.7	25.74	88.7	23.41
	18.0	16.8	113.1	31.17	109.9	29.93	106.3	28.33	102.2	27.20	96.7	25.68	88.7	23.35
	20.0	18.5	113.1	31.05	109.9	29.82	106.3	28.23	102.2	27.10	96.7	25.59	88.7	23.27
	24.0	20.5	113.1	30.91	109.9	29.68	106.3	28.10	102.2	26.98	96.7	25.47	88.7	23.17
100%	-19.8	-20.0	63.0	30.28	62.9	31.61	62.7	32.17	62.5	32.96	62.4	33.63	62.1	35.09
	-18.8	-19.0	63.6	30.49	63.4	31.65	63.3	32.32	63.1	32.95	62.9	33.78	62.6	35.01
	-16.7	-17.0	64.6	30.67	64.6	31.98	64.4	32.38	64.1	32.95	63.9	33.69	63.6	34.85
	-13.7	-15.0	65.8	30.81	65.8	32.03	65.5	32.38	65.3	33.09	65.0	33.60	64.6	34.79
	-11.8	-13.0	66.9	30.99	66.8	31.92	66.5	32.35	66.3	32.85	66.0	32.18	65.9	34.61
	-9.8	-11.0	70.6	32.05	70.4	33.09	70.2	33.32	70.2	33.99	69.7	34.47	69.2	35.33
	-9.5	-10.0	73.8	33.16	73.6	34.17	73.5	34.46	73.5	35.20	72.8	35.52	70.4	35.56
	-8.5	-9.1	74.3	33.06	74.1	33.97	73.9	34.30	73.9	34.89	73.3	35.34	72.1	35.82
	-7.0	-7.6	75.0	32.86	75.0	33.78	74.9	34.10	74.8	34.64	74.8	35.20	74.6	36.32
	-5.0	-5.6	79.6	33.97	79.4	34.82	79.3	35.03	79.1	35.62	78.6	35.92	78.6	36.90
	-3.0	-3.7	85.6	35.64	85.4	36.34	85.1	36.60	84.7	36.96	83.2	36.83	81.4	36.16
	0.0	-0.7	89.3	35.58	89.3	36.28	89.3	36.55	88.6	36.40	85.1	34.76	81.4	32.90
	3.0	2.2	98.6	37.38	98.1	37.98	95.0	35.66	91.5	34.19	87.8	32.71	81.4	29.95
	5.0	4.1	104.9	38.55	101.8	37.01	96.0	33.91	92.5	32.55	87.8	30.81	81.4	28.25
	7.0	6.0	104.9	36.38	101.8	34.79	100.0	29.50	92.5	30.67	87.8	29.03	81.4	26.64
	9.0	7.9	104.9	34.18	101.8	32.74	100.0	31.12	92.5	28.91	87.8	27.38	81.4	25.14
	11.0	9.8	104.9	32.18	101.8	30.85	100.0	29.39	92.5	27.27	87.8	25.84	81.4	23.76
	13.0	11.8	104.9	30.22	101.8	29.01	100.0	27.71	92.5	25.71	87.8	24.38	81.4	22.43
	15.0	13.7	104.9	28.51	101.8	27.38	100.0	26.18	92.5	24.31	87.8	23.04	81.4	21.25
	18.0	16.8	104.9	28.44	101.8	27.30	100.0	26.12	92.5	24.25	87.8	22.98	81.4	21.20
	20.0	18.5	104.9	28.33	101.8	27.21	100.0	26.03	92.5	24.17	87.8	22.90	81.4	21.12
	24.0	20.5	104.9	28.20	101.8	27.08	100.0	25.91	92.5	24.06	87.8	22.80	81.4	21.03

GMV X DC Inverter VRF Units

TC—Total capacity of outdoor unit; PI—Power input of outdoor unit														
Connection ratio	Outdoor air temp.（℃）		Indoor air temp.（℃ DB）											
			16		18		20		21		22		24	
			TC	PI	TC	PI	TC	PI	TC	PI	TC	PI	TC	PI
	℃ DB	℃ WB	kW	kW	kW	kW	kW	kW	kW	kW	kW	kW	kW	kW
90%	-19.8	-20.0	62.9	32.61	62.7	33.82	62.6	34.17	62.3	34.90	62.2	35.58	62.1	36.78
	-18.8	-19.0	82.3	42.51	82.1	43.90	82.1	44.57	82.1	45.49	82.0	46.38	76.8	45.20
	-16.7	-17.0	83.7	42.63	83.5	44.09	83.5	44.48	83.5	45.38	83.4	46.42	76.9	44.23
	-13.7	-15.0	85.2	42.62	85.1	44.06	84.9	44.32	85.0	44.94	84.1	45.73	77.0	43.22
	-11.8	-13.0	86.5	42.57	86.4	43.73	86.3	44.12	86.3	44.93	84.1	44.55	77.0	42.21
	-9.8	-11.0	87.9	42.26	87.9	43.33	87.7	43.66	87.5	44.32	84.3	43.39	77.2	41.04
	-9.5	-10.0	88.6	42.06	88.6	43.29	88.4	43.39	87.7	43.90	84.3	42.91	77.2	40.36
	-8.5	-9.1	89.3	41.97	89.1	42.90	89.1	43.23	87.7	43.19	84.3	42.21	77.2	39.66
	-7.0	-7.6	90.2	41.58	90.0	42.44	90.0	42.77	87.5	42.22	84.1	41.20	77.0	37.81
	-5.0	-5.6	95.8	42.83	95.6	43.82	90.3	41.50	87.0	40.53	83.6	39.06	76.6	35.35
	-3.0	-3.7	97.0	42.19	96.9	38.34	90.3	39.96	87.0	38.43	83.6	36.81	76.6	33.32
	0.0	-0.7	98.9	40.86	97.1	35.82	90.3	36.32	87.0	34.94	83.6	33.48	76.6	30.33
	3.0	2.2	101.8	38.94	97.1	36.62	90.3	33.13	87.0	31.90	83.6	30.57	76.6	27.75
	5.0	4.1	103.9	37.37	97.1	34.45	90.3	31.25	87.0	30.06	83.6	28.86	76.6	26.18
	7.0	6.0	103.9	35.13	97.1	32.46	90.3	29.46	87.0	28.39	83.6	27.23	76.6	24.74
	9.0	7.9	103.9	33.11	97.1	30.55	90.3	27.79	87.0	26.81	83.6	25.73	76.6	23.39
	11.0	9.8	103.9	31.19	97.1	28.82	90.3	26.29	87.0	25.35	83.6	24.31	76.6	22.16
	13.0	11.8	103.9	29.35	97.1	27.19	90.3	24.79	87.0	23.93	83.6	22.98	76.6	20.93
	15.0	13.7	103.9	27.74	97.1	25.68	90.3	23.50	87.0	22.59	83.6	21.78	76.6	19.87
	18.0	16.8	103.9	27.67	97.1	25.61	90.3	23.44	87.0	22.54	83.6	21.72	76.6	19.82
	20.0	18.5	103.9	27.57	97.1	25.52	90.3	23.36	87.0	22.46	83.6	21.65	76.6	19.75
	24.0	20.5	103.9	27.45	97.1	25.41	90.3	23.26	87.0	22.36	83.6	21.55	76.6	19.66
80%	-19.8	-20.0	62.6	34.91	62.6	36.05	62.4	36.11	62.2	36.71	62.1	37.50	61.8	38.51
	-18.8	-19.0	82.0	45.41	81.9	46.70	80.6	46.34	77.6	45.44	74.6	44.47	68.4	42.29
	-16.7	-17.0	83.4	45.35	83.3	46.73	80.6	45.41	77.6	44.47	74.7	43.51	68.5	41.25
	-13.7	-15.0	85.0	45.24	84.8	46.46	80.8	44.40	77.8	43.42	74.8	42.66	68.6	40.24
	-11.8	-13.0	86.3	45.02	86.1	46.00	80.8	43.38	77.8	42.41	74.8	41.47	68.6	38.34
	-9.8	-11.0	87.8	44.53	87.0	45.16	80.9	42.20	77.9	41.20	74.9	40.05	68.7	36.28
	-9.5	-10.0	88.5	44.24	87.1	44.65	81.0	41.51	77.9	40.56	75.0	38.92	68.7	35.24
	-8.5	-9.1	89.0	44.00	87.1	43.96	81.0	41.00	77.9	39.58	75.0	37.89	68.7	34.31
	-7.0	-7.6	89.9	43.52	86.9	42.91	80.8	39.34	77.8	37.72	74.8	36.15	68.6	32.88
	-5.0	-5.6	92.5	38.56	86.4	40.91	80.3	36.78	77.3	35.29	74.4	33.81	68.2	30.67
	-3.0	-3.7	92.5	37.29	86.4	38.51	80.3	34.66	77.3	33.42	74.4	31.90	68.2	28.98
	0.0	-0.7	92.5	37.92	86.4	34.96	80.3	31.60	77.3	30.36	74.4	29.08	68.2	26.45
	3.0	2.2	92.5	34.55	86.4	31.89	80.3	28.91	77.3	27.76	74.4	26.65	68.2	24.25
	5.0	4.1	92.5	32.53	86.4	30.07	80.3	27.29	77.3	26.22	74.4	25.20	68.2	22.94
	7.0	6.0	92.5	30.65	86.4	28.42	80.3	25.79	77.3	24.80	74.4	23.83	68.2	21.71
	9.0	7.9	92.5	28.94	86.4	26.78	80.3	24.51	77.3	23.43	74.4	22.54	68.2	20.57
	11.0	9.8	92.5	27.32	86.4	25.31	80.3	23.09	77.3	22.19	74.4	21.34	68.2	19.51
	13.0	11.8	92.5	25.75	86.4	23.89	80.3	21.84	77.3	20.99	74.4	20.18	68.2	18.45
	15.0	13.7	92.5	24.36	86.4	22.65	80.3	20.72	77.3	19.91	74.4	19.15	68.2	17.56
	18.0	16.8	92.5	24.30	86.4	22.59	80.3	20.67	77.3	19.86	74.4	19.10	68.2	17.51
	20.0	18.5	92.5	24.21	86.4	22.51	80.3	20.60	77.3	19.79	74.4	19.04	68.2	17.45
	24.0	20.5	92.5	24.10	86.4	22.41	80.3	20.51	77.3	19.71	74.4	18.96	68.2	17.38

TC—Total capacity of outdoor unit; PI—Power input of outdoor unit														
Connection ratio	Outdoor air temp.（℃）		Indoor air temp.（℃ DB）											
			16		18		20		21		22		24	
			TC	PI	TC	PI	TC	PI	TC	PI	TC	PI	TC	PI
	℃ DB	℃ WB	kW	kW	kW	kW	kW	kW	kW	kW	kW	kW	kW	kW
70%	-19.8	-20.0	62.4	37.21	62.2	38.15	62.0	37.96	61.6	38.32	60.8	38.49	59.0	38.08
	-18.8	-19.0	81.3	48.14	76.0	46.01	70.6	42.91	68.0	41.97	65.3	40.99	59.9	37.87
	-16.7	-17.0	81.3	47.09	76.0	44.99	70.7	41.92	68.1	40.99	65.4	39.90	59.9	36.18
	-13.7	-15.0	81.5	46.01	76.2	44.10	70.8	40.90	68.2	4.48	65.5	38.02	60.0	34.47
	-11.8	-13.0	81.5	44.93	76.2	42.81	70.8	39.04	68.2	37.66	65.5	36.06	60.0	32.69
	-9.8	-11.0	81.6	43.63	76.3	41.23	70.9	36.98	68.3	35.67	65.6	34.14	60.1	31.00
	-9.5	-10.0	81.7	42.95	76.3	40.05	71.0	35.94	68.3	34.66	65.6	33.22	60.2	30.16
	-8.5	-9.1	81.7	42.31	76.3	38.97	71.0	35.00	68.3	33.76	65.6	32.36	60.2	29.40
	-7.0	-7.6	81.5	40.33	76.2	37.15	70.8	33.45	68.2	32.28	65.5	30.92	60.0	28.11
	-5.0	-5.6	81.0	37.67	75.7	34.76	70.4	31.35	67.8	30.22	65.1	28.95	59.7	26.38
	-3.0	-3.7	81.0	35.47	75.7	32.76	70.4	29.61	67.8	28.55	65.1	27.37	59.7	24.94
	0.0	-0.7	81.0	32.29	75.7	30.01	70.4	27.06	67.8	26.12	65.1	25.06	59.7	22.86
	3.0	2.2	81.0	29.50	75.7	27.36	70.4	24.84	67.8	23.97	65.1	23.01	59.7	21.00
	5.0	4.1	81.0	27.84	75.7	25.79	70.4	23.51	67.8	22.68	65.1	21.81	59.7	19.89
	7.0	6.0	81.0	26.32	75.7	24.41	70.4	22.23	67.8	21.48	65.1	20.65	59.7	18.87
	9.0	7.9	81.0	24.88	75.7	23.08	70.4	21.07	67.8	20.36	65.1	19.57	59.7	17.90
	11.0	9.8	81.0	23.53	75.7	21.83	70.4	20.00	67.8	19.33	65.1	18.58	59.7	17.00
	13.0	11.8	81.0	22.23	75.7	20.68	70.4	18.92	67.8	18.33	65.1	17.59	59.7	16.15
	15.0	13.7	81.0	21.07	75.7	19.61	70.4	17.98	67.8	17.43	65.1	16.73	59.7	15.39
	18.0	16.8	81.0	21.01	75.7	19.56	70.4	17.93	67.8	17.38	65.1	16.69	59.7	15.35
	20.0	18.5	81.0	20.94	75.7	19.49	70.4	17.87	67.8	17.32	65.1	16.63	59.7	15.30
	24.0	20.5	81.0	20.85	75.7	19.41	70.4	17.79	67.8	17.25	65.1	16.56	59.7	15.23
60%	-19.8	-20.0	63.0	40.06	60.0	39.04	56.3	35.66	54.6	34.50	52.4	33.04	48.1	30.00
	-18.8	-19.0	69.8	43.98	65.1	41.77	60.5	37.52	58.3	36.04	56.1	34.59	51.3	31.33
	-16.7	-17.0	69.8	42.89	65.2	40.09	60.6	35.88	58.3	34.47	56.1	33.10	51.4	30.02
	-13.7	-15.0	70.0	41.51	65.3	38.16	60.7	34.22	58.5	32.89	56.3	31.59	51.5	28.64
	-11.8	-13.0	70.0	39.29	65.3	36.15	60.7	32.48	58.5	31.23	56.3	30.01	51.5	27.24
	-9.8	-11.0	70.1	37.18	65.4	34.23	60.8	30.83	58.5	29.61	56.3	28.47	51.6	25.88
	-9.5	-10.0	70.1	36.15	65.4	33.30	60.8	29.99	58.6	28.86	56.4	27.71	51.6	25.17
	-8.5	-9.1	70.1	35.20	65.4	32.45	60.8	29.27	58.6	28.13	56.4	27.02	51.6	24.58
	-7.0	-7.6	70.0	33.59	65.3	31.00	60.7	27.97	58.5	26.92	56.3	25.85	51.5	23.56
	-5.0	-5.6	69.6	31.45	64.9	29.04	60.4	26.28	58.1	25.28	55.9	24.29	51.2	22.15
	-3.0	-3.7	69.6	29.70	64.9	27.44	60.4	24.96	58.1	23.96	55.9	23.01	51.2	20.97
	0.0	-0.7	69.6	27.13	64.9	25.12	60.4	22.83	58.1	21.99	55.9	21.13	51.2	19.28
	3.0	2.2	69.6	24.88	64.9	23.07	60.4	21.03	58.1	20.24	55.9	19.50	51.2	17.80
	5.0	4.1	69.6	23.53	64.9	21.83	60.4	19.92	58.1	19.21	55.9	18.47	51.2	16.91
	7.0	6.0	69.6	22.27	64.9	20.67	60.4	18.89	58.1	18.22	55.9	17.57	51.2	16.06
	9.0	7.9	69.6	21.09	64.9	19.60	60.4	17.94	58.1	17.32	55.9	16.67	51.2	15.30
	11.0	9.8	69.6	20.01	64.9	18.62	60.4	17.08	58.1	16.46	55.9	15.85	51.2	14.58
	13.0	11.8	69.6	18.93	64.9	17.64	60.4	16.22	58.1	15.64	55.9	15.08	51.2	13.86
	15.0	13.7	69.6	18.03	64.9	16.75	60.4	15.44	58.1	14.91	55.9	14.39	51.2	13.22
	18.0	16.8	69.6	17.98	64.9	16.71	60.4	15.41	58.1	14.87	55.9	14.35	51.2	13.19
	20.0	18.5	69.6	17.92	64.9	16.65	60.4	15.35	58.1	14.82	55.9	14.31	51.2	13.14
	24.0	20.5	69.6	17.84	64.9	16.58	60.4	15.29	58.1	14.76	55.9	14.24	51.2	13.08

GMV X DC Inverter VRF Units

TC—Total capacity of outdoor unit; PI—Power input of outdoor unit														
Connection ratio	Outdoor air temp.（℃）		Indoor air temp.（℃ DB）											
			16		18		20		21		22		24	
			TC	PI	TC	PI	TC	PI	TC	PI	TC	PI	TC	PI
	℃ DB	℃ WB	kW	kW	kW	kW	kW	kW	kW	kW	kW	kW	kW	kW
50%	-19.8	-20.0	53.6	34.31	50.5	31.84	46.7	28.38	45.2	27.69	43.3	26.45	40.8	24.78
	-18.8	-19.0	58.1	36.39	54.3	33.58	50.6	30.16	48.7	29.17	46.7	27.98	42.9	25.56
	-16.7	-17.0	58.2	34.76	54.4	32.10	50.6	28.89	48.7	27.96	46.8	26.86	42.9	24.52
	-13.7	-15.0	58.3	33.16	54.5	30.64	50.7	27.59	48.8	26.73	46.9	25.67	43.0	23.46
	-11.8	-13.0	58.3	31.49	54.5	29.17	50.7	26.28	48.8	25.45	46.9	24.43	43.0	22.36
	-9.8	-11.0	58.4	29.86	54.6	27.65	50.8	25.00	48.9	24.20	47.0	23.26	43.1	21.28
	-9.5	-10.0	58.4	29.06	54.6	26.90	50.8	24.37	48.9	23.61	47.0	22.67	43.1	20.73
	-8.5	-9.1	58.4	28.34	54.6	26.27	50.8	23.77	48.9	23.05	47.0	22.15	43.1	20.26
	-7.0	-7.6	58.3	27.11	54.5	25.24	50.7	22.79	48.8	22.10	46.9	21.25	43.0	19.46
	-5.0	-5.6	57.9	25.42	54.2	23.62	50.4	21.46	48.5	20.82	46.6	20.01	42.8	18.32
	-3.0	-3.7	57.9	24.07	54.2	22.38	50.4	20.36	48.5	19.75	46.6	18.98	42.8	17.43
	0.0	-0.7	57.9	22.10	54.2	20.55	50.4	18.78	48.5	18.20	46.6	17.52	42.8	16.11
	3.0	2.2	57.9	20.35	54.2	18.95	50.4	17.33	48.5	16.82	46.6	16.23	42.8	14.92
	5.0	4.1	57.9	19.32	54.2	17.98	50.4	16.47	48.5	16.00	46.6	15.41	42.8	14.19
	7.0	6.0	57.9	18.33	54.2	17.09	50.4	15.70	48.5	15.23	46.6	14.68	42.8	13.55
	9.0	7.9	57.9	17.39	54.2	16.24	50.4	14.93	48.5	14.54	46.6	13.99	42.8	12.91
	11.0	9.8	57.9	16.53	54.2	15.44	50.4	14.24	48.5	13.84	46.6	13.34	42.8	12.31
	13.0	11.8	57.9	15.72	54.2	14.69	50.4	13.55	48.5	13.20	46.6	12.70	42.8	11.76
	15.0	13.7	57.9	14.96	54.2	14.02	50.4	12.95	48.5	12.59	46.6	12.13	42.8	11.20
	18.0	16.8	57.9	14.92	54.2	13.98	50.4	12.91	48.5	12.56	46.6	12.10	42.8	11.18
	20.0	18.5	57.9	14.87	54.2	13.94	50.4	12.87	48.5	12.51	46.6	12.06	42.8	11.14
	24.0	20.5	57.9	14.81	54.2	13.87	50.4	12.81	48.5	12.46	46.6	12.01	42.8	11.09

GMV-952WM/B-X(P)

TC—Total capacity of outdoor unit; PI—Power input of outdoor unit														
Connection ratio	Outdoor air temp.（℃）		Indoor air temp.（℃ DB）											
			16		18		20		21		22		24	
			TC	PI	TC	PI	TC	PI	TC	PI	TC	PI	TC	PI
	℃ DB	℃ WB	kW	kW	kW	kW	kW	kW	kW	kW	kW	kW	kW	kW
135%	-19.8	-20.0	67.5	25.12	67.4	26.94	67.2	28.30	67.1	29.22	66.9	30.27	66.8	32.09
	-18.8	-19.0	68.1	25.52	68.0	27.34	67.8	28.50	67.5	29.47	67.4	30.33	67.3	32.28
	-16.7	-17.0	69.4	26.19	69.1	27.84	68.9	29.05	68.6	29.68	68.6	30.70	68.4	32.50
	-13.7	-15.0	70.6	26.77	70.5	28.37	70.2	29.45	70.0	30.17	69.8	31.13	69.7	32.71
	-11.8	-13.0	71.7	27.28	71.5	28.68	71.3	29.62	71.2	30.54	71.1	31.32	70.9	32.85
	-9.8	-11.0	75.6	28.71	75.4	30.12	75.0	30.93	74.5	31.53	74.1	32.14	73.6	33.49
	-9.5	-10.0	77.5	29.29	76.9	30.53	76.3	31.25	75.9	31.85	75.7	32.60	75.4	33.90
	-8.5	-9.1	79.4	29.96	78.4	30.99	77.9	31.59	77.3	32.21	77.0	32.83	76.8	34.26
	-7.0	-7.6	80.6	30.23	80.4	31.41	80.1	32.16	80.1	32.86	79.8	33.57	79.5	34.95
	-5.0	-5.6	86.2	31.89	85.6	32.32	84.8	33.44	84.5	34.03	84.1	34.64	83.8	35.82
	-3.0	-3.7	89.9	32.80	89.0	33.70	88.7	34.18	88.4	34.88	88.1	35.43	87.8	36.65
	0.0	-0.7	96.9	34.33	95.5	34.91	95.3	35.44	95.3	36.05	94.9	36.66	94.9	37.79
	3.0	2.2	105.6	36.10	105.0	37.00	103.1	36.89	102.7	37.30	102.7	37.91	102.4	38.96
	5.0	4.1	109.6	36.58	109.2	37.48	108.6	37.67	108.2	38.20	107.9	38.67	107.5	39.63
	7.0	6.0	115.0	37.40	114.7	38.26	114.0	38.41	113.5	34.68	113.5	39.37	109.7	38.21
	9.0	7.9	120.5	38.08	120.1	38.89	119.7	39.06	119.4	39.59	117.1	38.92	109.7	35.92
	11.0	9.8	126.1	38.67	125.8	39.43	125.4	39.51	121.2	38.09	117.2	36.61	109.7	33.84
	13.0	11.8	132.7	39.37	132.5	40.13	125.8	37.18	121.2	35.71	117.2	34.38	109.7	31.76
	15.0	13.7	139.1	40.04	133.7	38.19	125.8	35.05	121.2	33.69	117.2	32.41	109.7	29.98
	18.0	16.8	139.1	39.93	133.7	38.08	125.8	34.95	121.2	33.60	117.2	32.32	109.7	29.90
	20.0	18.5	139.1	39.78	133.7	37.94	125.8	34.82	121.2	33.48	117.2	32.20	109.7	29.79
	24.0	20.5	139.1	39.59	133.7	37.76	125.8	34.66	121.2	33.33	117.2	32.05	109.7	29.66
120%	-19.8	-20.0	67.4	27.59	67.3	29.28	67.0	30.44	66.7	31.19	66.6	32.09	66.5	33.97
	-18.8	-19.0	68.0	27.94	67.9	29.62	67.6	30.26	67.3	31.47	67.1	32.31	67.1	34.15
	-16.7	-17.0	69.1	28.43	69.0	30.03	68.7	30.85	68.5	31.73	68.5	32.60	68.1	34.19
	-13.7	-15.0	70.3	28.86	70.2	30.33	70.0	31.22	69.7	31.93	69.7	32.76	69.6	34.36
	-11.8	-13.0	71.4	29.24	71.4	30.54	71.1	31.35	70.9	32.04	70.9	32.91	70.8	34.28
	-9.8	-11.0	75.5	30.63	75.3	31.91	74.7	32.39	74.5	33.21	74.1	33.74	73.4	34.99
	-9.5	-10.0	77.2	31.12	76.6	32.26	76.1	32.79	75.7	33.36	75.2	33.63	75.2	35.36
	-8.5	-9.1	78.8	31.64	78.1	32.68	77.7	33.14	77.2	33.74	76.9	34.36	76.6	35.68
	-7.0	-7.6	80.5	32.00	80.2	33.04	79.8	33.58	79.8	34.26	79.7	35.01	79.4	36.15
	-5.0	-5.6	86.1	33.55	85.5	34.55	84.8	34.93	84.5	35.48	84.1	35.98	83.7	37.11
	-3.0	-3.7	89.0	34.09	88.5	34.99	88.0	35.34	87.8	35.90	87.7	36.63	87.6	37.70
	0.0	-0.7	96.7	35.81	95.4	36.28	94.9	37.04	94.9	37.21	94.8	37.85	94.6	38.88
	3.0	2.2	105.2	37.41	104.6	38.22	103.0	37.95	102.7	38.53	102.4	38.96	101.4	39.32
	5.0	4.1	109.3	37.84	108.9	38.65	108.5	38.80	108.2	39.35	107.9	39.78	101.2	36.84
	7.0	6.0	114.7	38.57	113.9	39.08	113.8	39.41	112.9	39.32	107.7	37.28	100.6	34.49
	9.0	7.9	120.3	39.24	119.6	39.87	116.2	38.24	113.3	37.10	107.7	35.07	100.6	32.47
	11.0	9.8	125.8	39.74	122.6	39.00	117.6	36.43	113.6	35.03	107.7	33.02	100.6	30.61
	13.0	11.8	130.2	39.31	122.6	36.58	117.6	34.19	113.6	32.91	107.7	31.05	100.6	28.79
	15.0	13.7	130.2	37.02	122.6	34.46	117.6	32.28	113.6	31.04	107.7	29.30	100.6	27.18
	18.0	16.8	130.2	36.91	122.6	34.36	117.6	32.19	113.6	30.95	107.7	29.22	100.6	27.11
	20.0	18.5	130.2	36.78	122.6	34.24	117.6	32.08	113.6	30.84	107.7	29.11	100.6	27.02
	24.0	20.5	130.2	36.60	122.6	34.08	117.6	31.93	113.6	30.70	107.7	28.98	100.6	26.90

GMV X DC Inverter VRF Units

TC—Total capacity of outdoor unit; PI—Power input of outdoor unit														
Connection ratio	Outdoor air temp.（℃）		Indoor air temp.（℃ DB）											
			16		18		20		21		22		24	
			TC	PI	TC	PI	TC	PI	TC	PI	TC	PI	TC	PI
	℃ DB	℃ WB	kW	kW	kW	kW	kW	kW	kW	kW	kW	kW	kW	kW
110%	-19.8	-20.0	67.1	30.10	67.1	31.64	66.9	32.59	66.8	33.41	66.6	34.20	66.5	35.96
	-18.8	-19.0	67.8	30.37	67.7	31.76	67.5	32.65	67.2	33.35	66.9	34.24	66.9	35.81
	-16.7	-17.0	69.0	30.71	68.9	32.19	68.6	32.84	68.3	33.64	68.3	34.46	68.0	35.99
	-13.7	-15.0	70.2	31.00	70.1	32.39	69.8	33.08	69.5	33.72	69.5	34.49	69.5	36.03
	-11.8	-13.0	71.3	31.28	71.1	32.41	70.9	33.03	70.7	33.65	70.7	34.51	70.5	35.81
	-9.8	-11.0	75.2	32.51	75.0	33.71	74.9	34.21	74.9	35.05	74.1	35.37	73.9	36.58
	-9.5	-10.0	76.8	32.89	78.4	34.87	78.3	35.51	78.3	36.19	77.4	36.51	75.4	36.94
	-8.5	-9.1	78.7	33.49	79.1	34.93	78.9	35.34	78.9	36.00	77.9	36.38	76.9	37.12
	-7.0	-7.6	80.2	33.72	80.1	34.68	79.8	35.16	79.8	35.81	78.8	35.59	78.4	37.11
	-5.0	-5.6	85.9	35.26	85.7	36.32	85.5	36.73	85.4	37.35	84.2	35.78	84.1	38.70
	-3.0	-3.7	88.8	35.70	92.0	37.94	91.9	38.40	91.8	39.00	90.5	36.20	89.1	39.67
	0.0	-0.7	96.4	37.24	95.2	37.65	94.6	37.83	98.1	39.79	96.6	38.17	94.0	39.21
	3.0	2.2	105.0	38.81	106.4	40.27	106.2	40.40	105.1	40.61	101.6	39.08	94.0	35.70
	5.0	4.1	108.9	39.05	116.5	42.63	109.2	39.81	107.6	39.11	102.5	37.09	94.0	33.59
	7.0	6.0	114.5	39.78	116.5	41.07	112.4	38.51	108.3	37.00	102.5	34.88	94.0	31.62
	9.0	7.9	119.9	40.27	116.5	38.61	112.7	36.34	108.4	34.88	102.5	32.84	94.0	29.81
	11.0	9.8	119.9	37.88	116.5	36.32	112.7	34.23	108.4	32.89	102.5	30.97	94.0	28.14
	13.0	11.8	119.9	35.53	116.5	34.08	112.7	32.19	108.4	30.94	102.5	29.14	94.0	26.50
	15.0	13.7	119.9	33.48	116.5	32.14	112.7	30.42	108.4	29.21	102.5	27.58	94.0	25.08
	18.0	16.8	119.9	33.39	116.5	32.06	112.7	30.34	108.4	29.14	102.5	27.51	94.0	25.02
	20.0	18.5	119.9	33.27	116.5	31.94	112.7	30.23	108.4	29.03	102.5	27.41	94.0	24.93
	24.0	20.5	119.9	33.11	116.5	31.80	112.7	30.10	108.4	28.90	102.5	27.29	94.0	24.82
100%	-19.8	-20.0	66.8	32.43	66.6	33.86	66.5	34.46	66.2	35.31	66.1	36.03	65.8	37.58
	-18.8	-19.0	67.4	32.66	67.3	33.91	67.1	34.63	66.8	35.30	66.6	36.19	66.3	37.50
	-16.7	-17.0	68.5	32.86	68.5	34.25	68.3	34.69	68.0	35.30	67.7	36.09	67.4	37.33
	-13.7	-15.0	69.7	33.00	69.7	34.32	69.5	34.69	69.2	35.44	68.9	35.99	68.5	37.27
	-11.8	-13.0	70.9	33.19	70.8	34.19	70.5	34.65	70.3	35.19	69.9	34.48	69.8	37.07
	-9.8	-11.0	74.8	34.33	74.6	35.44	74.4	35.69	74.5	36.41	73.9	36.92	73.4	37.84
	-9.5	-10.0	78.3	35.52	78.0	36.60	77.9	36.91	77.9	37.70	77.2	38.05	74.6	38.09
	-8.5	-9.1	78.7	35.41	78.6	36.39	78.4	36.74	78.3	37.37	77.7	37.86	76.4	38.37
	-7.0	-7.6	79.5	35.20	79.5	36.19	79.4	36.53	79.3	37.10	79.3	37.70	79.1	38.90
	-5.0	-5.6	84.4	36.38	84.2	37.30	84.1	37.53	83.8	38.15	83.3	38.48	83.3	39.53
	-3.0	-3.7	90.7	38.17	90.5	38.93	90.2	39.20	89.8	39.60	88.2	39.45	86.3	38.74
	0.0	-0.7	94.7	38.11	94.6	38.86	94.6	39.15	93.9	38.99	90.2	37.24	86.3	35.24
	3.0	2.2	104.5	40.04	104.0	40.68	100.7	38.20	97.0	36.63	93.1	35.04	86.3	32.08
	5.0	4.1	111.2	41.30	107.9	39.64	101.8	36.33	98.0	34.87	93.1	33.01	86.3	30.27
	7.0	6.0	111.2	38.97	107.9	37.27	106.0	31.60	98.0	32.85	93.1	31.10	86.3	28.53
	9.0	7.9	111.2	36.61	107.9	35.07	106.0	33.33	98.0	30.97	93.1	29.32	86.3	26.93
	11.0	9.8	111.2	34.47	107.9	33.05	106.0	31.49	98.0	29.21	93.1	27.68	86.3	25.46
	13.0	11.8	111.2	32.38	107.9	31.07	106.0	29.68	98.0	27.54	93.1	26.11	86.3	24.02
	15.0	13.7	111.2	30.54	107.9	29.32	106.0	28.05	98.0	26.04	93.1	24.68	86.3	22.77
	18.0	16.8	111.2	30.46	107.9	29.25	106.0	27.98	98.0	25.98	93.1	24.62	86.3	22.71
	20.0	18.5	111.2	30.35	107.9	29.14	106.0	27.88	98.0	25.89	93.1	24.53	86.3	22.63
	24.0	20.5	111.2	30.21	107.9	29.01	106.0	27.76	98.0	25.77	93.1	24.42	86.3	22.53

TC—Total capacity of outdoor unit; PI—Power input of outdoor unit														
Connection ratio	Outdoor air temp.（℃）		Indoor air temp.（℃ DB）											
			16		18		20		21		22		24	
			TC	PI	TC	PI	TC	PI	TC	PI	TC	PI	TC	PI
	℃ DB	℃ WB	kW	kW	kW	kW	kW	kW	kW	kW	kW	kW	kW	kW
90%	-19.8	-20.0	66.6	34.93	66.5	36.23	66.4	36.60	66.1	37.38	66.0	38.12	65.8	39.40
	-18.8	-19.0	87.2	45.53	87.0	47.02	87.0	47.74	87.0	48.73	87.0	49.68	81.4	48.42
	-16.7	-17.0	88.7	45.66	88.5	47.23	88.5	47.64	88.5	48.61	88.4	49.73	81.5	47.37
	-13.7	-15.0	90.3	45.66	90.2	47.20	90.0	47.47	90.1	48.14	89.2	48.99	81.7	46.30
	-11.8	-13.0	91.7	45.60	91.6	46.84	91.4	47.26	91.5	48.13	89.2	47.72	81.7	45.22
	-9.8	-11.0	93.2	45.27	93.2	46.42	93.0	46.77	92.7	47.48	89.3	46.48	81.8	43.96
	-9.5	-10.0	94.0	45.05	93.9	46.37	93.7	46.48	92.9	47.02	89.4	45.96	81.8	43.24
	-8.5	-9.1	94.7	44.96	94.5	45.95	94.4	46.31	92.9	46.26	89.4	45.21	81.8	42.49
	-7.0	-7.6	95.6	44.54	95.4	45.46	95.3	45.82	92.7	45.22	89.2	44.14	81.7	40.50
	-5.0	-5.6	101.5	45.88	101.4	46.94	95.8	44.45	92.2	43.42	88.7	41.84	81.2	37.87
	-3.0	-3.7	102.8	45.19	102.7	41.07	95.8	42.81	92.2	41.17	88.7	39.43	81.2	35.70
	0.0	-0.7	104.9	43.77	102.9	38.38	95.8	38.90	92.2	37.42	88.7	35.86	81.2	32.49
	3.0	2.2	107.9	41.71	102.9	39.23	95.8	35.49	92.2	34.18	88.7	32.75	81.2	29.72
	5.0	4.1	110.1	40.03	102.9	36.90	95.8	33.48	92.2	32.20	88.7	30.91	81.2	28.05
	7.0	6.0	110.1	37.63	102.9	34.77	95.8	31.56	92.2	30.41	88.7	29.17	81.2	26.50
	9.0	7.9	110.1	35.47	102.9	32.73	95.8	29.77	92.2	28.71	88.7	27.56	81.2	25.05
	11.0	9.8	110.1	33.41	102.9	30.88	95.8	28.16	92.2	27.15	88.7	26.04	81.2	23.73
	13.0	11.8	110.1	31.44	102.9	29.12	95.8	26.56	92.2	25.63	88.7	24.62	81.2	22.42
	15.0	13.7	110.1	29.71	102.9	27.51	95.8	25.18	92.2	24.20	88.7	23.33	81.2	21.28
	18.0	16.8	110.1	29.64	102.9	27.44	95.8	25.11	92.2	24.14	88.7	23.27	81.2	21.23
	20.0	18.5	110.1	29.53	102.9	27.34	95.8	25.03	92.2	24.06	88.7	23.19	81.2	21.15
	24.0	20.5	110.1	29.40	102.9	27.22	95.8	24.92	92.2	23.95	88.7	23.09	81.2	21.06
80%	-19.8	-20.0	66.4	37.39	66.4	38.62	66.1	38.68	66.0	39.32	65.8	40.17	65.5	41.25
	-18.8	-19.0	86.9	48.64	86.8	50.02	85.4	49.64	82.2	48.68	79.1	47.64	72.5	45.30
	-16.7	-17.0	88.4	48.58	88.3	50.06	85.5	48.65	82.3	47.63	79.1	46.60	72.6	44.19
	-13.7	-15.0	90.1	48.46	89.9	49.77	85.6	47.56	82.5	46.51	79.3	45.69	72.7	43.10
	-11.8	-13.0	91.5	48.22	91.3	49.27	85.6	46.47	82.5	45.43	79.3	44.42	72.7	41.07
	-9.8	-11.0	93.0	47.70	92.3	48.37	85.8	45.21	82.6	44.13	79.4	42.90	72.8	38.87
	-9.5	-10.0	93.8	47.39	92.3	47.83	85.8	44.47	82.6	43.45	79.5	41.69	72.9	37.75
	-8.5	-9.1	94.3	47.14	92.3	47.09	85.8	43.92	82.6	42.40	79.5	40.59	72.9	36.75
	-7.0	-7.6	95.3	46.61	92.1	45.96	85.6	42.14	82.5	40.40	79.3	38.73	72.7	35.23
	-5.0	-5.6	98.0	41.31	91.6	43.82	85.1	39.40	82.0	37.80	78.8	36.22	72.3	32.85
	-3.0	-3.7	98.0	39.95	91.6	41.25	85.1	37.13	82.0	35.80	78.8	34.17	72.3	31.04
	0.0	-0.7	98.0	40.62	91.6	37.45	85.1	33.85	82.0	32.52	78.8	31.16	72.3	28.33
	3.0	2.2	98.0	37.01	91.6	34.16	85.1	30.97	82.0	29.73	78.8	28.55	72.3	25.98
	5.0	4.1	98.0	34.85	91.6	32.21	85.1	29.23	82.0	28.08	78.8	26.99	72.3	24.57
	7.0	6.0	98.0	32.83	91.6	30.45	85.1	27.63	82.0	26.57	78.8	25.52	72.3	23.26
	9.0	7.9	98.0	31.00	91.6	28.69	85.1	26.25	82.0	25.10	78.8	24.15	72.3	22.03
	11.0	9.8	98.0	29.27	91.6	27.11	85.1	24.73	82.0	23.77	78.8	22.86	72.3	20.90
	13.0	11.8	98.0	27.58	91.6	25.59	85.1	23.40	82.0	22.48	78.8	21.62	72.3	19.76
	15.0	13.7	98.0	26.09	91.6	24.26	85.1	22.20	82.0	21.33	78.8	20.52	72.3	18.81
	18.0	16.8	98.0	26.03	91.6	24.20	85.1	22.14	82.0	21.28	78.8	20.46	72.3	18.76
	20.0	18.5	98.0	25.93	91.6	24.11	85.1	22.07	82.0	21.20	78.8	20.39	72.3	18.70
	24.0	20.5	98.0	25.82	91.6	24.01	85.1	21.97	82.0	21.11	78.8	20.31	72.3	18.61

GMV X DC Inverter VRF Units

TC—Total capacity of outdoor unit; PI—Power input of outdoor unit														
Connection ratio	Outdoor air temp.（℃）		Indoor air temp.（℃ DB）											
			16		18		20		21		22		24	
			TC	PI	TC	PI	TC	PI	TC	PI	TC	PI	TC	PI
	℃ DB	℃ WB	kW	kW	kW	kW	kW	kW	kW	kW	kW	kW	kW	kW
70%	-19.8	-20.0	66.1	39.85	66.0	40.86	65.7	40.66	65.3	41.05	64.4	41.23	62.5	40.79
	-18.8	-19.0	86.1	51.56	80.5	49.28	74.9	45.96	72.1	44.96	69.2	43.91	63.5	40.57
	-16.7	-17.0	86.2	50.44	80.6	48.19	74.9	44.91	72.1	43.91	69.3	42.74	63.5	38.75
	-13.7	-15.0	86.4	49.29	80.7	47.24	75.1	43.82	72.3	4.80	69.4	40.72	63.6	36.93
	-11.8	-13.0	86.4	48.13	80.7	45.85	75.1	41.82	72.3	40.34	69.4	38.62	63.6	35.02
	-9.8	-11.0	86.5	46.74	80.9	44.17	75.2	39.62	72.4	38.21	69.5	36.57	63.7	33.20
	-9.5	-10.0	86.6	46.01	80.9	42.90	75.2	38.50	72.4	37.13	69.5	35.58	63.8	32.31
	-8.5	-9.1	86.6	45.33	80.9	41.75	75.2	37.50	72.4	36.16	69.5	34.66	63.8	31.49
	-7.0	-7.6	86.4	43.21	80.7	39.80	75.1	35.83	72.3	34.58	69.4	33.12	63.6	30.11
	-5.0	-5.6	85.9	40.35	80.3	37.23	74.6	33.58	71.9	32.37	69.0	31.01	63.3	28.25
	-3.0	-3.7	85.9	38.00	80.3	35.09	74.6	31.71	71.9	30.59	69.0	29.32	63.3	26.71
	0.0	-0.7	85.9	34.59	80.3	32.14	74.6	28.98	71.9	27.97	69.0	26.85	63.3	24.49
	3.0	2.2	85.9	31.60	80.3	29.30	74.6	26.61	71.9	25.68	69.0	24.64	63.3	22.49
	5.0	4.1	85.9	29.83	80.3	27.62	74.6	25.19	71.9	24.30	69.0	23.36	63.3	21.31
	7.0	6.0	85.9	28.19	80.3	26.15	74.6	23.81	71.9	23.01	69.0	22.12	63.3	20.22
	9.0	7.9	85.9	26.65	80.3	24.72	74.6	22.57	71.9	21.81	69.0	20.97	63.3	19.17
	11.0	9.8	85.9	25.21	80.3	23.39	74.6	21.42	71.9	20.70	69.0	19.91	63.3	18.21
	13.0	11.8	85.9	23.82	80.3	22.15	74.6	20.27	71.9	19.64	69.0	18.85	63.3	17.30
	15.0	13.7	85.9	22.57	80.3	21.01	74.6	19.26	71.9	18.67	69.0	17.92	63.3	16.48
	18.0	16.8	85.9	22.51	80.3	20.95	74.6	19.21	71.9	18.62	69.0	17.88	63.3	16.44
	20.0	18.5	85.9	22.43	80.3	20.88	74.6	19.14	71.9	18.56	69.0	17.82	63.3	16.39
	24.0	20.5	85.9	22.33	80.3	20.79	74.6	19.06	71.9	18.48	69.0	17.74	63.3	16.31
60%	-19.8	-20.0	66.8	42.91	63.6	41.82	59.7	38.20	57.9	36.96	55.6	35.39	51.0	32.13
	-18.8	-19.0	74.0	47.11	69.0	44.75	64.2	40.19	61.8	38.61	59.5	37.06	54.4	33.56
	-16.7	-17.0	74.0	45.94	69.1	42.94	64.2	38.43	61.8	36.93	59.5	35.45	54.5	32.15
	-13.7	-15.0	74.2	44.47	69.2	40.87	64.4	36.65	62.0	35.23	59.6	33.83	54.6	30.68
	-11.8	-13.0	74.2	42.09	69.2	38.72	64.4	34.79	62.0	33.45	59.6	32.14	54.6	29.18
	-9.8	-11.0	74.3	39.82	69.3	36.66	64.5	33.02	62.1	31.72	59.7	30.49	54.6	27.73
	-9.5	-10.0	74.3	38.72	69.3	35.67	64.5	32.13	62.1	30.91	59.7	29.68	54.7	26.97
	-8.5	-9.1	74.3	37.70	69.3	34.76	64.5	31.35	62.1	30.14	59.7	28.95	54.7	26.33
	-7.0	-7.6	74.2	35.98	69.2	33.21	64.4	29.97	62.0	28.84	59.6	27.70	54.6	25.23
	-5.0	-5.6	73.7	33.69	68.8	31.10	64.0	28.15	61.6	27.08	59.3	26.02	54.2	23.73
	-3.0	-3.7	73.7	31.81	68.8	29.39	64.0	26.74	61.6	25.66	59.3	24.65	54.2	22.46
	0.0	-0.7	73.7	29.06	68.8	26.91	64.0	24.45	61.6	23.56	59.3	22.64	54.2	20.65
	3.0	2.2	73.7	26.65	68.8	24.72	64.0	22.53	61.6	21.68	59.3	20.89	54.2	19.06
	5.0	4.1	73.7	25.20	68.8	23.38	64.0	21.34	61.6	20.58	59.3	19.79	54.2	18.11
	7.0	6.0	73.7	23.85	68.8	22.14	64.0	20.23	61.6	19.52	59.3	18.82	54.2	17.20
	9.0	7.9	73.7	22.60	68.8	21.00	64.0	19.22	61.6	18.55	59.3	17.86	54.2	16.39
	11.0	9.8	73.7	21.44	68.8	19.95	64.0	18.30	61.6	17.63	59.3	16.98	54.2	15.62
	13.0	11.8	73.7	20.28	68.8	18.90	64.0	17.38	61.6	16.76	59.3	16.15	54.2	14.84
	15.0	13.7	73.7	19.31	68.8	17.95	64.0	16.54	61.6	15.97	59.3	15.42	54.2	14.16
	18.0	16.8	73.7	19.26	68.8	17.90	64.0	16.50	61.6	15.93	59.3	15.38	54.2	14.12
	20.0	18.5	73.7	19.20	68.8	17.84	64.0	16.45	61.6	15.88	59.3	15.32	54.2	14.08
	24.0	20.5	73.7	19.12	68.8	17.76	64.0	16.38	61.6	15.81	59.3	15.26	54.2	14.02

TC—Total capacity of outdoor unit; PI—Power input of outdoor unit														
Connection ratio	Outdoor air temp.（℃）		Indoor air temp.（℃ DB）											
			16		18		20		21		22		24	
			TC	PI	TC	PI	TC	PI	TC	PI	TC	PI	TC	PI
	℃ DB	℃ WB	kW	kW	kW	kW	kW	kW	kW	kW	kW	kW	kW	kW
50%	-19.8	-20.0	56.8	36.75	53.5	34.11	49.5	30.40	47.9	29.66	45.9	28.34	43.2	26.54
	-18.8	-19.0	61.6	38.98	57.6	35.97	53.6	32.31	51.6	31.24	49.5	29.97	45.5	27.38
	-16.7	-17.0	61.7	37.23	57.7	34.38	53.7	30.94	51.7	29.95	49.6	28.77	45.5	26.27
	-13.7	-15.0	61.8	35.52	57.8	32.83	53.8	29.55	51.8	28.64	49.7	27.50	45.6	25.13
	-11.8	-13.0	61.8	33.73	57.8	31.25	53.8	28.15	51.8	27.26	49.7	26.16	45.6	23.95
	-9.8	-11.0	61.9	31.99	57.9	29.61	53.8	26.78	51.8	25.92	49.8	24.91	45.7	22.79
	-9.5	-10.0	61.9	31.13	57.9	28.81	53.9	26.10	51.9	25.29	49.8	24.28	45.7	22.21
	-8.5	-9.1	61.9	30.35	57.9	28.14	53.9	25.46	51.9	24.69	49.8	23.73	45.7	21.71
	-7.0	-7.6	61.8	29.04	57.8	27.03	53.8	24.41	51.8	23.68	49.7	22.76	45.6	20.84
	-5.0	-5.6	61.4	27.23	57.4	25.30	53.4	22.99	51.4	22.30	49.4	21.43	45.3	19.63
	-3.0	-3.7	61.4	25.79	57.4	23.97	53.4	21.81	51.4	21.15	49.4	20.33	45.3	18.67
	0.0	-0.7	61.4	23.67	57.4	22.02	53.4	20.12	51.4	19.50	49.4	18.77	45.3	17.26
	3.0	2.2	61.4	21.80	57.4	20.30	53.4	18.56	51.4	18.02	49.4	17.39	45.3	15.98
	5.0	4.1	61.4	20.69	57.4	19.26	53.4	17.64	51.4	17.14	49.4	16.51	45.3	15.20
	7.0	6.0	61.4	19.63	57.4	18.30	53.4	16.82	51.4	16.31	49.4	15.73	45.3	14.52
	9.0	7.9	61.4	18.62	57.4	17.40	53.4	15.99	51.4	15.57	49.4	14.99	45.3	13.83
	11.0	9.8	61.4	17.71	57.4	16.54	53.4	15.25	51.4	14.83	49.4	14.29	45.3	13.19
	13.0	11.8	61.4	16.84	57.4	15.73	53.4	14.51	51.4	14.13	49.4	13.60	45.3	12.60
	15.0	13.7	61.4	16.03	57.4	15.02	53.4	13.87	51.4	13.48	49.4	13.00	45.3	12.00
	18.0	16.8	61.4	15.98	57.4	14.98	53.4	13.83	51.4	13.45	49.4	12.97	45.3	11.97
	20.0	18.5	61.4	15.93	57.4	14.93	53.4	13.78	51.4	13.40	49.4	12.92	45.3	11.93
	24.0	20.5	61.4	15.86	57.4	14.86	53.4	13.73	51.4	13.35	49.4	12.86	45.3	11.88

GMV-1010WM/B-X(P)

TC—Total capacity of outdoor unit; PI—Power input of outdoor unit														
Connection ratio	Outdoor air temp.（℃）		Indoor air temp.（℃ DB）											
			16		18		20		21		22		24	
			TC	PI	TC	PI	TC	PI	TC	PI	TC	PI	TC	PI
	℃ DB	℃ WB	kW	kW	kW	kW	kW	kW	kW	kW	kW	kW	kW	kW
135%	-19.8	-20.0	71.4	27.18	71.2	29.15	71.0	30.63	70.9	31.63	70.7	32.77	70.5	34.73
	-18.8	-19.0	72.0	27.62	71.9	29.58	71.6	30.85	71.3	31.89	71.2	32.82	71.1	34.94
	-16.7	-17.0	73.3	28.35	73.1	30.13	72.8	31.44	72.5	32.13	72.5	33.23	72.2	35.17
	-13.7	-15.0	74.6	28.97	74.5	30.70	74.2	31.87	73.9	32.66	73.8	33.70	73.6	35.40
	-11.8	-13.0	75.7	29.53	75.6	31.04	75.3	32.06	75.3	33.05	75.1	33.89	74.9	35.56
	-9.8	-11.0	79.9	31.07	79.7	32.59	79.2	33.47	78.8	34.13	78.3	34.78	77.7	36.24
	-9.5	-10.0	81.8	31.71	81.3	33.04	80.7	33.82	80.2	34.47	79.9	35.28	79.6	36.69
	-8.5	-9.1	83.9	32.43	82.9	33.54	82.3	34.19	81.7	34.86	81.4	35.54	81.1	37.08
	-7.0	-7.6	85.2	32.72	84.9	33.99	84.7	34.80	84.6	35.57	84.3	36.33	84.0	37.83
	-5.0	-5.6	91.1	34.51	90.5	34.98	89.6	36.19	89.3	36.83	88.9	37.49	88.6	38.76
	-3.0	-3.7	95.0	35.50	94.0	36.47	93.7	36.99	93.4	37.75	93.1	38.34	92.8	39.66
	0.0	-0.7	102.3	37.16	100.9	37.78	100.7	38.36	100.7	39.02	100.3	39.68	100.3	40.89
	3.0	2.2	111.6	39.07	111.0	40.04	109.0	39.93	108.5	40.37	108.5	41.03	108.2	42.17
	5.0	4.1	115.8	39.59	115.4	40.56	114.8	40.77	114.3	41.34	114.0	41.85	113.6	42.89
	7.0	6.0	121.5	40.48	121.2	41.40	120.5	41.57	119.9	37.53	119.9	42.61	116.0	41.36
	9.0	7.9	127.4	41.21	126.9	42.09	126.5	42.27	126.2	42.84	123.7	42.12	116.0	38.88
	11.0	9.8	133.2	41.85	132.9	42.67	132.5	42.76	128.1	41.23	123.9	39.63	116.0	36.63
	13.0	11.8	140.3	42.61	140.0	43.44	132.9	40.24	128.1	38.64	123.9	37.21	116.0	34.37
	15.0	13.7	147.0	43.34	141.3	41.33	132.9	37.93	128.1	36.47	123.9	35.07	116.0	32.44
	18.0	16.8	147.0	43.22	141.3	41.22	132.9	37.83	128.1	36.37	123.9	34.98	116.0	32.36
	20.0	18.5	147.0	43.05	141.3	41.06	132.9	37.69	128.1	36.24	123.9	34.85	116.0	32.24
	24.0	20.5	147.0	42.85	141.3	40.87	132.9	37.52	128.1	36.07	123.9	34.69	116.0	32.10
120%	-19.8	-20.0	71.2	29.86	71.1	31.69	70.8	32.95	70.5	33.76	70.4	34.73	70.3	36.77
	-18.8	-19.0	71.8	30.24	71.7	32.06	71.4	32.75	71.1	34.05	70.9	34.96	70.9	36.96
	-16.7	-17.0	73.0	30.77	72.9	32.50	72.6	33.39	72.3	34.34	72.3	35.28	72.0	37.00
	-13.7	-15.0	74.3	31.23	74.2	32.83	73.9	33.79	73.6	34.56	73.7	35.46	73.5	37.19
	-11.8	-13.0	75.5	31.64	75.4	33.06	75.2	33.93	75.0	34.68	74.9	35.62	74.8	37.10
	-9.8	-11.0	79.8	33.15	79.5	34.54	78.9	35.06	78.8	35.94	78.3	36.51	77.6	37.87
	-9.5	-10.0	81.5	33.68	81.0	34.91	80.4	35.49	79.9	36.10	79.5	36.39	79.5	38.27
	-8.5	-9.1	83.3	34.25	82.6	35.37	82.1	35.87	81.5	36.51	81.3	37.19	81.0	38.61
	-7.0	-7.6	85.0	34.63	84.8	35.76	84.3	36.34	84.3	37.07	84.2	37.89	83.9	39.12
	-5.0	-5.6	91.0	36.31	90.3	37.39	89.6	37.81	89.3	38.40	88.9	38.94	88.4	40.16
	-3.0	-3.7	94.0	36.90	93.6	37.87	93.0	38.25	92.8	38.85	92.7	39.64	92.5	40.81
	0.0	-0.7	102.2	38.75	100.8	39.27	100.3	40.09	100.3	40.27	100.1	40.96	100.0	42.08
	3.0	2.2	111.1	40.48	110.5	41.36	108.8	41.08	108.5	41.70	108.2	42.17	107.2	42.56
	5.0	4.1	115.5	40.95	115.1	41.83	114.6	42.00	114.3	42.58	114.0	43.06	106.9	39.88
	7.0	6.0	121.2	41.74	120.3	42.30	120.2	42.65	119.3	42.56	113.8	40.34	106.3	37.33
	9.0	7.9	127.1	42.47	126.3	43.15	122.7	41.38	119.8	40.16	113.8	37.95	106.3	35.14
	11.0	9.8	132.9	43.01	129.6	42.21	124.3	39.43	120.1	37.91	113.8	35.74	106.3	33.13
	13.0	11.8	137.6	42.55	129.6	39.59	124.3	37.00	120.1	35.61	113.8	33.61	106.3	31.16
	15.0	13.7	137.6	40.06	129.6	37.29	124.3	34.93	120.1	33.59	113.8	31.71	106.3	29.42
	18.0	16.8	137.6	39.95	129.6	37.19	124.3	34.84	120.1	33.50	113.8	31.62	106.3	29.34
	20.0	18.5	137.6	39.80	129.6	37.05	124.3	34.72	120.1	33.38	113.8	31.51	106.3	29.24
	24.0	20.5	137.6	39.61	129.6	36.88	124.3	34.56	120.1	33.23	113.8	31.37	106.3	29.11

TC—Total capacity of outdoor unit; PI—Power input of outdoor unit														
Connection ratio	Outdoor air temp.（℃）		Indoor air temp.（℃ DB）											
			16		18		20		21		22		24	
			TC	PI	TC	PI	TC	PI	TC	PI	TC	PI	TC	PI
	℃ DB	℃ WB	kW	kW	kW	kW	kW	kW	kW	kW	kW	kW	kW	kW
110%	-19.8	-20.0	70.9	32.57	70.9	34.25	70.6	35.27	70.6	36.15	70.4	37.02	70.3	38.92
	-18.8	-19.0	71.7	32.86	71.5	34.38	71.3	35.33	71.0	36.10	70.7	37.06	70.6	38.75
	-16.7	-17.0	72.9	33.24	72.7	34.83	72.5	35.54	72.2	36.41	72.1	37.29	71.9	38.95
	-13.7	-15.0	74.2	33.55	74.0	35.06	73.8	35.80	73.5	36.49	73.4	37.32	73.4	38.99
	-11.8	-13.0	75.3	33.85	75.2	35.08	74.9	35.74	74.7	36.42	74.7	37.35	74.5	38.75
	-9.8	-11.0	79.5	35.19	79.3	36.48	79.1	37.02	79.1	37.94	78.3	38.28	78.1	39.59
	-9.5	-10.0	81.1	35.60	82.8	37.74	82.7	38.43	82.7	39.17	81.8	39.51	79.7	39.98
	-8.5	-9.1	83.2	36.24	83.6	37.81	83.4	38.24	83.3	38.96	82.3	39.38	81.3	40.18
	-7.0	-7.6	84.7	36.49	84.6	37.53	84.4	38.05	84.3	38.76	83.3	38.52	82.8	40.16
	-5.0	-5.6	90.8	38.16	90.6	39.31	90.3	39.75	90.3	40.43	89.0	38.73	88.9	41.88
	-3.0	-3.7	93.8	38.64	97.2	41.06	97.1	41.56	97.0	42.21	95.7	39.17	94.1	42.94
	0.0	-0.7	101.9	40.30	100.6	40.75	100.0	40.95	103.7	43.07	102.0	41.32	99.3	42.44
	3.0	2.2	111.0	42.01	112.5	43.59	112.2	43.72	111.0	43.95	107.3	42.29	99.3	38.63
	5.0	4.1	115.1	42.26	123.1	46.14	115.4	43.08	113.7	42.32	108.3	40.14	99.3	36.36
	7.0	6.0	120.9	43.05	123.1	44.45	118.8	41.68	114.4	40.05	108.3	37.75	99.3	34.22
	9.0	7.9	126.6	43.59	123.1	41.79	119.1	39.34	114.5	37.75	108.3	35.54	99.3	32.27
	11.0	9.8	126.6	41.00	123.1	39.31	119.1	37.04	114.5	35.59	108.3	33.52	99.3	30.45
	13.0	11.8	126.6	38.45	123.1	36.88	119.1	34.84	114.5	33.49	108.3	31.54	99.3	28.68
	15.0	13.7	126.6	36.23	123.1	34.79	119.1	32.92	114.5	31.62	108.3	29.85	99.3	27.15
	18.0	16.8	126.6	36.14	123.1	34.70	119.1	32.84	114.5	31.53	108.3	29.77	99.3	27.08
	20.0	18.5	126.6	36.00	123.1	34.57	119.1	32.72	114.5	31.42	108.3	29.66	99.3	26.98
	24.0	20.5	126.6	35.84	123.1	34.41	119.1	32.58	114.5	31.28	108.3	29.53	99.3	26.86
100%	-19.8	-20.0	70.6	35.10	70.4	36.64	70.3	37.30	70.0	38.22	69.8	38.99	69.5	40.68
	-18.8	-19.0	71.2	35.34	71.1	36.70	70.9	37.48	70.6	38.20	70.4	39.17	70.1	40.59
	-16.7	-17.0	72.4	35.56	72.4	37.07	72.1	37.54	71.8	38.20	71.5	39.06	71.2	40.40
	-13.7	-15.0	73.7	35.72	73.7	37.14	73.4	37.54	73.1	38.36	72.8	38.95	72.4	40.34
	-11.8	-13.0	74.9	35.92	74.8	37.00	74.5	37.50	74.2	38.09	73.9	37.31	73.8	40.12
	-9.8	-11.0	79.1	37.16	78.8	38.36	78.6	38.62	78.7	39.41	78.0	39.96	77.5	40.96
	-9.5	-10.0	82.7	38.44	82.4	39.61	82.3	39.95	82.3	40.80	81.6	41.18	78.9	41.22
	-8.5	-9.1	83.2	38.32	83.0	39.38	82.8	39.76	82.8	40.45	82.1	40.97	80.8	41.53
	-7.0	-7.6	84.0	38.10	84.0	39.17	83.9	39.54	83.7	40.16	83.7	40.81	83.6	42.10
	-5.0	-5.6	89.2	39.38	88.9	40.37	88.8	40.61	88.6	41.29	88.0	41.64	88.0	42.78
	-3.0	-3.7	95.9	41.31	95.6	42.13	95.3	42.43	94.9	42.85	93.2	42.69	91.2	41.92
	0.0	-0.7	100.0	41.25	100.0	42.05	100.0	42.37	99.2	42.19	95.3	40.30	91.2	38.14
	3.0	2.2	110.4	43.33	109.9	44.03	106.4	41.34	102.5	39.64	98.4	37.92	91.2	34.72
	5.0	4.1	117.5	44.70	114.0	42.91	107.5	39.32	103.5	37.74	98.4	35.72	91.2	32.76
	7.0	6.0	117.5	42.18	114.0	40.33	112.0	34.20	103.5	35.56	98.4	33.66	91.2	30.88
	9.0	7.9	117.5	39.62	114.0	37.95	112.0	36.08	103.5	33.52	98.4	31.74	91.2	29.15
	11.0	9.8	117.5	37.31	114.0	35.77	112.0	34.08	103.5	31.61	98.4	29.95	91.2	27.55
	13.0	11.8	117.5	35.04	114.0	33.63	112.0	32.12	103.5	29.81	98.4	28.26	91.2	26.00
	15.0	13.7	117.5	33.05	114.0	31.74	112.0	30.36	103.5	28.19	98.4	26.71	91.2	24.64
	18.0	16.8	117.5	32.97	114.0	31.65	112.0	30.28	103.5	28.11	98.4	26.64	91.2	24.58
	20.0	18.5	117.5	32.85	114.0	31.54	112.0	30.17	103.5	28.02	98.4	26.55	91.2	24.49
	24.0	20.5	117.5	32.70	114.0	31.40	112.0	30.04	103.5	27.89	98.4	26.43	91.2	24.38

GMV X DC Inverter VRF Units

TC—Total capacity of outdoor unit; PI—Power input of outdoor unit														
Connection ratio	Outdoor air temp.（℃）		Indoor air temp.（℃ DB）											
			16		18		20		21		22		24	
			TC	PI	TC	PI	TC	PI	TC	PI	TC	PI	TC	PI
	℃ DB	℃ WB	kW	kW	kW	kW	kW	kW	kW	kW	kW	kW	kW	kW
90%	-19.8	-20.0	70.4	37.81	70.3	39.21	70.1	39.61	69.8	40.46	69.7	41.25	69.5	42.65
	-18.8	-19.0	92.2	49.28	92.0	50.89	91.9	51.67	91.9	52.74	91.9	53.77	86.0	52.40
	-16.7	-17.0	93.7	49.42	93.5	51.11	93.5	51.56	93.5	52.61	93.5	53.82	86.1	51.27
	-13.7	-15.0	95.4	49.41	95.3	51.08	95.1	51.38	95.2	52.10	94.2	53.02	86.3	50.11
	-11.8	-13.0	96.9	49.35	96.8	50.69	96.6	51.15	96.7	52.09	94.2	51.64	86.3	48.94
	-9.8	-11.0	98.5	48.99	98.4	50.24	98.2	50.62	98.0	51.38	94.4	50.30	86.4	47.58
	-9.5	-10.0	99.3	48.76	99.2	50.18	99.0	50.30	98.2	50.89	94.4	49.74	86.5	46.79
	-8.5	-9.1	100.0	48.66	99.8	49.73	99.8	50.12	98.2	50.07	94.4	48.93	86.5	45.98
	-7.0	-7.6	101.0	48.21	100.8	49.20	100.7	49.59	98.0	48.94	94.2	47.77	86.3	43.83
	-5.0	-5.6	107.3	49.66	107.1	50.80	101.2	48.11	97.4	46.99	93.7	45.29	85.8	40.98
	-3.0	-3.7	108.6	48.91	108.6	44.45	101.2	46.33	97.4	44.55	93.7	42.67	85.8	38.63
	0.0	-0.7	110.8	47.37	108.7	41.53	101.2	42.10	97.4	40.50	93.7	38.81	85.8	35.16
	3.0	2.2	114.0	45.15	108.7	42.46	101.2	38.41	97.4	36.99	93.7	35.44	85.8	32.17
	5.0	4.1	116.4	43.32	108.7	39.94	101.2	36.23	97.4	34.85	93.7	33.46	85.8	30.35
	7.0	6.0	116.4	40.73	108.7	37.63	101.2	34.15	97.4	32.92	93.7	31.57	85.8	28.68
	9.0	7.9	116.4	38.39	108.7	35.42	101.2	32.22	97.4	31.08	93.7	29.83	85.8	27.11
	11.0	9.8	116.4	36.16	108.7	33.42	101.2	30.48	97.4	29.38	93.7	28.19	85.8	25.69
	13.0	11.8	116.4	34.03	108.7	31.52	101.2	28.74	97.4	27.74	93.7	26.64	85.8	24.26
	15.0	13.7	116.4	32.16	108.7	29.77	101.2	27.25	97.4	26.19	93.7	25.25	85.8	23.03
	18.0	16.8	116.4	32.08	108.7	29.69	101.2	27.18	97.4	26.13	93.7	25.18	85.8	22.97
	20.0	18.5	116.4	31.96	108.7	29.59	101.2	27.08	97.4	26.04	93.7	25.10	85.8	22.89
	24.0	20.5	116.4	31.82	108.7	29.46	101.2	26.97	97.4	25.92	93.7	24.99	85.8	22.79
80%	-19.8	-20.0	70.1	40.47	70.1	41.79	69.8	41.86	69.7	42.56	69.5	43.48	69.2	44.65
	-18.8	-19.0	91.8	52.64	91.8	54.14	90.2	53.72	86.9	52.68	83.5	51.56	76.6	49.03
	-16.7	-17.0	93.4	52.58	93.3	54.17	90.3	52.65	86.9	51.55	83.6	50.44	76.7	47.83
	-13.7	-15.0	95.2	52.45	95.0	53.86	90.5	51.47	87.1	50.33	83.8	49.45	76.8	46.65
	-11.8	-13.0	96.7	52.19	96.5	53.33	90.5	50.30	87.1	49.17	83.8	48.07	76.8	44.45
	-9.8	-11.0	98.3	51.62	97.5	52.35	90.6	48.93	87.2	47.76	83.9	46.43	76.9	42.06
	-9.5	-10.0	99.1	51.28	97.5	51.76	90.7	48.13	87.3	47.03	84.0	45.12	77.0	40.86
	-8.5	-9.1	99.7	51.01	97.5	50.96	90.7	47.53	87.3	45.89	84.0	43.93	77.0	39.77
	-7.0	-7.6	100.6	50.45	97.3	49.74	90.5	45.60	87.1	43.73	83.8	41.91	76.8	38.12
	-5.0	-5.6	103.6	44.71	96.8	47.43	90.0	42.64	86.6	40.91	83.3	39.20	76.4	35.55
	-3.0	-3.7	103.6	43.24	96.8	44.65	90.0	40.18	86.6	38.75	83.3	36.98	76.4	33.60
	0.0	-0.7	103.6	43.96	96.8	40.53	90.0	36.63	86.6	35.19	83.3	33.72	76.4	30.66
	3.0	2.2	103.6	40.06	96.8	36.97	90.0	33.52	86.6	32.18	83.3	30.90	76.4	28.11
	5.0	4.1	103.6	37.72	96.8	34.86	90.0	31.64	86.6	30.39	83.3	29.21	76.4	26.59
	7.0	6.0	103.6	35.53	96.8	32.95	90.0	29.90	86.6	28.76	83.3	27.62	76.4	25.17
	9.0	7.9	103.6	33.55	96.8	31.05	90.0	28.41	86.6	27.17	83.3	26.13	76.4	23.84
	11.0	9.8	103.6	31.68	96.8	29.35	90.0	26.77	86.6	25.72	83.3	24.74	76.4	22.62
	13.0	11.8	103.6	29.85	96.8	27.70	90.0	25.32	86.6	24.33	83.3	23.40	76.4	21.39
	15.0	13.7	103.6	28.24	96.8	26.25	90.0	24.02	86.6	23.08	83.3	22.20	76.4	20.35
	18.0	16.8	103.6	28.17	96.8	26.19	90.0	23.96	86.6	23.03	83.3	22.15	76.4	20.30
	20.0	18.5	103.6	28.07	96.8	26.10	90.0	23.88	86.6	22.95	83.3	22.07	76.4	20.23
	24.0	20.5	103.6	27.94	96.8	25.98	90.0	23.78	86.6	22.85	83.3	21.98	76.4	20.15

TC—Total capacity of outdoor unit; PI—Power input of outdoor unit														
Connection ratio	Outdoor air temp.（℃）		Indoor air temp.（℃ DB）											
			16		18		20		21		22		24	
			TC	PI	TC	PI	TC	PI	TC	PI	TC	PI	TC	PI
	℃ DB	℃ WB	kW	kW	kW	kW	kW	kW	kW	kW	kW	kW	kW	kW
70%	-19.8	-20.0	69.9	43.13	69.7	44.23	69.4	44.00	69.0	44.43	68.1	44.62	66.0	44.15
	-18.8	-19.0	91.0	55.80	85.1	53.33	79.1	49.75	76.2	48.66	73.1	47.52	67.1	43.90
	-16.7	-17.0	91.1	54.59	85.2	52.16	79.2	48.60	76.2	47.53	73.2	46.25	67.1	41.94
	-13.7	-15.0	91.3	53.34	85.3	51.12	79.3	47.42	76.4	5.20	73.3	44.07	67.3	39.96
	-11.8	-13.0	91.3	52.09	85.3	49.63	79.3	45.26	76.4	43.66	73.3	41.80	67.3	37.90
	-9.8	-11.0	91.4	50.58	85.4	47.80	79.5	42.87	76.5	41.35	73.4	39.58	67.3	35.94
	-9.5	-10.0	91.5	49.79	85.5	46.43	79.5	41.67	76.5	40.18	73.5	38.51	67.4	34.97
	-8.5	-9.1	91.5	49.05	85.5	45.18	79.5	40.58	76.5	39.14	73.5	37.51	67.4	34.08
	-7.0	-7.6	91.3	46.76	85.3	43.07	79.3	38.78	76.4	37.43	73.3	35.85	67.3	32.58
	-5.0	-5.6	90.7	43.67	84.8	40.29	78.9	36.34	75.9	35.03	72.9	33.56	66.9	30.58
	-3.0	-3.7	90.7	41.12	84.8	37.98	78.9	34.32	75.9	33.10	72.9	31.73	66.9	28.91
	0.0	-0.7	90.7	37.43	84.8	34.79	78.9	31.37	75.9	30.28	72.9	29.05	66.9	26.50
	3.0	2.2	90.7	34.21	84.8	31.71	78.9	28.79	75.9	27.79	72.9	26.67	66.9	24.34
	5.0	4.1	90.7	32.28	84.8	29.90	78.9	27.26	75.9	26.30	72.9	25.28	66.9	23.06
	7.0	6.0	90.7	30.51	84.8	28.30	78.9	25.77	75.9	24.90	72.9	23.94	66.9	21.88
	9.0	7.9	90.7	28.85	84.8	26.75	78.9	24.43	75.9	23.60	72.9	22.69	66.9	20.75
	11.0	9.8	90.7	27.28	84.8	25.31	78.9	23.18	75.9	22.41	72.9	21.54	66.9	19.71
	13.0	11.8	90.7	25.78	84.8	23.97	78.9	21.94	75.9	21.26	72.9	20.40	66.9	18.73
	15.0	13.7	90.7	24.42	84.8	22.74	78.9	20.84	75.9	20.20	72.9	19.40	66.9	17.84
	18.0	16.8	90.7	24.36	84.8	22.68	78.9	20.79	75.9	20.15	72.9	19.35	66.9	17.79
	20.0	18.5	90.7	24.28	84.8	22.60	78.9	20.72	75.9	20.09	72.9	19.28	66.9	17.73
	24.0	20.5	90.7	24.17	84.8	22.50	78.9	20.63	75.9	20.00	72.9	19.20	66.9	17.66
60%	-19.8	-20.0	70.6	46.44	67.2	45.26	63.1	41.34	61.2	40.00	58.7	38.31	53.9	34.78
	-18.8	-19.0	78.1	50.99	72.9	48.43	67.8	43.50	65.3	41.79	62.8	40.10	57.5	36.33
	-16.7	-17.0	78.2	49.72	73.0	46.48	67.9	41.59	65.3	39.97	62.9	38.37	57.5	34.80
	-13.7	-15.0	78.4	48.13	73.1	44.24	68.0	39.67	65.5	38.13	63.0	36.62	57.7	33.20
	-11.8	-13.0	78.4	45.55	73.1	41.90	68.0	37.66	65.5	36.21	63.0	34.79	57.7	31.58
	-9.8	-11.0	78.5	43.10	73.2	39.68	68.1	35.74	65.6	34.33	63.1	33.00	57.7	30.01
	-9.5	-10.0	78.5	41.91	73.3	38.61	68.1	34.77	65.6	33.46	63.1	32.12	57.8	29.19
	-8.5	-9.1	78.5	40.81	73.3	37.62	68.1	33.93	65.6	32.62	63.1	31.33	57.8	28.50
	-7.0	-7.6	78.4	38.94	73.1	35.94	68.0	32.43	65.5	31.21	63.0	29.97	57.7	27.31
	-5.0	-5.6	77.9	36.46	72.7	33.66	67.6	30.47	65.1	29.30	62.6	28.17	57.3	25.68
	-3.0	-3.7	77.9	34.43	72.7	31.81	67.6	28.94	65.1	27.77	62.6	26.68	57.3	24.31
	0.0	-0.7	77.9	31.45	72.7	29.12	67.6	26.47	65.1	25.50	62.6	24.50	57.3	22.35
	3.0	2.2	77.9	28.84	72.7	26.75	67.6	24.38	65.1	23.46	62.6	22.61	57.3	20.63
	5.0	4.1	77.9	27.27	72.7	25.31	67.6	23.09	65.1	22.27	62.6	21.42	57.3	19.60
	7.0	6.0	77.9	25.81	72.7	23.96	67.6	21.90	65.1	21.13	62.6	20.37	57.3	18.62
	9.0	7.9	77.9	24.45	72.7	22.73	67.6	20.80	65.1	20.08	62.6	19.33	57.3	17.74
	11.0	9.8	77.9	23.20	72.7	21.59	67.6	19.80	65.1	19.08	62.6	18.38	57.3	16.90
	13.0	11.8	77.9	21.95	72.7	20.45	67.6	18.80	65.1	18.13	62.6	17.48	57.3	16.06
	15.0	13.7	77.9	20.90	72.7	19.42	67.6	17.90	65.1	17.29	62.6	16.68	57.3	15.33
	18.0	16.8	77.9	20.85	72.7	19.37	67.6	17.86	65.1	17.24	62.6	16.64	57.3	15.29
	20.0	18.5	77.9	20.78	72.7	19.31	67.6	17.80	65.1	17.18	62.6	16.59	57.3	15.23
	24.0	20.5	77.9	20.69	72.7	19.22	67.6	17.72	65.1	17.11	62.6	16.51	57.3	15.17

GMV X DC Inverter VRF Units

TC—Total capacity of outdoor unit; PI—Power input of outdoor unit														
Connection ratio	Outdoor air temp.（℃）		Indoor air temp.（℃ DB）											
			16		18		20		21		22		24	
			TC	PI	TC	PI	TC	PI	TC	PI	TC	PI	TC	PI
	℃ DB	℃ WB	kW	kW	kW	kW	kW	kW	kW	kW	kW	kW	kW	kW
50%	-19.8	-20.0	60.0	39.77	56.5	36.92	52.3	32.90	50.7	32.10	48.5	30.67	45.7	28.73
	-18.8	-19.0	65.1	42.18	60.9	38.93	56.6	34.97	54.5	33.81	52.4	32.44	48.1	29.63
	-16.7	-17.0	65.1	40.29	60.9	37.21	56.7	33.49	54.6	32.41	52.4	31.14	48.1	28.43
	-13.7	-15.0	65.3	38.44	61.0	35.53	56.8	31.99	54.7	30.99	52.5	29.76	48.2	27.20
	-11.8	-13.0	65.3	36.50	61.0	33.82	56.8	30.46	54.7	29.51	52.5	28.32	48.2	25.92
	-9.8	-11.0	65.4	34.62	61.1	32.05	56.9	28.98	54.8	28.06	52.6	26.96	48.3	24.67
	-9.5	-10.0	65.4	33.69	61.2	31.18	56.9	28.25	54.8	27.37	52.6	26.28	48.3	24.04
	-8.5	-9.1	65.4	32.85	61.2	30.46	56.9	27.56	54.8	26.72	52.6	25.68	48.3	23.49
	-7.0	-7.6	65.3	31.43	61.0	29.26	56.8	26.42	54.7	25.63	52.5	24.63	48.2	22.56
	-5.0	-5.6	64.9	29.47	60.7	27.38	56.5	24.88	54.4	24.13	52.2	23.20	47.9	21.24
	-3.0	-3.7	64.9	27.91	60.7	25.94	56.5	23.60	54.4	22.89	52.2	22.00	47.9	20.21
	0.0	-0.7	64.9	25.62	60.7	23.83	56.5	21.77	54.4	21.10	52.2	20.31	47.9	18.68
	3.0	2.2	64.9	23.59	60.7	21.97	56.5	20.09	54.4	19.50	52.2	18.82	47.9	17.29
	5.0	4.1	64.9	22.39	60.7	20.84	56.5	19.09	54.4	18.55	52.2	17.87	47.9	16.45
	7.0	6.0	64.9	21.25	60.7	19.81	56.5	18.20	54.4	17.65	52.2	17.02	47.9	15.71
	9.0	7.9	64.9	20.15	60.7	18.83	56.5	17.30	54.4	16.85	52.2	16.22	47.9	14.97
	11.0	9.8	64.9	19.17	60.7	17.90	56.5	16.51	54.4	16.05	52.2	15.47	47.9	14.28
	13.0	11.8	64.9	18.23	60.7	17.03	56.5	15.71	54.4	15.30	52.2	14.72	47.9	13.63
	15.0	13.7	64.9	17.34	60.7	16.25	56.5	15.01	54.4	14.59	52.2	14.07	47.9	12.99
	18.0	16.8	64.9	17.30	60.7	16.21	56.5	14.97	54.4	14.56	52.2	14.03	47.9	12.96
	20.0	18.5	64.9	17.24	60.7	16.16	56.5	14.92	54.4	14.51	52.2	13.98	47.9	12.91
	24.0	20.5	64.9	17.17	60.7	16.09	56.5	14.86	54.4	14.44	52.2	13.92	47.9	12.85

4.3 Capacity correction according to piping length and height difference

8HP

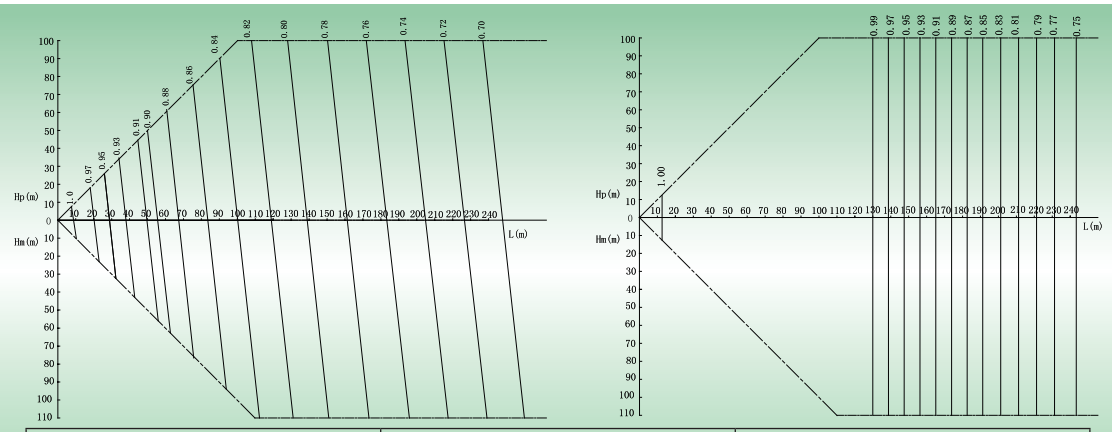

Cooling capacity	Gas pipe	Liquid pipe
8HP	Φ19.05mm	Φ9.52mm

10HP

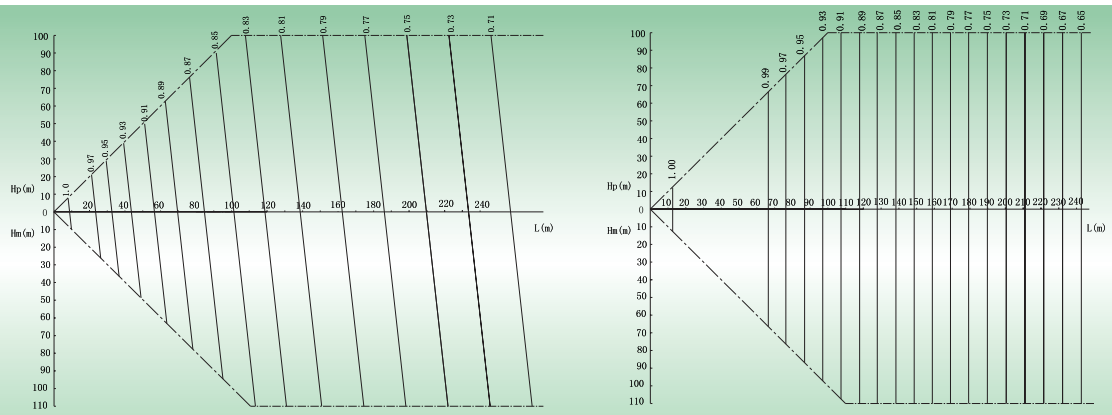

Cooling capacity	Gas pipe	Liquid pipe
10HP	Φ22.2mm	Φ9.52mm

12HP、14HP、24HP、36HP

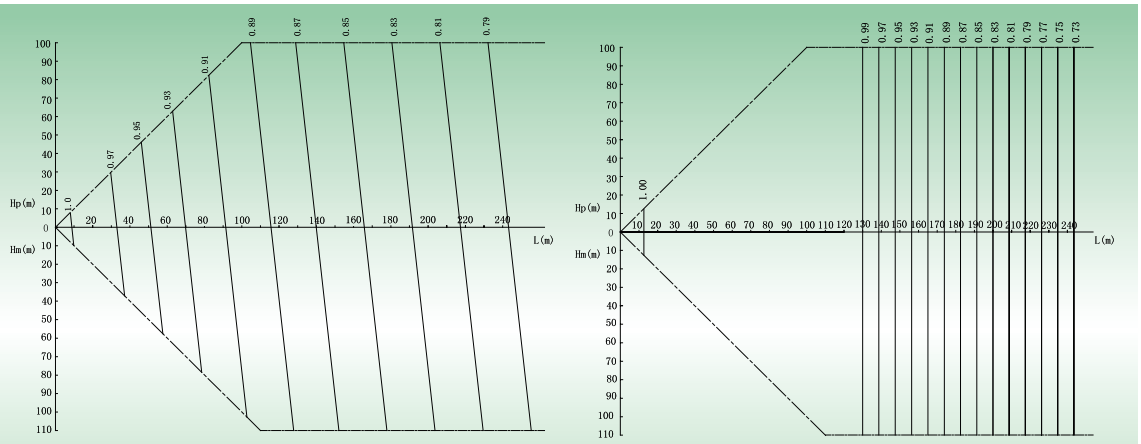

Cooling capacity	Gas pipe	Liquid pipe
12HP	Φ25.4mm	Φ12.7mm
14HP	Φ25.4mm	Φ12.7mm
24HP	Φ28.6mm	Φ15.9mm
36HP	Φ38.1mm	Φ19.05mm

16HP

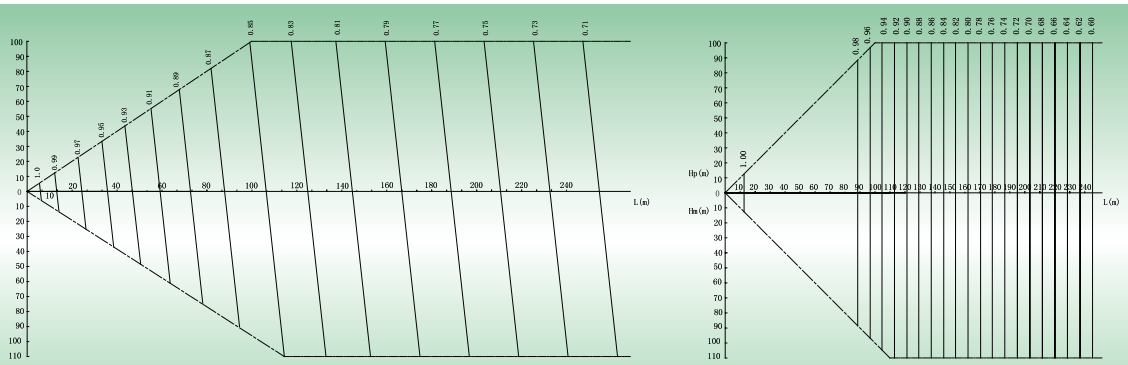

Cooling capacity	Gas pipe	Liquid pipe
16HP	Φ28.6mm	Φ12.7mm

18HP、26-30HP、38-44HP

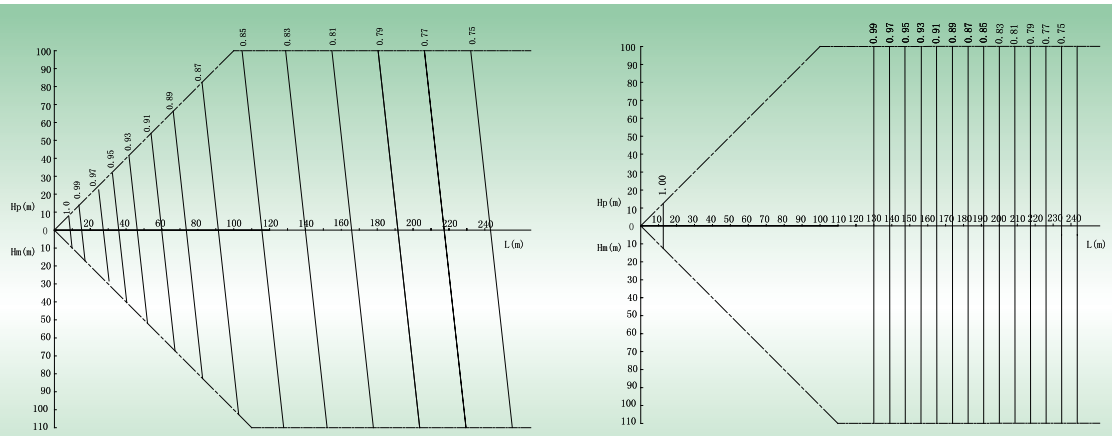

Cooling capacity	Gas pipe	Liquid pipe
18HP	Φ28.6mm	Φ15.9mm
26-30HP	Φ31.8mm	Φ19.05mm
38-44HP	Φ38.1mm	Φ19.05mm

20HP、32-34HP

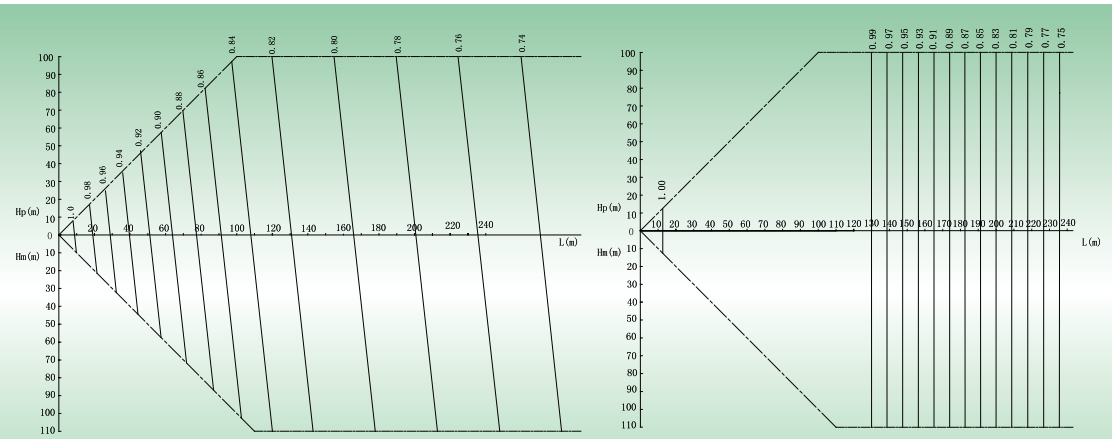

Cooling capacity	Gas pipe	Liquid pipe
20HP	Φ28.6mm	Φ15.9mm
32-34HP	Φ31.8mm	Φ19.05mm

22HP

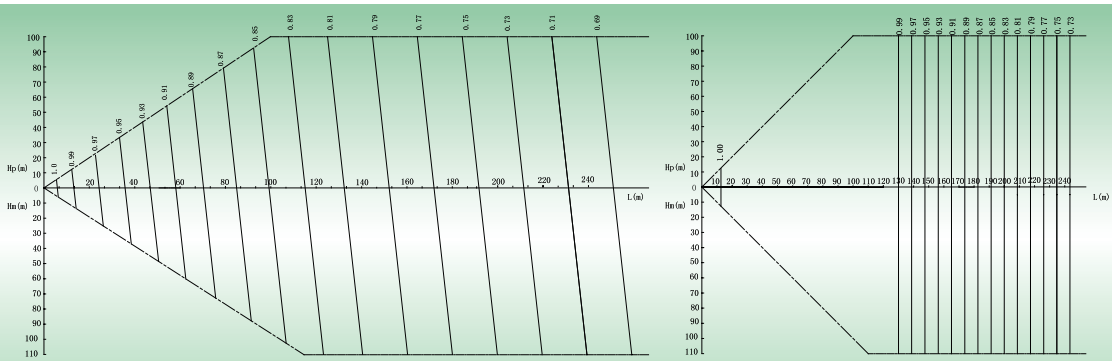

Cooling capacity	Gas pipe	Liquid pipe
22HP	Φ28.6mm	Φ15.9mm

46HP

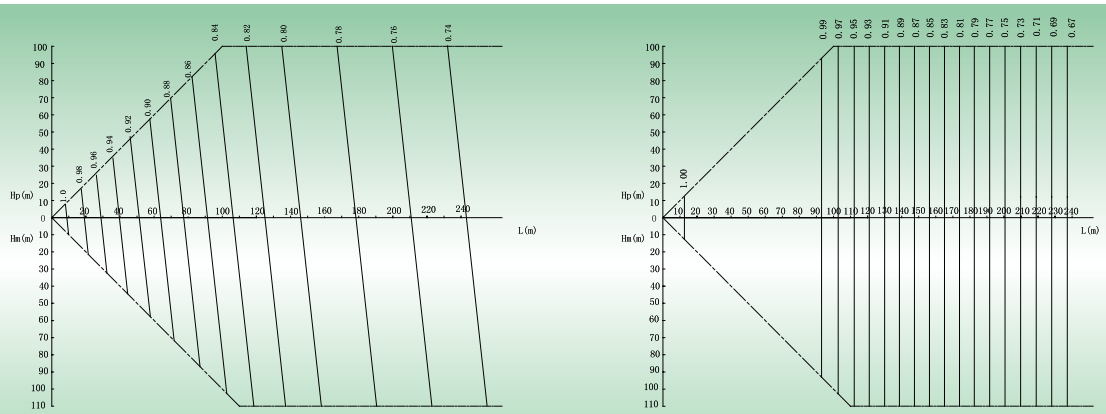

Cooling capacity	Gas pipe	Liquid pipe
46HP	Φ38.1mm	Φ19.05mm

48HP

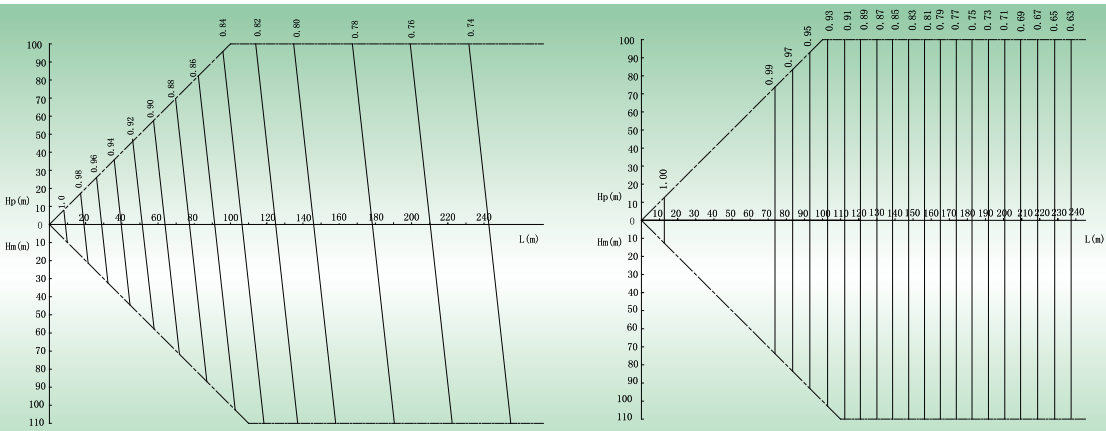

Cooling capacity	Gas pipe	Liquid pipe
48HP	Φ38.1mm	Φ19.05mm

50HP

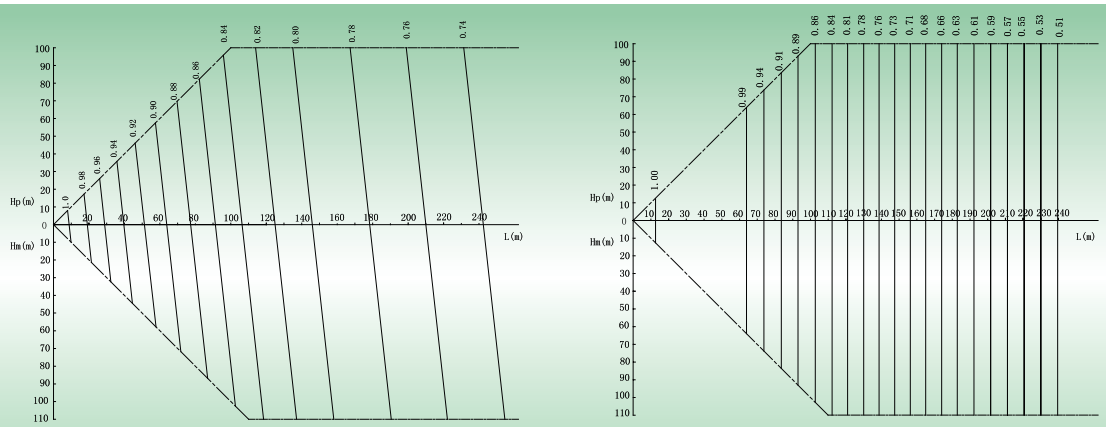

Cooling capacity	Gas pipe	Liquid pipe
50HP	Φ41.3mm	Φ19.05mm

52HP

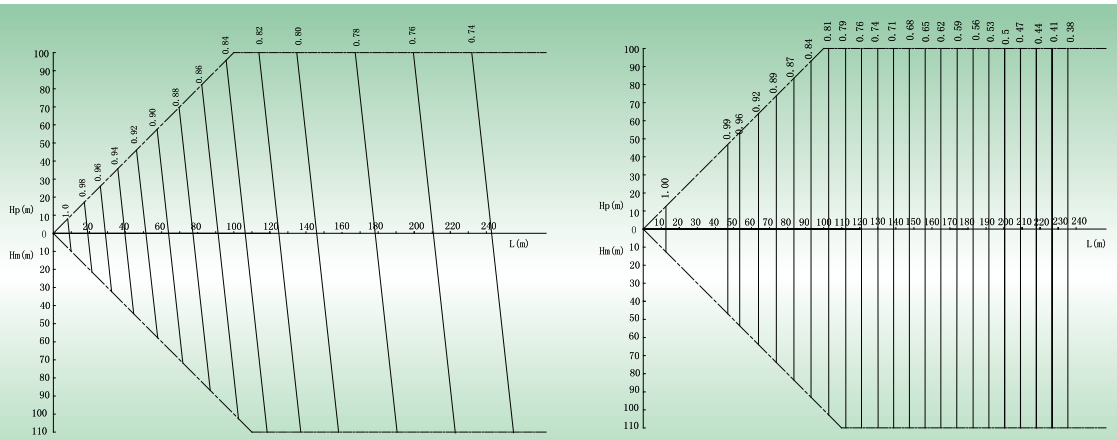

Cooling capacity	Gas pipe	Liquid pipe
52HP	Φ41.3mm	Φ19.05mm

54HP

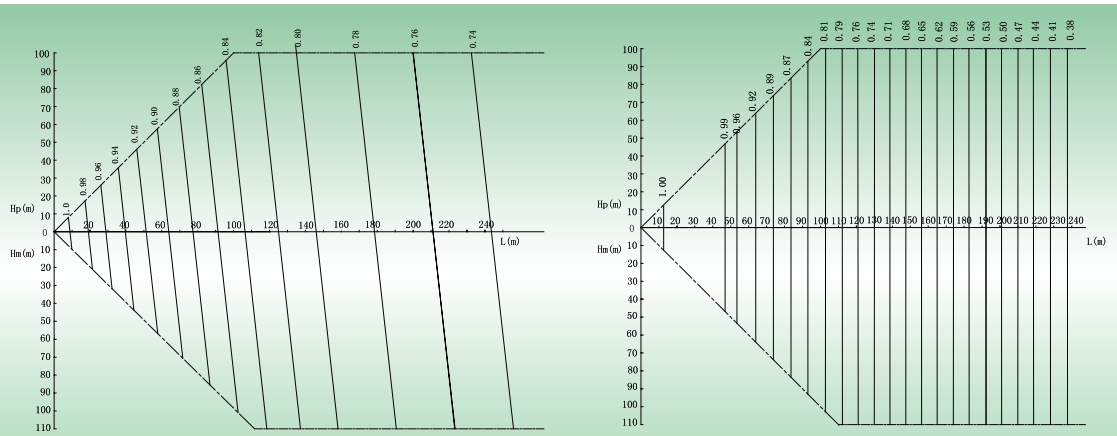

Cooling capacity	Gas pipe	Liquid pipe
54HP	Φ41.3mm	Φ19.05mm

56HP

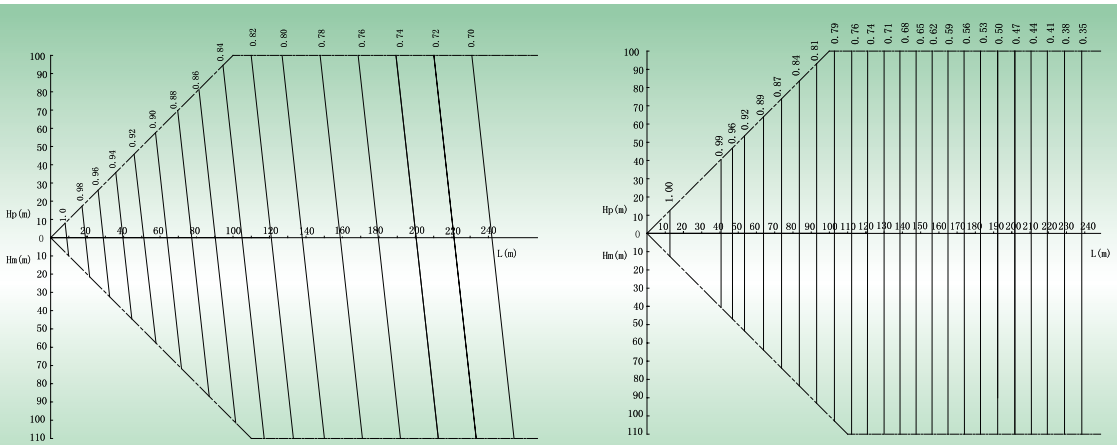

Cooling capacity	Gas pipe	Liquid pipe
56HP	Φ41.3mm	Φ19.05mm

58HP

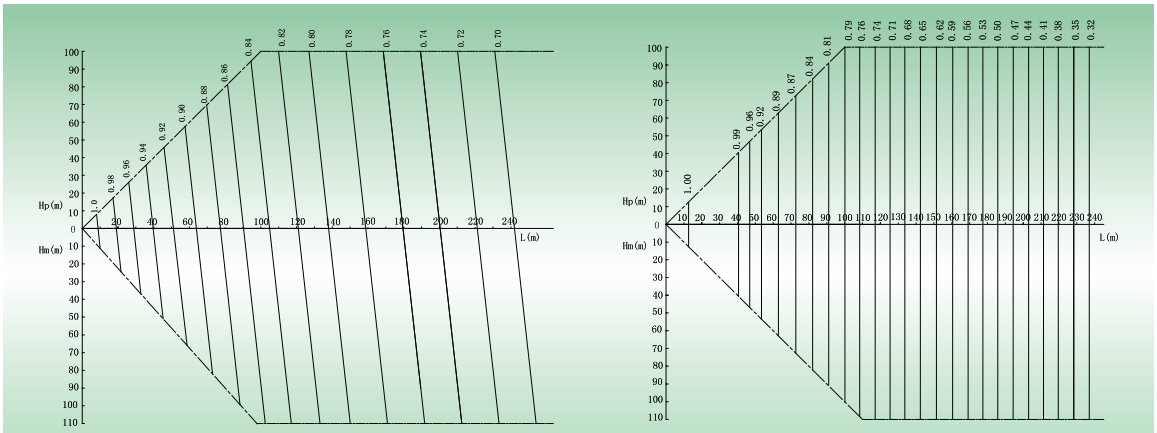

Cooling capacity	Gas pipe	Liquid pipe
58HP	Φ41.3mm	Φ19.05mm

60-66HP、68-88HP

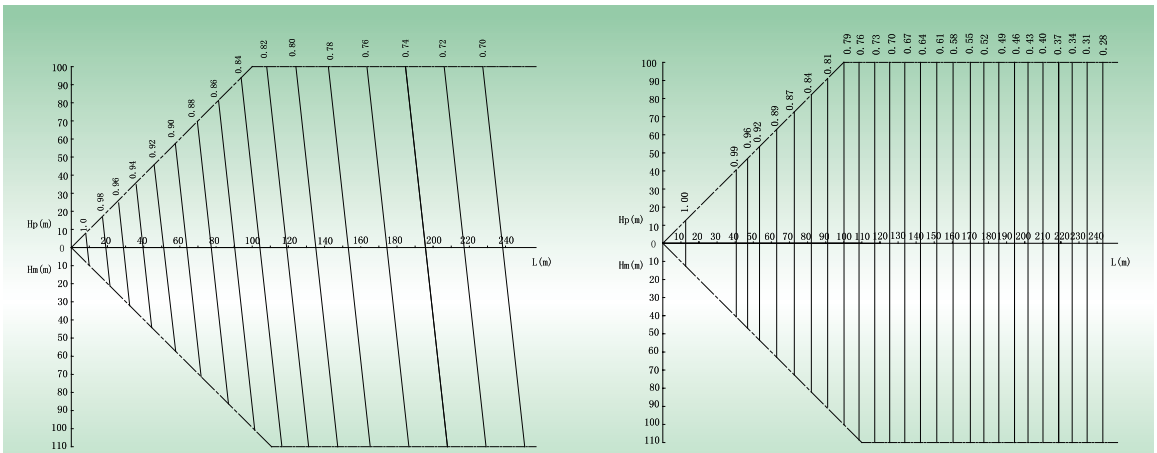

Cooling capacity	Gas pipe	Liquid pipe
60-66HP	Φ41.3mm	Φ19.05mm
68-88HP	Φ44.5mm	Φ22.2mm

90-128HP

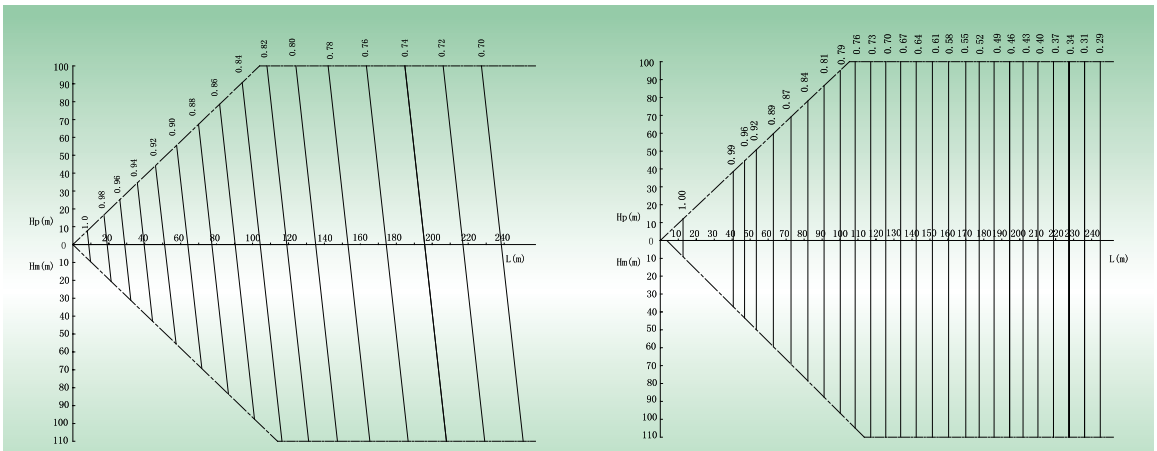

Cooling capacity	Gas pipe	Liquid pipe
90-96HP	Φ44.5mm	Φ22.2mm
98~128HP	Φ51.4mm	Φ25.4mm

Note:
Hp: Level difference when outdoor unit at upper
Hm: Level difference when outdoor unit at lower
L: The length between ODU and the farthest IDU

(1) Correction specification of long connection pipe:
The above long connection pipe correction is the maximal capacity under standard IDU capacity allocation.

(2) Part load configuration are as follow:
Maximal system capacity: IDU capacity and the maximal capacity of ODU(two kinds of algorithms below), take the lesser one.

1) Connection ratio of IDU is below 100%
The maximal capacity of ODU= The capacity in the ODU capacity correction table when the connection ratio is 100%×Long connection pipe correction coefficient of the farthest IDU.

2) Connection ratio of IDU is over 100%
The maximal capacity of ODU= The capacity corresponds to the connection ratio in the ODU capacity correction table×Long connection pipe correction coefficient of the farthest IDU.

4.4 Capacity correction factor according to defrosting

When outdoor environment meet certain condition (temperature and humidity), frosting and defrosting might occur, under this situation, heating capacity of the unit will be attenuated. Therefore, please considering the frosting and defrosting correction factor when calculating the heating load model.
Defrosting correction factor is as follow:

Outdoor heat exchanger air inlet dry bulb temperature (˚C /RH85%)	-11	-9	-7	-5	-3	0	3	5	7
Defrosting capacity correction factor	1	0.98	0.96	0.94	0.88	0.8	0.84	0.9	1

5 UNIT NOISE CURVES

Test method for noise:
Test environment: Semi-anechoic room, the noise will be a little bit higher in actual operation due to environmental change.
Noise curve test point is as follow:

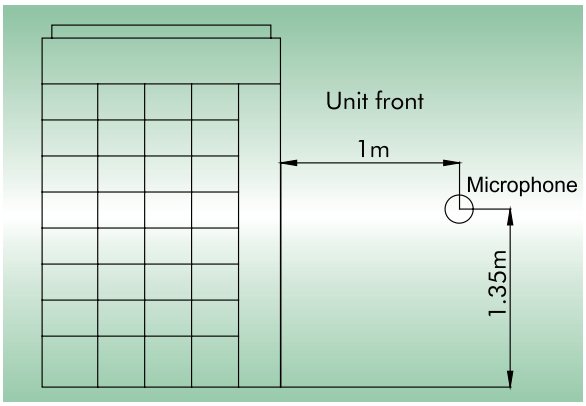

GMV-224WM/B-X(P)

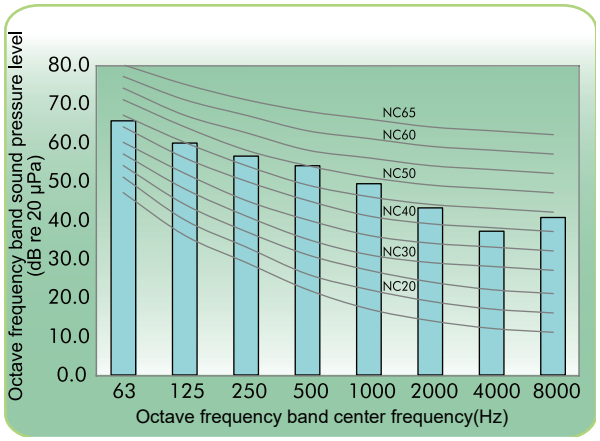

GMV-280WM/B-X(P)

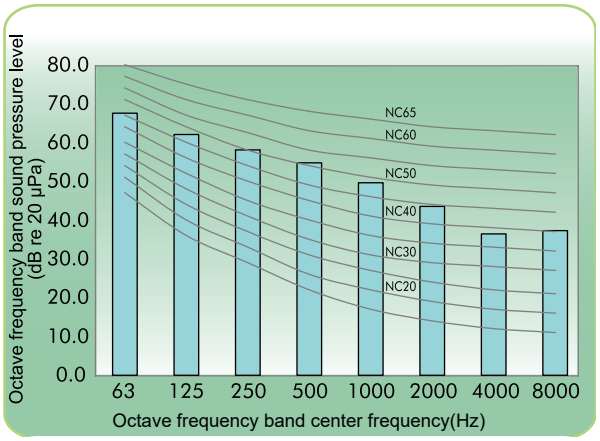

GMV-335WM/B-X(P)

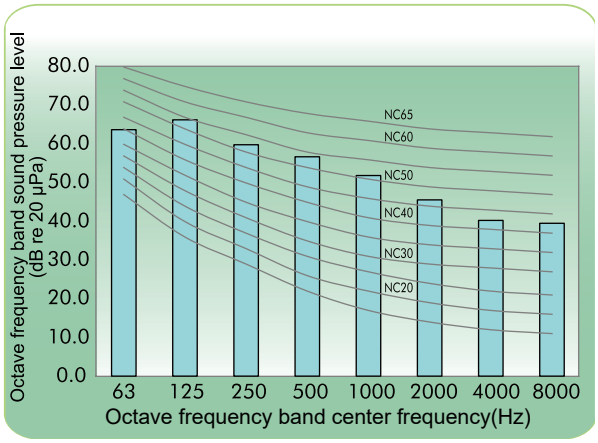

GMV-400WM/B-X(P)

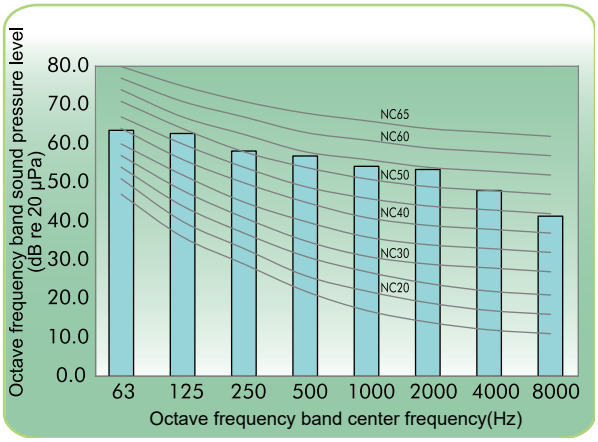

GMV-450WM/B-X(P)

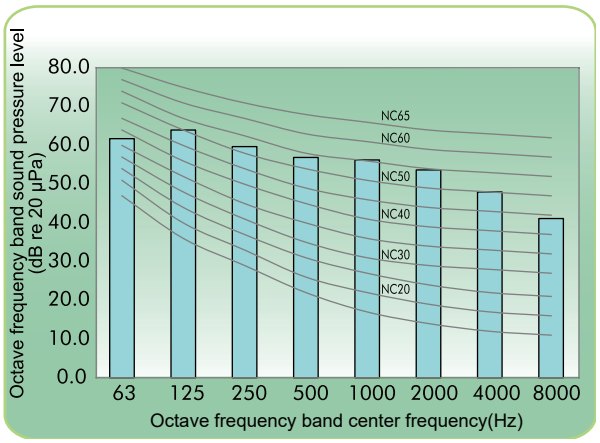

GMV-504WM/B-X(P)

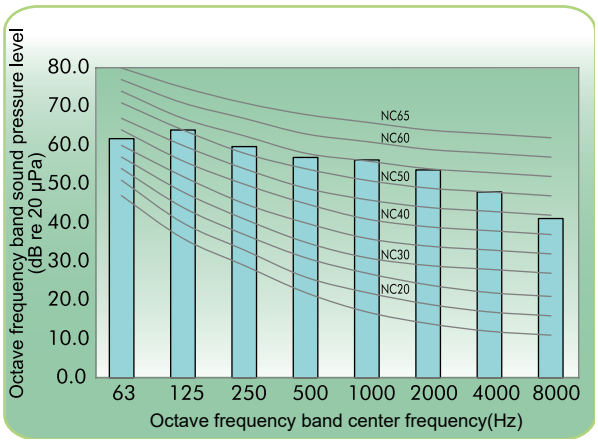

GMV-560WM/B-X(P)

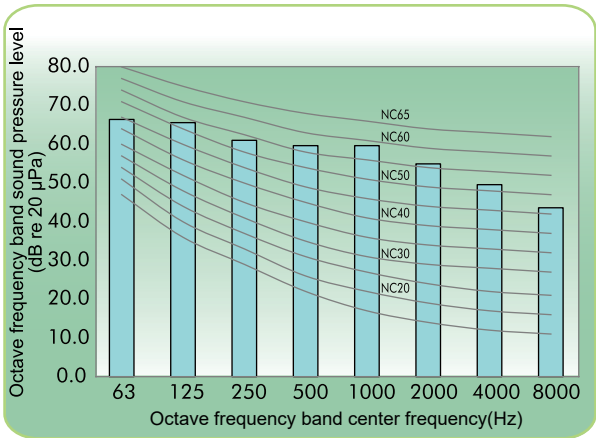

GMV-615WM/B-X(P)

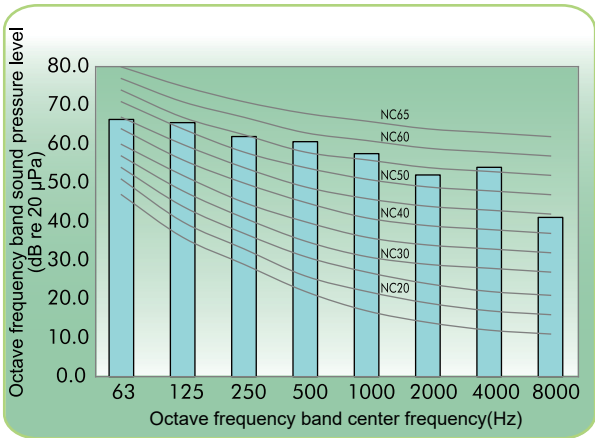

GMV-680WM/B-X(P)

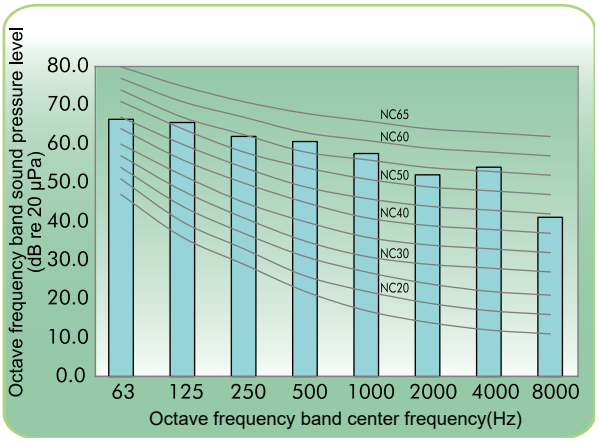

GMV-730WM/B-X(P),GMV-785WM/B-X(P),GMV-850WM/B-X(P)

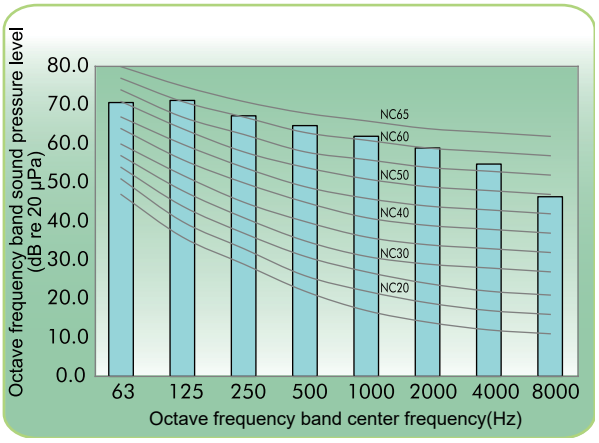

GMV-900WM/B-X(P),GMV-952WM/B-X(P),GMV-1010WM/B-X(P)

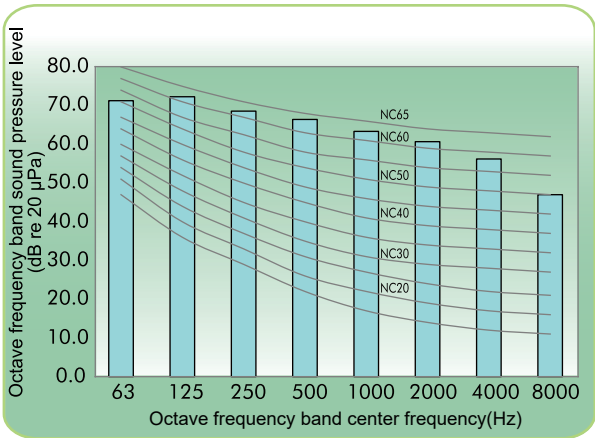

6 UNIT GRAVITY CENTER DIAGRAMS

Unit : mm

GMV-224WM/B-X(P),GMV-280WM/B-X(P),GMV-335WM/B-X(P).

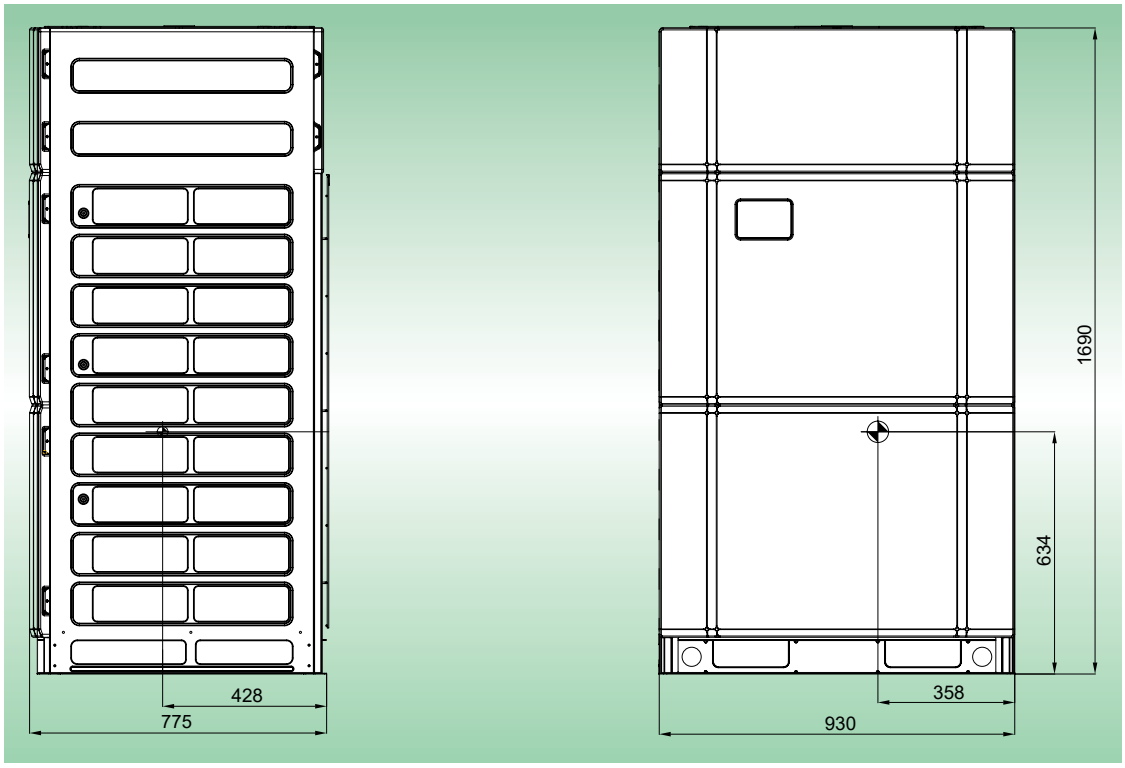

GMV-400WM/B-X(P),GMV-450WM/B-X(P),GMV-504WM/B-X(P)

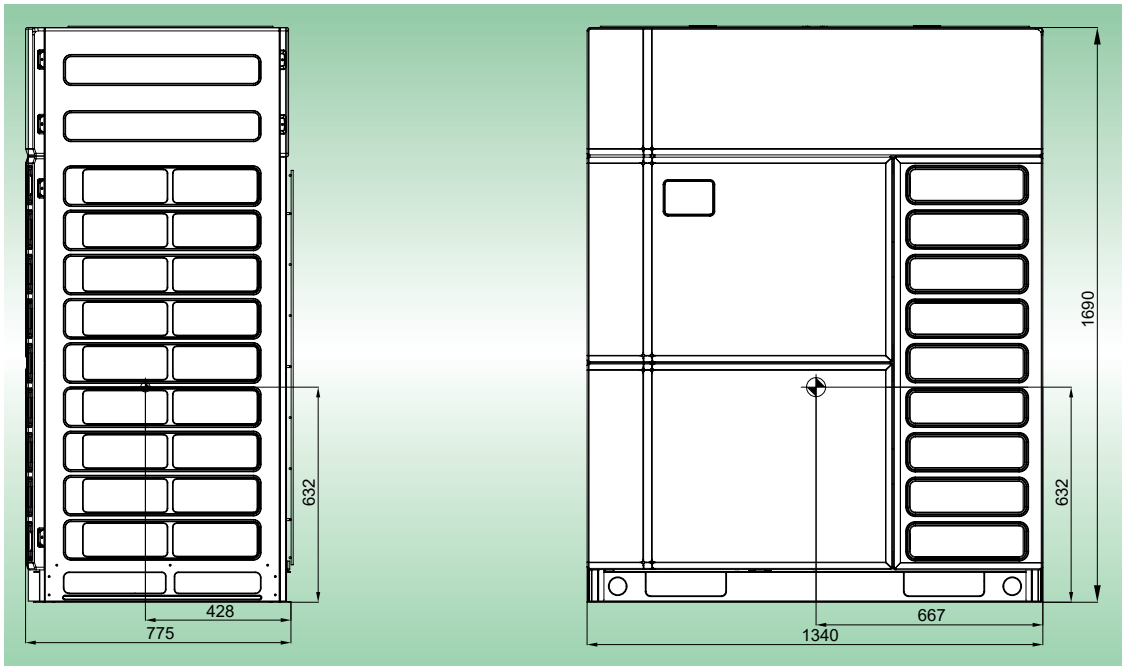

GMV-560WM/B-X(P),GMV-615WM/B-X(P),GMV-680WM/B-X(P)

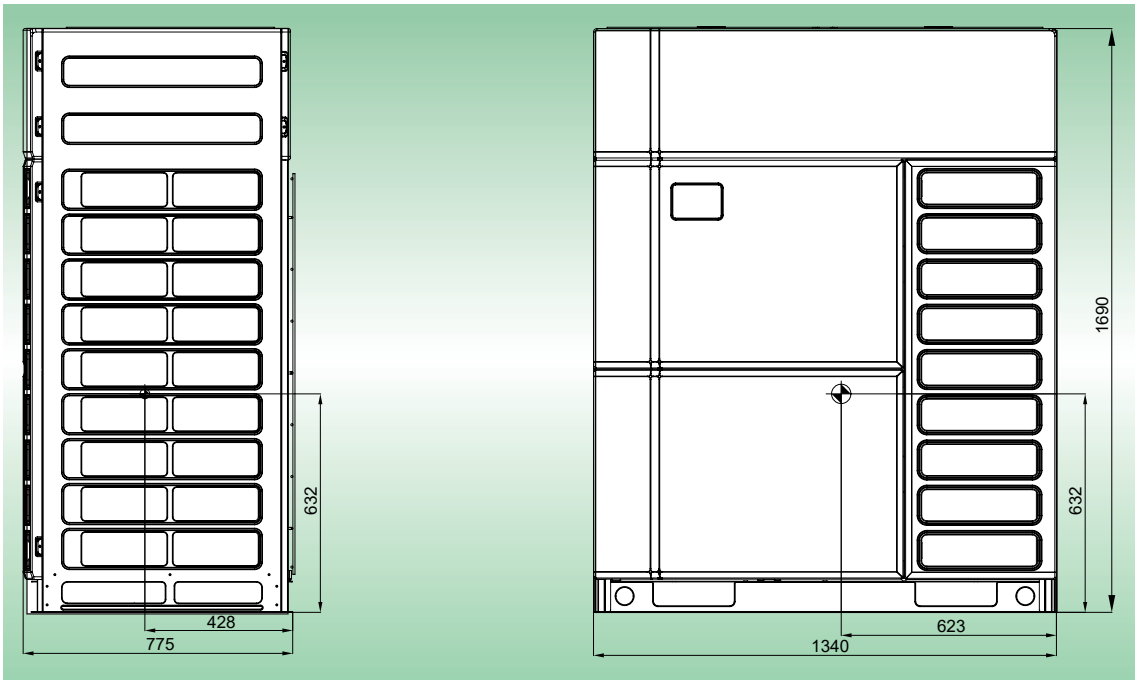

GMV-730WM/B-X(P),GMV-785WM/B-X(P),GMV-850WM/B-X(P) , GMV-900WM/B-X(P), GMV-952WM/B-X(P), GMV-1010WM/B-X(P).

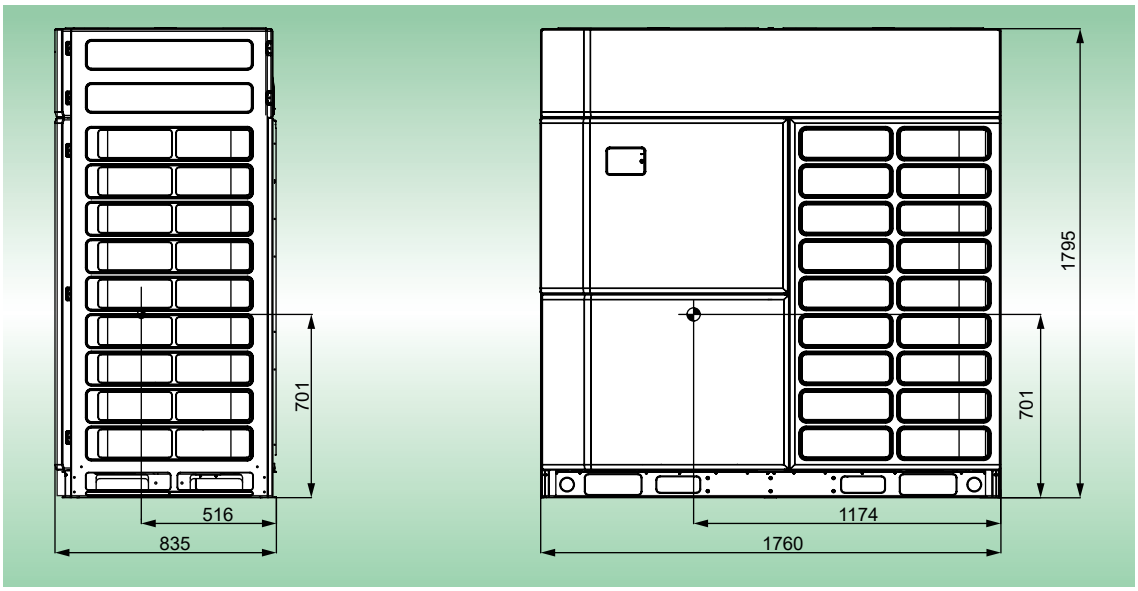

7 UNIT INSTALLATION SPACE REQUIREMENTS

7.1 Outline dimension and installation hole

GMV-224WM/B-X(P), GMV-280WM/B-X(P) and GMV-335WM/B-X(P)

Unit : mm

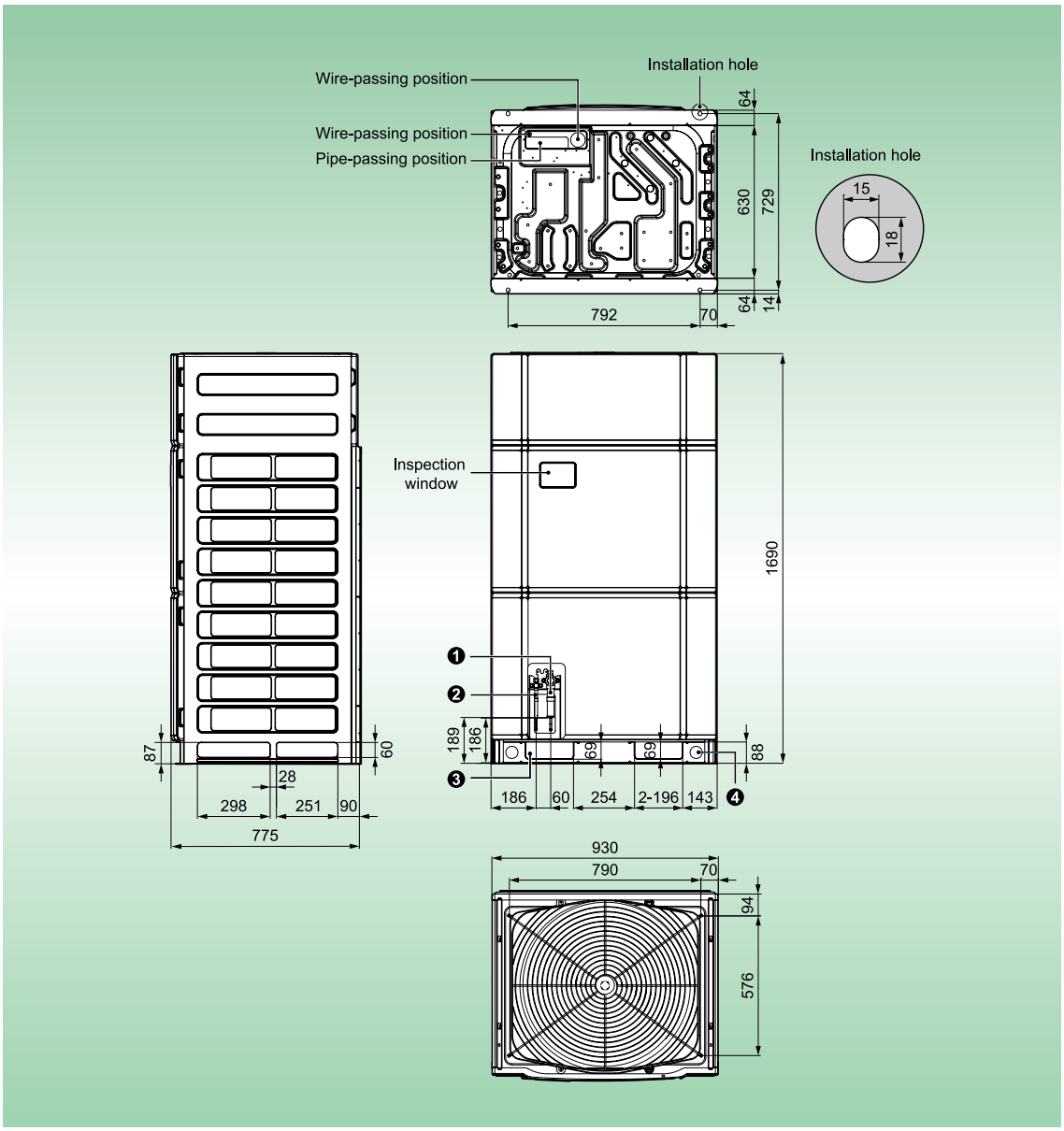

No.	Name	Pipe diameter		
		GMV-224WM/B-X(P)	GMV-280WM/B-X(P)	GMV-335WM/B-X(P)
①	Gas pipe	Φ19.05	Φ22.2	Φ25.4
②	Liquid pipe	Φ9.52	Φ9.52	Φ12.7
③	Pipe and wiring passing hole (L×W)	196×69	196×69	196×69
④	Lifting hole	Φ50	Φ50	Φ50

GMV-400WM/B-X(P), GMV-450WM/B-X(P), GMV-504WM/B-X(P), GMV-560WM/B-X(P), GMV-615WM/B-X(P) and GMV-680WM/B-X(P).

Unit : mm

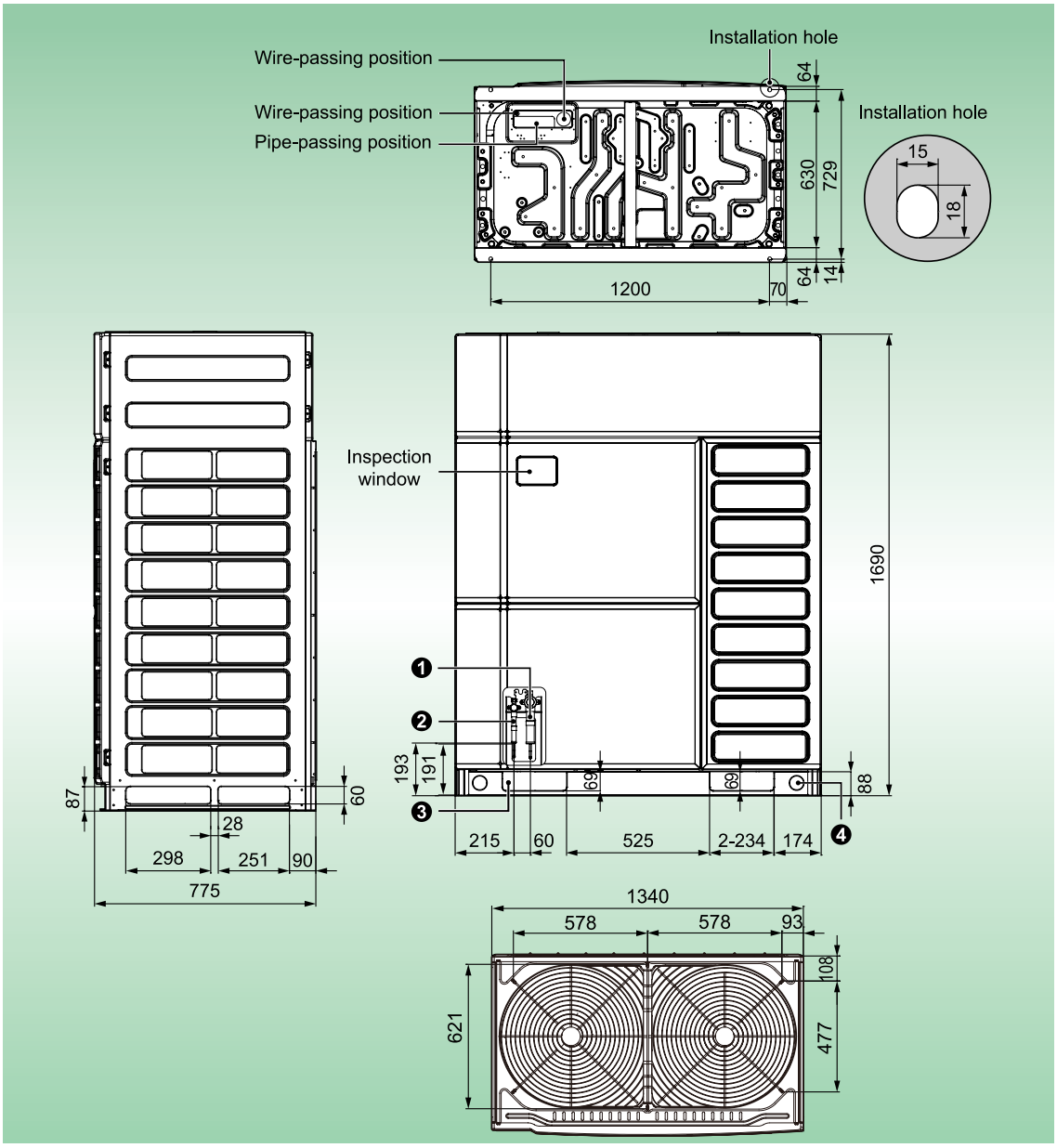

No.	Name	Pipe diameter		
		GMV-400WM/B-X(P)	GMV-450WM/B-X(P)	GMV-504WM/B-X(P)
①	Gas pipe	Φ25.4	Φ28.6	Φ28.6
②	Liquid pipe	Φ12.7	Φ12.7	Φ15.9
③	Pipe and wiring passing hole (L×W)	234×69	234×69	234×69
④	Lifting hole	Φ50	Φ50	Φ50

No.	Name	Pipe diameter		
		GMV-560WM/B-X(P)	GMV-615WM/B-X(P)	GMV-680WM/B-X(P)
①	Gas pipe	Φ28.6	Φ28.6	Φ28.6
②	Liquid pipe	Φ15.9	Φ15.9	Φ15.9
③	Pipe and wiring passing hole (L×W)	234×69	234×69	234×69
④	Lifting hole	Φ50	Φ50	Φ50

GMV-730WM/B-X(P), GMV-785WM/B-X(P), GMV-850WM/B-X(P), GMV-900WM/B-X(P), GMV-952WM/B-X(P), GMV-1010WM/B-X(P).

Unit : mm

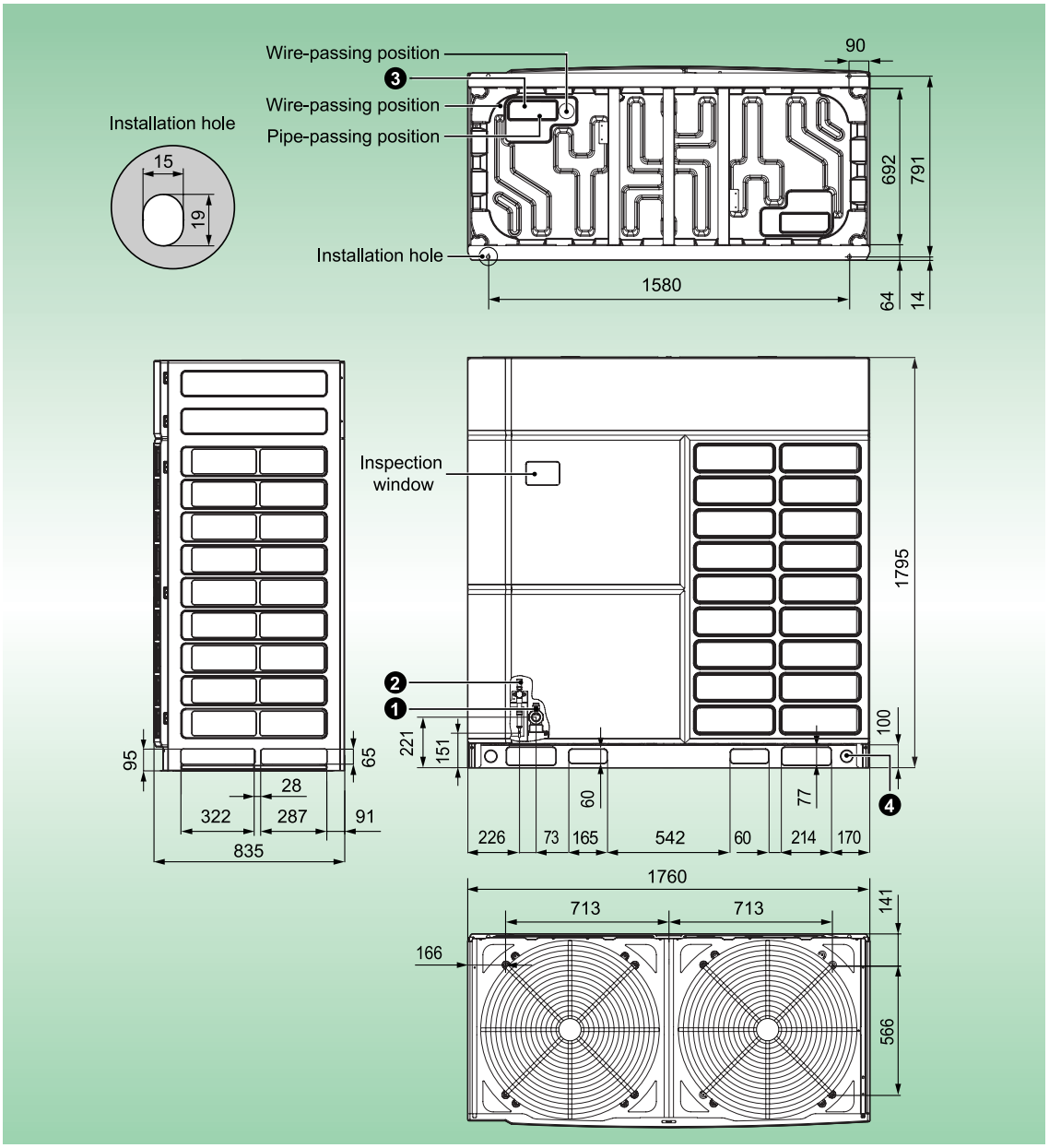

No.	Name	Pipe diameter		
		GMV-730WM/B-X(P)	GMV-785WM/B-X(P)	GMV-850WM/B-X(P)
①	Gas pipe	Φ31.8	Φ31.8	Φ31.8
②	Liquid pipe	Φ19.05	Φ19.05	Φ19.05
③	Pipe and wiring passing hole (L×W)	213×83	213×83	213×83
④	Lifting hole	Φ50	Φ50	Φ50

No.	Name	Pipe diameter		
		GMV-900WM/B-X(P)	GMV-952WM/B-X(P)	GMV-1010WM/B-X(P)
①	Gas pipe	Φ31.8	Φ31.8	Φ38.1
②	Liquid pipe	Φ19.05	Φ19.05	Φ19.05
③	Pipe and wiring passing hole (L×W)	213×83	213×83	213×83
④	Lifting hole	Φ50	Φ50	Φ50

7.2 Location selection cautions for ODU

(1) Install the unit at a place where can withstand the weight of the unit and make sure the unit would not shake or fall off.
(2) Fully consider the influence of strong winds, typhoons, earthquakes and other natural disasters when selecting the installation site, and strengthen the installation.
(3) Avoid the influence from flammable, explosive, corrosive gases and exhaust gases.
(4) Ensure that there is a certain space for heat exchanging and maintenance operation.
(5) Outdoor units and indoor units should be as close as possible to minimize the length and angle of the cooling pipes.
(6) Do not allow children to approach the unit. Preventive measures should be taken to prevent children from accessing the unit.
(7) The unit should not be installed at places with high environmental pH or high voltage fluctuations, such as vehicles or ships.
(8) Do not install the unit at the place where is close to the equipment that generates electromagnetic waves which can influence the control system and cause operation error.

7.3 Installation space requirements of ODU

Maintenance space and unit ventilation should be considered when installing the unit. Installation method should based on the actual situation.

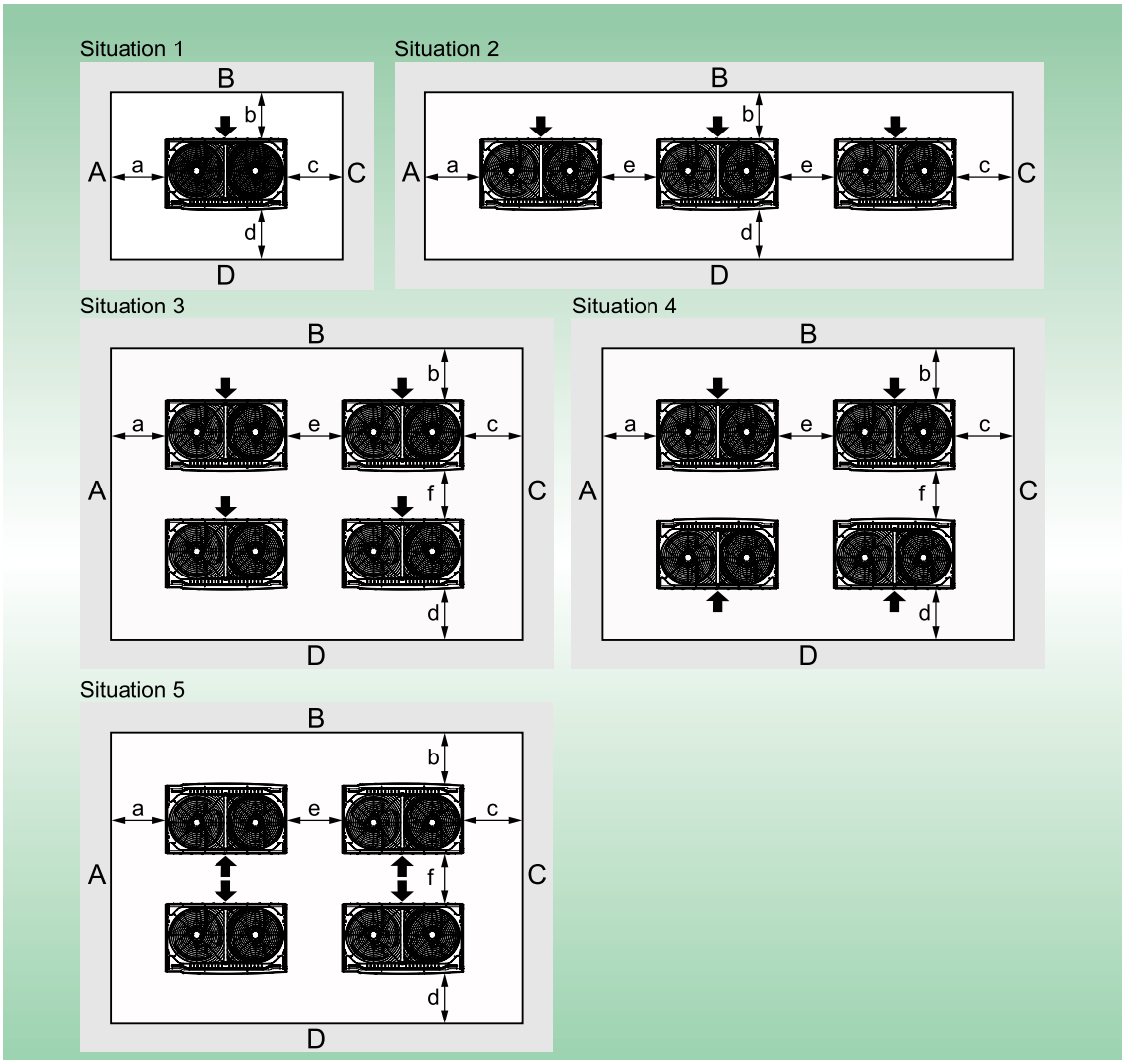

Situation	A+B+C+D	A+B
Situation 1	a≥300 b≥100 c≥100 d≥500	a≥300 b≥300
Situation 2	a≥300 b≥100 c≥100 d≥500 e≥100	a≥300 b≥300 e≥400
Situation 3	a≥300 b≥100 c≥100 d≥500 e≥200 f≥600	-
Situation 4	a≥300 b≥100 c≥100 d≥100 e≥200 f≥500	-

Situation	A+B+C+D	A+B
Situation 5	a≥300 b≥500 c≥100 d≥500 e≥200 f≥900	-

NOTES:

a. The installation space shown above is based on the cooling operation when the outdoor temperature is 35°C. If the outdoor temperature exceeds 35°C or the heat load is large, and all outdoor units are operating at an excess capacity, the space at the suction side should be increased.

b. When disassembling or installing the unit, the operation may be affected by other obstacles, and the distance from the unit to the wall's surface may be appropriately increased.

c. When two or more units are installed and placed, the operation may be affected between the adjacent units. The distance between the two adjacent units should be over 100mm.

Unit : mm

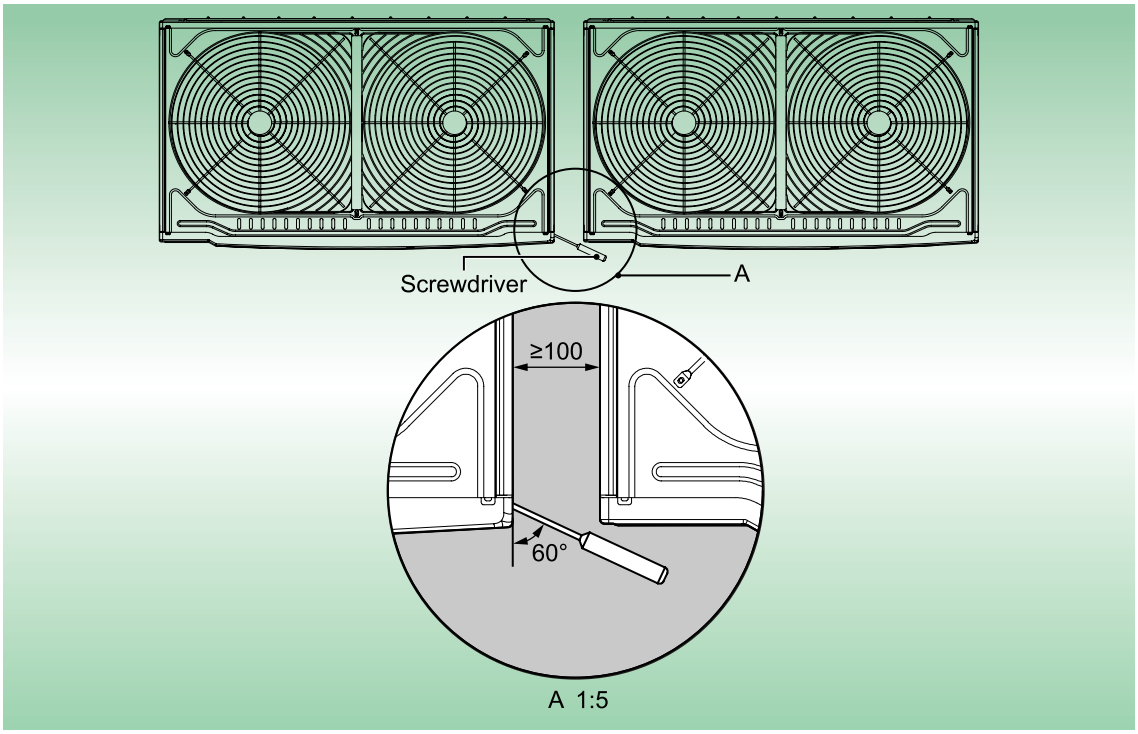

d. If the unit is installed in the space with walls at the front, back, left and right, the wall height at the left and right side of the unit shall have no limit; wall height at return air side is below 500mm and at the front side is below 1,500mm. If the unit is installed in a space with only two walls A and B (B is at the air inlet side), the heights of A and B are both not limited.

e. If the wall exceeds the above value, increase the space as follows.

Unit : mm

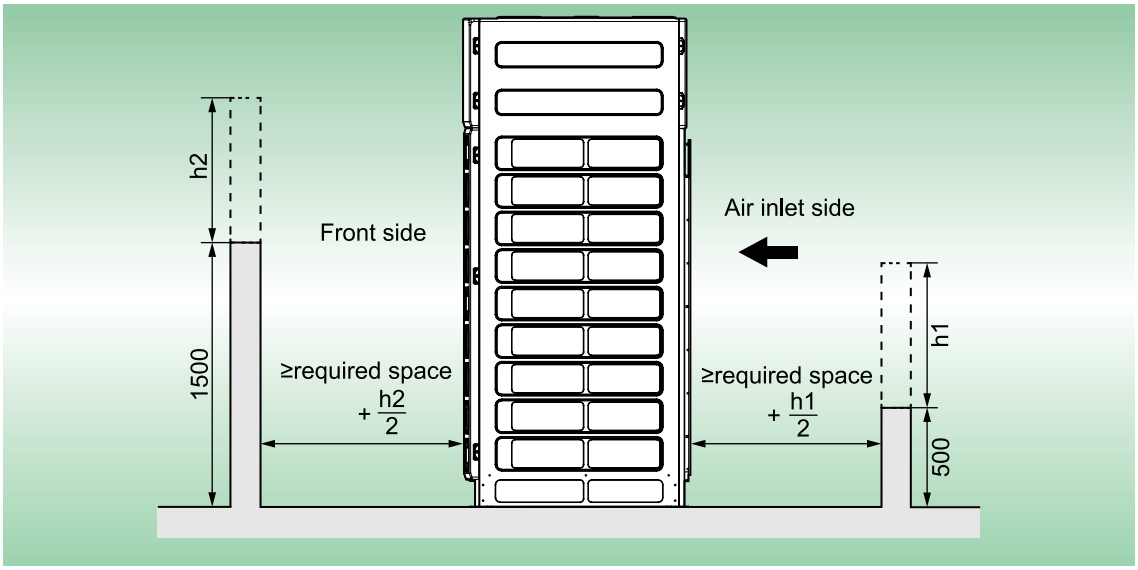

f. If there are any obstacles above the unit, see the requirements below:

Generally, the top of the unit is required to be more than 3000 mm from the top wall. If the front, back, left and right sides of the unit are open space, the unit is required to be at least 1500mm away from the top wall, as shown in the figure below. Meanwhile, if the distance between the unit and the top wall is less than 1500mm, or if the space around the unit is not open, an exhaust duct should be connected for good ventilation.

Unit : mm

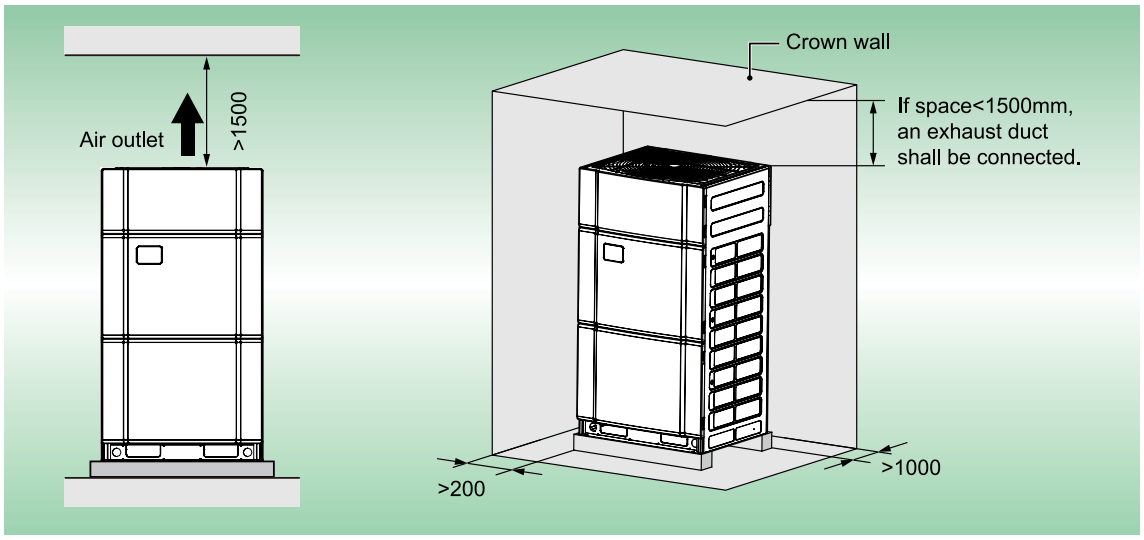

7.4 Seasonal wind considerations

(1) Anti-monsoon installation requirements for unit which is not connected with the exhaust duct:
When the exhaust duct is not connected to the unit, a protective cover should be installed according to the seasonal wind circumstances. As shown in the picture below:
Note: The photo is only for reference. Please refer to the site.

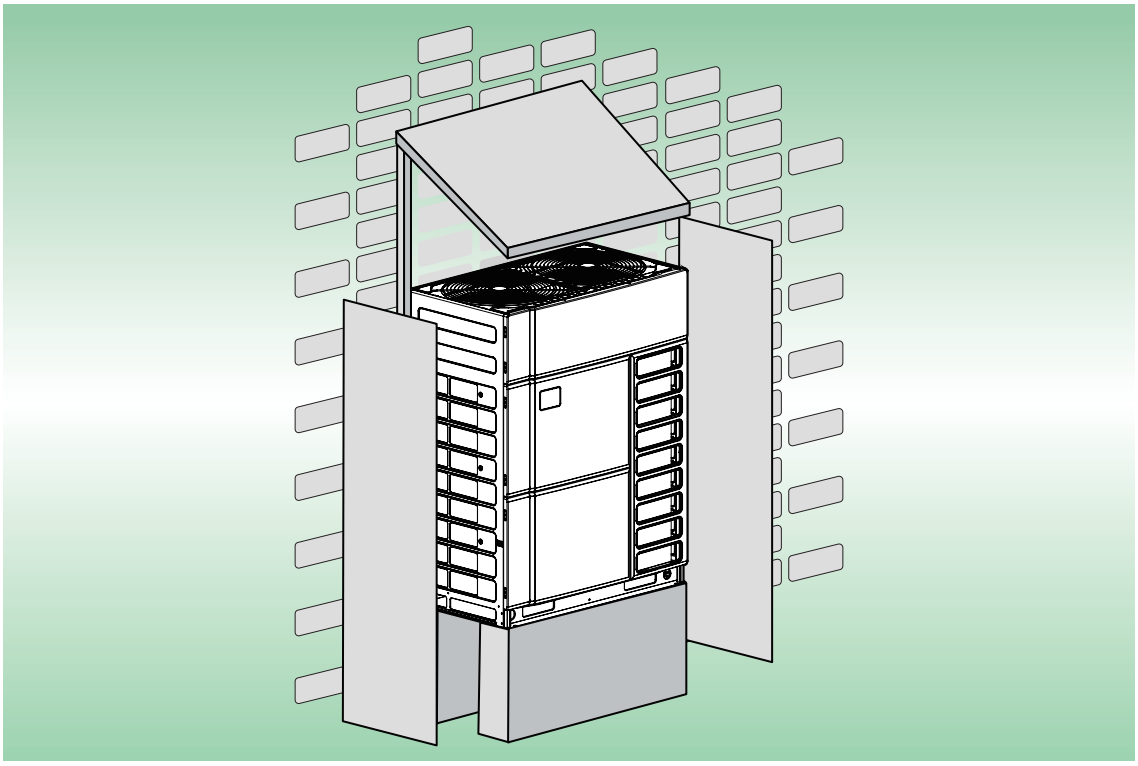

(2) Anti-monsoon installation requirements for unit which is connected with exhaust duct
When the unit is connected with the exhaust duct in the weather condition of anti-monsoon, the duct should be towards leeward direction, for avoiding the situation of fan reversed and weakening the air exhausting efficiency. As the picture shown below:

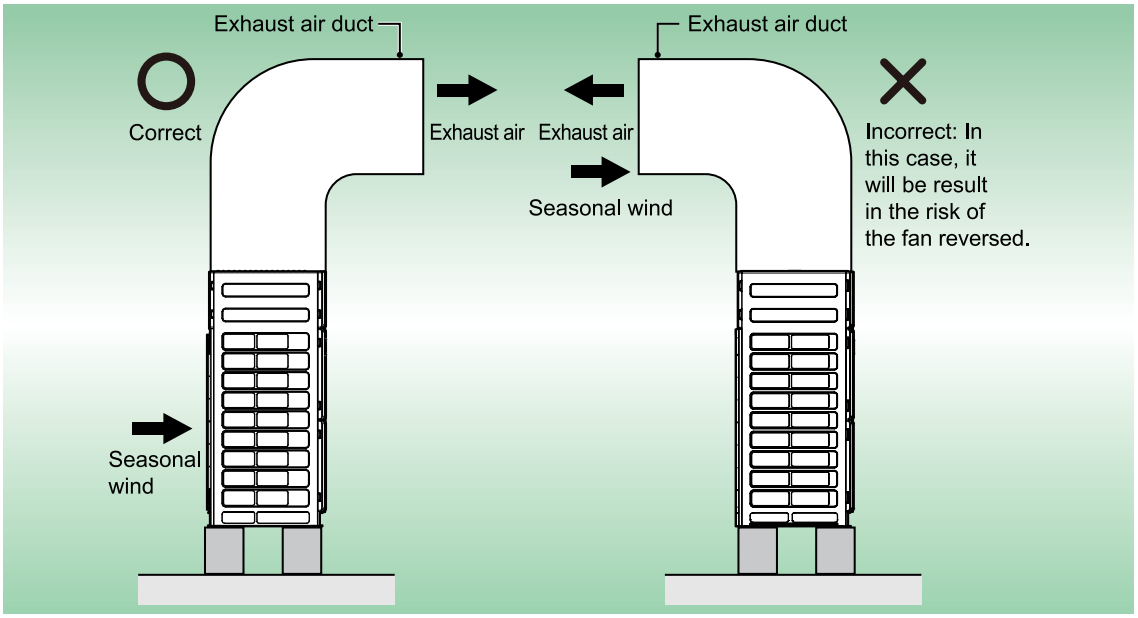

7.5 Snowy weather considerations

A base with certain height should be installed when installing the unit for snowy weather considerations.

Note: The photo is only for reference. Please refer to the installation site.

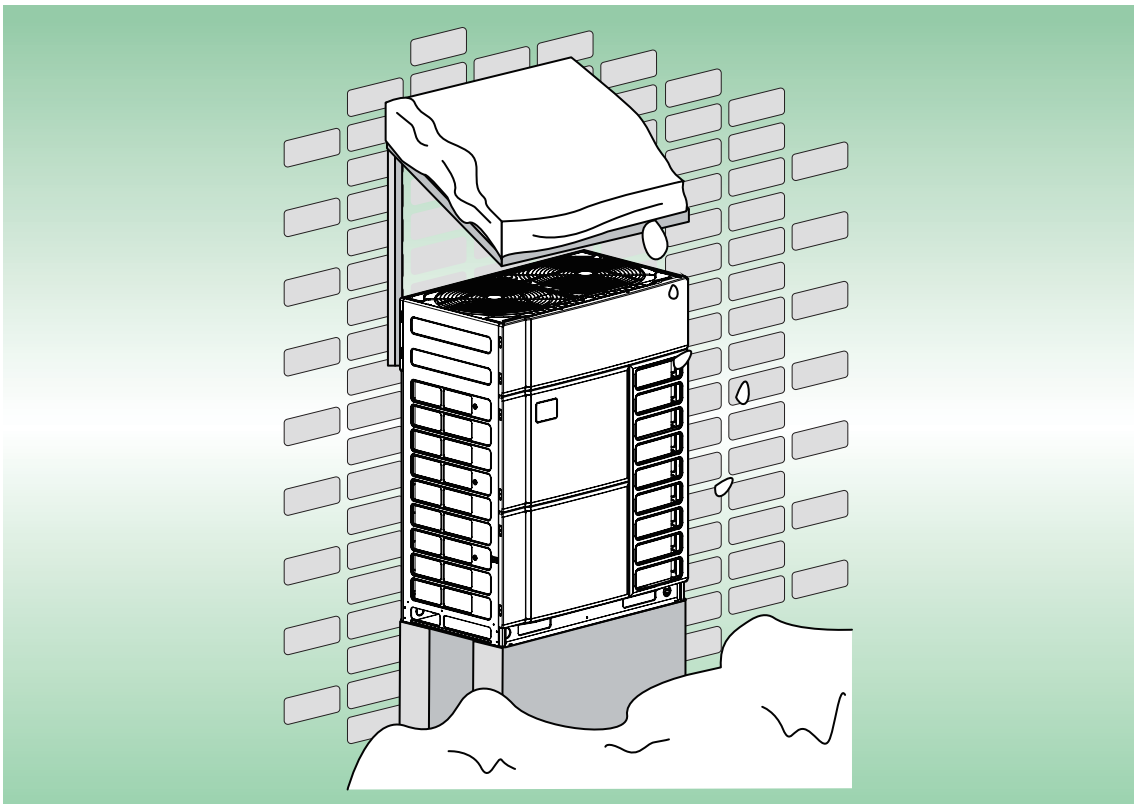

7.6 Installation requirements for mechanical floor

When the outdoor unit is installed in the mechanical floor, it needs to be connected with an air exhaust duct.

The opening ratio of the shutters in the mechanical floor shall be not less than 60%, and the horizontal angle of louvers shall be less than 20°.

8 PIPING DESIGN

8.1Allowable pipe length and height difference among indoor and outdoor units

"Y" type branch is adopted to connect the indoor and outdoor units. Connecting method is shown below.

Unit : m

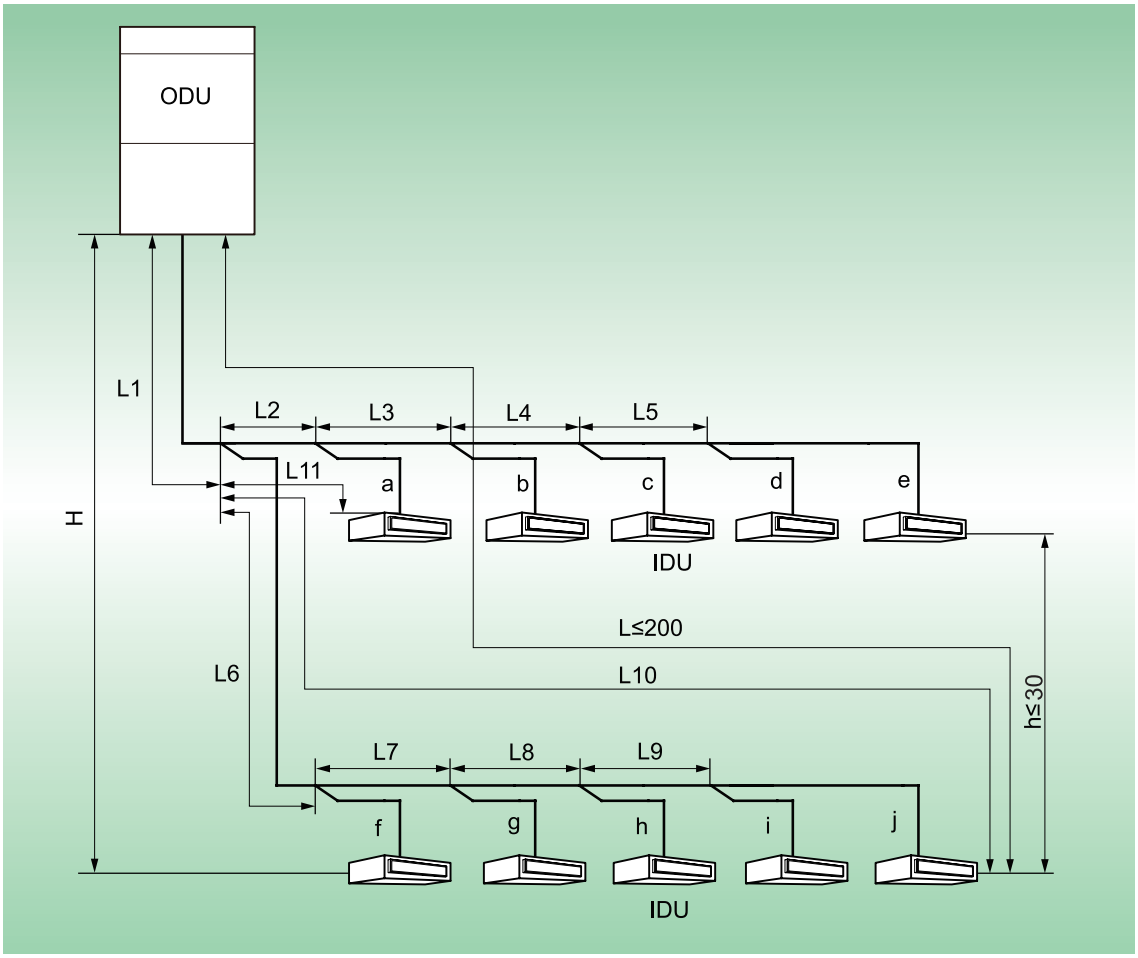

L10: Length from the first branch to the farthest IDU;

L11: Length from the first branch to the nearest IDU;

The equivalent length of outdoor branch is 0.5m and the equivalent distance of indoor branch is 0.5m.

Item		Length (m)	Remark
Total actual connection pipe length		≤1,000	L1+L2+L3+L4+…+L9+a+b+…+i+j
The length between ODU and the furthest IDU	Actual length	≤200	L1+L6+L7+L8+L9+j
	Equivalent length	≤240	—
The distanece between the first indoor branch and the furthest IDU*		≤120	L6+L7+L8+L9+j
The level difference between ODU and IDU	Outdoor unit at upper	≤100	—
	Outdoor unit at lower	≤110	—
The level difference between IDUs		<30	—

NOTES:

a.*Normally, the pipe length from the first branch of IDU to the farthest IDU shall be less than 40m. Whereas, when those three conditions as below are achieved, the length can reach 120m.

① Actual length of pipe in total: L1+L2x2+L3x2+L4x2+…+L9x2+a+b+…+i+j≤1000m.

② Length between each IDU and its nearest branch a, b, c, d, e, f, g, h, i, j≤40m.

③ Difference between the pipe length from the first branch of IDU to the farthest IDU and the pipe length from the first branch of IDU to the nearest IDU: L10-L11≤40m.

b.When the ODU is above the IDU and the vertical drop exceeds 50m, please contact the engineer; when the ODU is below the IDU and the vertical drop exceeds 90m, please contact the engineer also.

When the ODU is above the IDU and the vertical drop exceeds 50m, the liquid pipe size from the ODU to the first branch of IDU must be enlarged.

When the ODU is below the IDU and the vertical drop between the IDU and ODU is more than 40m, the liquid pipe size from the ODU to the first branch of IDU must be enlarged.

c.When the vertical drop among IDUs is more than 15m, the liquid pipe size from the ODU to the first branch of IDU must be enlarged one size extra.

d.When the maximum length from the ODU to the main pipe of the first branch exceeds 90m, then adjust the pipe size of the gas pipe and liquid pipe of main pipe according to the following table.

ODU Model	Gas pipe size(mm)	Liquid pipe size(mm)
22.4≤Q≤25.2	No need to enlarge pipe size	No need to enlarge pipe size
25.2<Q≤30	No need to enlarge pipe size	Φ12.7
30<Q≤40	Φ28.6	Φ15.9
40<Q≤45	Φ31.8	Φ15.9
45<Q≤68	Φ31.8	Φ19.05
68<Q≤96	Φ38.1	Φ22.2
96<Q≤136	Φ41.3	Φ22.2
136<Q≤186	Φ44.5	Φ22.2
186<Q≤272	Φ51.4	Φ25.4
Q>272	Φ54.1	Φ28.6

e.If the liquid pipe is enlarged for a situation from b~d, please do not enlarge any more.

f.If the length between an IDU and its nearest branch is above 15m, then increase one size extra for the liquid pipe (only for the pipe size that is≤6.35mm) and gas pipe (only for the pipe size that is≤9.52mm) of IDU.

8.2 Installation requirements for pipes among outdoor units

(1) The pipe among the outdoor modules must be at the same level with the modules pipe connector or under the modules pipe connector. Otherwise, the refrigeration oil will remained in the pipe.

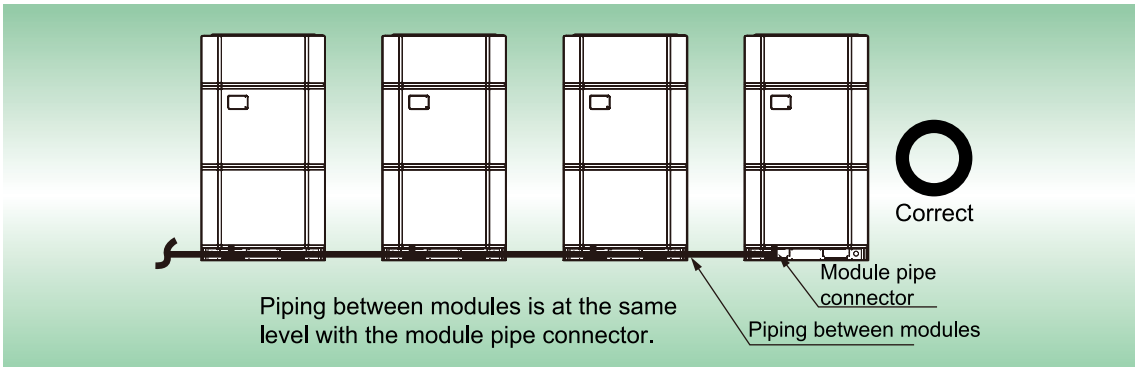

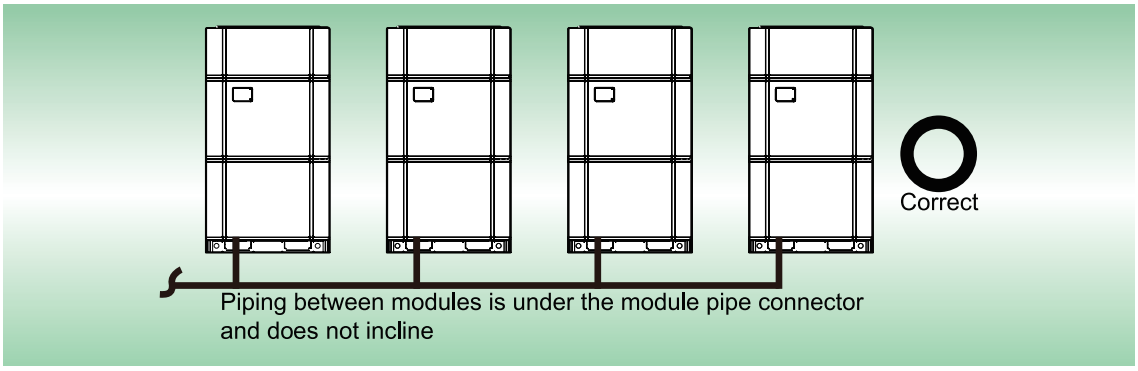

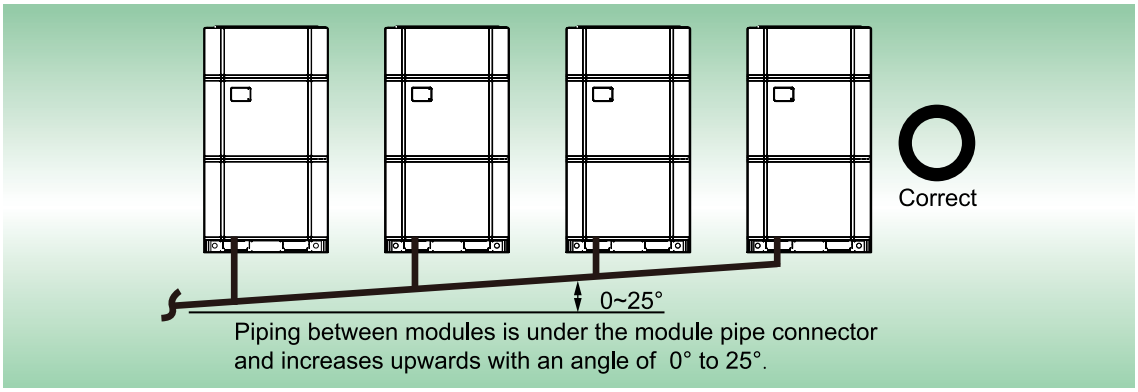

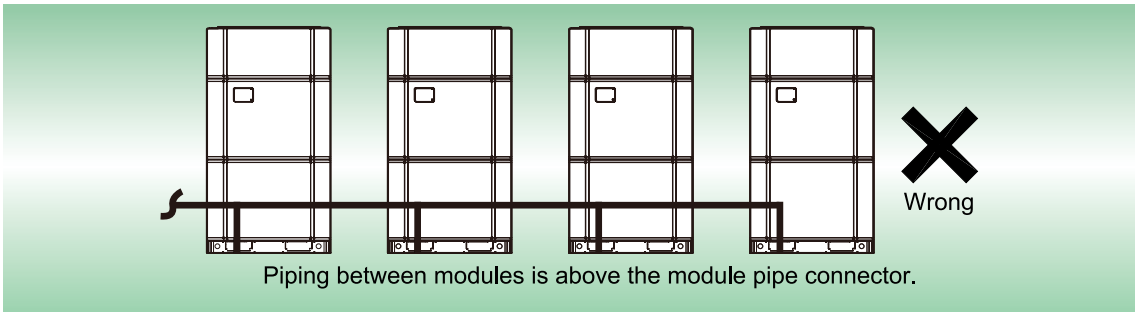

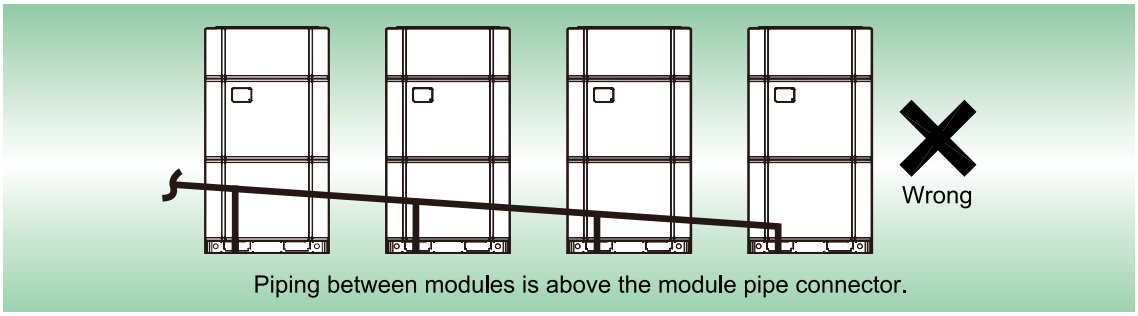

(2) The level difference and the length of the pipe between the outdoor units shown as follows.

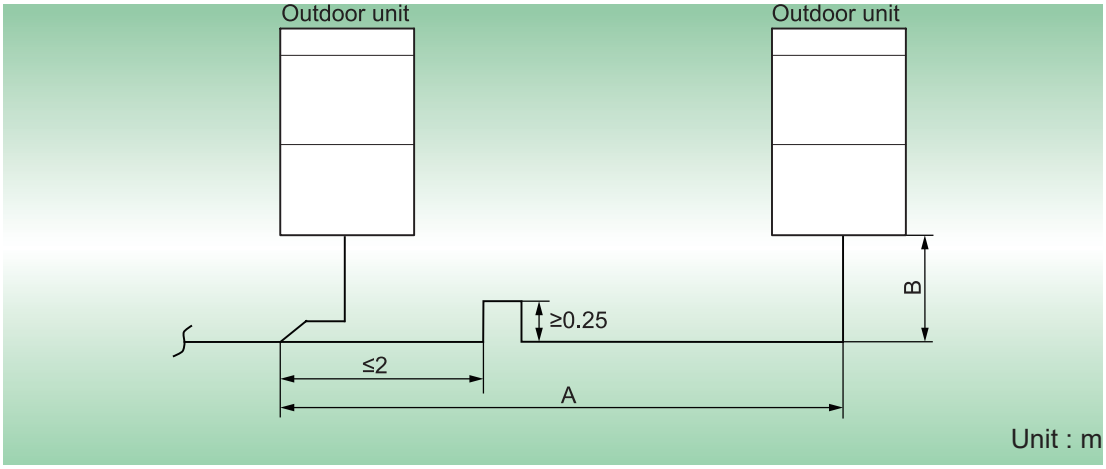

NOTE:

When the distance A+B between the outdoor modules exceeds 2m, U-type oil trap should be added at low-pressure gas pipe and it should be no more than 2m away from the outdoor branch, and A+B should below 10m. The level difference among the outdoor units should be 0m.

8.3 Piping selection

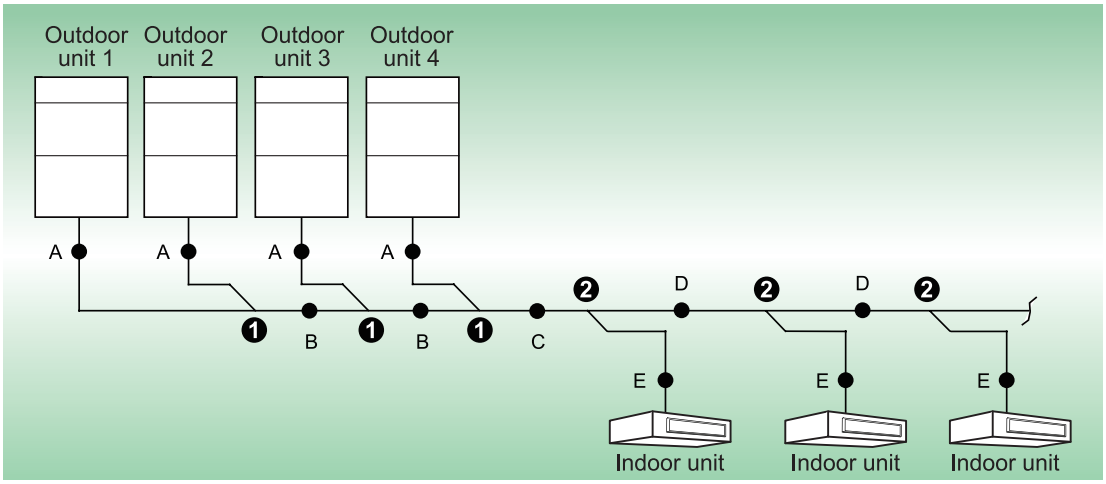

(1) When several ODUs need to be modular combined, the capacity of each ODU should be: ODU 4≥ODU 3≥ODU 2≥ODU 1.

(2) As shown in the figure, pipe “A” refers to the part from ODU to the branch of the ODU. The pipe size is based on the capacity of upstream module.

Basic module	Pipe "A"	
	Gas pipe(mm)	Liquid pipe(mm)
GMV-224WM/B-X(P)	Φ19.05	Φ9.52
GMV-280WM/B-X(P)	Φ22.2	Φ9.52
GMV-335WM/B-X(P)	Φ25.4	Φ12.7
GMV-400WM/B-X(P)	Φ25.4	Φ12.7
GMV-450WM/B-X(P)	Φ28.6	Φ12.7
GMV-504WM/B-X(P)	Φ28.6	Φ15.9
GMV-560WM/B-X(P)	Φ28.6	Φ15.9
GMV-615WM/B-X(P)	Φ28.6	Φ15.9
GMV-680WM/B-X(P)	Φ28.6	Φ15.9
GMV-730WM/B-X(P)	Φ31.8	Φ19.05
GMV-785WM/B-X(P)	Φ31.8	Φ19.05
GMV-850WM/B-X(P)	Φ31.8	Φ19.05
GMV-900WM/B-X(P)	Φ31.8	Φ19.05
GMV-952WM/B-X(P)	Φ31.8	Φ19.05
GMV-1010WM/B-X(P)	Φ38.1	Φ19.05

(3) Pipe "B" refers to the parts between branches of ODUs. Pipe "C" refers to the part from branch of the last ODU to branch of the nearest IDU.

Pipe size (between two branches from basic modules) is based on the total capacity of upstream modules.

Total rated capacity of upstream module Q (kW)	Pipe "B"	
	Gas pipe (mm)	Liquid pipe (mm)
Q≤25.2	Φ19.05	Φ9.52
25.2<Q≤30.0	Φ22.2	Φ9.52
30.0<Q≤40.0	Φ25.4	Φ12.7
40.0<Q≤45.0	Φ28.6	Φ12.7
45.0<Q≤68.0	Φ28.6	Φ15.9
68.0<Q≤96.0	Φ31.8	Φ19.05
96.0<Q≤136.0	Φ38.1	Φ19.05
136.0<Q≤186.0	Φ41.3	Φ19.05
186.0<Q≤272.0	Φ44.5	Φ22.2
Q>272.0	Φ51.4	Φ25.4

(4) Pipe "D" refers to the parts between the branches of IDUs.

Pipe size (between two branches at indoor unit side) is based on the total capacity of downstream indoor unit(s).

Total rated capacity X (kW) of downstream IDUs	Pipe "D"	
	Gas pipe (mm)	Liquid pipe (mm)
X≤5.0	Φ12.7	Φ6.35
5.0<X≤14.2	Φ15.9	Φ9.52
14.2<X≤25.2	Φ19.05	Φ9.52
25.2<X≤30.0	Φ22.2	Φ9.52
30.0<X≤40.0	Φ25.4	Φ12.7
40.0<X≤45.0	Φ28.6	Φ12.7
45.0<X≤68.0	Φ28.6	Φ15.9
68.0<X≤96.0	Φ31.8	Φ19.05
96.0<X≤136.0	Φ38.1	Φ19.05
136.0<X≤186.0	Φ41.3	Φ19.05

Total rated capacity X (kW) of downstream IDUs	Pipe "D"	
	Gas pipe (mm)	Liquid pipe (mm)
186.0<X≤272.0	Φ44.5	Φ22.2
X>272.0	Φ51.4	Φ25.4

(5) Pipe "E" refers to the part from branch of IDU to IDU
Branch should be matched with fitting pipe of indoor unit.

Rated capacity C (kW) of IDU	Pipe "E"	
	Gas pipe (mm)	Liquid pipe (mm)
C≤2.8	Φ9.52	Φ6.35
2.8<C≤5.0	Φ12.7	Φ6.35
5.0<C≤14.2	Φ15.9	Φ9.52
14.2<C≤25.2	Φ19.05	Φ9.52
25.2<C≤30.0	Φ22.2	Φ9.52
30.0<C≤40.0	Φ25.4	Φ12.7
40.0<C≤45.0	Φ28.6	Φ12.7

(6) Select the branch " ① " for outdoor module.

Total capacity of upstream module Q(kW)	Model
Q≤186	ML01/A
Q>186	ML02/A

(7) Select the branch " ② " for indoor module.
Branch selection for indoor units should be based on the total capacity of downstream indoor unit(s). Refer to the following table.

Type	Total rated capacity of downstream IDU X (kW)	Model
Y type branch	X<20.0	FQ01A/A
	20.0≤X≤30.0	FQ01B/A
	30.0<X≤70.0	FQ02/A
	70.0<X≤136.0	FQ03/A
	136.0<X≤272.0	FQ04/A
	272.0<X	FQ05/A
T type branch	X≤40.0	FQ14/H1
	X≤68.0	FQ18/H1
	68.0<X	FQ18/H2

9 COMMUNICATION WIRING SYSTEM

GMV X DC Inverter VRF system adopts CAN communication network, manual DIP switch and polarity to distinguish communication wire are needless for IDU and only need to set function DIP for IDU.

9.1 Connection method of communication wiring terminal

All communication connections are fixed by screws.

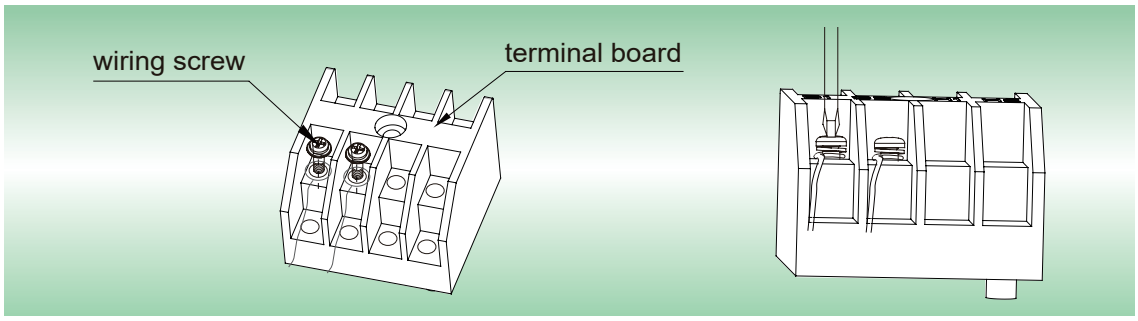

9.2 Requirements for communication wiring

9.2.1 Communication material

NOTE:

If the air conditioning unit is installed in a place with strong electromagnetic interference, the communication wire between the indoor unit and the wired controller must adopt shielded wires; the communication cord between indoor units (between indoor unit and outdoor unit) must use the shielded twisted pairs.

(1) Selection of communication wire between indoor unit and wired controller.

Material	Total length of communication wire between indoor unit and wired controller L (m)	Wire Quantity×Size(mm^2)	Material standard	Remarks
Light/Ordinary PVC sheathed twisted copper core cord	L≤250	2×0.75~2×1.25	IEC 60227-5:2007	Total length of communication wire cannot exceed 250m
Shielded light/ Ordinary PVC sheathed twisted copper core cord	L≤250	2×0.75~2×1.25	IEC 60227-5:2007	If unit is installed in places with intense magnetic field or strong interference, it is necessary to use shielded wire

The connection between the indoor unit and the wired controller is shown as below:

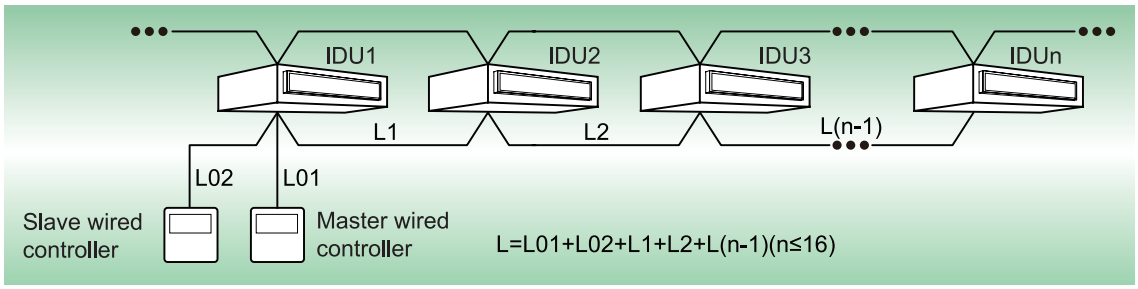

(2) Selection for communication wire between outdoor unit and indoor unit.

Material	Total Length L (m) of Communication cord between Indoor Unit and Indoor (Outdoor) Unit	Wire Quantity×Size(mm^2)	Material Standard	Remarks
Light/Ordinary PVC sheathed twisted copper core cord	L≤1000	≥2×0.75	IEC 60227-5:2007	If the wire diameter is increased to 2 × 1 mm^2, the length of the communication cord can be increased, while the total communication cord length cannot exceed 1500 m
Shielded light/ Ordinary PVC sheathed twisted copper core cord	L≤1000	≥2×0.75	IEC 60227-5:2007	If unit is installed in places with intense magnetic field or strong interference, it is necessary to use shielded wire

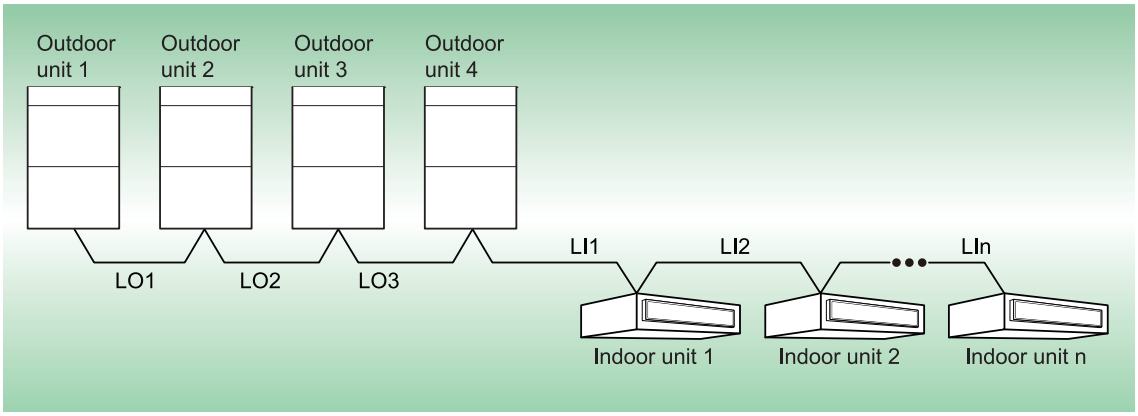

9.2.2 Communication connection method

The connection of IDU and ODU communication cord must adopt series connection, not starred connection; the very end IDU of IDU and ODU communication cord must be connected with the matched resistance (placed in the package bag of ODU), the ERV indoor unit is not suggested to be set at the master IDU.

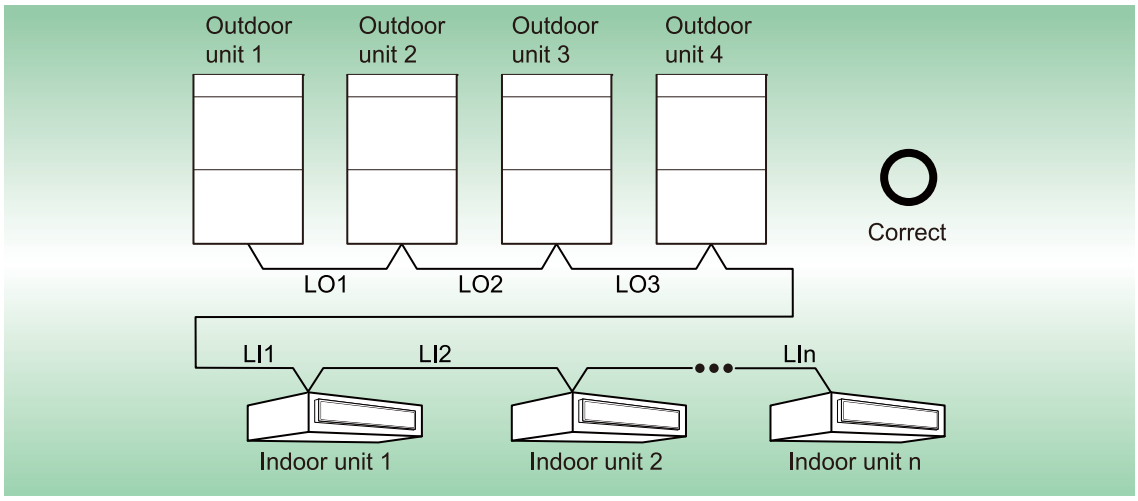

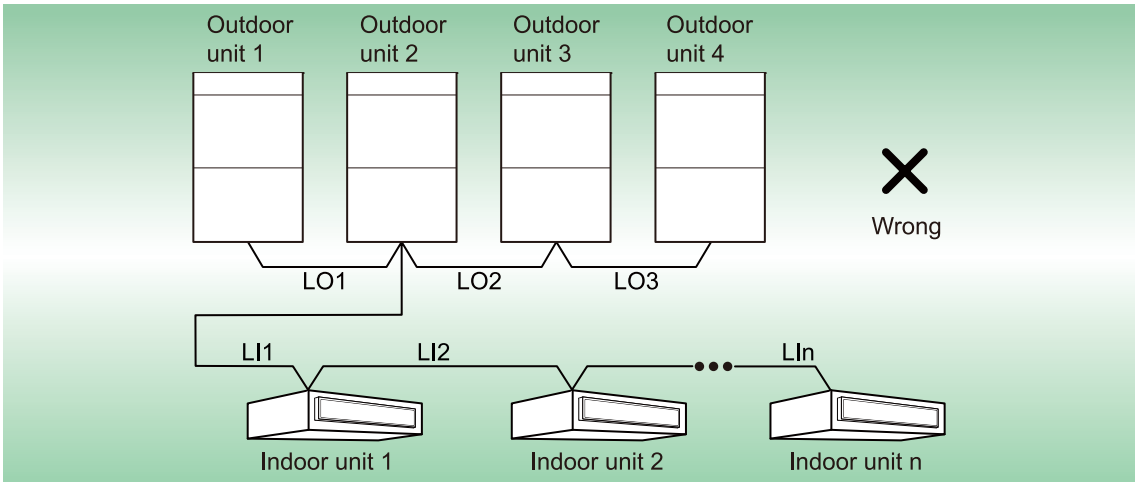
Outdoor unit 1
Outdoor unit 2
Outdoor unit 3
Outdoor unit 4
Wrong
LO1
LO2
LO3
LI1
LI2
LIn
Indoor unit 1
Indoor unit 2
Indoor unit n

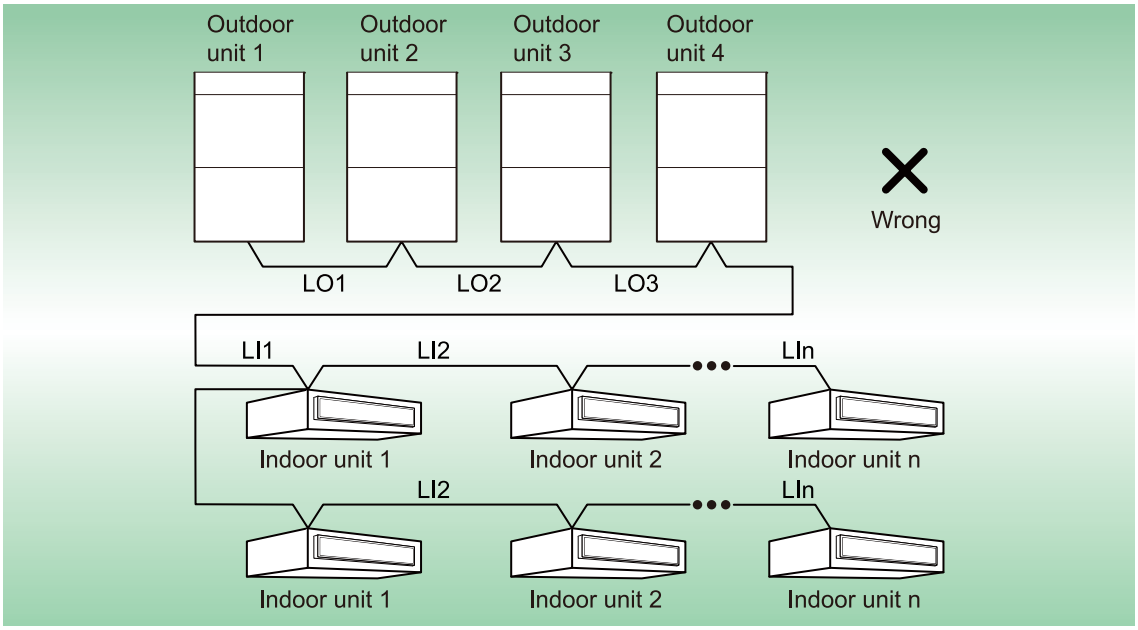
Outdoor unit 1
Outdoor unit 2
Outdoor unit 3
Outdoor unit 4
Wrong
LO1
LO2
LO3
LI1
LI2
LIn
Indoor unit 1
Indoor unit 2
Indoor unit n
LI2
LIn
Indoor unit 1
Indoor unit 2
Indoor unit n

9.3 Connection method of communication wiring

9.3.1 Communication connection between IDU and ODU

IDU and ODU are connected through the D1/D2 port of the communication terminal block. Connection for a single unit and modular connection are as follow:

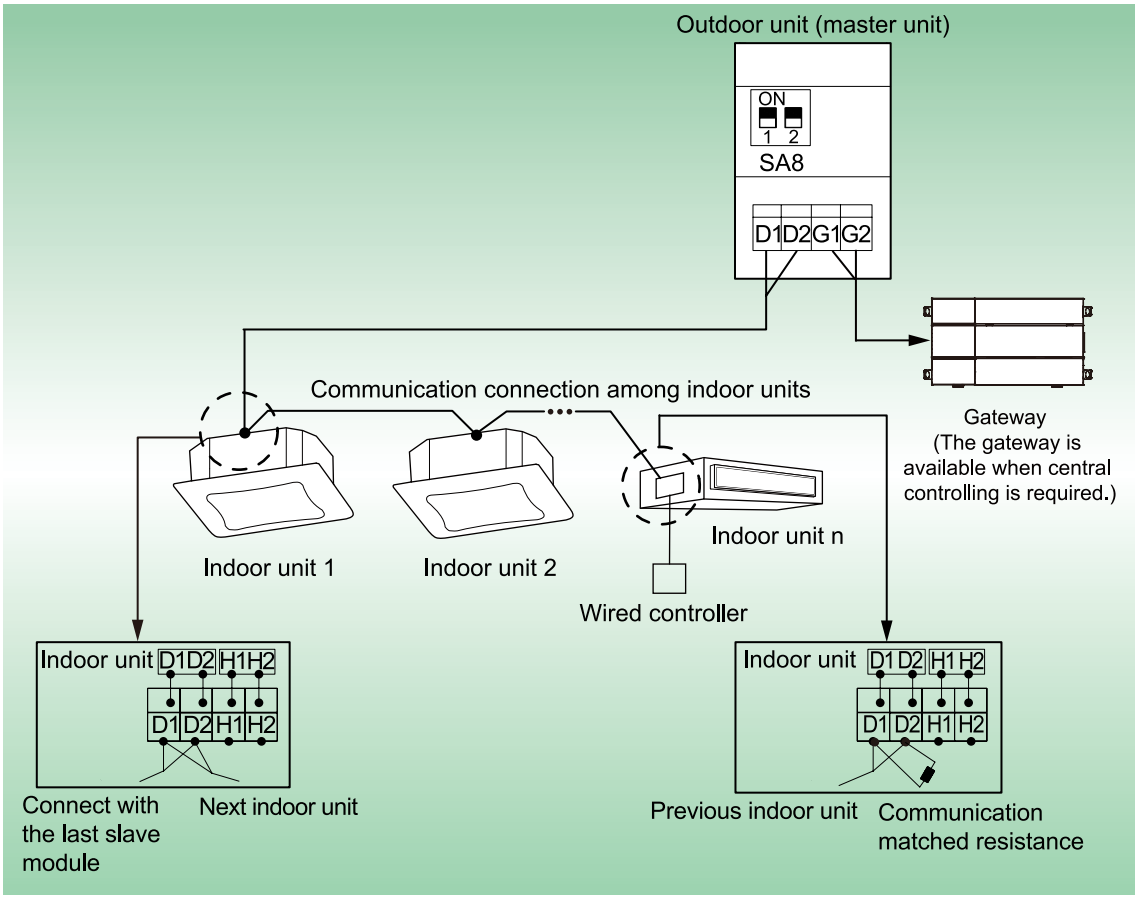

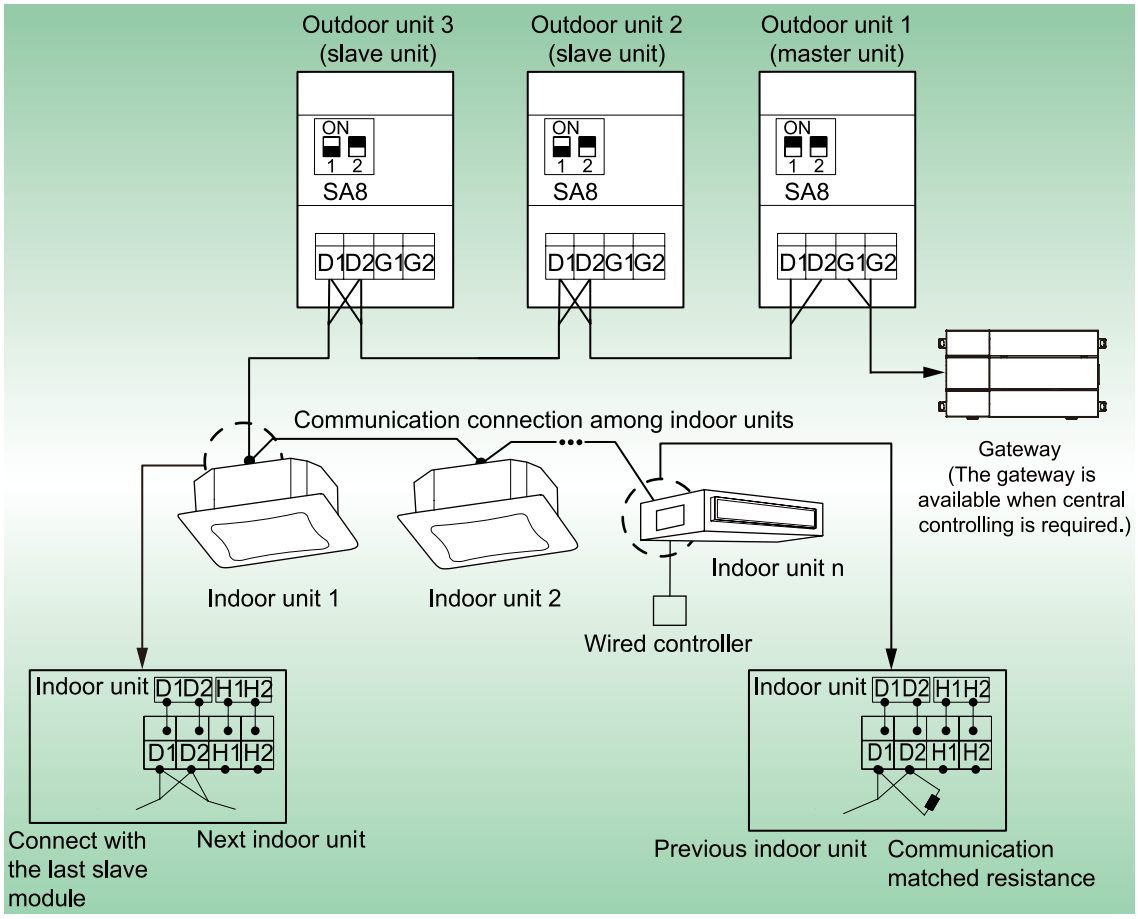

NOTES:

a. If there are several ODU modules, the first set of ODU unit in the communication cord must be the master unit and shall not be connected to IDU (master unit is set by SA8 of ODU main board)

b. If there are several ODU modules, then the IDUs must be connected to the last subordinate ODU (Subordinate unit is set by SA8 of ODU main board).

c. Conduct separate wiring for the communication cord and power cord to avoid interference.

d. The communication cord must be chosen suitable length at the start, and re-connect action after is not allowable.

e. The IDUs must adopt series connection and the last IDU must be connected to the matched resistance (provided in ODU sub-assy list).

f. Wiring method and setting of central controller shall refer to relative manuals.

9.3.2 Communication connection method between IDU and wired controller

There are 4 connection ways between IDU and wired controller, please refer to the following:

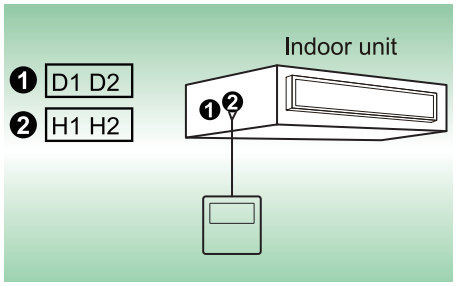

One wired controller controls one IDU

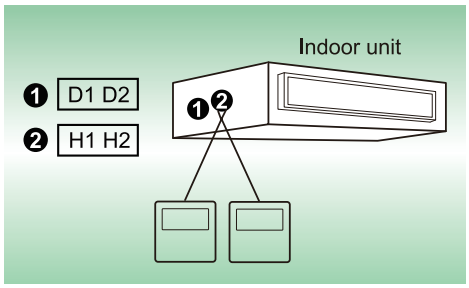

Two wired controllers control one IDU

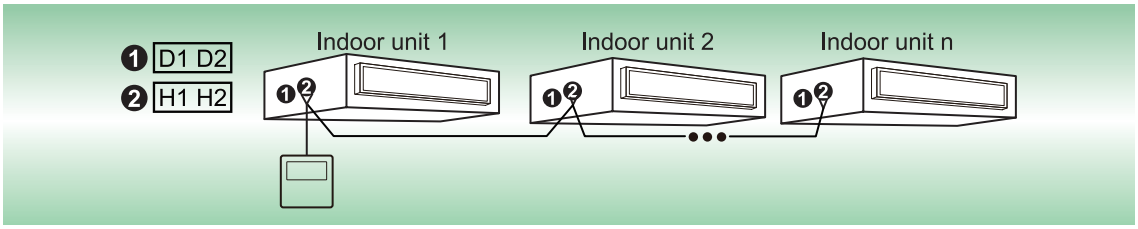

One wired controller control multiple IDUs

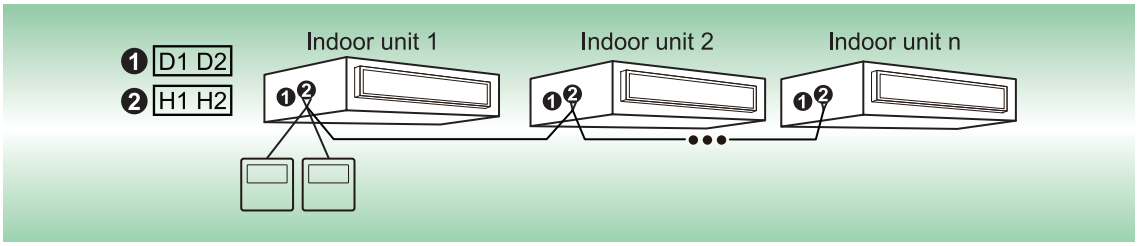

Two wired controllers control multiple IDUs

When two wired controllers control several IDUs at the same time, the wired controller can be connected to any IDU, the connected IDUs shall be the IDU from the same series, meanwhile, set one of the wired controllers as the deputy wired controller and shall be only set one. The amount of IDU controlled by wired controller shall not exceed 16 sets, and the connected IDUs shall be in the same IDU's network.

Set deputy wired controller under ON/OFF status:

Long press "Function" button for 5s of the wired controller which needs to be set as the deputy wired controller, the temperature area will display "C00", then long press "Function" button for 5s to enter parameter setting interface for wired controller, at this time, the temperature area will display "P00" acquiescently.

Press "▲"or"▼" button to select P13 as the parameter code and "Mode" button to switch to parameter value setting. At this time, the parameter value will blink, then press "▲"or"▼" to select "02"code. Press "Confirm/Cancel" button to complete the setting.

Press "Confirm/Cancel" button to return to the previous operation, until existing parameter setting.

Parameter setting list for the user is as follow:

Parameter code	Parameter name	Parameter range	Default value	Remark
P13	Address setting for wired controller	01:Master wired controller 02:Deputy wired controller	01	When two wired controllers control one (or several) set(s) of IDU at the same time, the address of two wired controllers shall be different. Apart from setting the wired controller address, the deputy wired controller can not set unit parameter.

NOTES:

a. All wired controllers are set as master wired controllers at the factory.
b. Under parameter setting status: fan speed, timer, sleep and swing buttons are invalid, press “ON/OFF” button to return to the main interface immediately, but it will not execute the startup/shutdown operation.
c. Under parameter setting status, the signal of remote controller is invalid.

9.3.3 Connection method between duct type IDU and remote signal receiving LED panel

Connection method between duct type IDU and remote signal receiving LED panel.

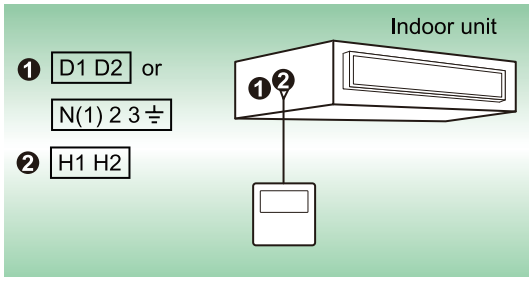

Figure 1 One Receiver Controls One Indoor unit

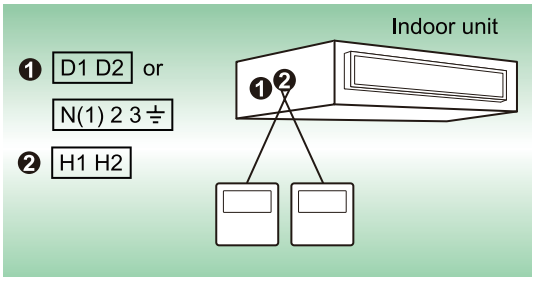

Figure 2 One Receiver and One Wired Controllers Control One Indoor unit

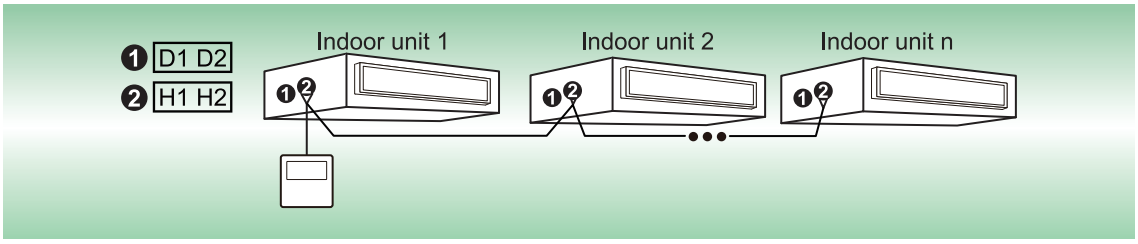

Figure 3 One Receiver Controls Several Multi VRF IDUs Simultaneously

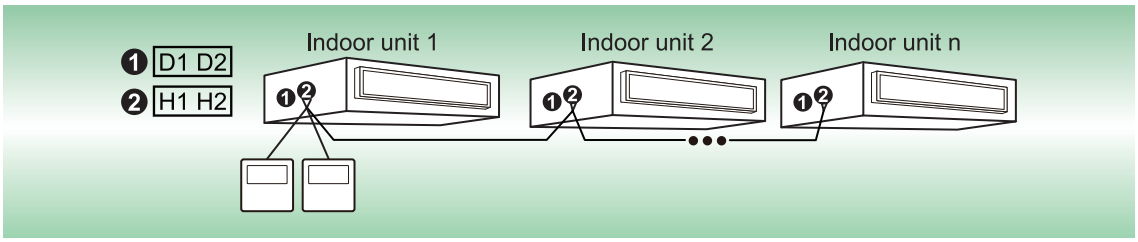

Figure 4 One Receiver and One Wired Controller Control Several Multi VRF IDUs Simultaneously

NOTES:

a. When the remote signal receiving LED panel is connected with multi VRF unit, the wiring methods as shown in Figure 1, Figure 2, Figure 3 and Figure 4 can be adopted, but please pay attention to the follow:
① When one remote signal receiving LED panel or one remote signal receiving LED panel and one wired controller control several indoor units simultaneously, the remote signal receiving LED panel can connect any indoor unit, but the connected indoor unit shall be of the same indoor unit series and the connected indoor unit shall be in the same multi VRF system. When it is applied together with the wired controller, please set the indoor unit quantity of group control in the wired controller.
② When the remote signal receiving LED panel controls several indoor units simultaneously, the settings for all indoor units are the same.
b. In the wiring methods as shown in Figure 2, Figure 4, there can’t be two remote signal receiving

LED panels simultaneously and only one wired controller and one remote signal receiving LED panel are allowable in the same system. The wired controller can be set as master or slave wired controller and the remote signal receiving LED panel address will switch automatically (no need to set remote signal receiving LED panel address manually) according to the wired controller address (master/slave wired controller). The total quantity of remote signal receiving LED panel and wired controller can't exceed two.

c. The remote signal receiving LED panel interface is non-polar, but it can't be connected with heavy current.

d. Wired controller and remote signal receiving LED panel can be used at the same time.

e. When selecting remote signal receiving LED panel, selecting the remote controller at the same time.

10 EXTERNAL ELECTRICAL WIRING DIAGRAM

10.1 External wiring interface

External wiring interface	Power supply	Number of the cable cores	5
		Mark	L1 L2 L3 N PE
	IDU/ODU communication	Number of the cable cores	2
		Mark	D1 D2
	Central control	Number of the cable cores	2
		Mark	G1 G2

10.2 External wiring

Each unit should be equipped with a circuit breaker for short circuit and abnormal overload protection, and ODUs should be equipped with main circuit breaker to turn on or cut off the main power of ODUs. The circuit breaker is normally closed.

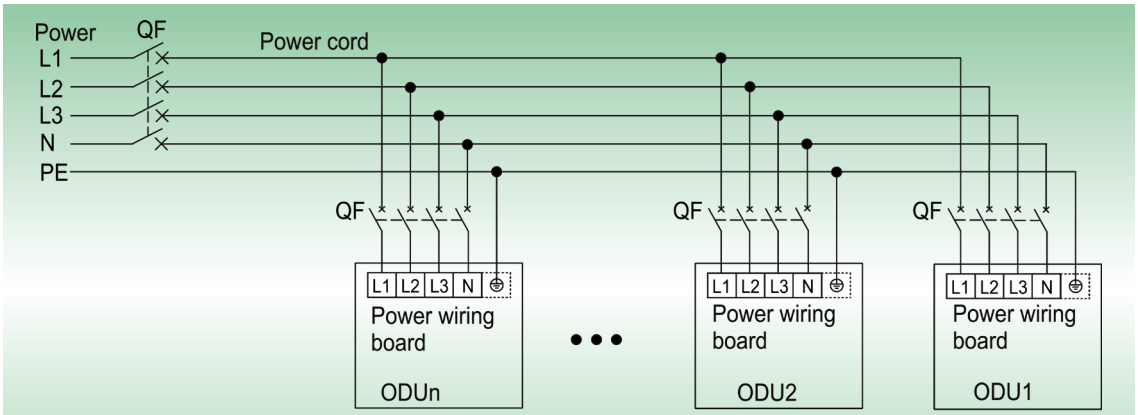

Notes:
The maximum outdoor unit quantity "n" is decided by the combination from of outdoor unit.
Please refer to the actual requirement of unit for the earthing position.

11 CALCULATION OF ADDITIONAL REFRIGERANT CHARGE

Total refrigerant charging amount R= Pipeline's charging amount A + ∑Refrigerant's charging amount for every outdoor module B.

(1) Pipeline's charging amount A:

Pipeline's charging amount A= ∑Liquid pipe length ×Refrigerant's charging amount for every meter liquid pipe.

Diameter of liquid pipe (mm)	Φ28.6	Φ25.4	Φ22.2	Φ19.05	Φ15.9	Φ12.7	Φ9.52	Φ6.35
kg/m	0.680	0.520	0.350	0.250	0.170	0.110	0.054	0.022

(2) Σ Refrigerant charging amount B of every outdoor module B:

Additional charging amount of ODU refrigerant B(kg) ②		ODU capacity(kW)														
IDU/ODU rated capacity connection ratio C ①	Total quantities of IDU	22.4	28	33.5	40	45	50.4	56	61.5	68	73	78.5	85	90	95.2	101
50%≤C≤70%	<4	0	0	0	0	0	0	0	0	0	0	0	0	0	0	0
	≥4	0.5	1	1	1	1	0.5	1	1.5	1.5	2	2	2	2	2	2
70%<C≤90%	<4	0.5	1	1	2	2	1.5	2	2	2	3	3	3	3	3	3
	≥4	1	1	1	2	2	2.5	3	3.5	3.5	4	4	4	4	4	4
90%<C≤105%	<4	1	1	1	2	2	2.5	3	3.5	3.5	5	5	5	5	5	5
	≥4	2	2	2	4	4	4	5	5	5	6	6	6	7	7	7
105%<C≤135%	<4	2	2	2	3	3	3.5	4	4	4	6	6	6	7	7	7
	≥4	3.5	4	4	5	5	5.5	6	6	6	7	7	7	8	8	8

NOTES:

a.[*1]Rated capacity connection ratio of indoor unit and outdoor unit C = sum of indoor unit rated cooling capacity / sum of outdoor unit rated cooling capacity.

b.[*2]If all indoor units are all fresh air indoor units, the added refrigerant amount for each module B is 0kg.

c.If all fresh air indoor units are mixed with the general VRF indoor units, charge the refrigerant according to the refrigerant-charging method of the general indoor unit.

For example1:

Outdoor unit consists of one 28kW module and one 45kW module. Five 14kW duct type units are used as indoor units.

IDU/ODU rated capacity connection ratio C=14×5/(28+45)=96%. The quantities of included IDUs are more than 4 sets. Please refer to the above table.

Additional refrigerant's quantity B for 28kW module is 2.0 kg.

Additional refrigerant's quantity B for 45kw module is 4.0 kg.

So, ∑Refrigerant's charging amount for every module B =2.0+4.0=6.0 kg.

Assume that the pipeline's charging amount A=∑Liquid pipe length × refrigerant's charging amount of every meter liquid pipe=20kg.

Total refrigerant's charging amount R=20+6.0=26kg.

For example 2:

Outdoor unit is a 45kW module and the indoor unit is a 45kW fresh-air unit. The quantity of refrigerant B added to this module is 0kg.

So, ∑Refrigerant's charging amount of every module B = 0kg.

Assume that the pipeline's charging amount A=∑Liquid pipe length × refrigerant's charging amount of every meter liquid pipe = 5.0kg.

Total refrigerant's charging amount R = 5.0+0=5.0kg.
Modular combinations of outdoor units subject to combinations that are currently available.

12 NOTICES

12.1 Safety notices

(1) The unit should not be installed in places with high pH, high voltage fluctuations, such as on vehicles or ships.
(2) Do not touch the fins of the heat exchanger. Improper touch can cause damage.
(3) Do not mix other substances apart from refrigerant in the refrigerant circuit during installing or moving the unit, and do not leave any air in the pipe. If air or other substances are mixed within the pipe, the system pressure will rise, the compressor may burst and damage will occur.
(4) Don't seal the non-specified refrigerant when installing or moving the unit, otherwise, it might cause poor operation, malfunction, mechanical breakdown, etc, or even cause major safety accident.
(5) When moving the unit or repairing the recycled refrigerant, be sure to use the pressure gauge. Conduct the cooling operation first, then completely shut down the valve (liquid valve) at high pressure side. When the pressure gauge displays 0 ～ 0.05MPa, and completely shut down the valve (gas valve) at low pressure side and immediately stop running the unit and cut off the power.
(6) When recovering the refrigerant, please make sure to completely shut down the liquid valve and gas valve, and cut off the power before dismantling the connection pipe; otherwise, there will be air intrusion, and resulting in pressure rise within the system, if the compressor is burst, it will cause damages.
(7) When installing the unit, make sure that the connection pipe is securely connected before starting the compressor. If the compressor is started before the connection pipe is connected and then cut off the valve, there will be air intrusion, resulting in pressure rise within the system, if the compressor is burst, it will cause damages.
(8) Wiring between indoor and outdoor units must be correctly connected with the specified wires, and the wiring terminal shall not be affected by external forces. Poor connection or poor fixing might cause fire accident.
(9) No connection is allowed in the middle of the wire. When the length of the connecting wire is not enough, please contact the designated service store to re-equip a specific wire of sufficient length.

12.2 Notices for the usage of refrigerant

(1) AC project designers and installers shall obey the local laws and regulations on the safety requirement of the usage and leakage of refrigerant.
(2) The multi VRF unit adopts R410A refrigerant. When installing in the space with people, the refrigerant amount shall not exceed the max.allowable concentration. Otherwise, suffocation will occur. For example, the max.allowable concentration for refrigerant of European safety standard and regulation is 0.44kg/m^3.
Max. refrigerant charge(kg)= Room volume(m^3)× max. allowable concentration(kg/m^3)
Refrigerant charge(kg)= Adding quantity of refrigerant(kg)+ ∑ex-factory charge of ODU(kg)
Refrigerant charge ≤ Max. refrigerant charge
(3) When refrigerant charge has exceeded the max.refrigerant charge, re-design the refrigeration system and divide the refrigeration system to several refrigeration systems of small volume, or add corresponding ventilation measures and alarms.

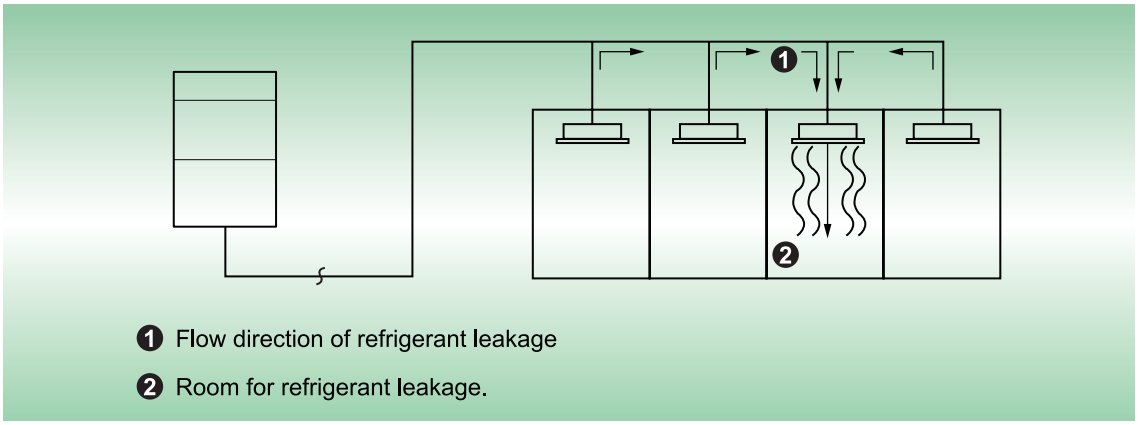

13 OPTIONAL ACCESSORIES

—		Model	Remarks
Branch	Outdoor unit	ML01/A,ML02/A	—
	Indoor unit	FQ01A/A,FQ01B/A,FQ02/A,FQ03/A,FQ04/A,FQ05/A	—
Remote controller		YAP1F	Optional: Duct type indoor units Standard: Wall-mounted, cassette and floor-ceiling indoor units
Classic wired controller		Wired controller XK46	Optional: Cassette, floor ceiling and wall-mounted indoor units Standard: Duct and concealed floor standing indoor units
Wired controller		XE7A-24/H	—
Wired controller		XE7A-24/HC	With WiFi function
Wired controller		XE70-33/H	—
Linkage controller		LE60-24/H1	With access control and dry contact signals detection function
Centralized controller		CE52-24/F(C)	—
E-Smart Zone controller		CE54-24/F(C)	—
Debugger		CE42-24/F(C)	—
Debugging software		DE40-33/A(C)	—
Remote monitoring system	Software	FE30-24/DF(B)	—
	Controller	ME20-24/D1(T)	
Remote receiving LED panel		JS13	—
VRF Protocol Gateway		ME30-24/D1(BM)	Gateway capacity: 255 indoor units; it can output two kinds of BMS data: ModBus/BACnet
Modbus Gateway(Mini)		ME30-24/E6(M)	Gateway capacity: 128 indoor units (within 16 systems)
H2M Gateway		ME31-33/EH1(M)	Gateway capacity: a indoor unit (similar with the wired controller; it can control multiple units), it can output ModBus data

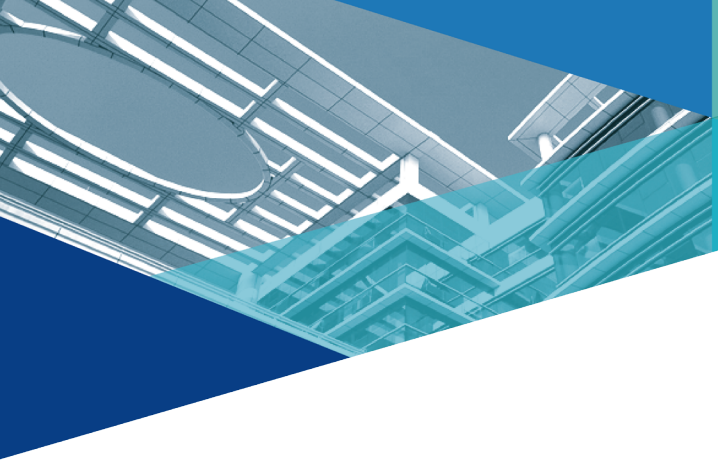

GREE ELECTRIC APPLIANCES, INC. OF ZHUHAI 519070

Add: West Jinji Rd,Qianshan Zhuhai,Guangdong,China
Tel: (+86-756)8522218
Fax: (+86-756)8669426
E-mail: gree@cn.gree.com www.gree.com

SJ00612294